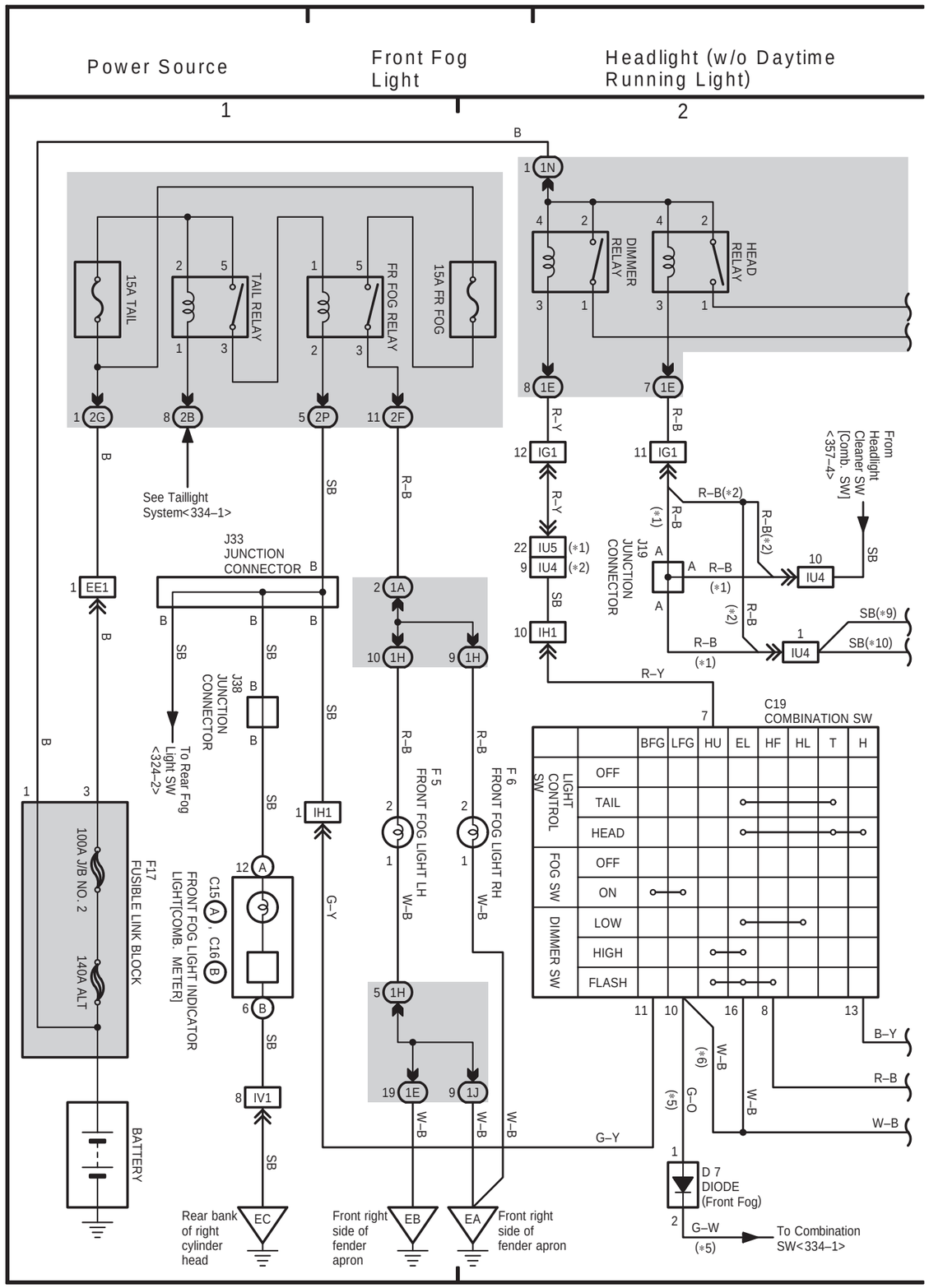
Power Source
Front Fog Light
Headlight (w/o Daytime Running Light)
1
2
15A TAIL
TAIL RELAY
FR FOG RELAY
15A FR FOG
DIMMER RELAY
HEAD RELAY
See Taillight System<334–1>
J33 JUNCTION CONNECTOR
J38 JUNCTION CONNECTOR
To Rear Fog Light SW <324–2>
J19 JUNCTION CONNECTOR
From Headlight Cleaner SW [Comb. SW] <357–4>
C19 COMBINATION SW
BFG LFG HU EL HF HL T H
LIGHT CONTROL SW
OFF
TAIL
HEAD
FOG SW
OFF
ON
DIMMER SW
LOW
HIGH
FLASH
F 5 FRONT FOG LIGHT LH
F 6 FRONT FOG LIGHT RH
C15 A , C16 B
FRONT FOG LIGHT INDICATOR LIGHT[COMB. METER]
F17 FUSIBLE LINK BLOCK
100A J/B NO. 2
140A ALT
BATTERY
D 7 DIODE (Front Fog)
To Combination SW<334–1>
Rear bank of right cylinder head
Front right side of fender apron
Front right side of fender apron

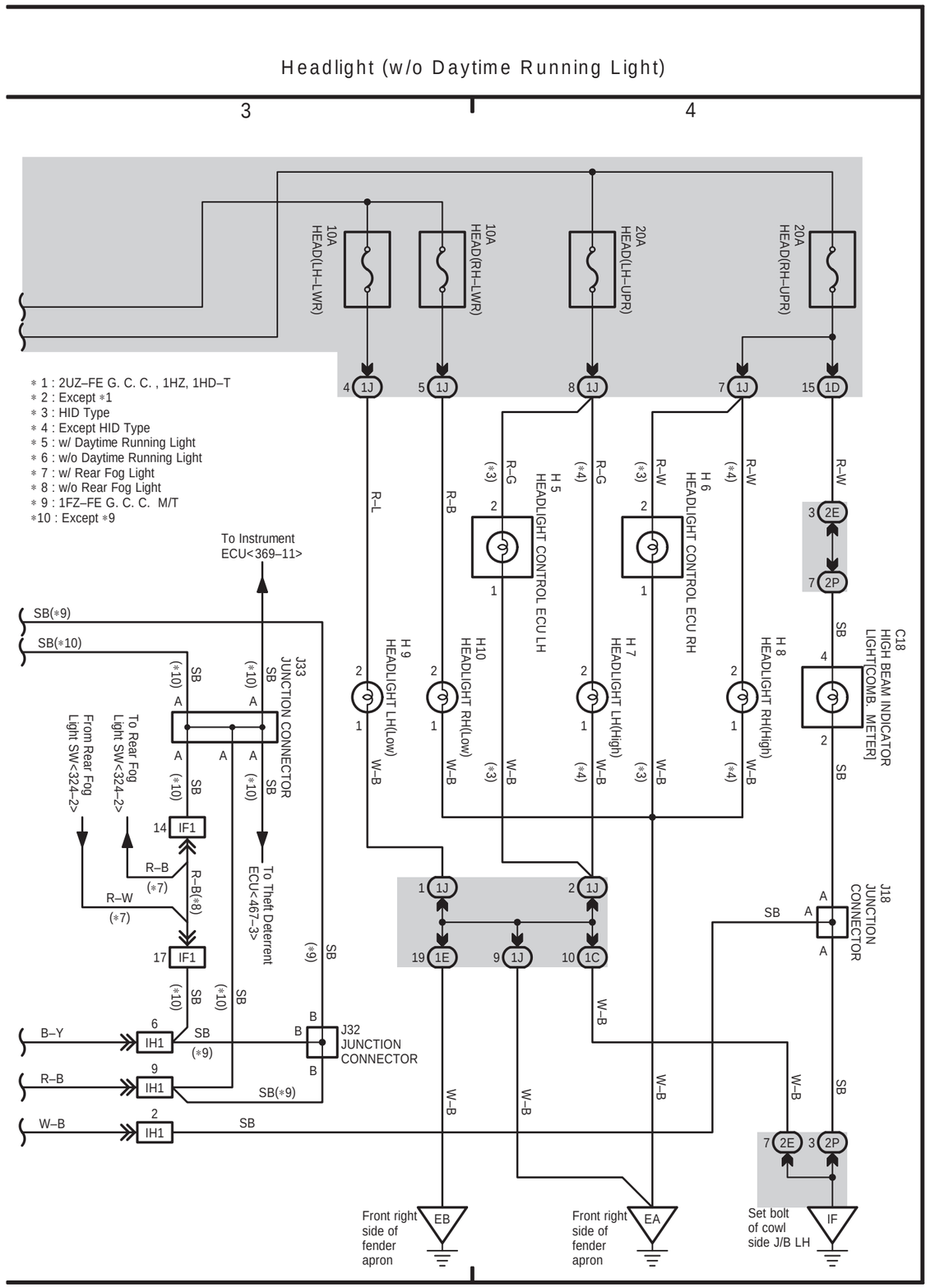
Headlight (w/o Daytime Running Light)
3
4
10A HEAD(LH–LWR)
10A HEAD(RH–LWR)
20A HEAD(LH–UPR)
20A HEAD(RH–UPR)
∗ 1 : 2UZ–FE G. C. C. , 1HZ, 1HD–T
∗ 2 : Except ∗1
∗ 3 : HID Type
∗ 4 : Except HID Type
∗ 5 : w/ Daytime Running Light
∗ 6 : w/o Daytime Running Light
∗ 7 : w/ Rear Fog Light
∗ 8 : w/o Rear Fog Light
∗ 9 : 1FZ–FE G. C. C. M/T
∗10 : Except ∗9
To Instrument ECU<369–11>
H 5 HEADLIGHT CONTROL ECU LH
H 6 HEADLIGHT CONTROL ECU RH
H 9 HEADLIGHT LH(Low)
H10 HEADLIGHT RH(Low)
H 7 HEADLIGHT LH(High)
H 8 HEADLIGHT RH(High)
C18 HIGH BEAM INDICATOR LIGHT[COMB. METER]
J33 JUNCTION CONNECTOR
From Rear Fog Light SW<324–2>
To Rear Fog Light SW<324–2>
To Theft Deterrent ECU<467–3>
J32 JUNCTION CONNECTOR
J18 JUNCTION CONNECTOR
Front right side of fender apron
Front right side of fender apron
Set bolt of cowl side J/B LH

LHD

LHD