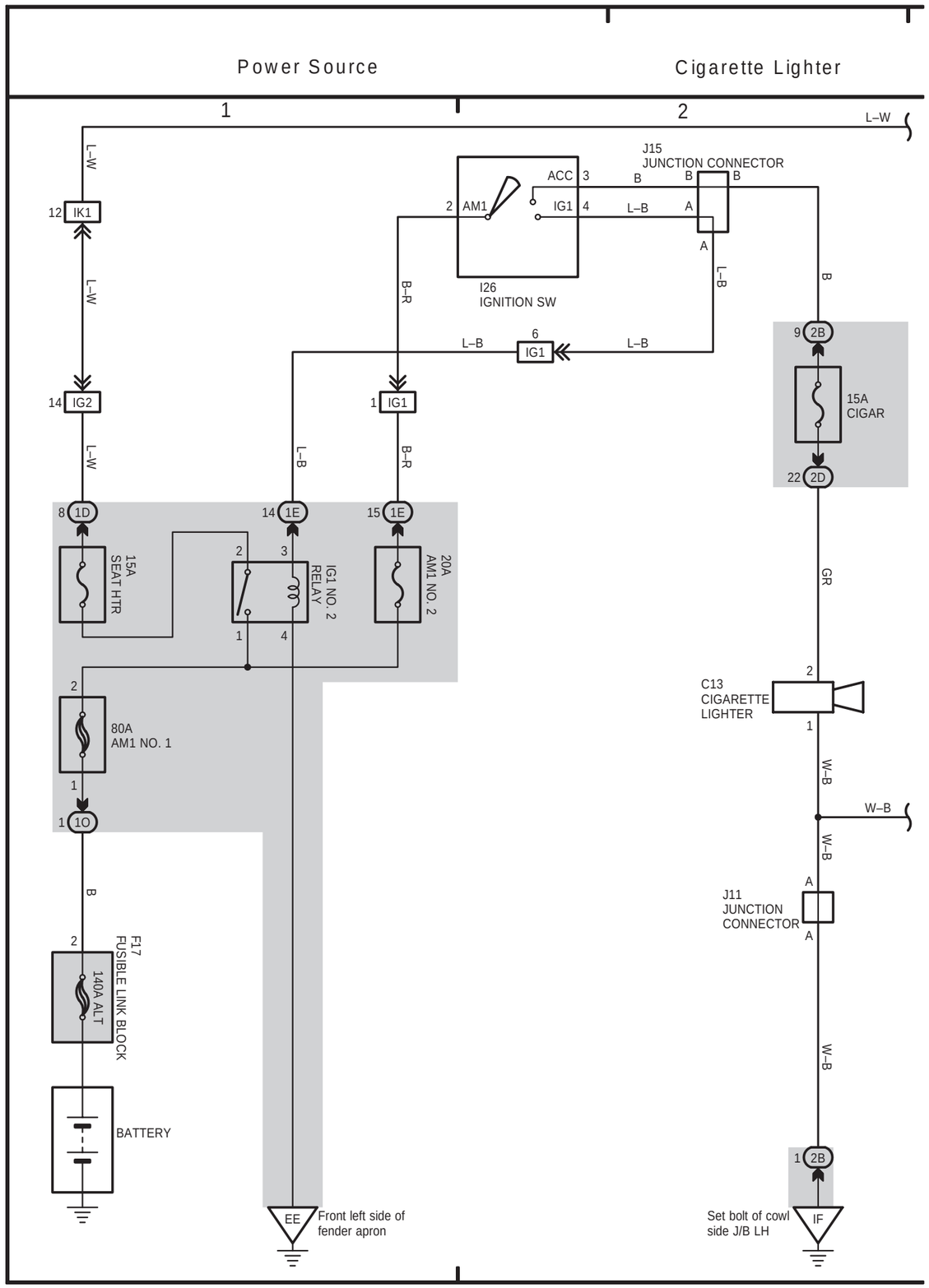
Power Source
Cigarette Lighter
1
2
L–W
12 IK1
14 IG2
J15
JUNCTION CONNECTOR
ACC 3
2 AM1
IG1 4
L–B
I26
IGNITION SW
B–R
6 IG1
1 IG1
9 2B
15A
CIGAR
22 2D
8 1D
14 1E
15 1E
15A
SEAT HTR
IG1 NO. 2
RELAY
20A
AM1 NO. 2
80A
AM1 NO. 1
1 1O
F17
FUSIBLE LINK BLOCK
140A ALT
BATTERY
EE
Front left side of
fender apron
C13
CIGARETTE
LIGHTER
W–B
J11
JUNCTION
CONNECTOR
GR
1 2B
Set bolt of cowl
side J/B LH
IF

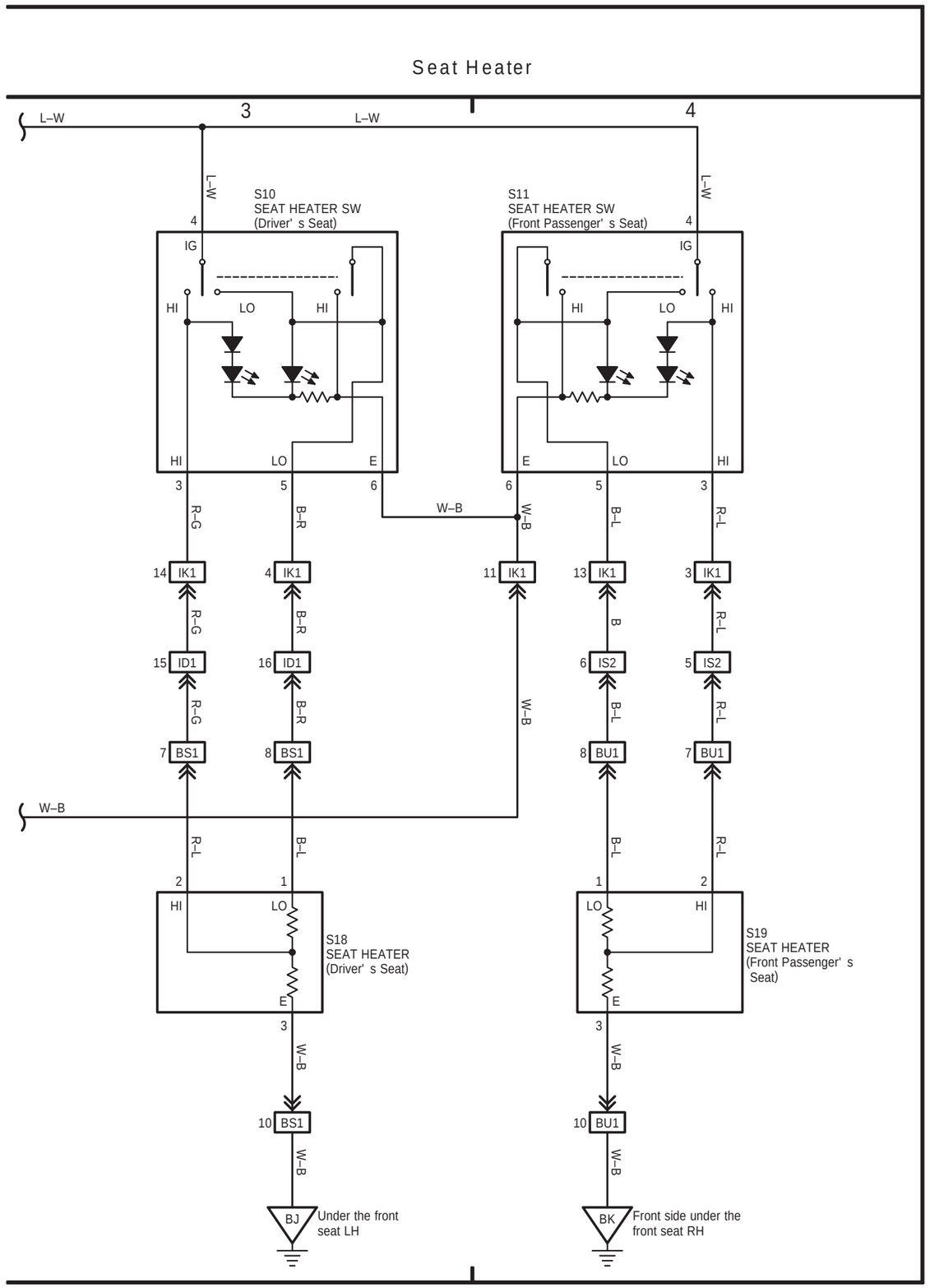
Seat Heater
3
4
L–W
S10
SEAT HEATER SW
(Driver' s Seat)
S11
SEAT HEATER SW
(Front Passenger' s Seat)
IG
HI
LO
E
W–B
R–G
B–R
B–L
R–L
B
14 IK1
4 IK1
11 IK1
13 IK1
3 IK1
15 ID1
16 ID1
6 IS2
5 IS2
7 BS1
8 BS1
8 BU1
7 BU1
S18
SEAT HEATER
(Driver' s Seat)
S19
SEAT HEATER
(Front Passenger' s
Seat)
10 BS1
10 BU1
BJ
Under the front
seat LH
BK
Front side under the
front seat RH

LHD