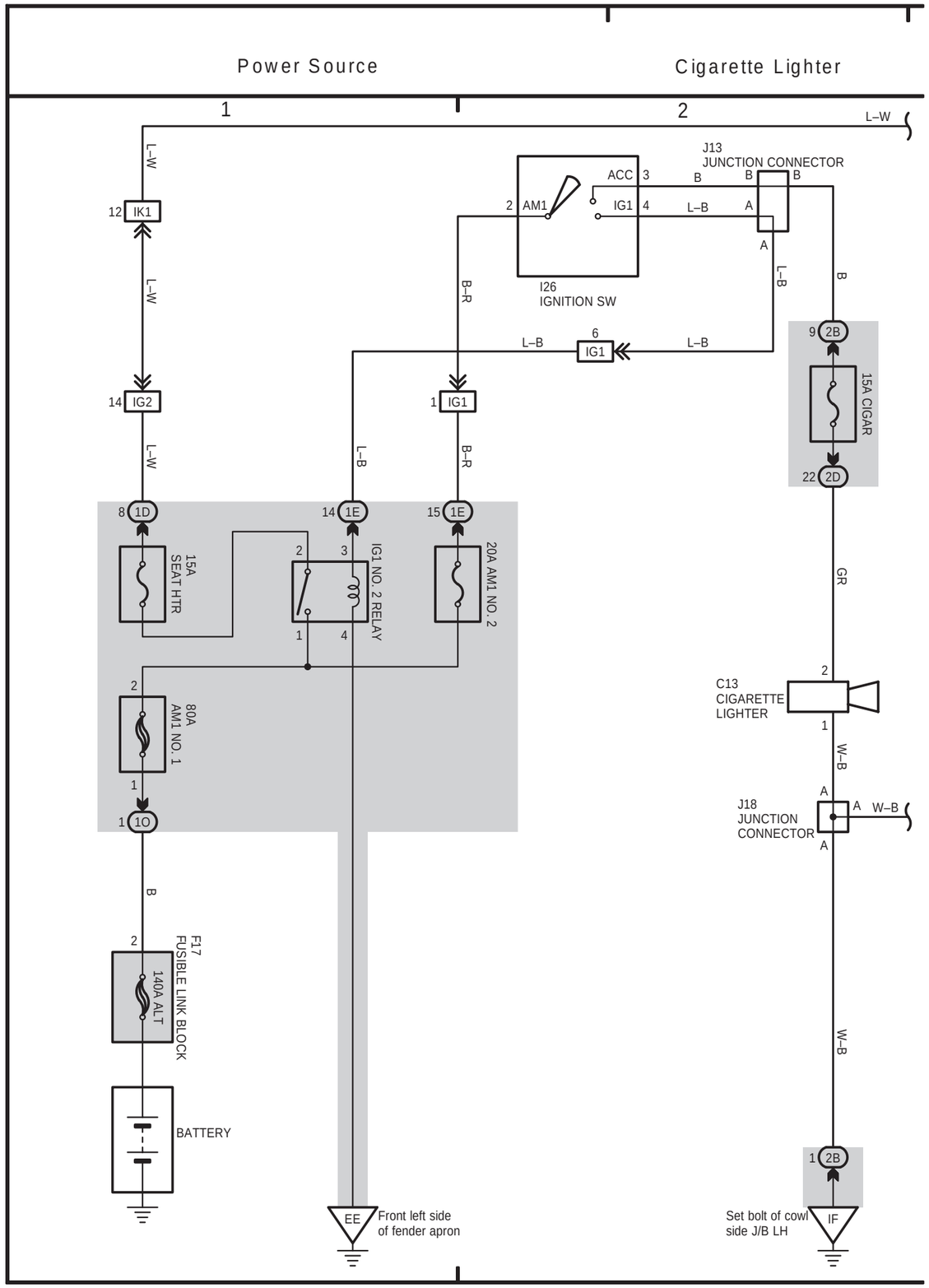

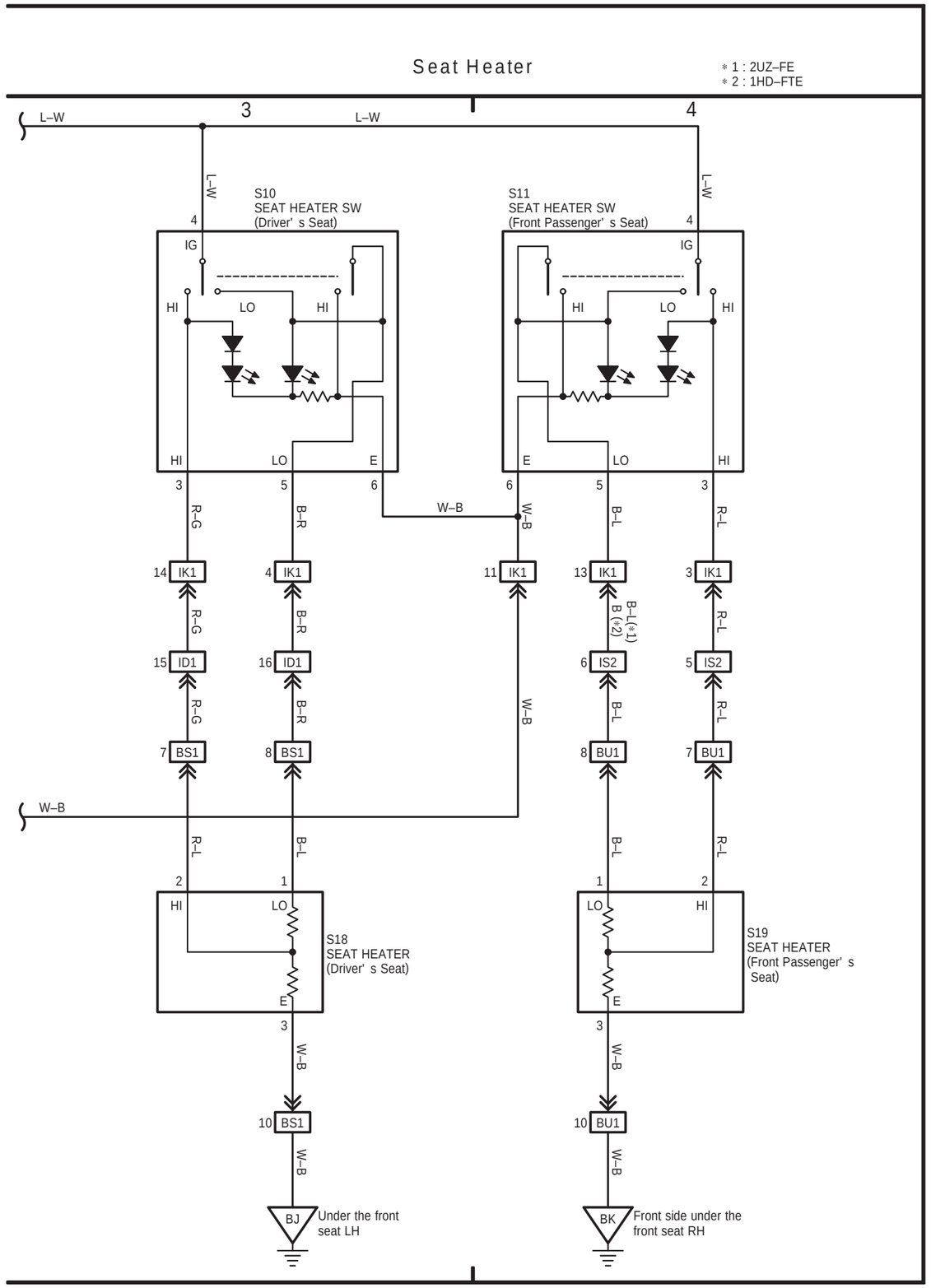

LAND CRUISER Station Wagon (EWD342F)

RHD

RHD