AC1RN–01

# LOCATION

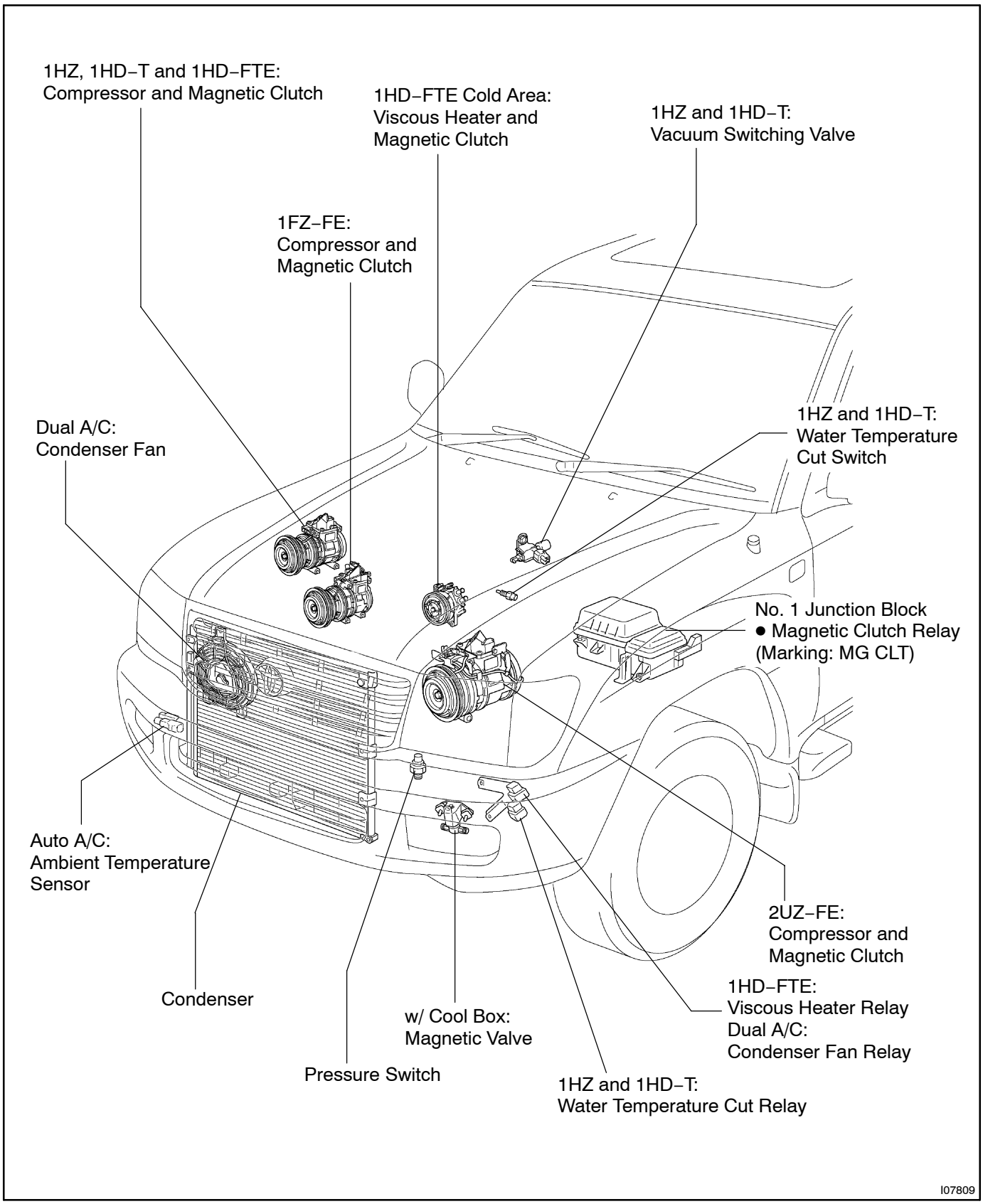

**LHD Models:**

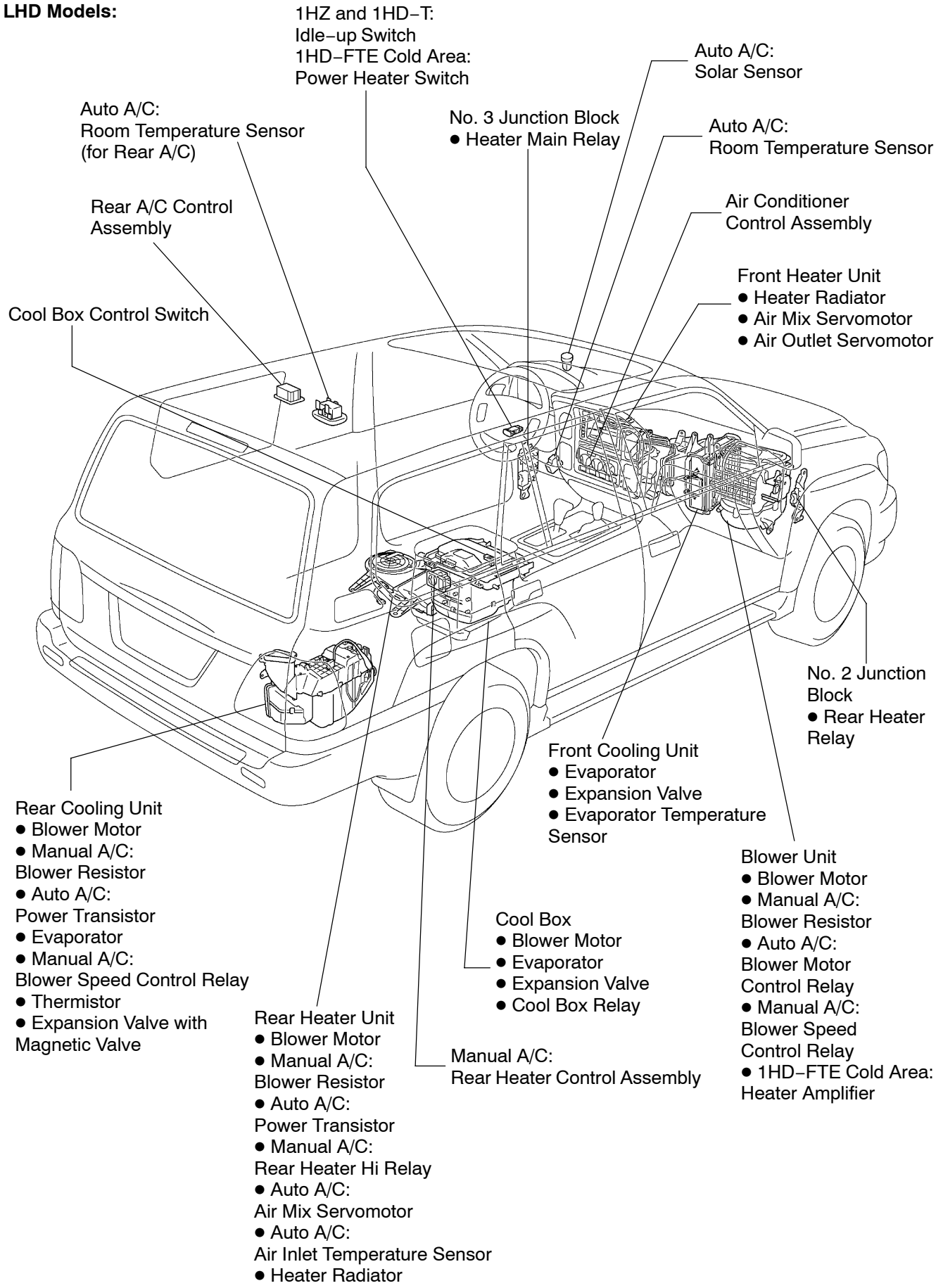
1HZ and 1HD–T:
Idle–up Switch
1HD–FTE Cold Area:
Power Heater Switch
Auto A/C:
Solar Sensor
Auto A/C:
Room Temperature Sensor
(for Rear A/C)
No. 3 Junction Block
● Heater Main Relay
Auto A/C:
Room Temperature Sensor
Rear A/C Control
Assembly
Air Conditioner
Control Assembly
Front Heater Unit
● Heater Radiator
● Air Mix Servomotor
● Air Outlet Servomotor
Cool Box Control Switch
No. 2 Junction
Block
● Rear Heater
Relay
Front Cooling Unit
● Evaporator
● Expansion Valve
● Evaporator Temperature
Sensor
Rear Cooling Unit
● Blower Motor
● Manual A/C:
Blower Resistor
● Auto A/C:
Power Transistor
● Evaporator
● Manual A/C:
Blower Speed Control Relay
● Thermistor
● Expansion Valve with
Magnetic Valve
Blower Unit
● Blower Motor
● Manual A/C:
Blower Resistor
● Auto A/C:
Blower Motor
Control Relay
● Manual A/C:
Blower Speed
Control Relay
● 1HD–FTE Cold Area:
Heater Amplifier
Cool Box
● Blower Motor
● Evaporator
● Expansion Valve
● Cool Box Relay
Rear Heater Unit
● Blower Motor
● Manual A/C:
Blower Resistor
● Auto A/C:
Power Transistor
● Manual A/C:
Rear Heater Hi Relay
● Auto A/C:
Air Mix Servomotor
● Auto A/C:
Air Inlet Temperature Sensor
● Heater Radiator
Manual A/C:
Rear Heater Control Assembly
I07888

**RHD Models:**

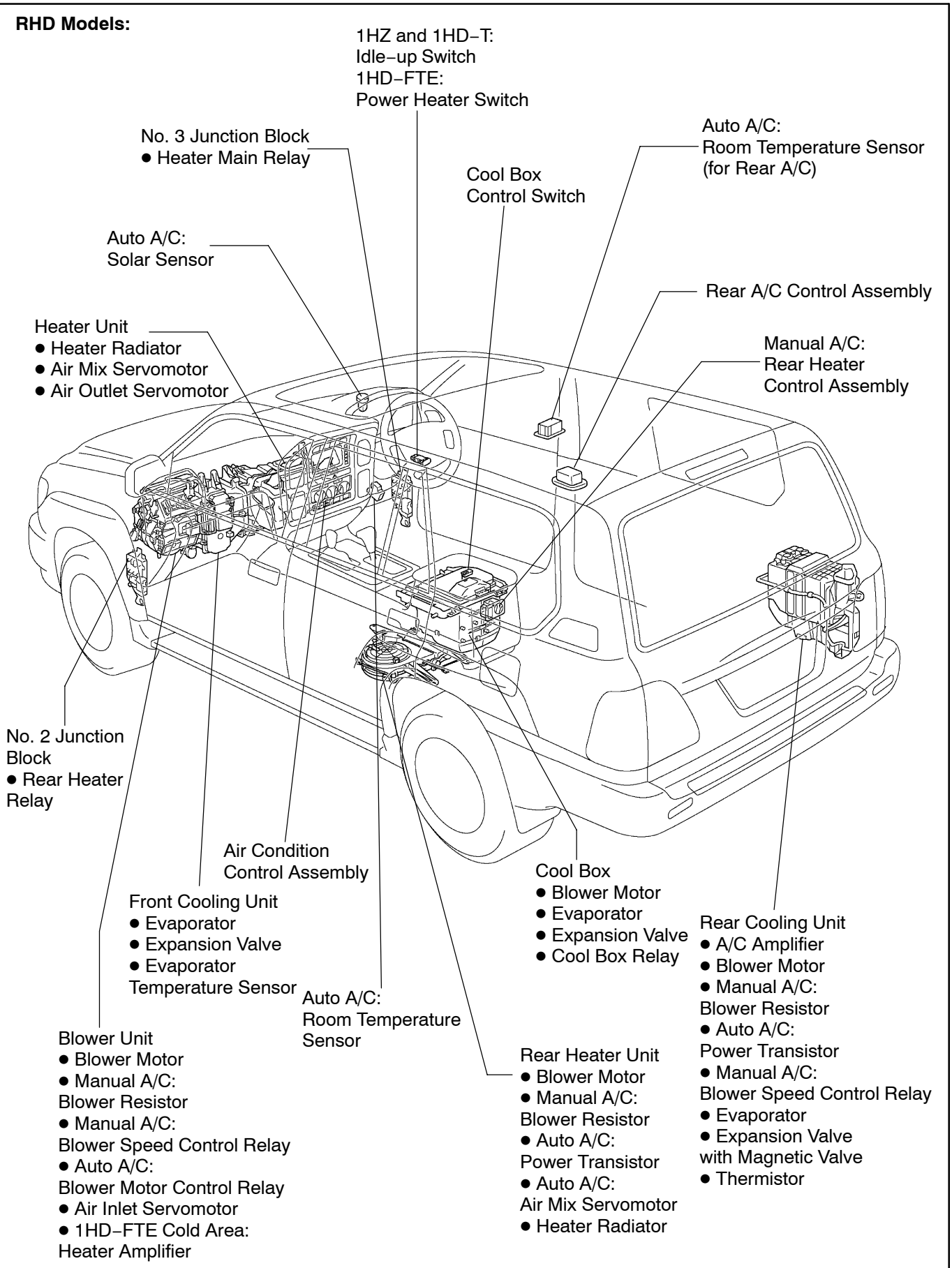
1HZ and 1HD–T:
Idle–up Switch
1HD–FTE:
Power Heater Switch
No. 3 Junction Block
● Heater Main Relay
Auto A/C:
Room Temperature Sensor
(for Rear A/C)
Cool Box
Control Switch
Auto A/C:
Solar Sensor
Rear A/C Control Assembly
Heater Unit
● Heater Radiator
● Air Mix Servomotor
● Air Outlet Servomotor
Manual A/C:
Rear Heater
Control Assembly
No. 2 Junction
Block
● Rear Heater
Relay
Air Condition
Control Assembly
Front Cooling Unit
● Evaporator
● Expansion Valve
● Evaporator
Temperature Sensor
Cool Box
● Blower Motor
● Evaporator
● Expansion Valve
● Cool Box Relay
Rear Cooling Unit
● A/C Amplifier
● Blower Motor
● Manual A/C:
Blower Resistor
● Auto A/C:
Power Transistor
● Manual A/C:
Blower Speed Control Relay
● Evaporator
● Expansion Valve
with Magnetic Valve
● Thermistor
Auto A/C:
Room Temperature
Sensor
Blower Unit
● Blower Motor
● Manual A/C:
Blower Resistor
● Manual A/C:
Blower Speed Control Relay
● Auto A/C:
Blower Motor Control Relay
● Air Inlet Servomotor
● 1HD–FTE Cold Area:
Heater Amplifier
Rear Heater Unit
● Blower Motor
● Manual A/C:
Blower Resistor
● Auto A/C:
Power Transistor
● Auto A/C:
Air Mix Servomotor
● Heater Radiator
I07889