1 LAND CRUISER ELECTRICAL WIRING DIAGRAM

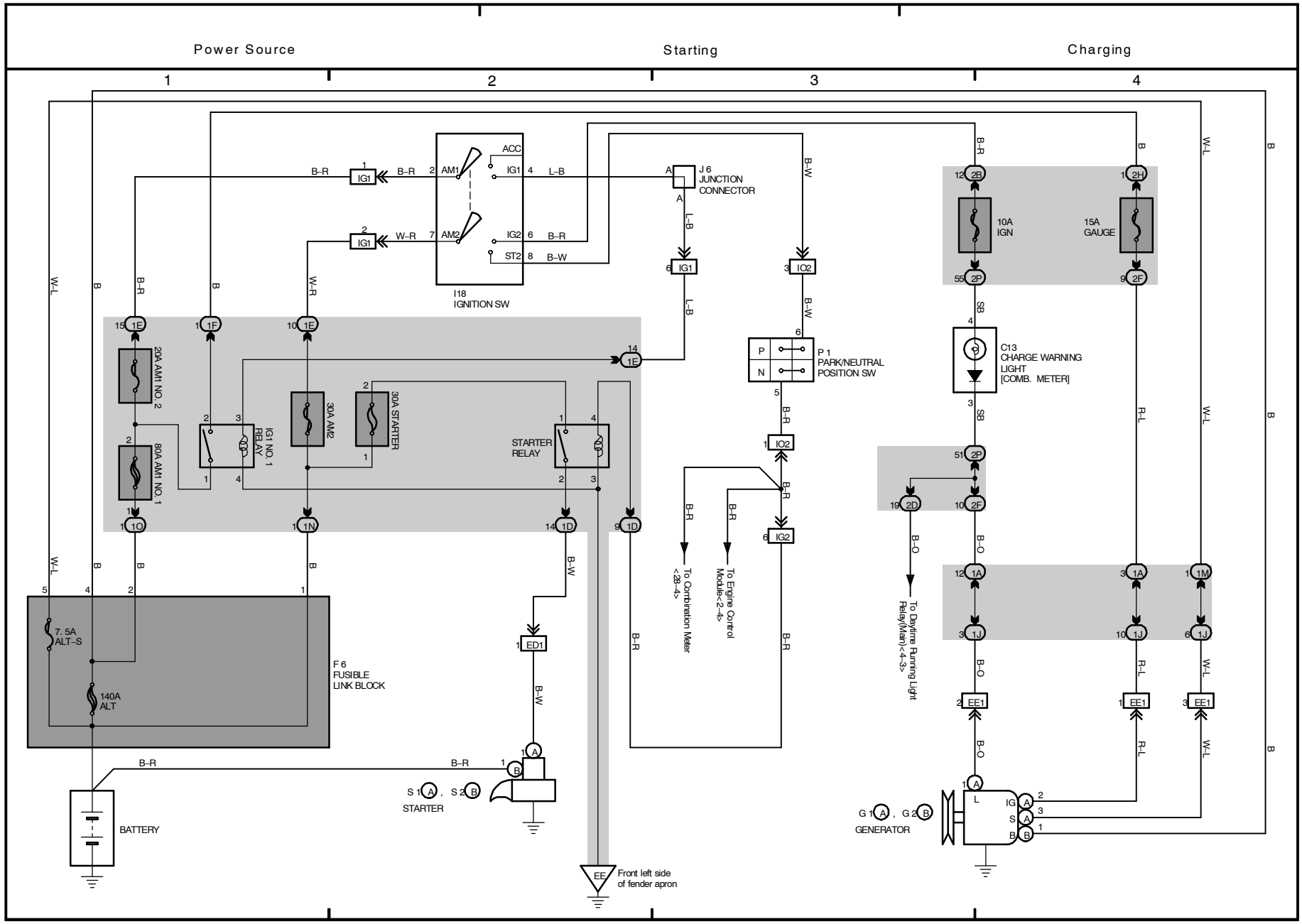

2 LAND CRUISER

(Cont. next page)

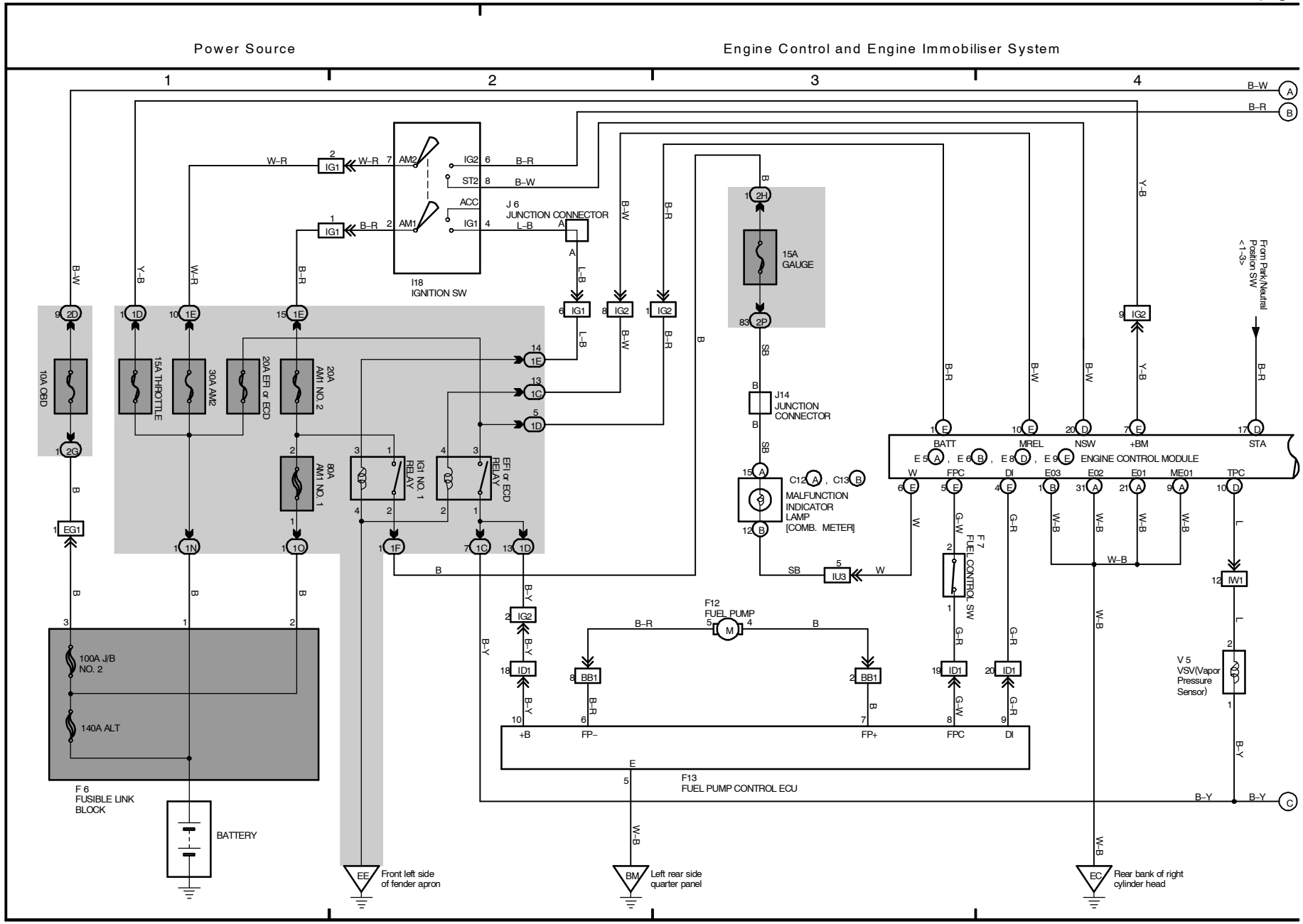

(Cont. next page)

Engine Control and Engine Immobiliser System

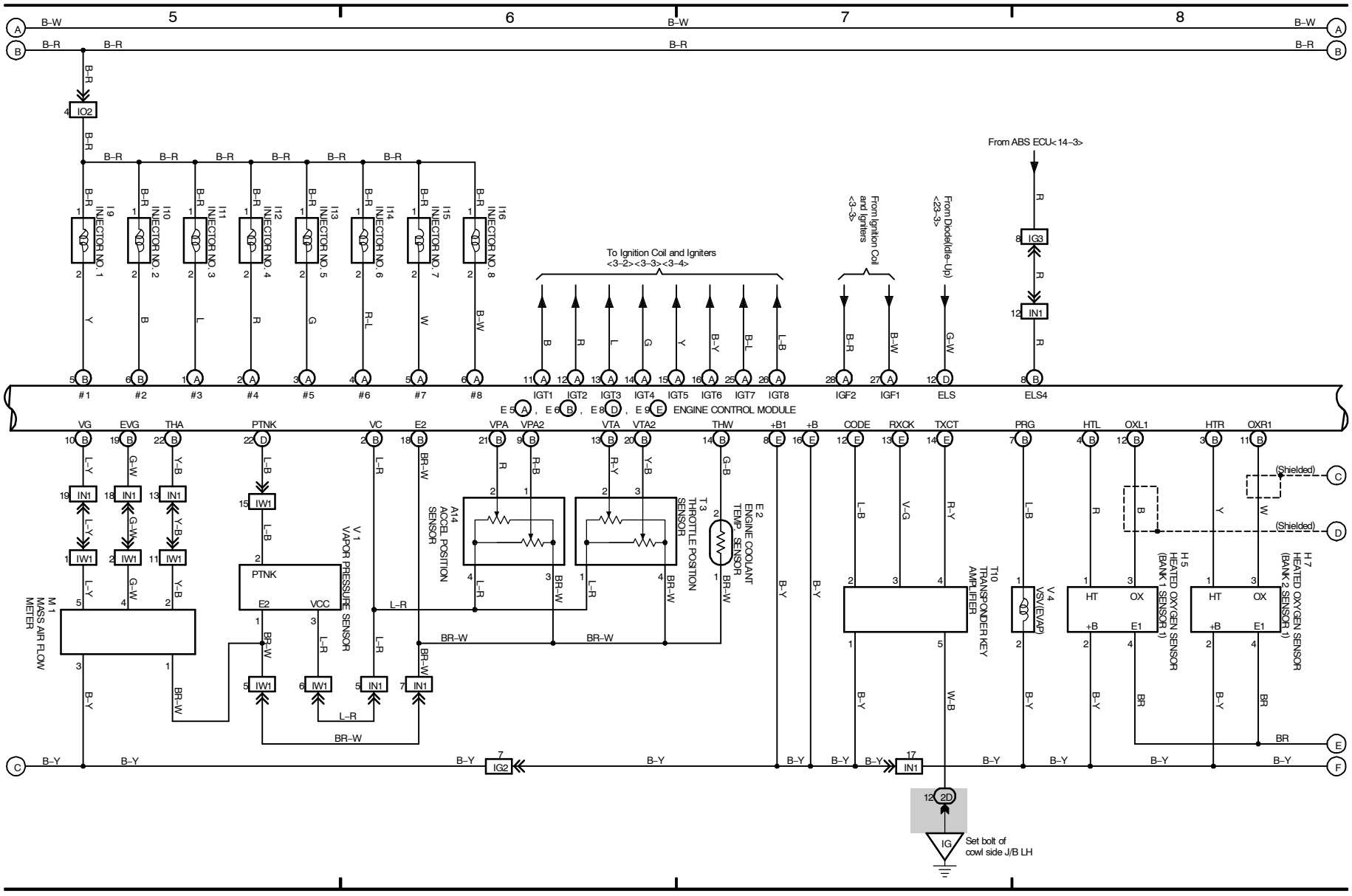

2 LAND CRUISER (Cont' d)

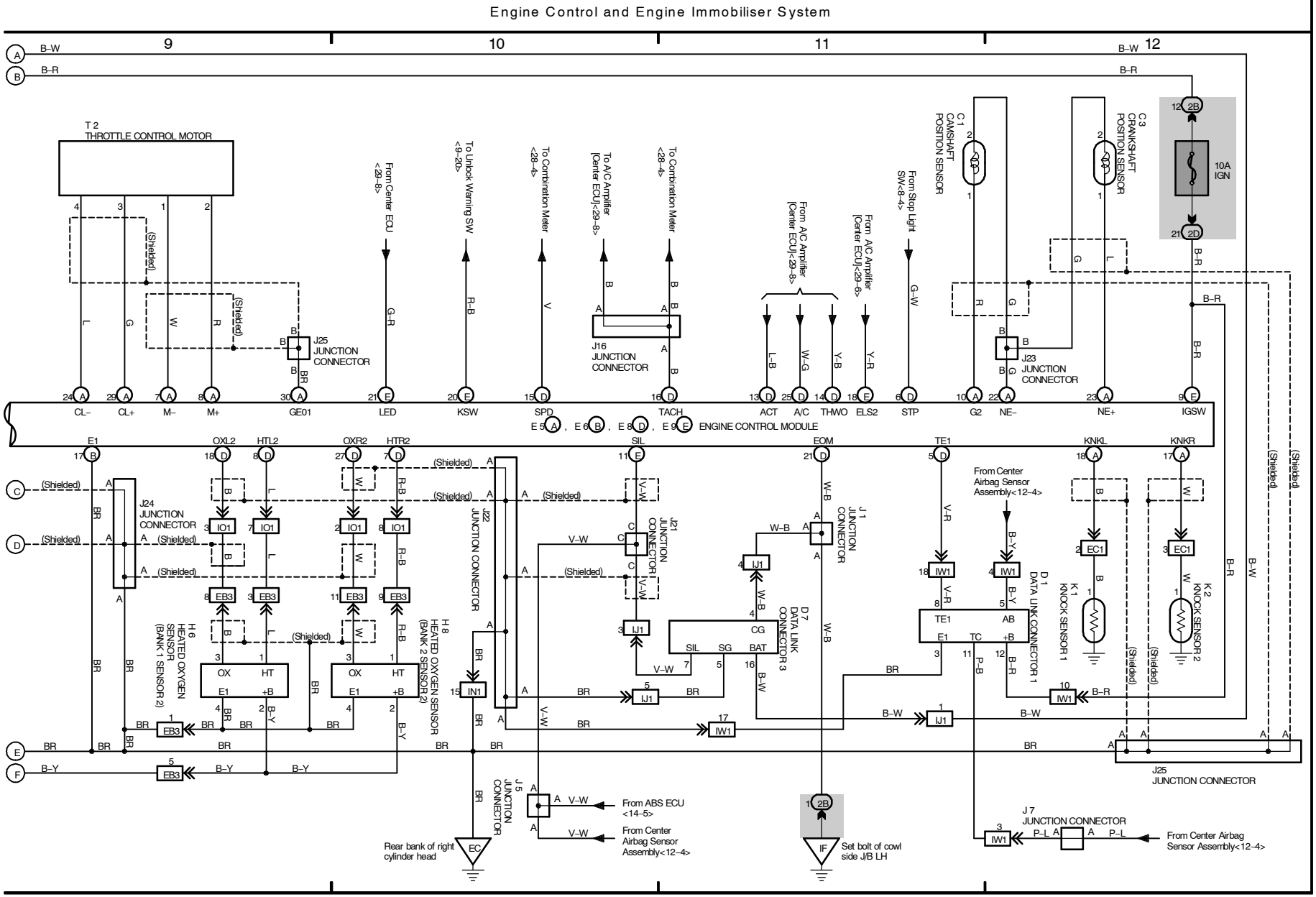

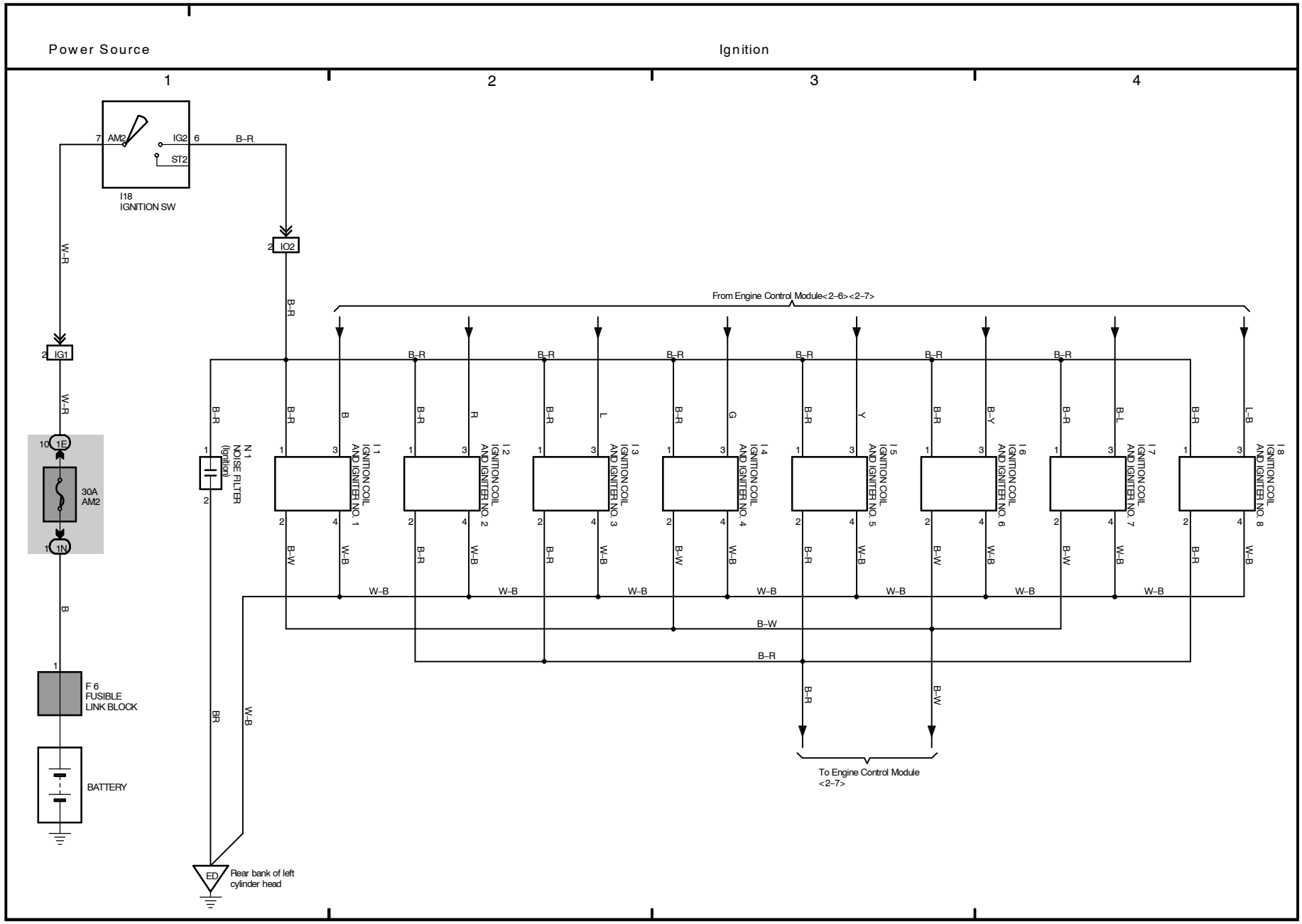
Power Source
Ignition
1
2
3
4
I18
IGNITION SW
AM2
IG2
ST2
IO2
IG1
1E
1N
30A
AM2
F 6
FUSIBLE
LINK BLOCK
BATTERY
N 1
NOISE FILTER
(Ignition)
ED
Rear bank of left
cylinder head
From Engine Control Module<2-6><2-7>
To Engine Control Module
<2-7>
I 1
IGNITION COIL
AND IGNITER NO. 1
I 2
IGNITION COIL
AND IGNITER NO. 2
I 3
IGNITION COIL
AND IGNITER NO. 3
I 4
IGNITION COIL
AND IGNITER NO. 4
I 5
IGNITION COIL
AND IGNITER NO. 5
I 6
IGNITION COIL
AND IGNITER NO. 6
I 7
IGNITION COIL
AND IGNITER NO. 7
I 8
IGNITION COIL
AND IGNITER NO. 8

4 LAND CRUISER

(Cont. next page)

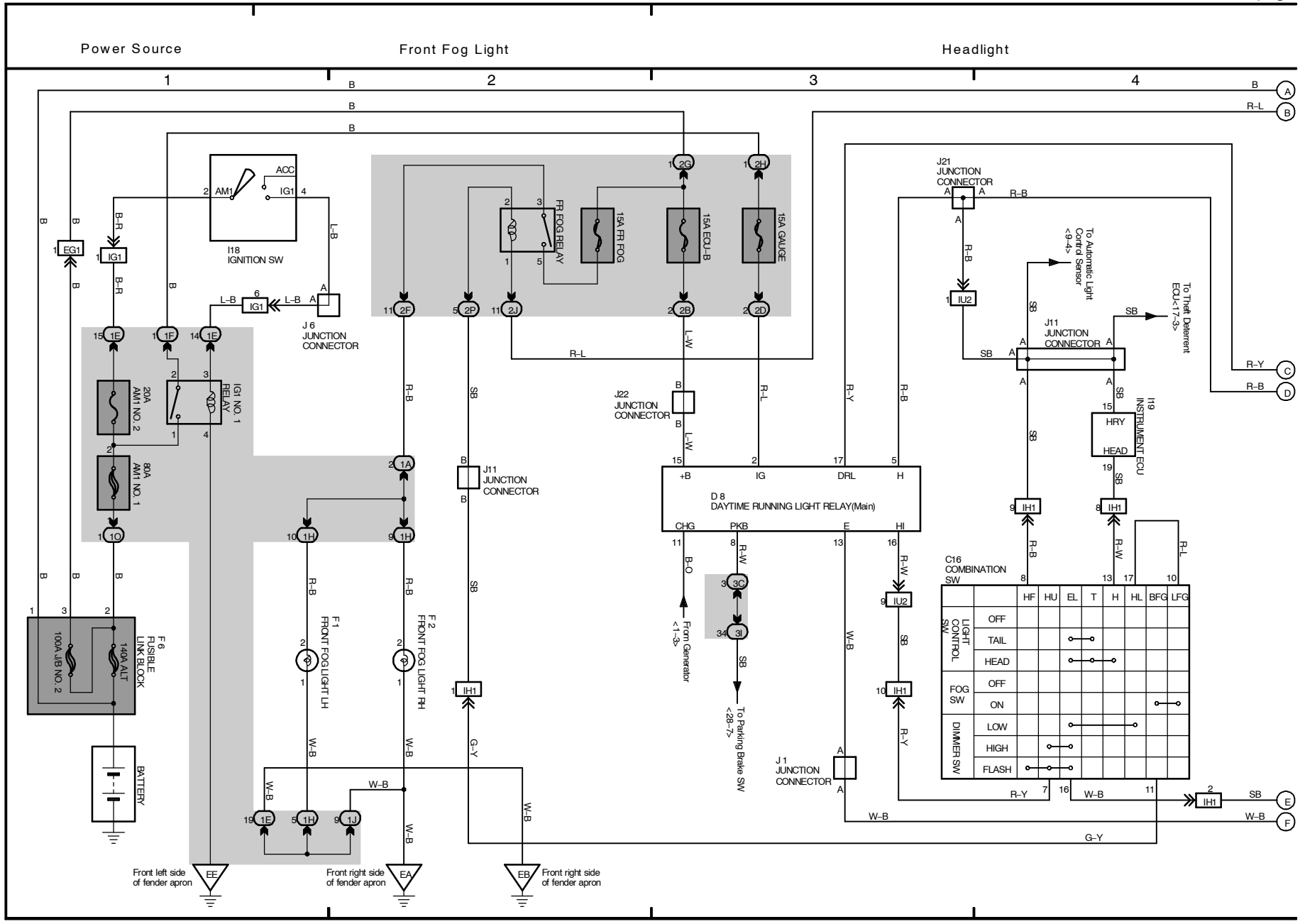

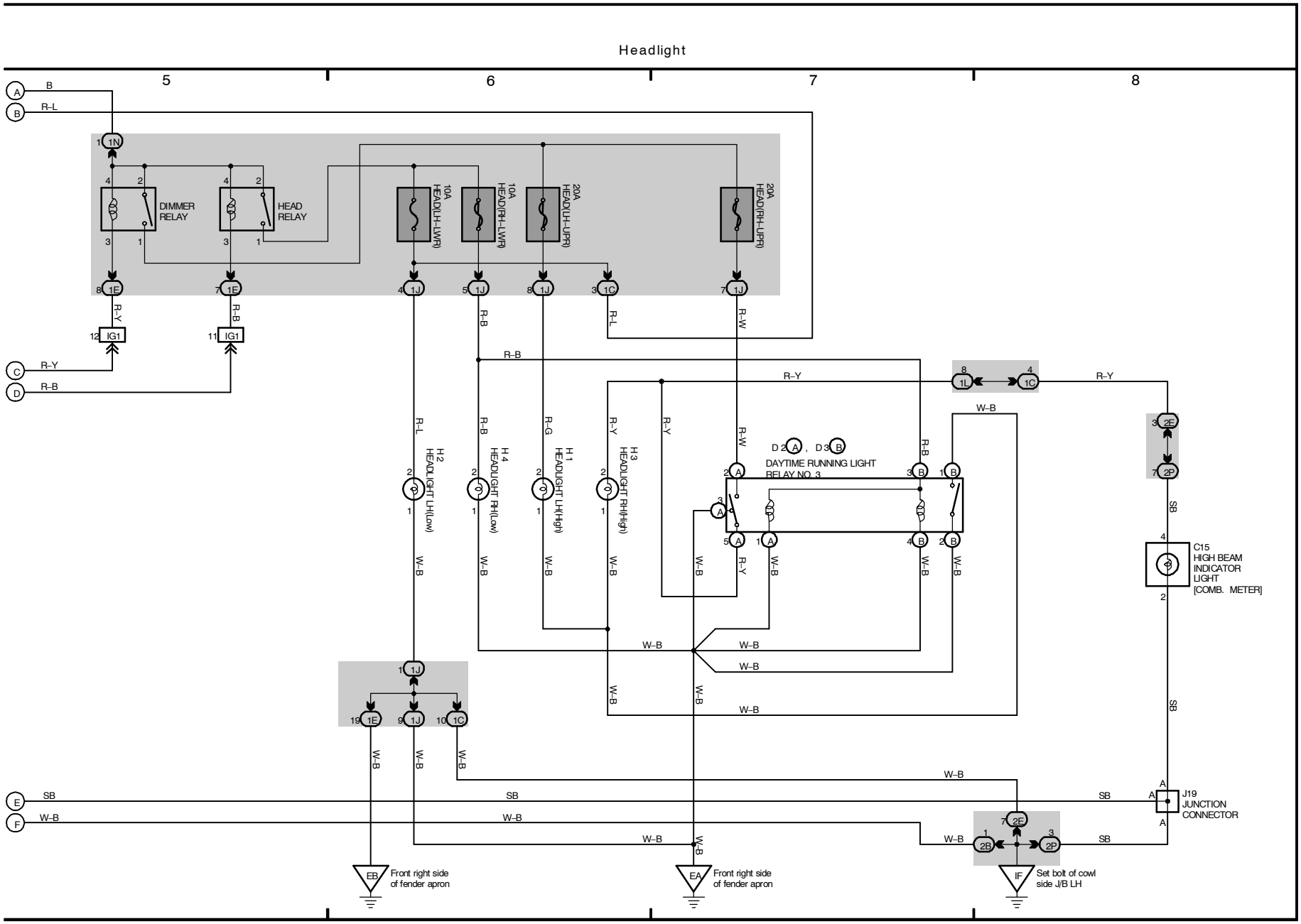
Headlight
5
6
7
8
DIMMER RELAY
HEAD RELAY
10A HEAD(LH-LWR)
10A HEAD(RH-LWR)
20A HEAD(LH-UPR)
20A HEAD(RH-UPR)
H2 HEADLIGHT LH(Low)
H4 HEADLIGHT RH(Low)
H1 HEADLIGHT LH(High)
H3 HEADLIGHT RH(High)
DAYTIME RUNNING LIGHT RELAY NO. 3
C15 HIGH BEAM INDICATOR LIGHT [COMB. METER]
J19 JUNCTION CONNECTOR
EB Front right side of fender apron
EA Front right side of fender apron
IF Set bolt of cowl side J/B LH

5 LAND CRUISER

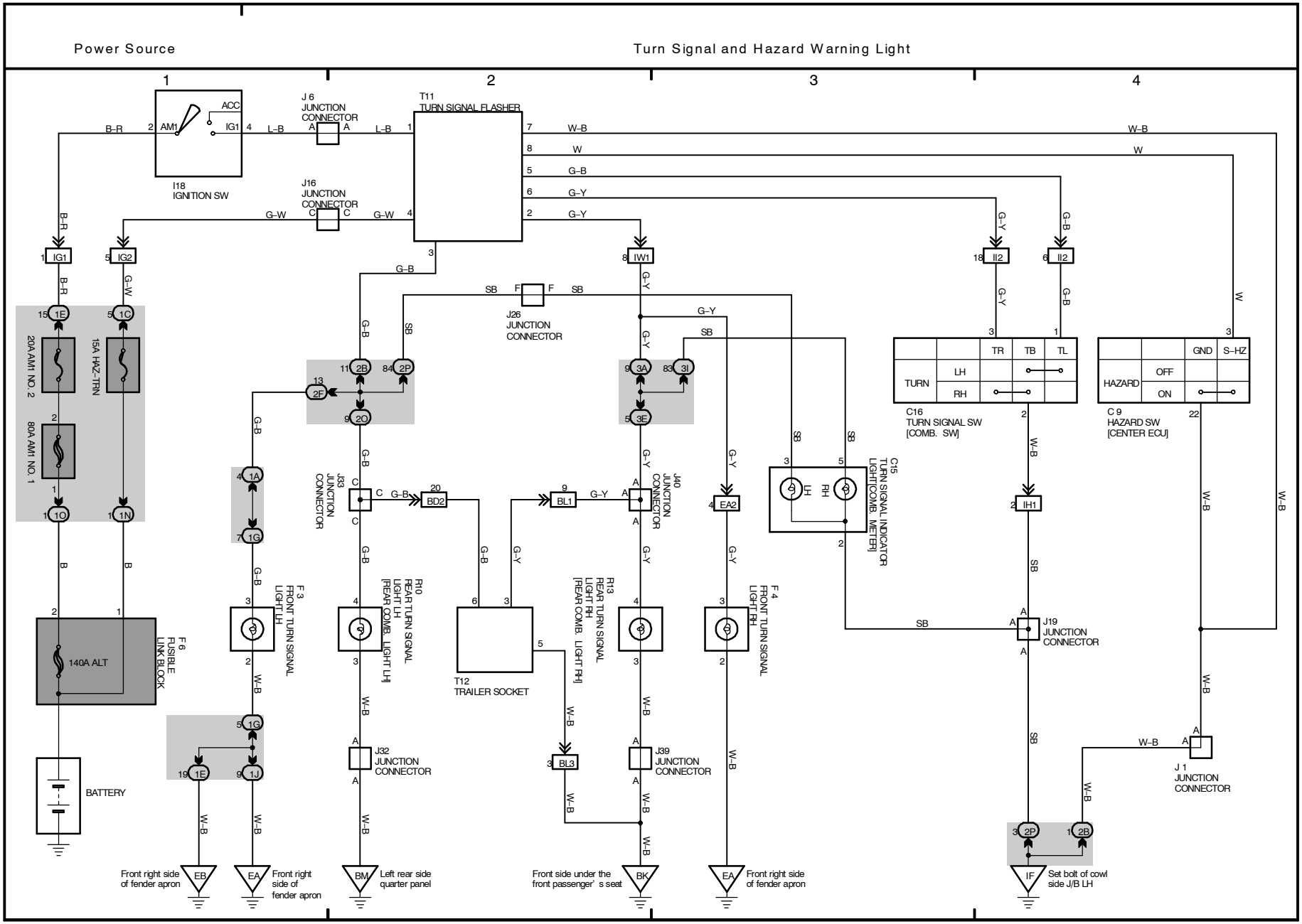

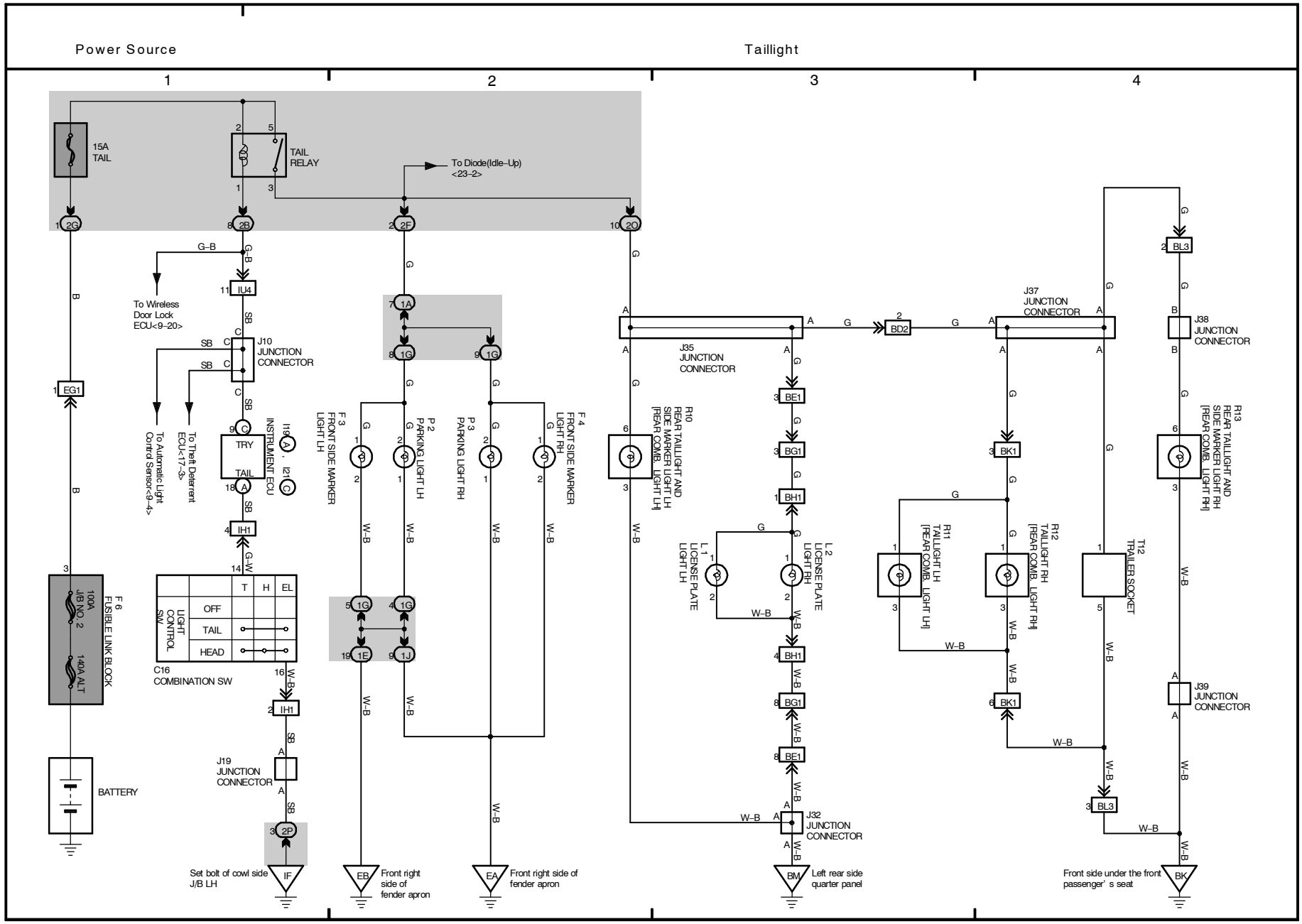
Power Source
Taillight
1
2
3
4
15A TAIL
TAIL RELAY
To Diode(Idle-Up) <23-2>
To Wireless Door Lock ECU<9-20>
J10 JUNCTION CONNECTOR
To Automatic Light Control Sensor<9-4>
To Theft Deterrent ECU<17-3>
INSTRUMENT ECU
TRY
TAIL
C16 COMBINATION SW
LIGHT CONTROL SW
OFF
TAIL
HEAD
T
H
EL
F6 FUSIBLE LINK BLOCK
100A JB NO. 2
140A ALT
BATTERY
J19 JUNCTION CONNECTOR
Set bolt of cowl side J/B LH
F3 FRONT SIDE MARKER LIGHT LH
P2 PARKING LIGHT LH
P3 PARKING LIGHT RH
F4 FRONT SIDE MARKER LIGHT RH
Front right side of fender apron
Front right side of fender apron
J35 JUNCTION CONNECTOR
R10 REAR TAILLIGHT AND SIDE MARKER LIGHT LH [REAR COMB. LIGHT LH]
L1 LICENSE PLATE LIGHT LH
L2 LICENSE PLATE LIGHT RH
J32 JUNCTION CONNECTOR
Left rear side quarter panel
J37 JUNCTION CONNECTOR
R11 TAILLIGHT LH [REAR COMB. LIGHT LH]
R12 TAILLIGHT RH [REAR COMB. LIGHT RH]
T12 TRAILER SOCKET
J38 JUNCTION CONNECTOR
R13 REAR TAILLIGHT AND SIDE MARKER LIGHT RH [REAR COMB. LIGHT RH]
J39 JUNCTION CONNECTOR
Front side under the front passenger' s seat

7 LAND CRUISER

(Cont. next page)

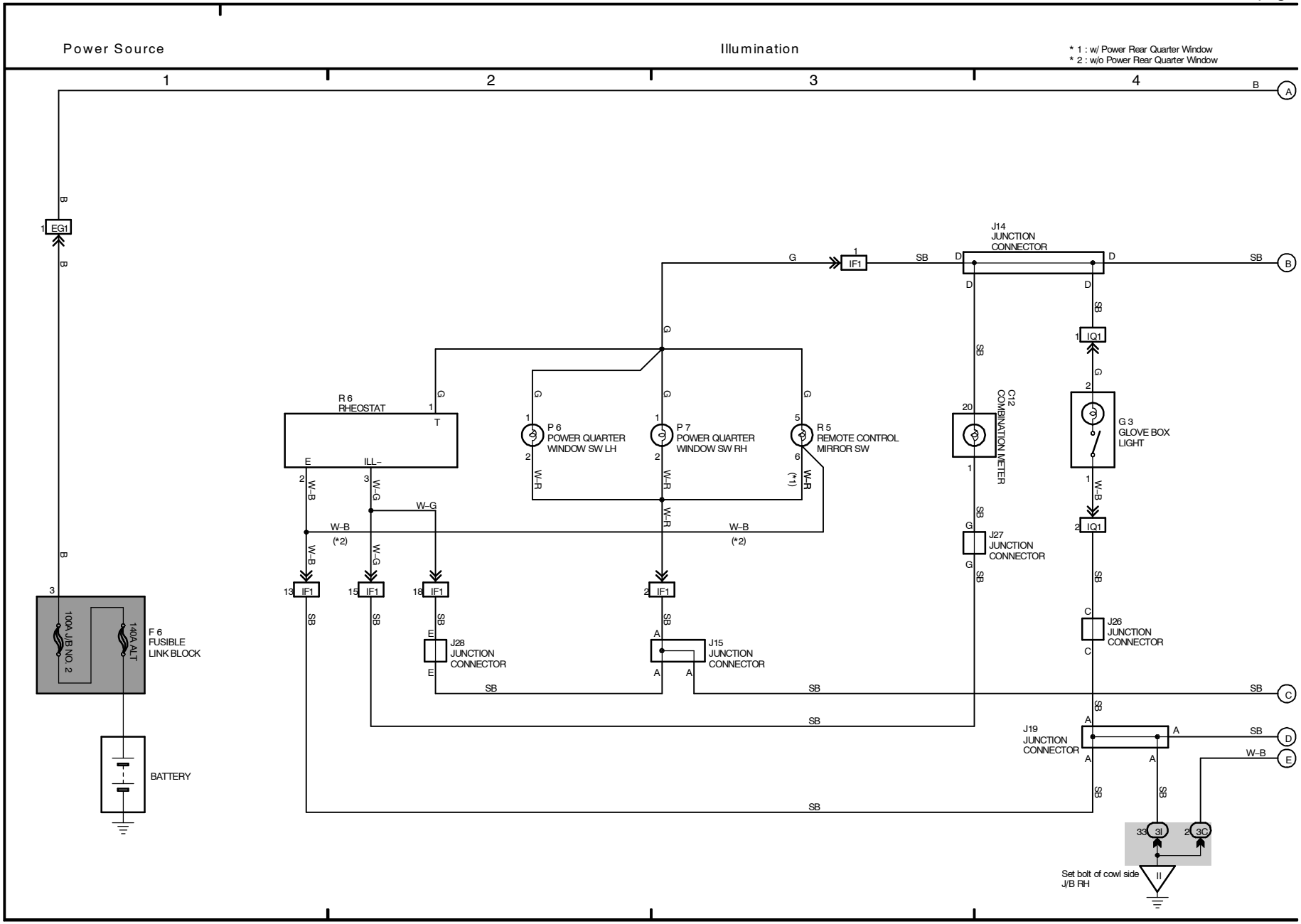

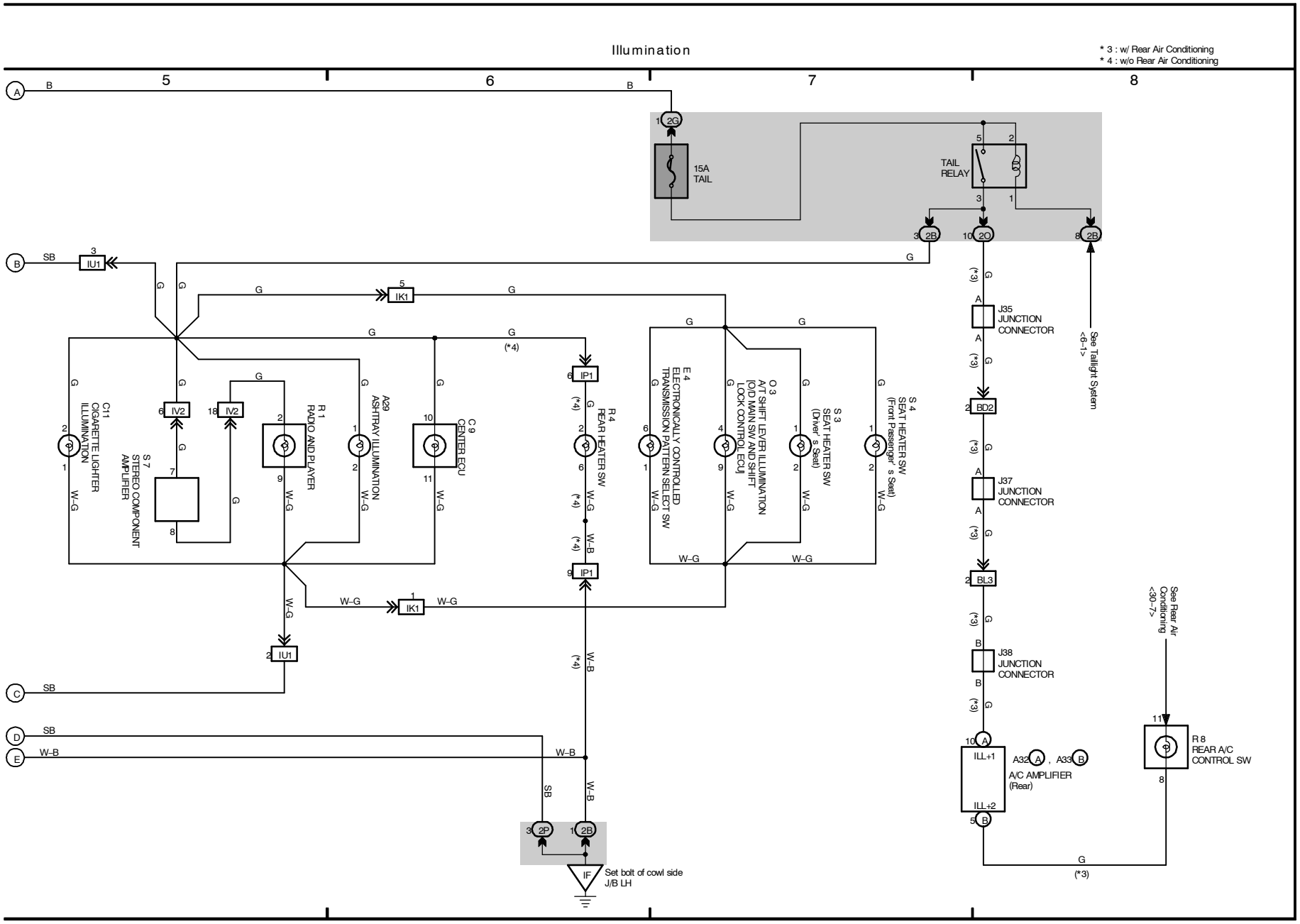
Illumination
* 3 : w/ Rear Air Conditioning
* 4 : w/o Rear Air Conditioning
5
6
7
8
15A
TAIL
TAIL
RELAY
J35
JUNCTION
CONNECTOR
J37
JUNCTION
CONNECTOR
J38
JUNCTION
CONNECTOR
See Taillight System
<6-1>
See Rear Air
Conditioning
<30-7>
C11
CIGARETTE LIGHTER
ILLUMINATION
S 7
STEREO COMPONENT
AMPLIFIER
R 1
RADIO AND PLAYER
A29
ASHTRAY ILLUMINATION
C 9
CENTER ECU
R 4
REAR HEATER SW
E 4
ELECTRONICALLY CONTROLLED
TRANSMISSION PATTERN SELECT SW
O 3
A/T SHIFT LEVER ILLUMINATION
[O/D MAIN SW AND SHIFT
LOCK CONTROL ECU]
S 3
SEAT HEATER SW
(Driver' s Seat)
S 4
SEAT HEATER SW
(Front Passenger' s Seat)
ILL+1
ILL+2
A32
A33
A/C AMPLIFIER
(Rear)
R 8
REAR A/C
CONTROL SW
Set bolt of cowl side
J/B LH

8 LAND CRUISER

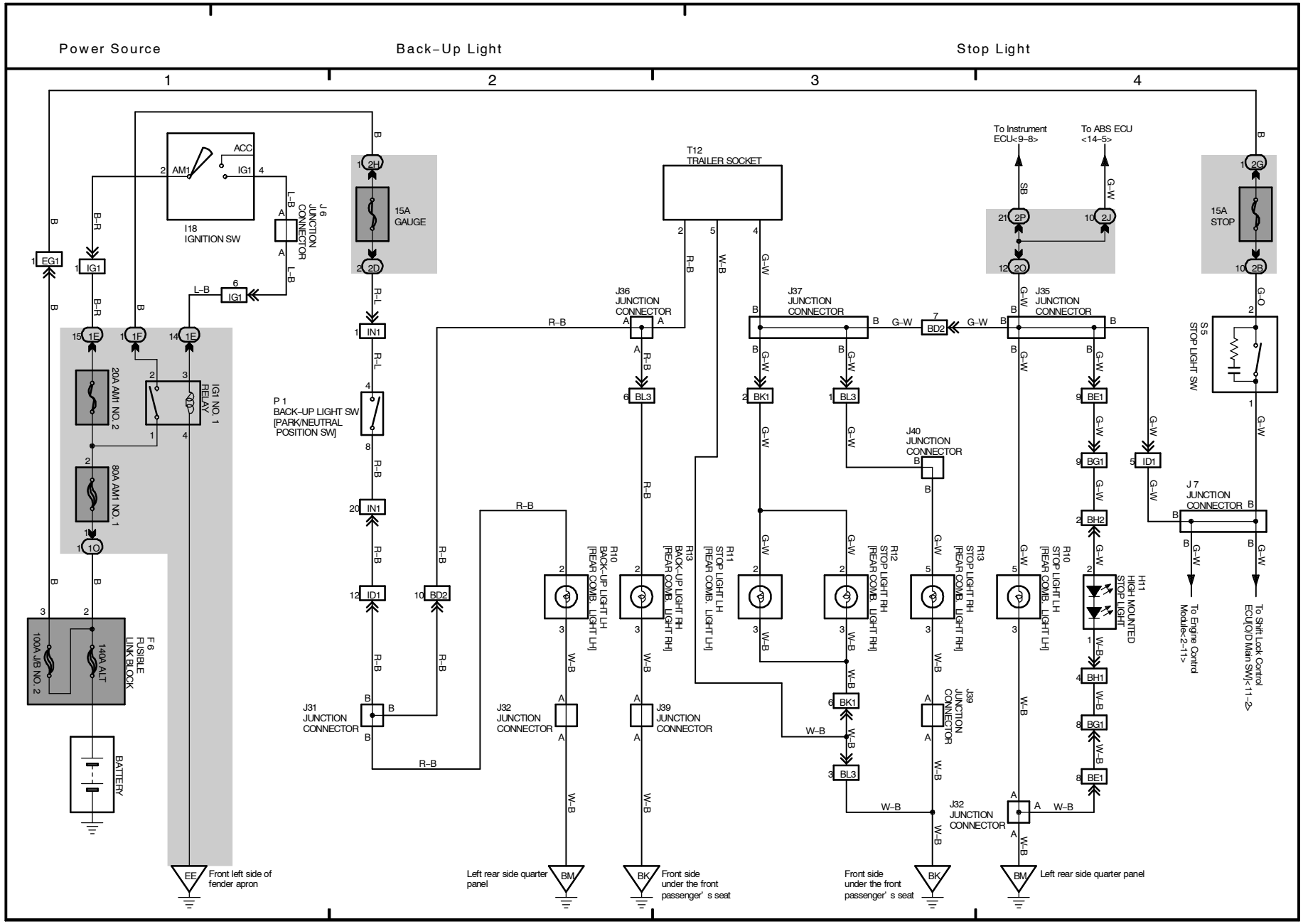

9 LAND CRUISER

(Cont. next page)

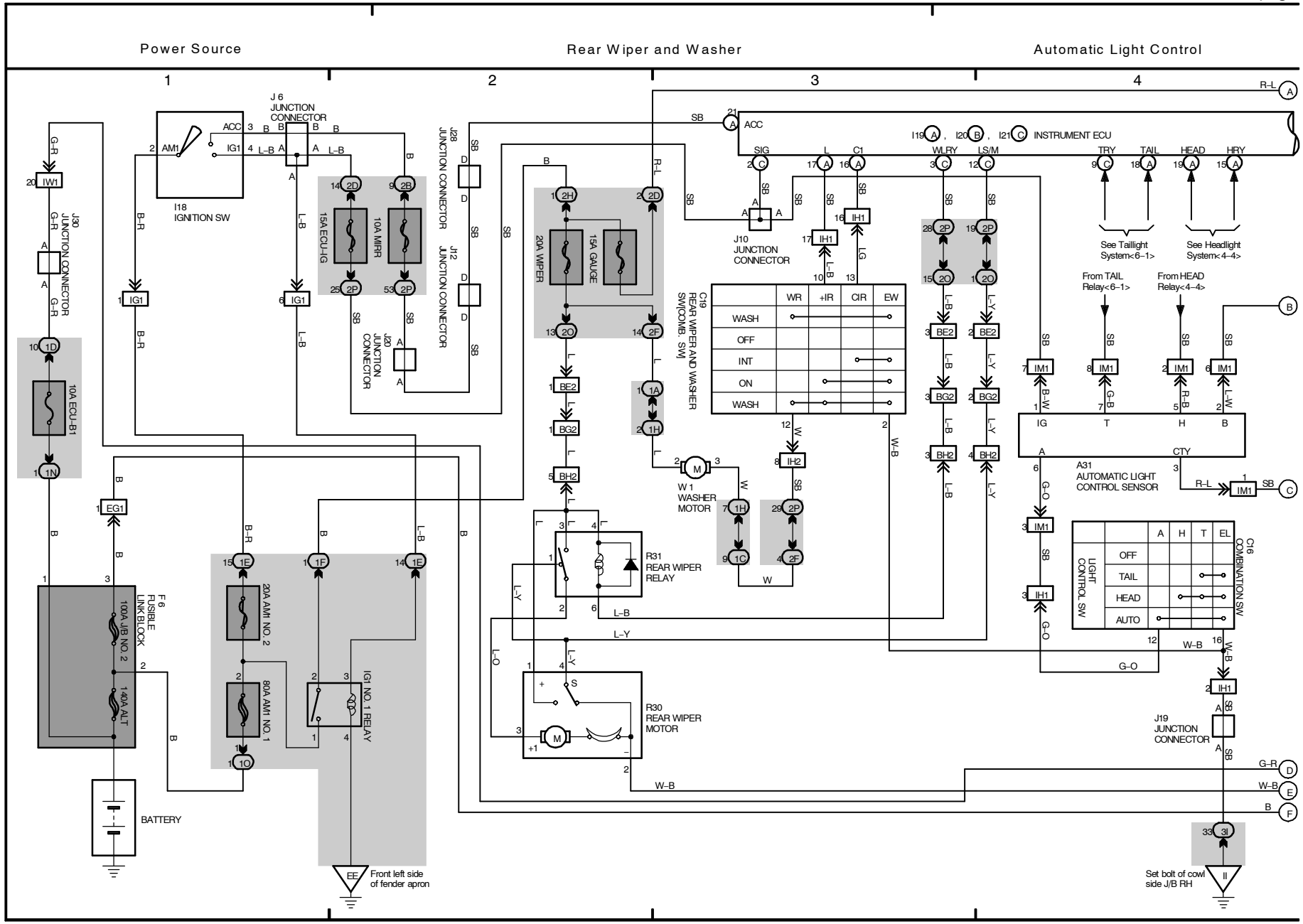

(Cont. next page)

Interior Light

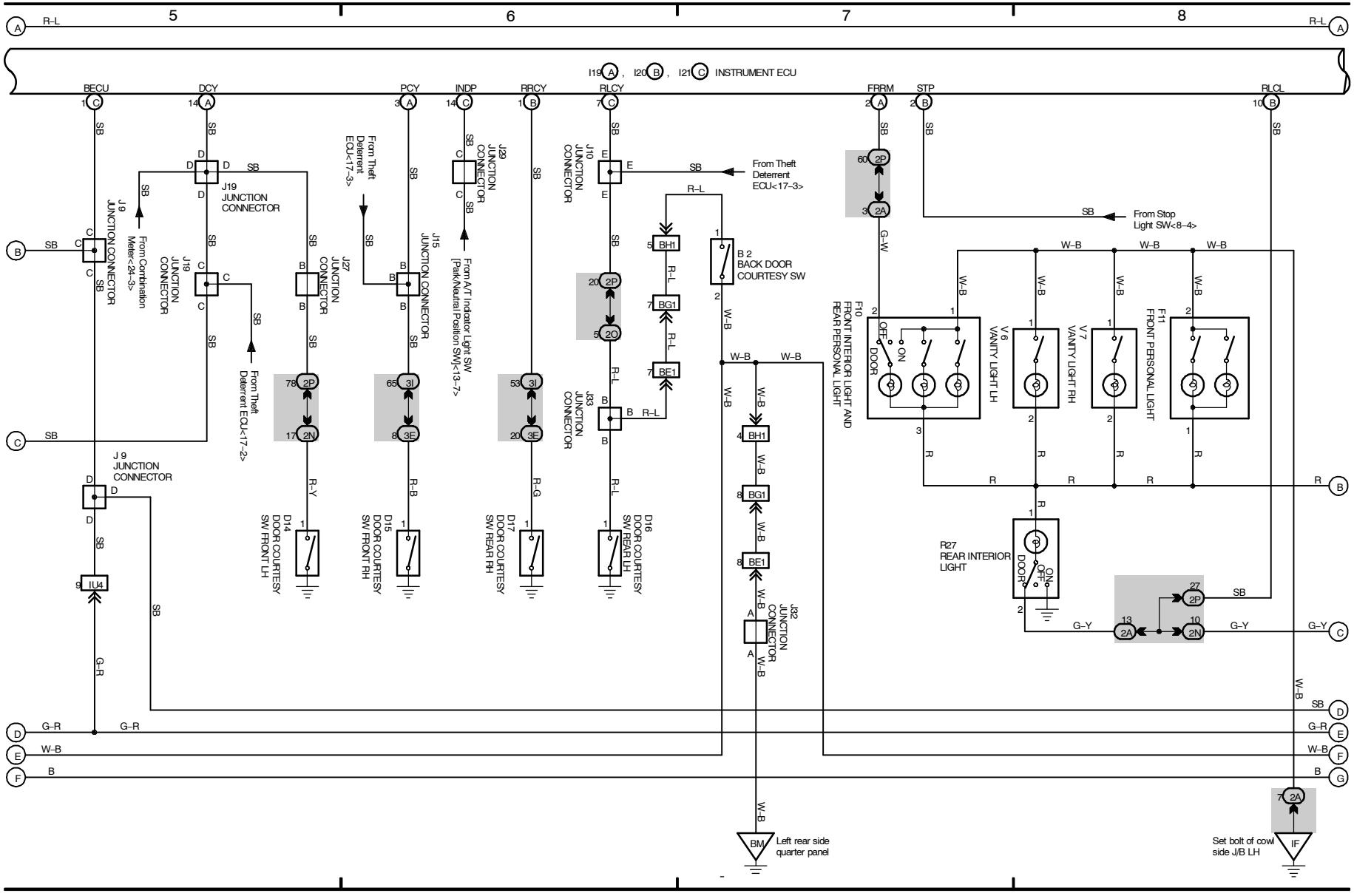

9 LAND CRUISER (Cont' d)

(Cont. next page)

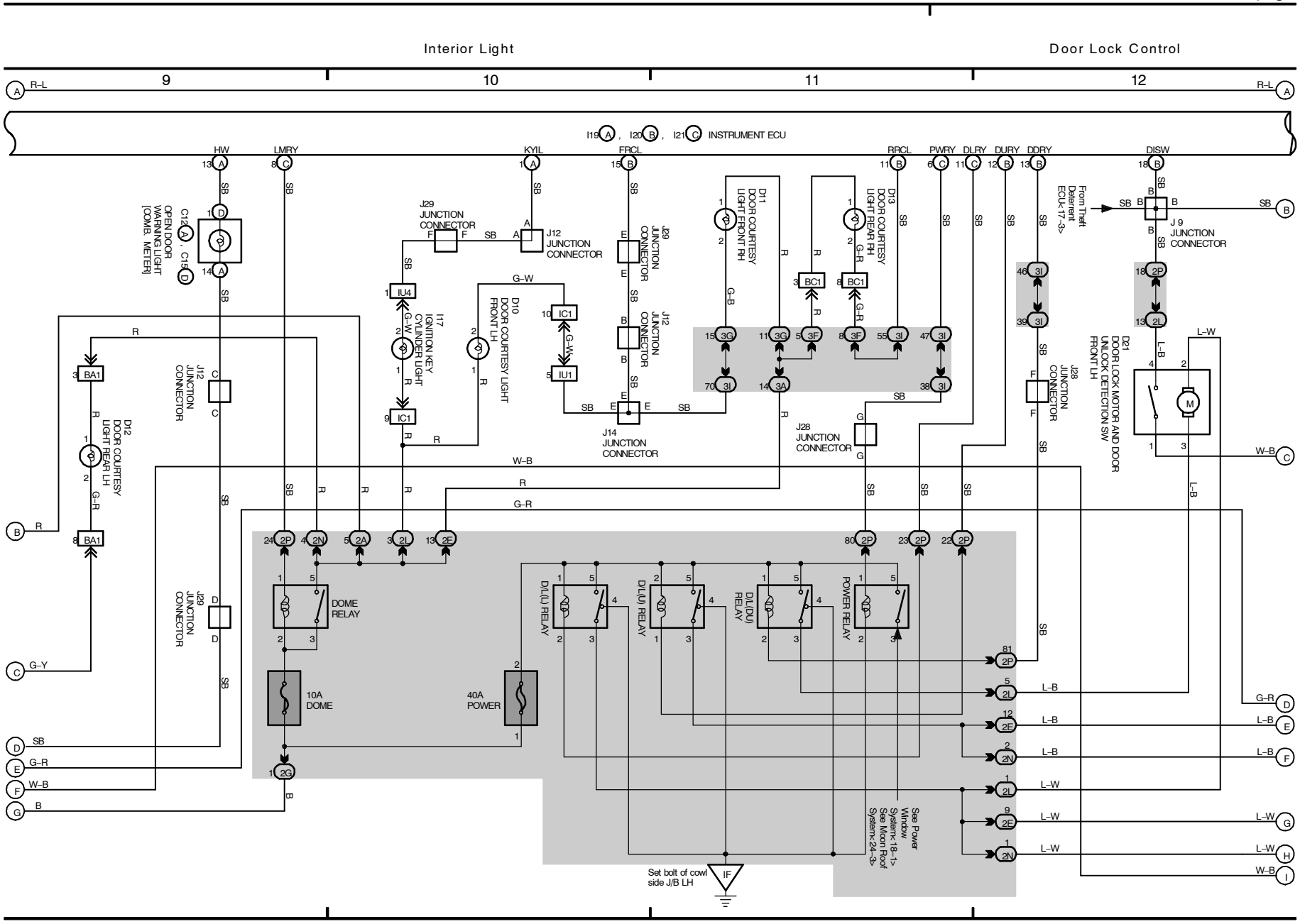

(Cont. next page)

Door Lock Control

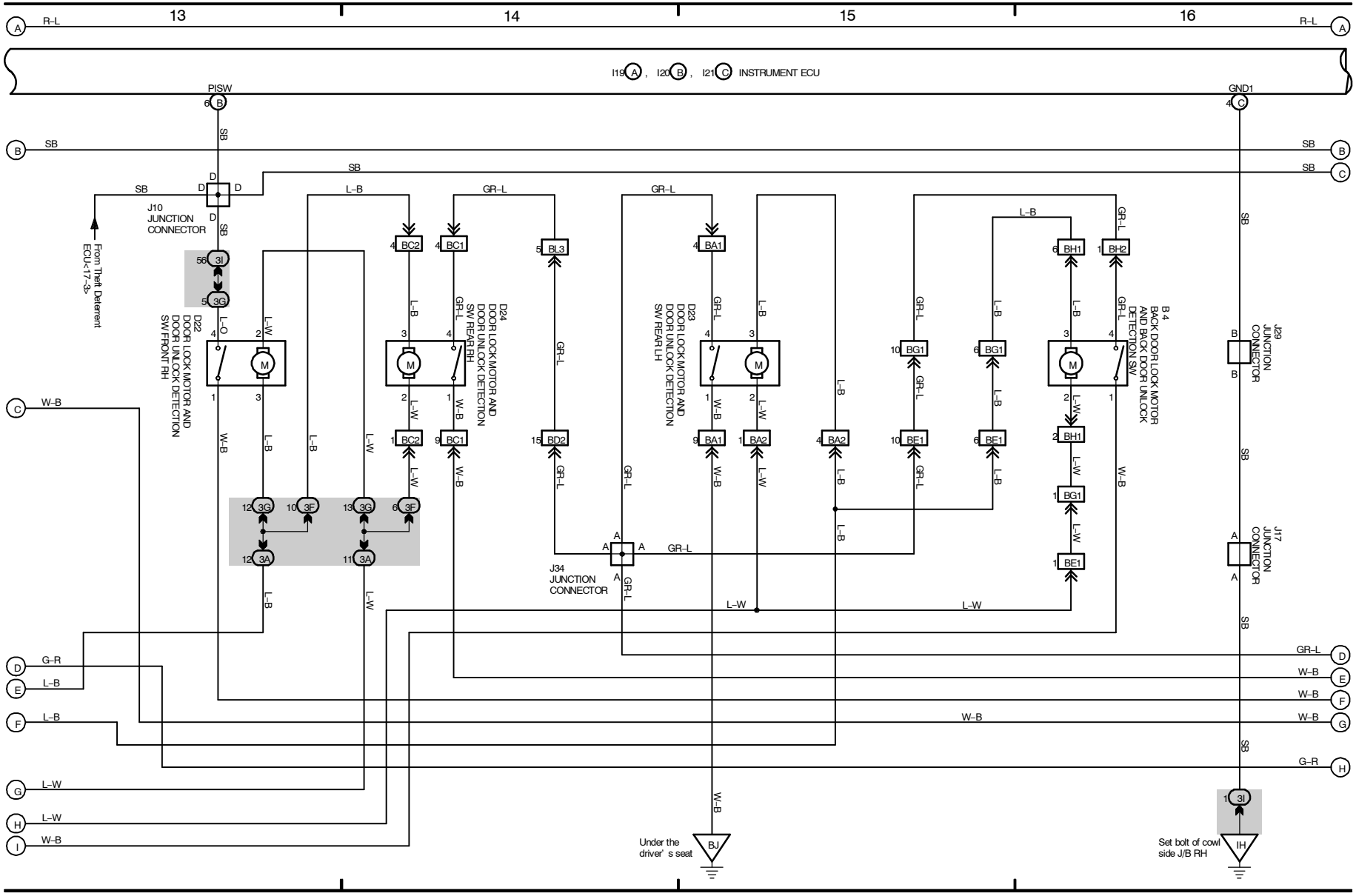

9 LAND CRUISER (Cont' d)

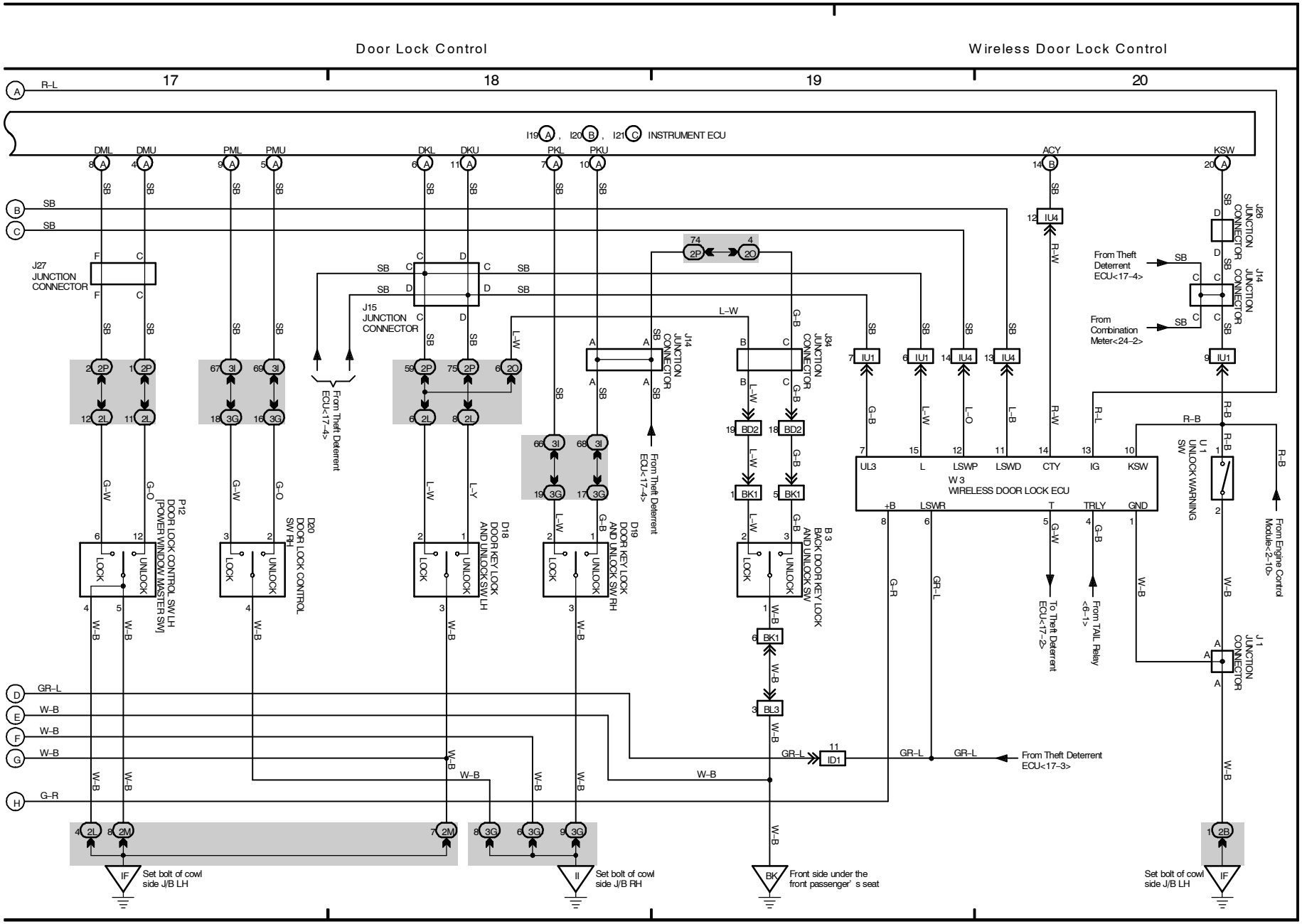

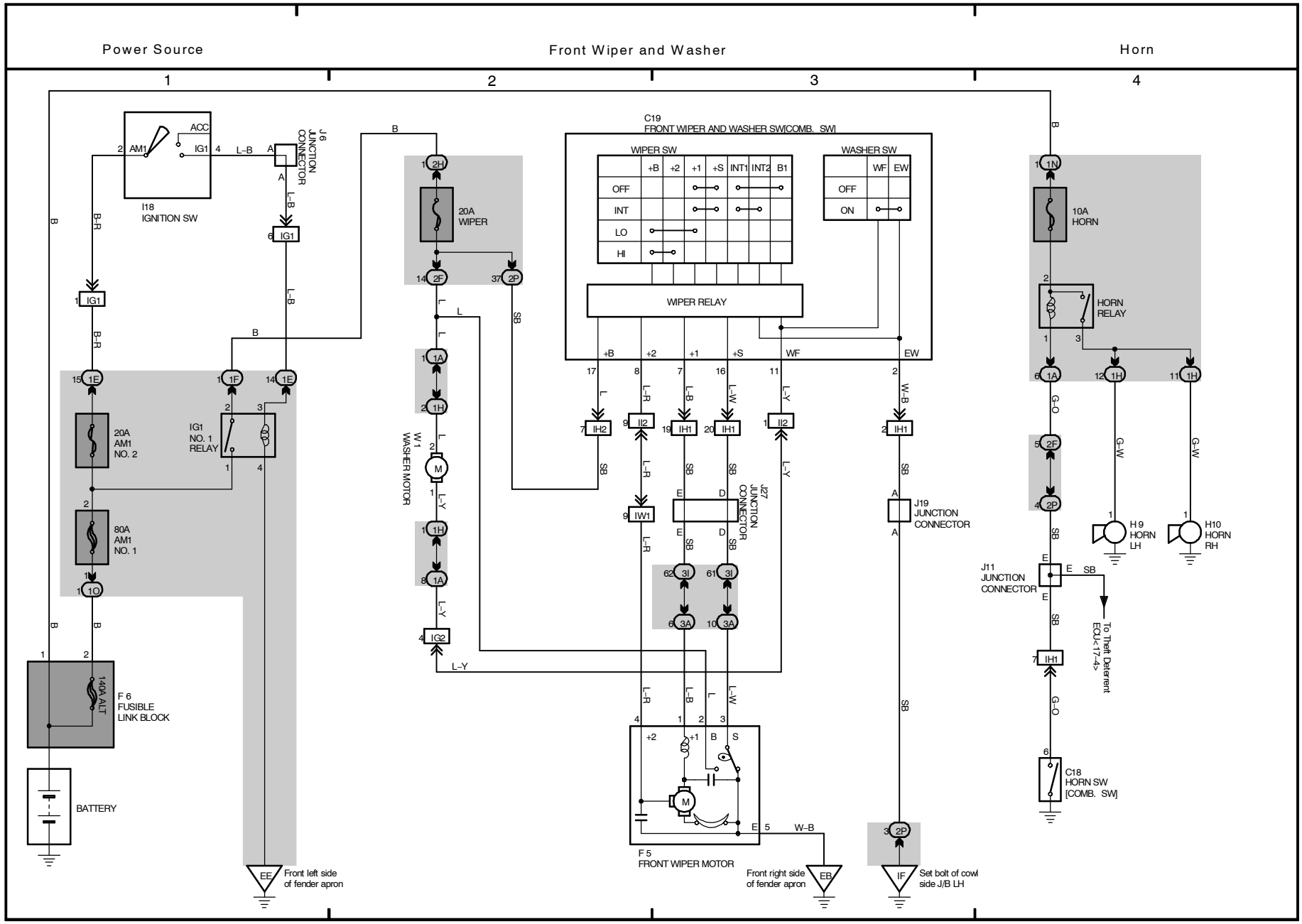
Power Source
Front Wiper and Washer
Horn
1
2
3
4
I18
IGNITION SW
ACC
AM1
IG1
J6
JUNCTION
CONNECTOR
20A
AM1
NO. 2
IG1
NO. 1
RELAY
80A
AM1
NO. 1
140A ALT
F 6
FUSIBLE
LINK BLOCK
BATTERY
Front left side
of fender apron
20A
WIPER
W 1
WASHER MOTOR
C19
FRONT WIPER AND WASHER SW[COMB. SW]
WIPER SW
WASHER SW
OFF
INT
LO
HI
ON
WIPER RELAY
J27
JUNCTION
CONNECTOR
F 5
FRONT WIPER MOTOR
Front right side
of fender apron
J19
JUNCTION
CONNECTOR
Set bolt of cowl
side J/B LH
10A
HORN
HORN
RELAY
H 9
HORN
LH
H10
HORN
RH
J11
JUNCTION
CONNECTOR
To Theft Deterrent
ECU<17-4>
C18
HORN SW
[COMB. SW]

11 LAND CRUISER

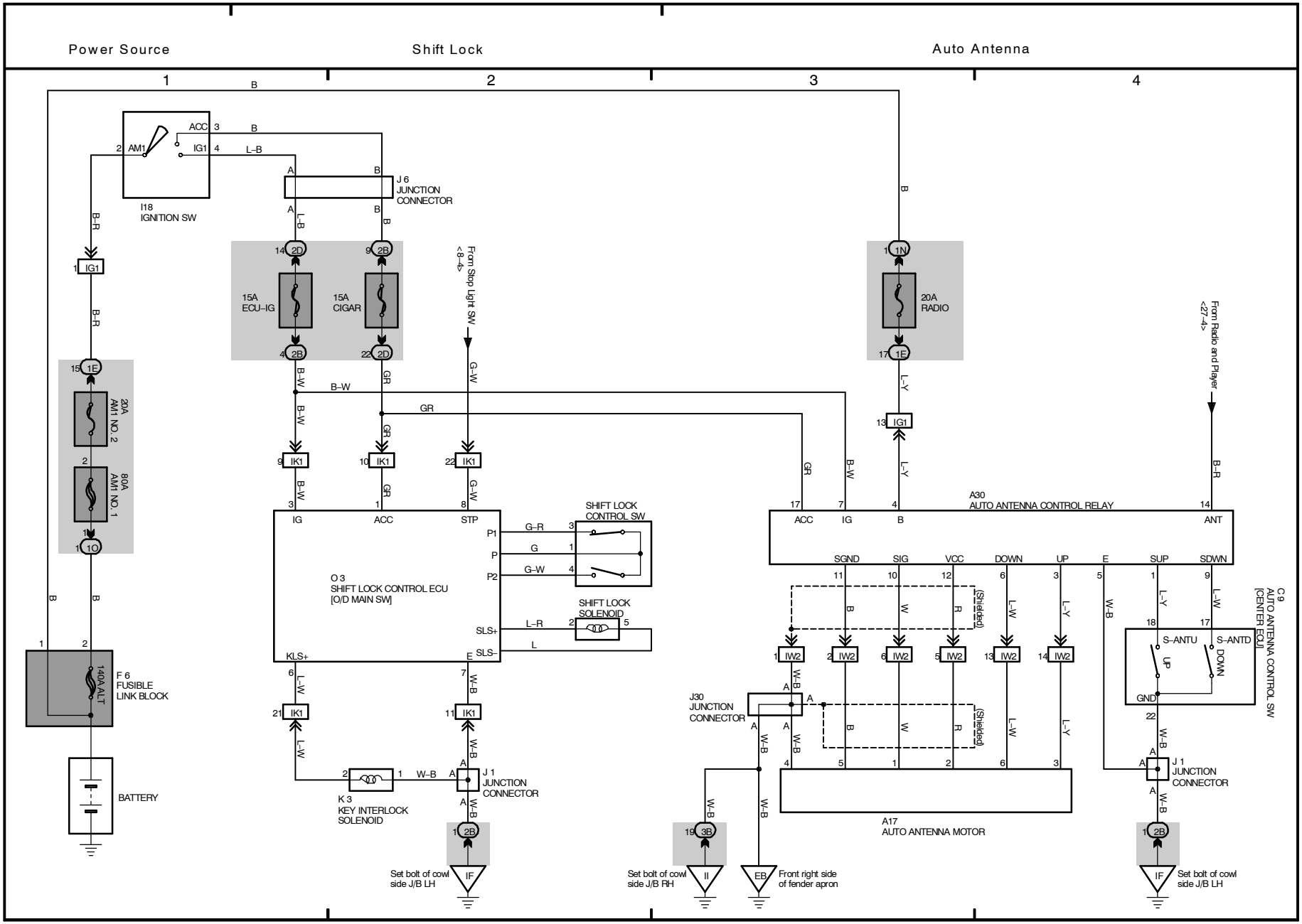

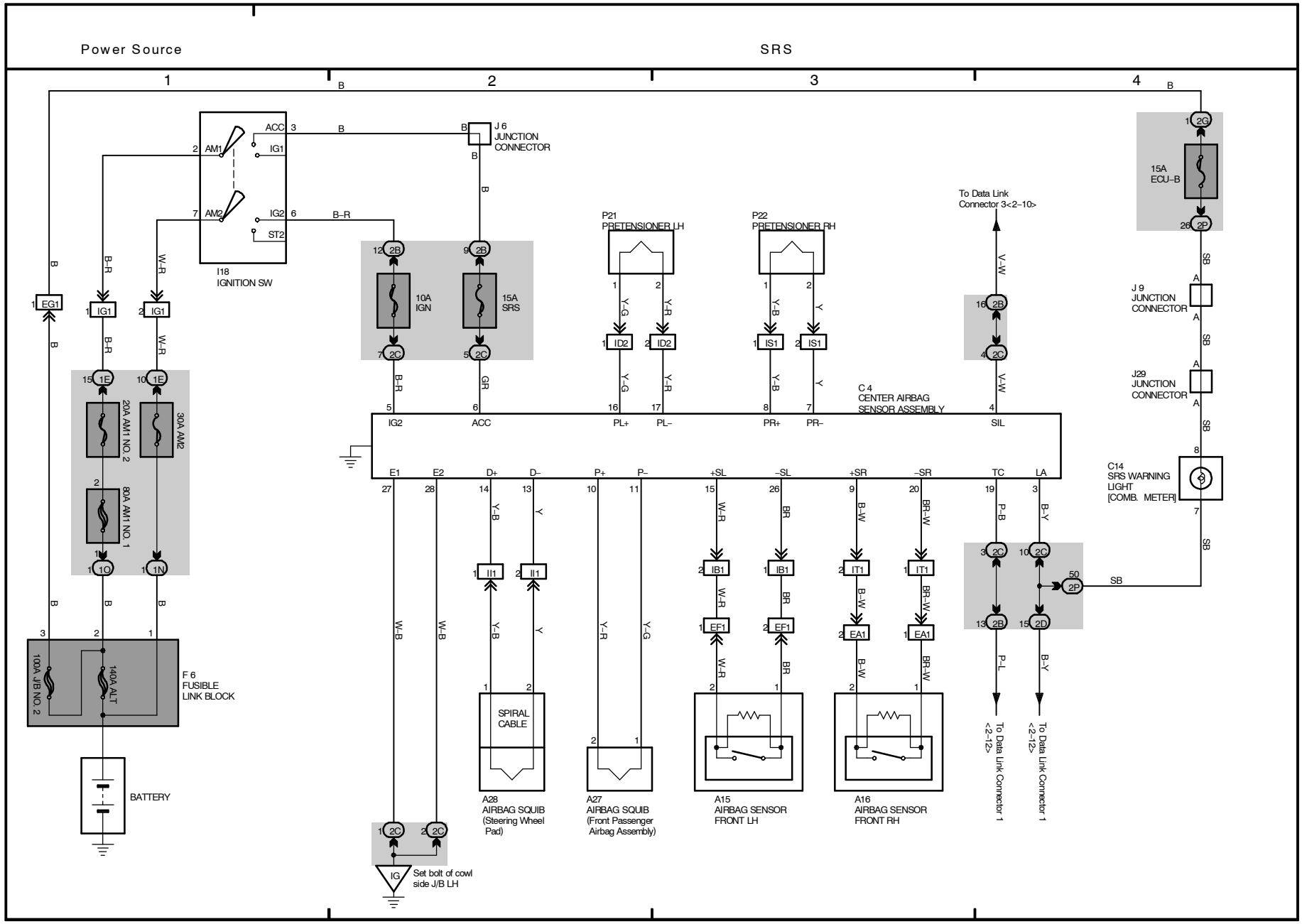
Power Source
SRS
1
2
3
4
I18
IGNITION SW
ACC
IG1
AM1
AM2
IG2
ST2
J 6
JUNCTION
CONNECTOR
10A
IGN
15A
SRS
P21
PRETENSIONER LH
P22
PRETENSIONER RH
To Data Link
Connector 3<2-10>
15A
ECU-B
J 9
JUNCTION
CONNECTOR
J29
JUNCTION
CONNECTOR
C 4
CENTER AIRBAG
SENSOR ASSEMBLY
IG2
ACC
PL+
PL–
PR+
PR–
SIL
E1
E2
D+
D–
P+
P–
+SL
–SL
+SR
–SR
TC
LA
C14
SRS WARNING
LIGHT
[COMB. METER]
20A AM1 NO. 2
30A AM2
80A AM1 NO. 1
100A JB NO. 2
140A ALT
F 6
FUSIBLE
LINK BLOCK
BATTERY
SPIRAL
CABLE
A28
AIRBAG SQUIB
(Steering Wheel
Pad)
A27
AIRBAG SQUIB
(Front Passenger
Airbag Assembly)
A15
AIRBAG SENSOR
FRONT LH
A16
AIRBAG SENSOR
FRONT RH
To Data Link Connector 1
<2-12>
To Data Link Connector 1
<2-12>
IG
Set bolt of cowl
side J/B LH

(Cont. next page)

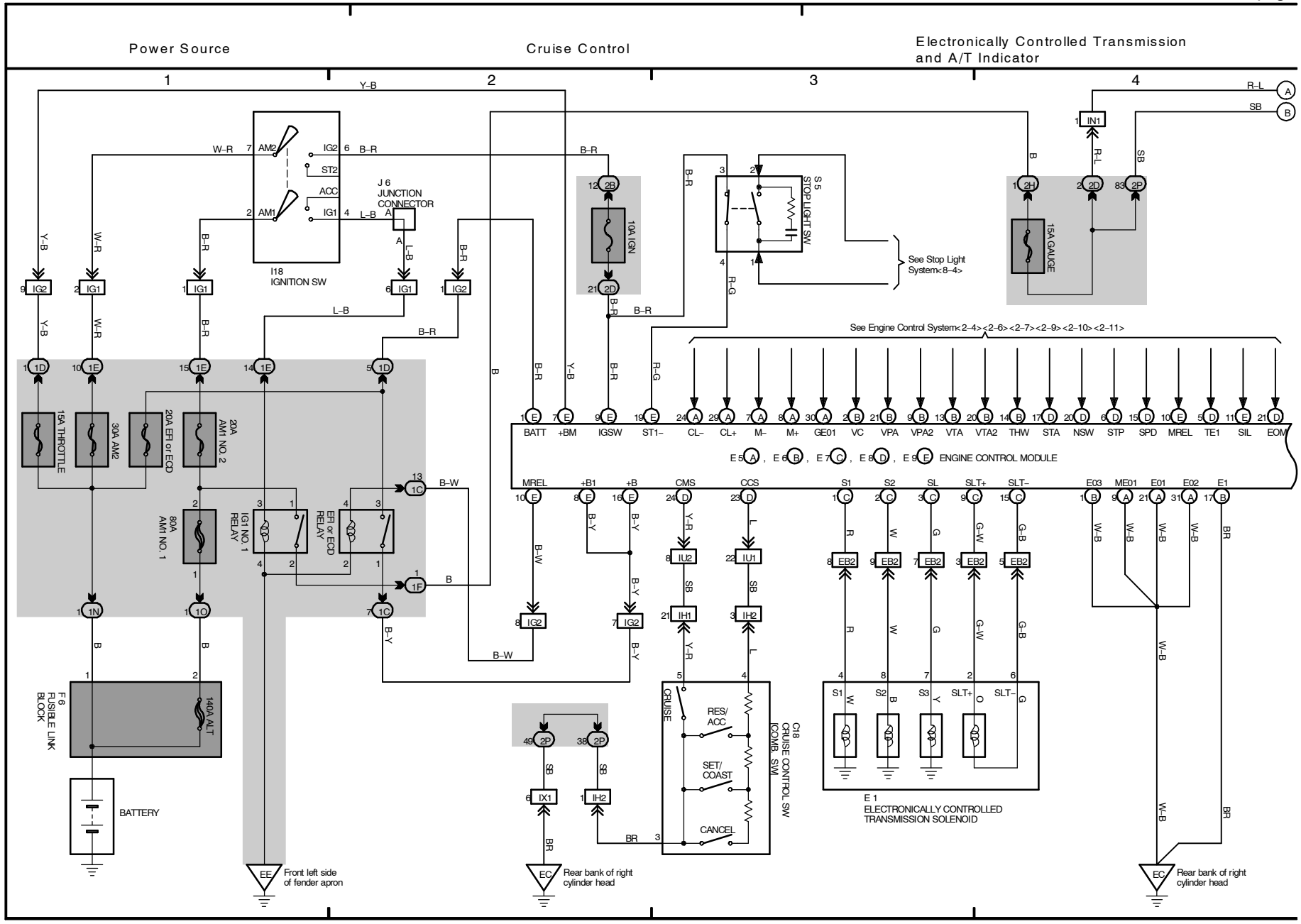

Electronically Controlled Transmission and A/T Indicator

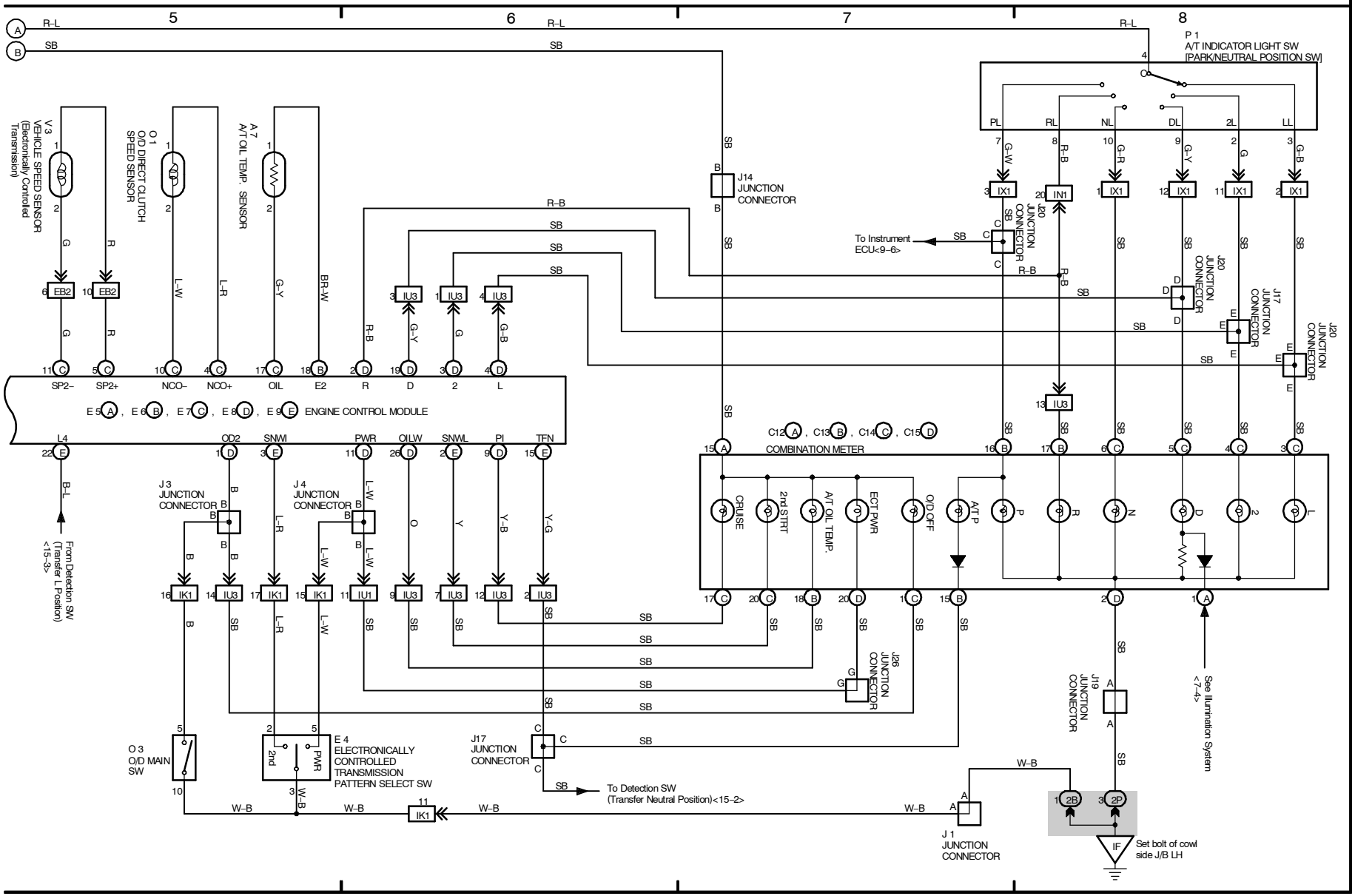

14 LAND CRUISER

(Cont. next page)

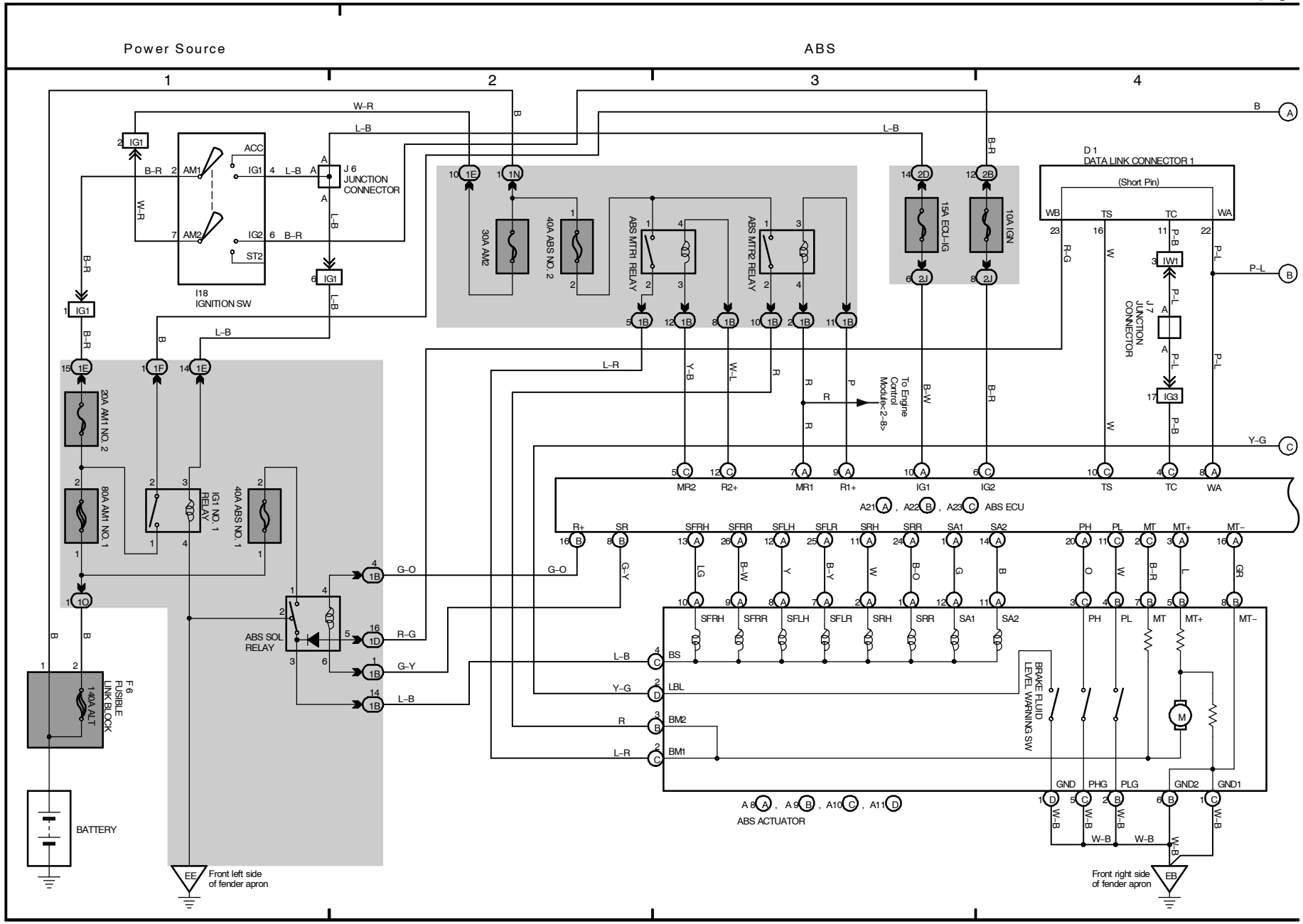

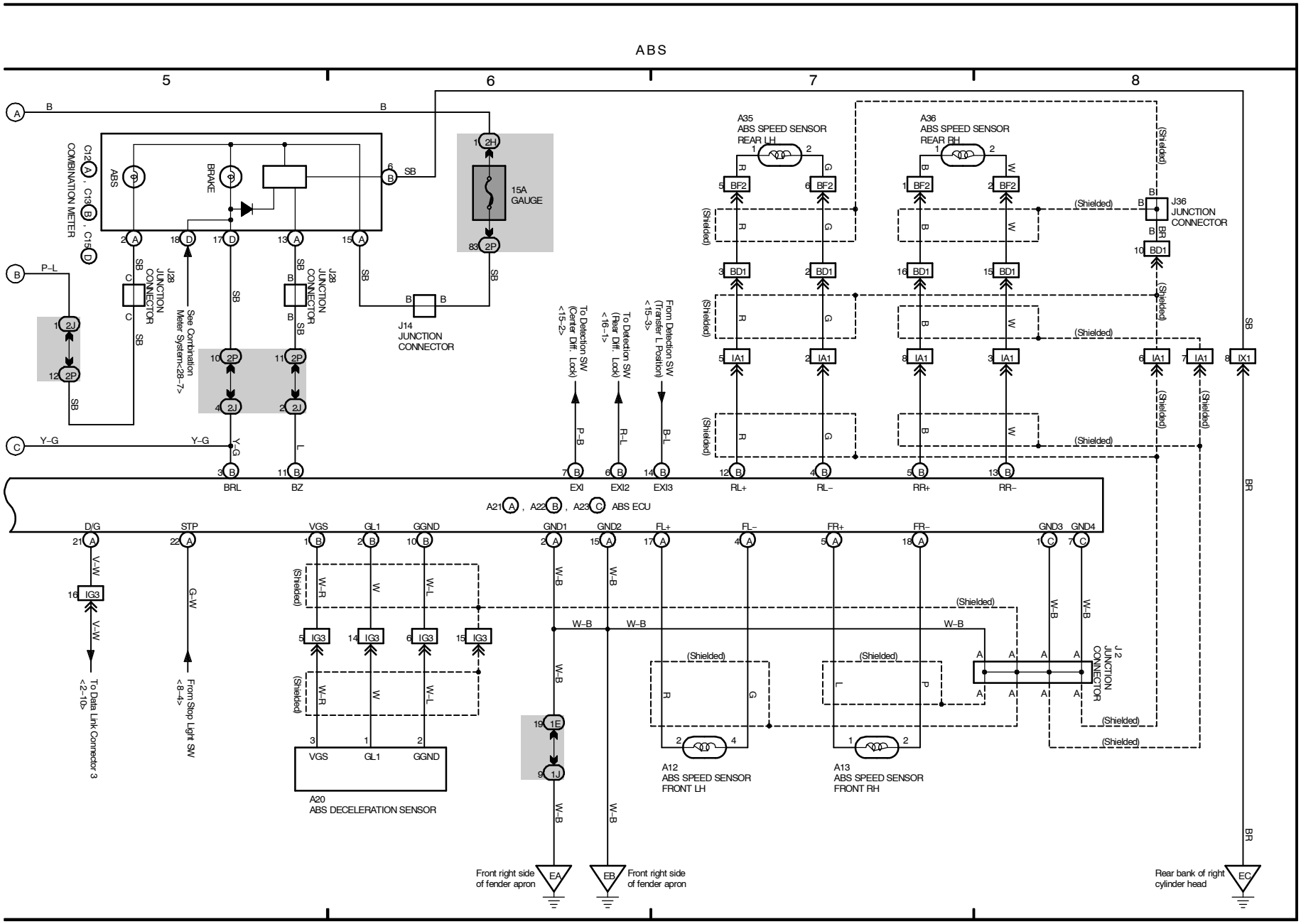
ABS
5
6
7
8
COMBINATION METER
ABS
BRAKE
15A
GAUGE
J28
JUNCTION
CONNECTOR
See Combination
Meter System<28-7>
J14
JUNCTION
CONNECTOR
To Detection SW
(Center Diff. Lock)
<15-2>
To Detection SW
(Rear Diff. Lock)
<16-1>
From Detection SW
(Transfer L Position)
<15-3>
A35
ABS SPEED SENSOR
REAR LH
A36
ABS SPEED SENSOR
REAR RH
J36
JUNCTION
CONNECTOR
(Shielded)
BRL
BZ
EXI
EXI2
EXI3
RL+
RL−
RR+
RR−
A21 A, A22 B, A23 C ABS ECU
D/G
STP
VGS
GL1
GGND
GND1
GND2
FL+
FL−
FR+
FR−
GND3
GND4
To Data Link Connector 3
<2-10>
From Stop Light SW
<8-4>
A20
ABS DECELERATION SENSOR
A12
ABS SPEED SENSOR
FRONT LH
A13
ABS SPEED SENSOR
FRONT RH
J2
JUNCTION
CONNECTOR
Front right side
of fender apron
Rear bank of right
cylinder head

15 LAND CRUISER

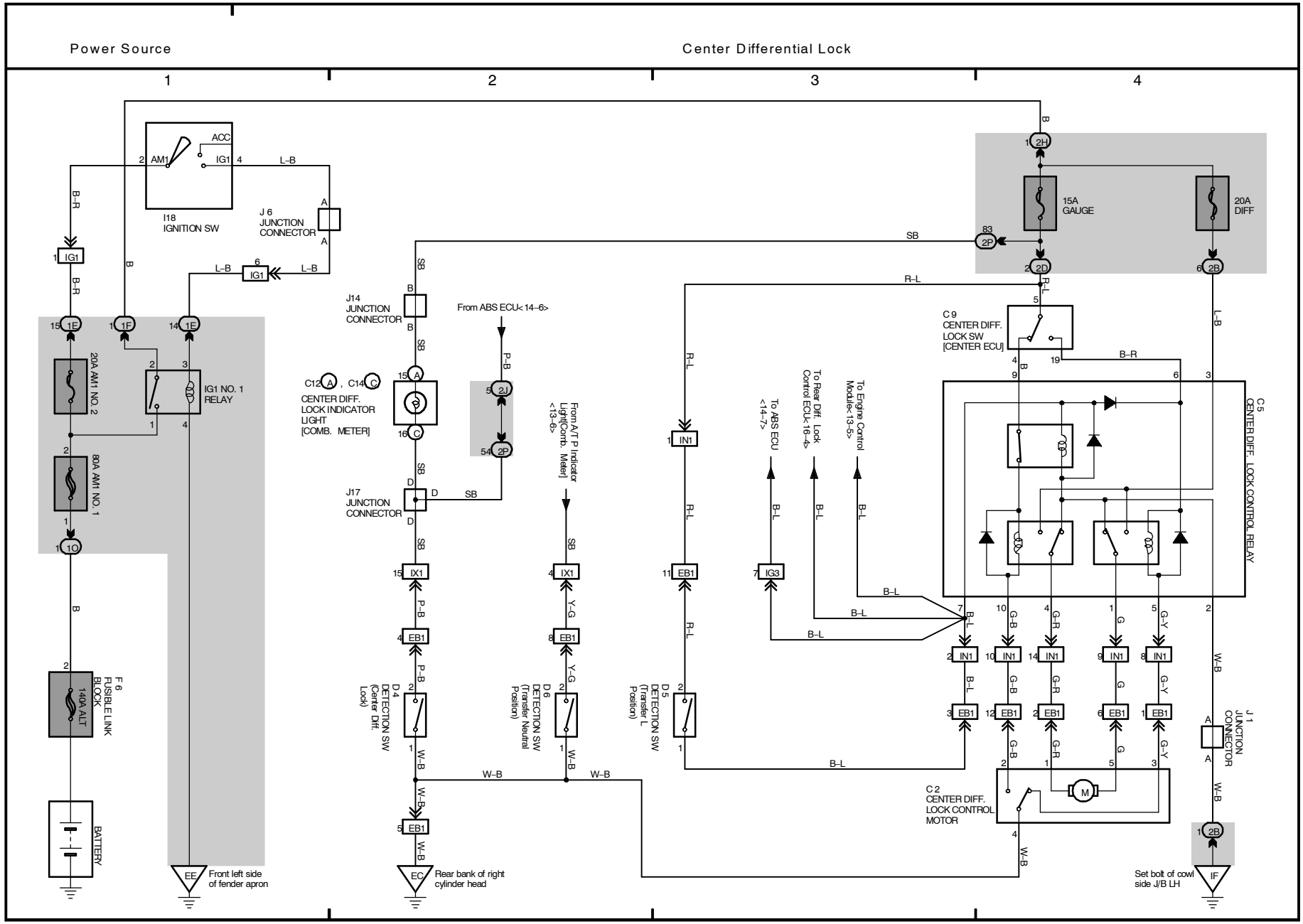

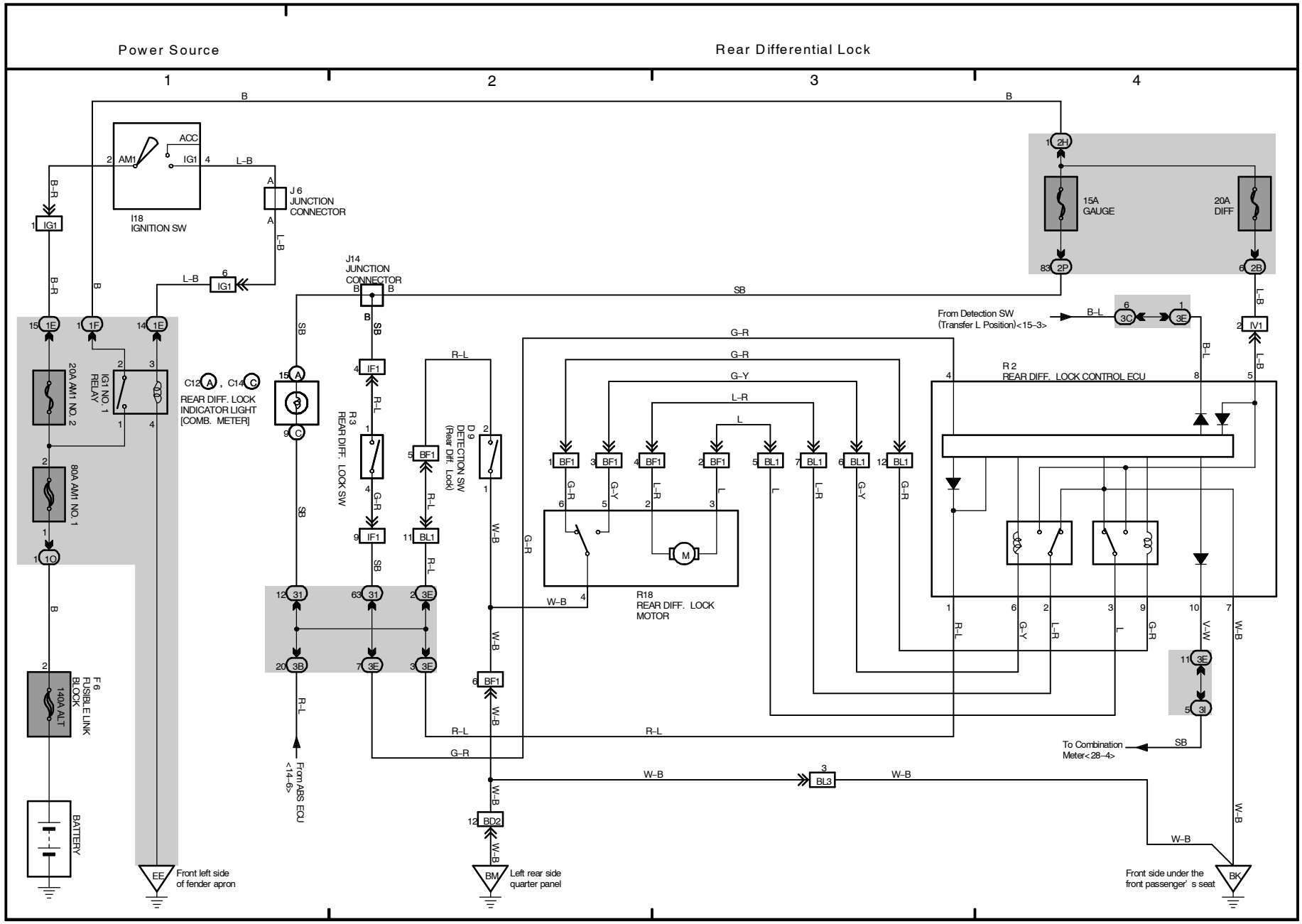
Power Source
Rear Differential Lock
1
2
3
4
I18
IGNITION SW
ACC
AM1
IG1
J 6
JUNCTION
CONNECTOR
J14
JUNCTION
CONNECTOR
15A
GAUGE
20A
DIFF
20A AM1 NO. 2
IG1 NO. 1
RELAY
80A AM1 NO. 1
F 6
FUSIBLE LINK
BLOCK
140A ALT
BATTERY
C12 , C14
REAR DIFF. LOCK
INDICATOR LIGHT
[COMB. METER]
R3
REAR DIFF. LOCK SW
D 9
DETECTION SW
(Rear Diff. Lock)
From Detection SW
(Transfer L Position)<15–3>
R 2
REAR DIFF. LOCK CONTROL ECU
R18
REAR DIFF. LOCK
MOTOR
To Combination
Meter<28–4>
From ABS ECU
<14–6>
Front left side
of fender apron
Left rear side
quarter panel
Front side under the
front passenger' s seat

17 LAND CRUISER

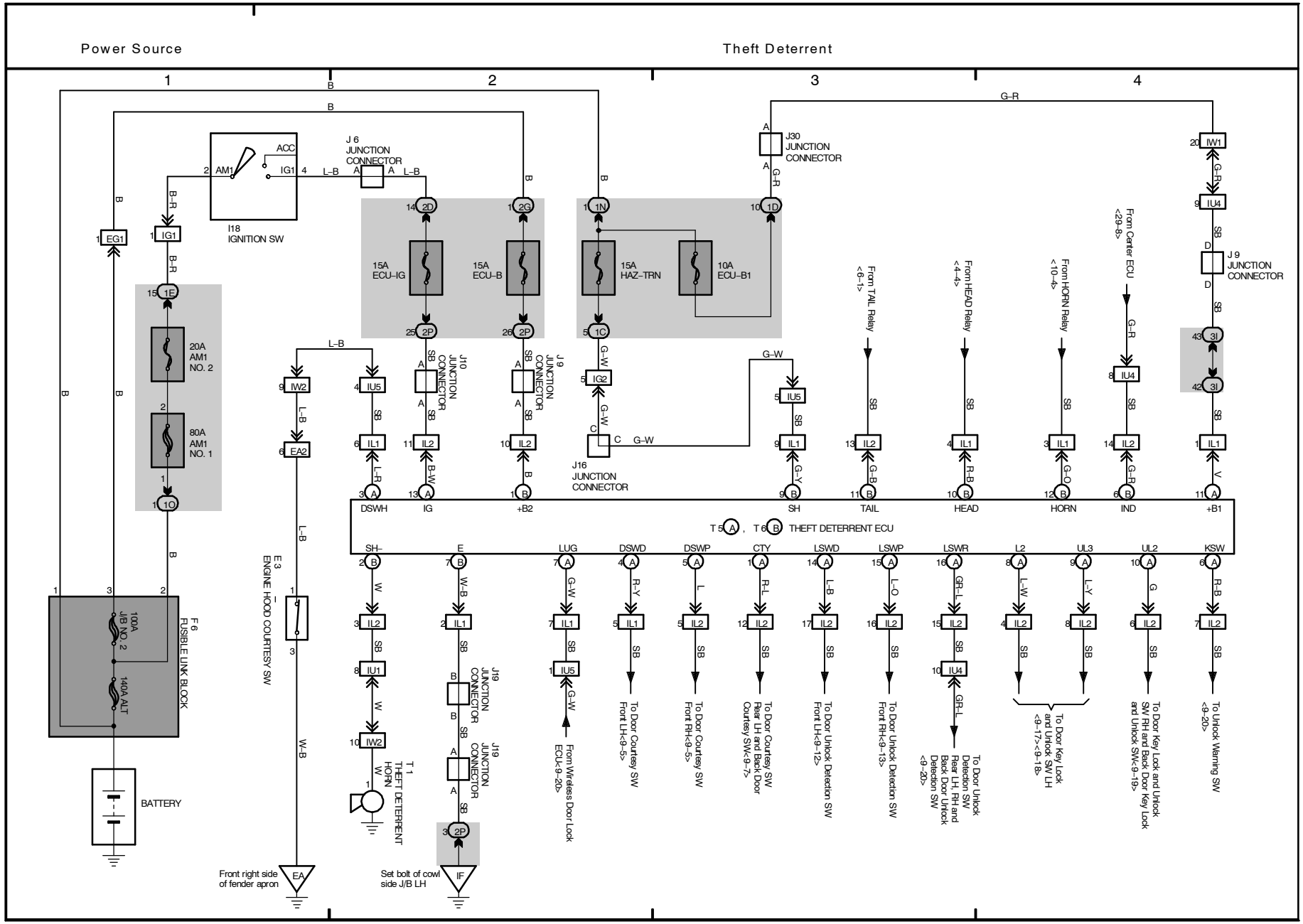

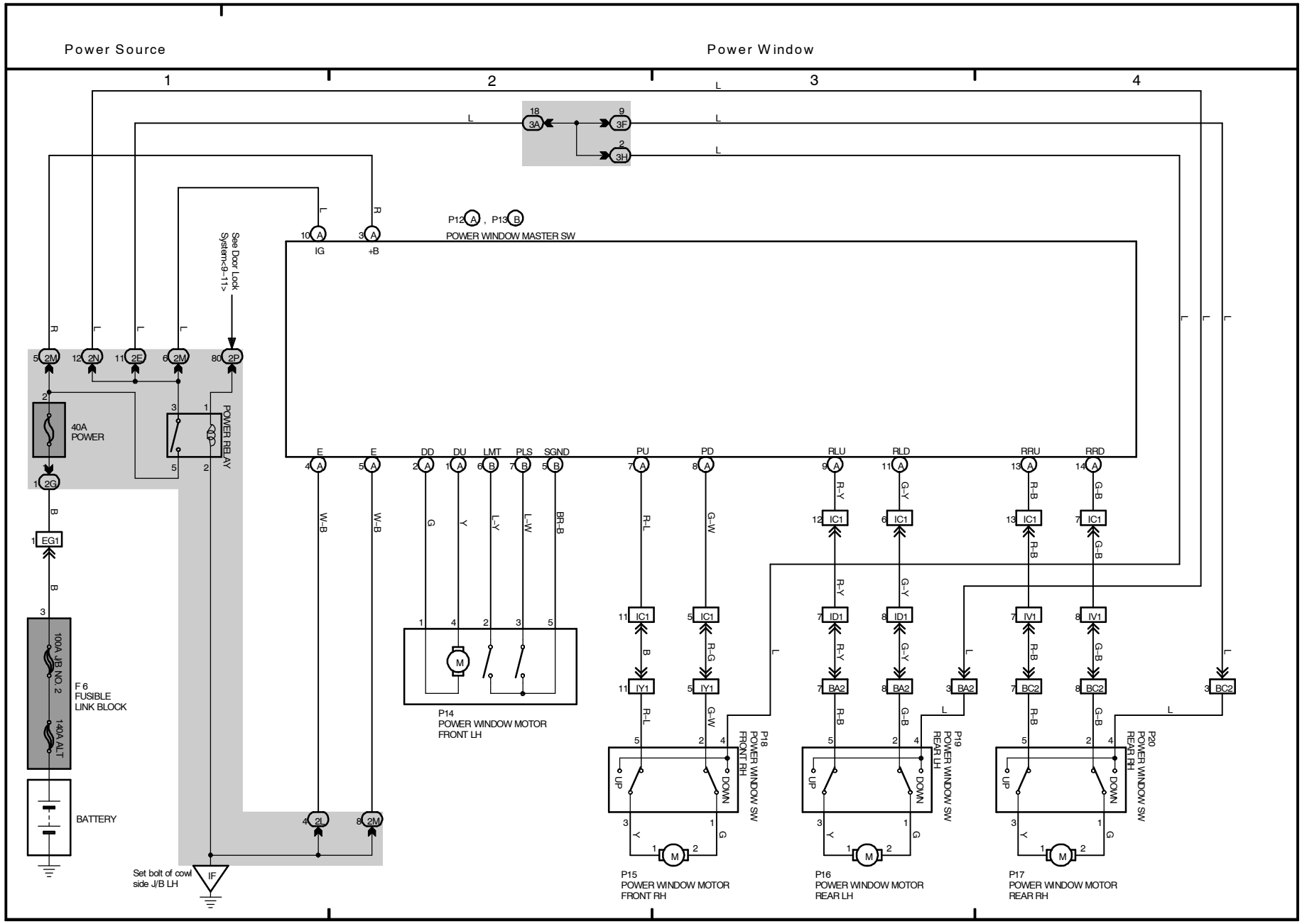
Power Source
Power Window
1
2
3
4
3A
3F
3H
P12 A , P13 B
POWER WINDOW MASTER SW
IG
+B
See Door Lock System<9-11>
2M
2N
2E
2P
40A POWER
POWER RELAY
2G
EG1
F 6 FUSIBLE LINK BLOCK
100A J/B NO. 2
140A ALT
BATTERY
2L
IF
Set bolt of cowl side J/B LH
E
DD
DU
LMT
PLS
SGND
PU
PD
RLU
RLD
RRU
RRD
P14 POWER WINDOW MOTOR FRONT LH
P15 POWER WINDOW MOTOR FRONT RH
P16 POWER WINDOW MOTOR REAR LH
P17 POWER WINDOW MOTOR REAR RH
P18 POWER WINDOW SW FRONT RH
P19 POWER WINDOW SW REAR LH
P20 POWER WINDOW SW REAR RH
IC1
IY1
ID1
IV1
BA2
BC2
UP
DOWN

19 LAND CRUISER

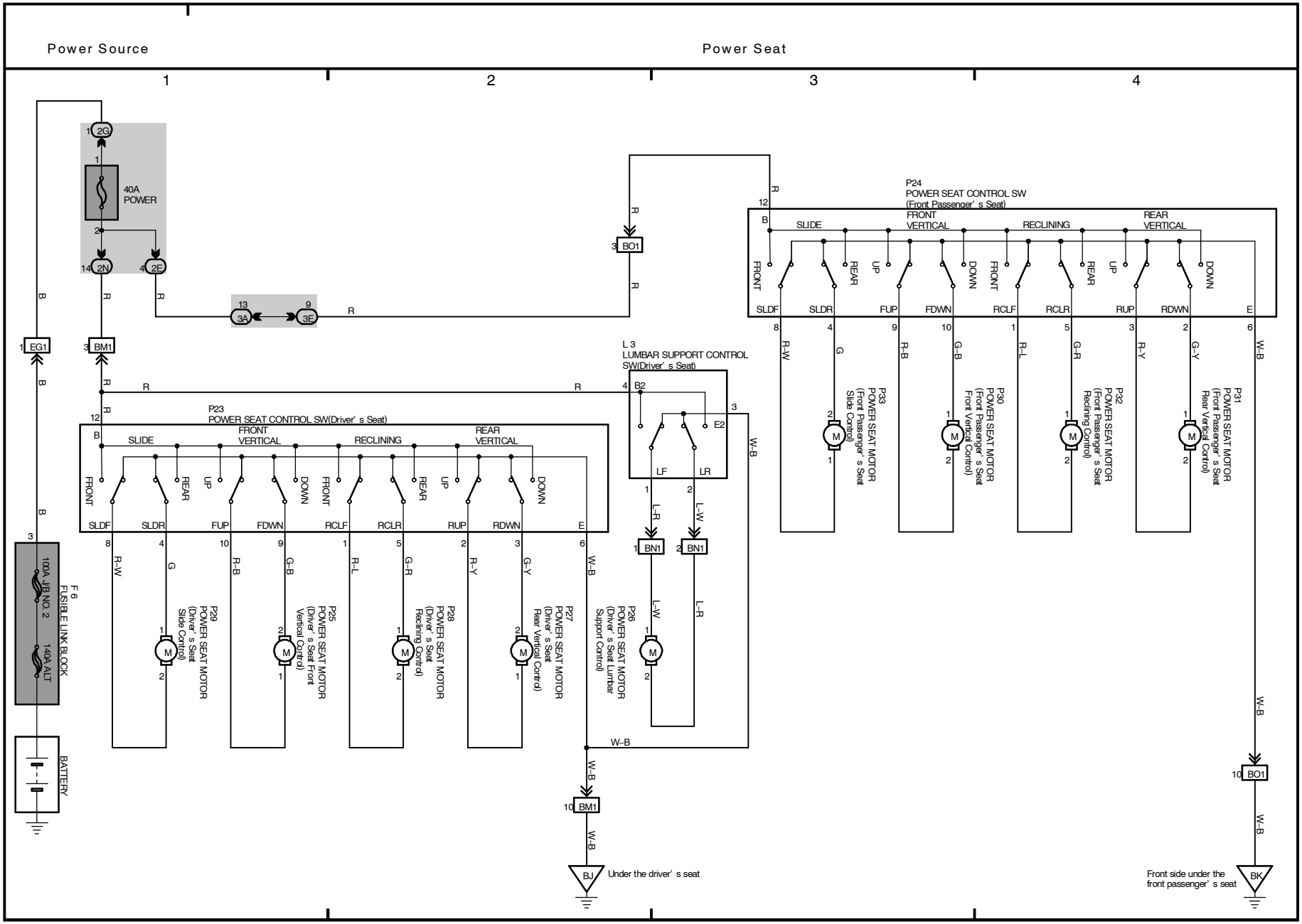

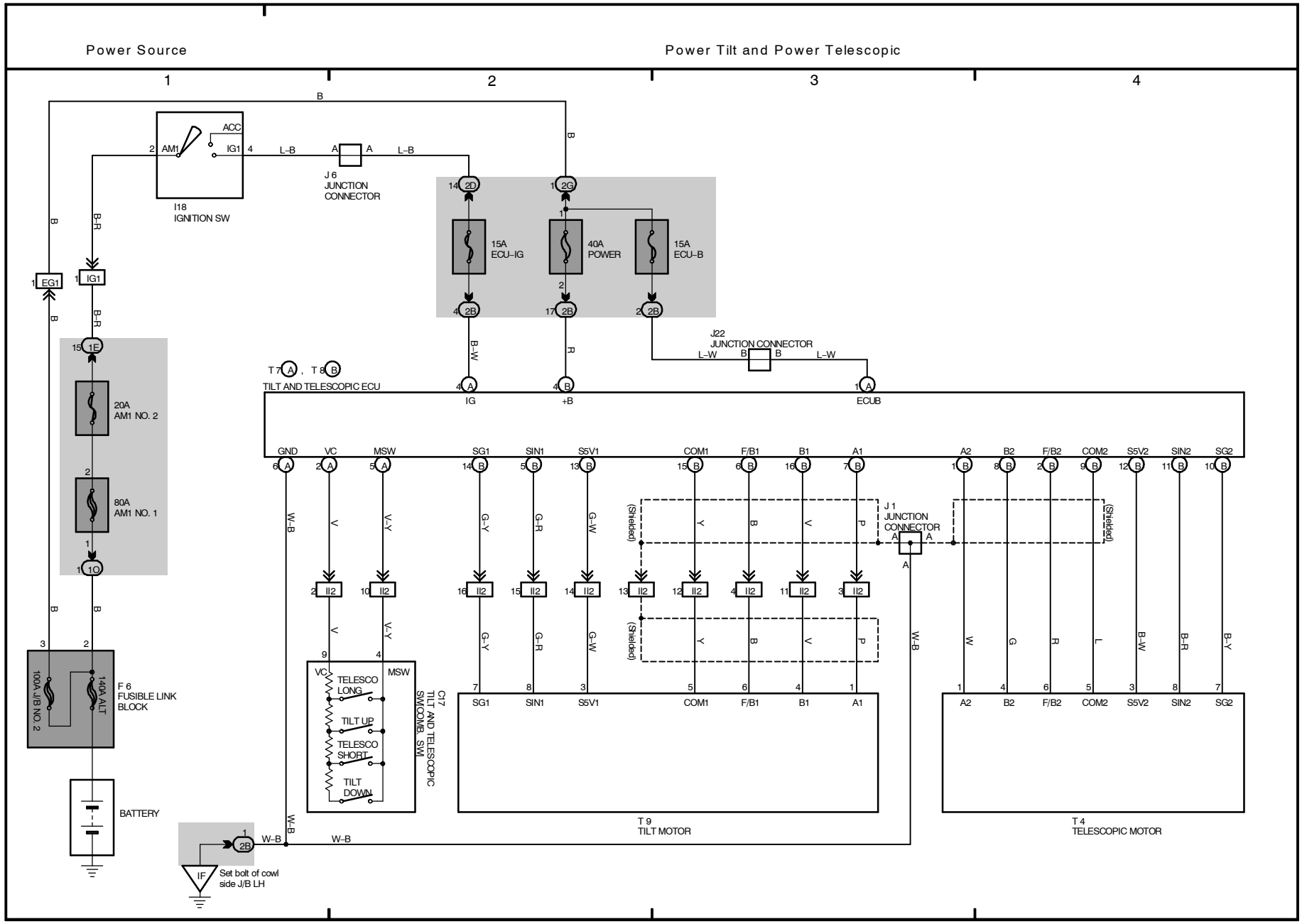
Power Source
Power Tilt and Power Telescopic
1
2
3
4
ACC
AM1
IG1
I18
IGNITION SW
J 6
JUNCTION
CONNECTOR
15A
ECU–IG
40A
POWER
15A
ECU–B
EG1
IG1
20A
AM1 NO. 2
80A
AM1 NO. 1
J22
JUNCTION CONNECTOR
T 7 , T 8
TILT AND TELESCOPIC ECU
IG
+B
ECUB
GND
VC
MSW
SG1
SIN1
S5V1
COM1
F/B1
B1
A1
A2
B2
F/B2
COM2
S5V2
SIN2
SG2
J 1
JUNCTION
CONNECTOR
(Shielded)
TELESCO
LONG
TILT UP
TELESCO
SHORT
TILT
DOWN
C17
TILT AND TELESCOPIC
SW(COMB. SW)
T 9
TILT MOTOR
T 4
TELESCOPIC MOTOR
100A J/B NO. 2
140A ALT
F 6
FUSIBLE LINK
BLOCK
BATTERY
IF
Set bolt of cowl
side J/B LH

21 LAND CRUISER

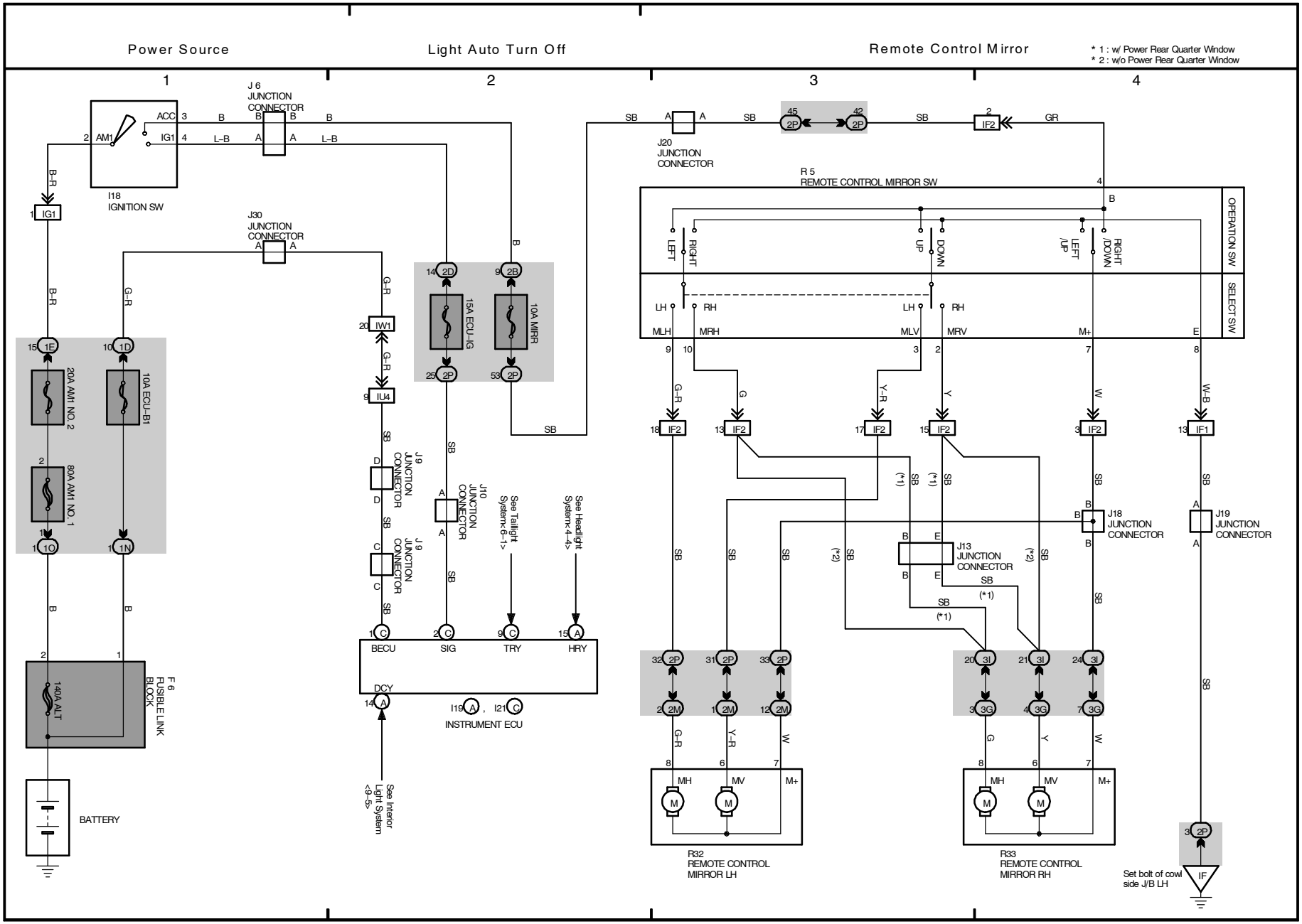

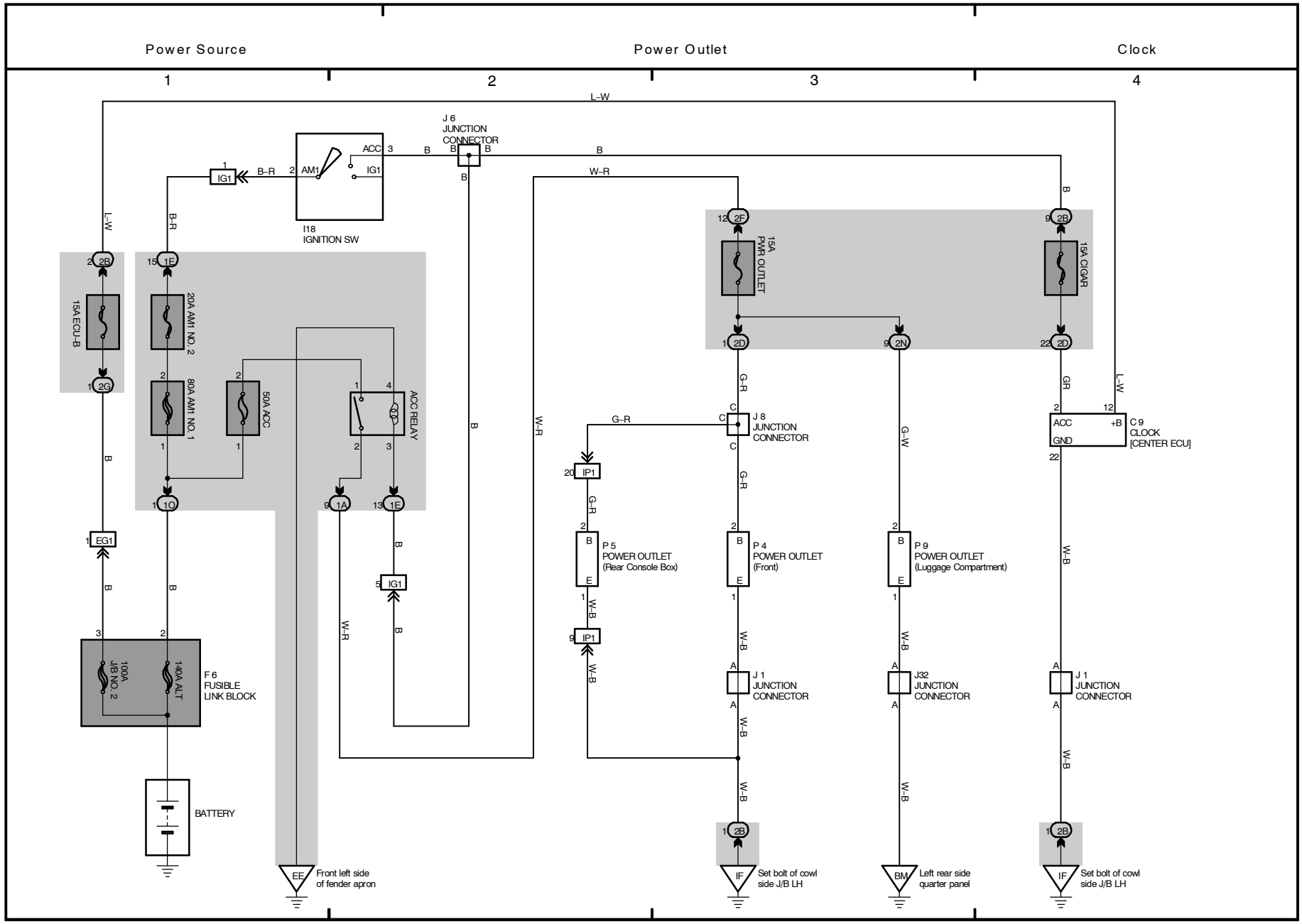
Power Source
Power Outlet
Clock
1
2
3
4
L–W
J 6
JUNCTION
CONNECTOR
ACC
AM1
IG1
I18
IGNITION SW
B–R
B
W–R
15A ECU–B
20A AM1 NO. 2
80A AM1 NO. 1
50A ACC
ACC RELAY
15A PWR OUTLET
15A CIGAR
G–R
G–W
GR
J 8
JUNCTION
CONNECTOR
C 9
CLOCK
[CENTER ECU]
ACC
GND
+B
P 5
POWER OUTLET
(Rear Console Box)
P 4
POWER OUTLET
(Front)
P 9
POWER OUTLET
(Luggage Compartment)
W–B
J 1
JUNCTION
CONNECTOR
J32
JUNCTION
CONNECTOR
F 6
FUSIBLE
LINK BLOCK
100A
J/B NO. 2
140A ALT
BATTERY
Front left side
of fender apron
Set bolt of cowl
side J/B LH
Left rear side
quarter panel

23 LAND CRUISER

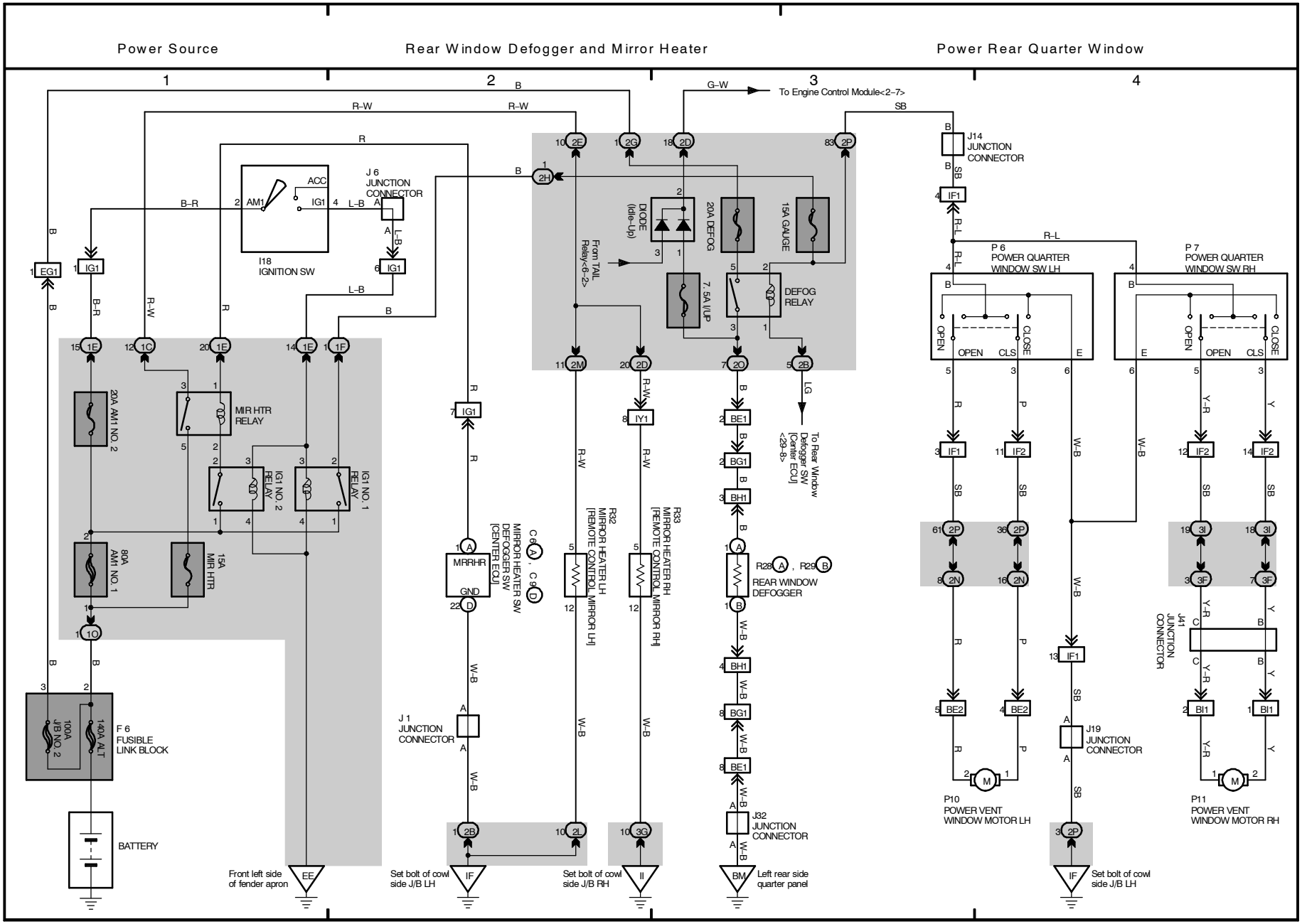

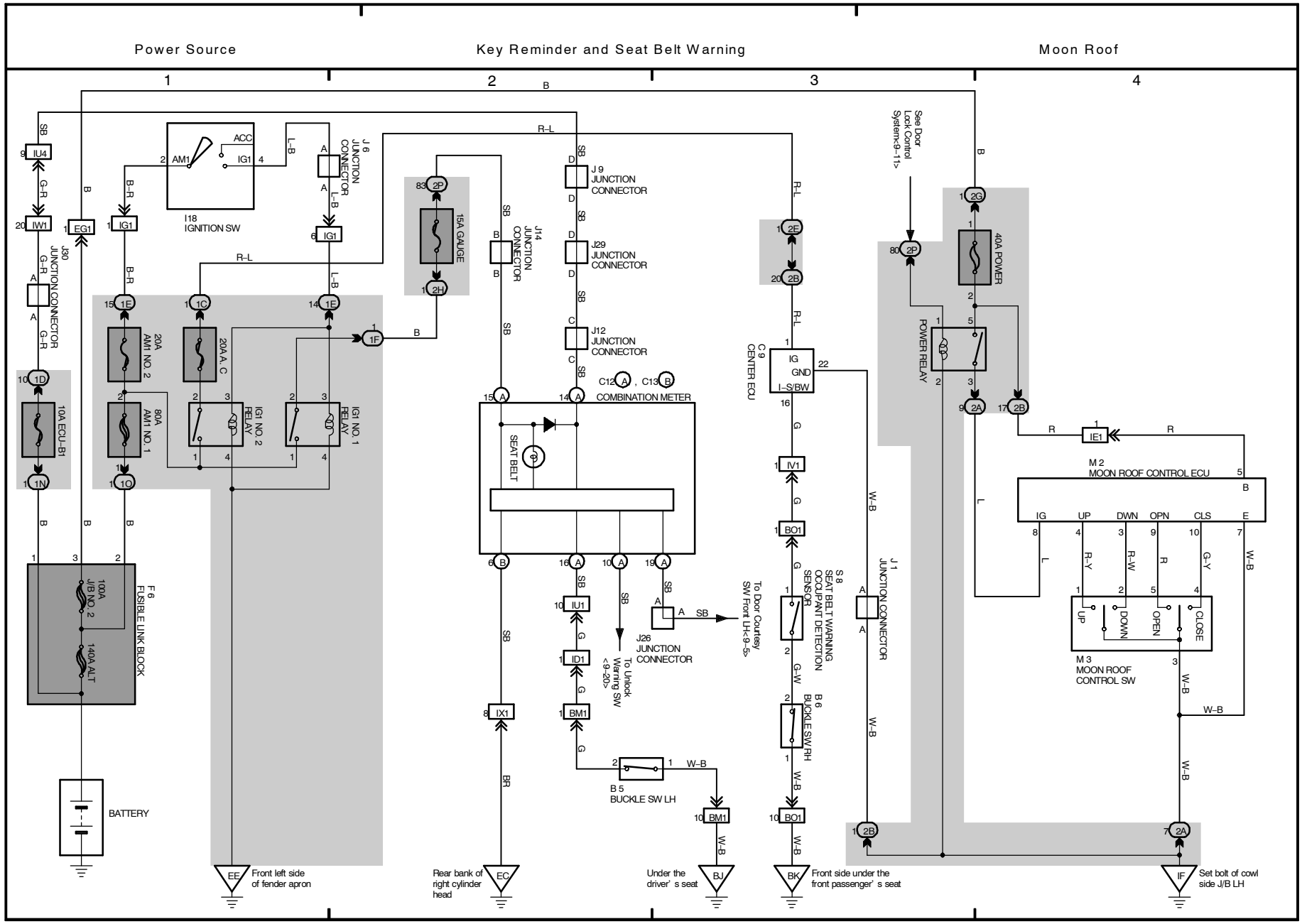
Power Source
Key Reminder and Seat Belt Warning
Moon Roof
1
2
3
4
I18
IGNITION SW
ACC
AM1
IG1
J 6
JUNCTION
CONNECTOR
J30
JUNCTION CONNECTOR
IU4
IW1
EG1
IG1
10A ECU-B1
20A
AM1 NO. 2
80A
AM1 NO. 1
20A A. C
IG1 NO. 2
RELAY
IG1 NO. 1
RELAY
15A GAUGE
J14
JUNCTION
CONNECTOR
J 9
JUNCTION
CONNECTOR
J29
JUNCTION
CONNECTOR
J12
JUNCTION
CONNECTOR
C12 A , C13 B
COMBINATION METER
SEAT BELT
F 6
FUSIBLE LINK BLOCK
100A
J/B NO. 2
140A ALT
BATTERY
IU1
ID1
BM1
IX1
J26
JUNCTION
CONNECTOR
To Door Courtesy
SW Front LH<9~5>
To Unlock
Warning SW
<9~20>
B 5
BUCKLE SW LH
C 9
CENTER ECU
IG
GND
I-S/BW
IV1
BO1
S 8
SEAT BELT WARNING
OCCUPANT DETECTION
SENSOR
B 6
BUCKLE SW RH
J 1
JUNCTION CONNECTOR
See Door
Lock Control
System<9~11>
40A POWER
POWER RELAY
IE1
M 2
MOON ROOF CONTROL ECU
IG
UP
DWN
OPN
CLS
E
M 3
MOON ROOF
CONTROL SW
UP
DOWN
OPEN
CLOSE
EE
Front left side
of fender apron
EC
Rear bank of
right cylinder
head
BJ
Under the
driver' s seat
BK
Front side under the
front passenger' s seat
IF
Set bolt of cowl
side J/B LH

25 LAND CRUISER

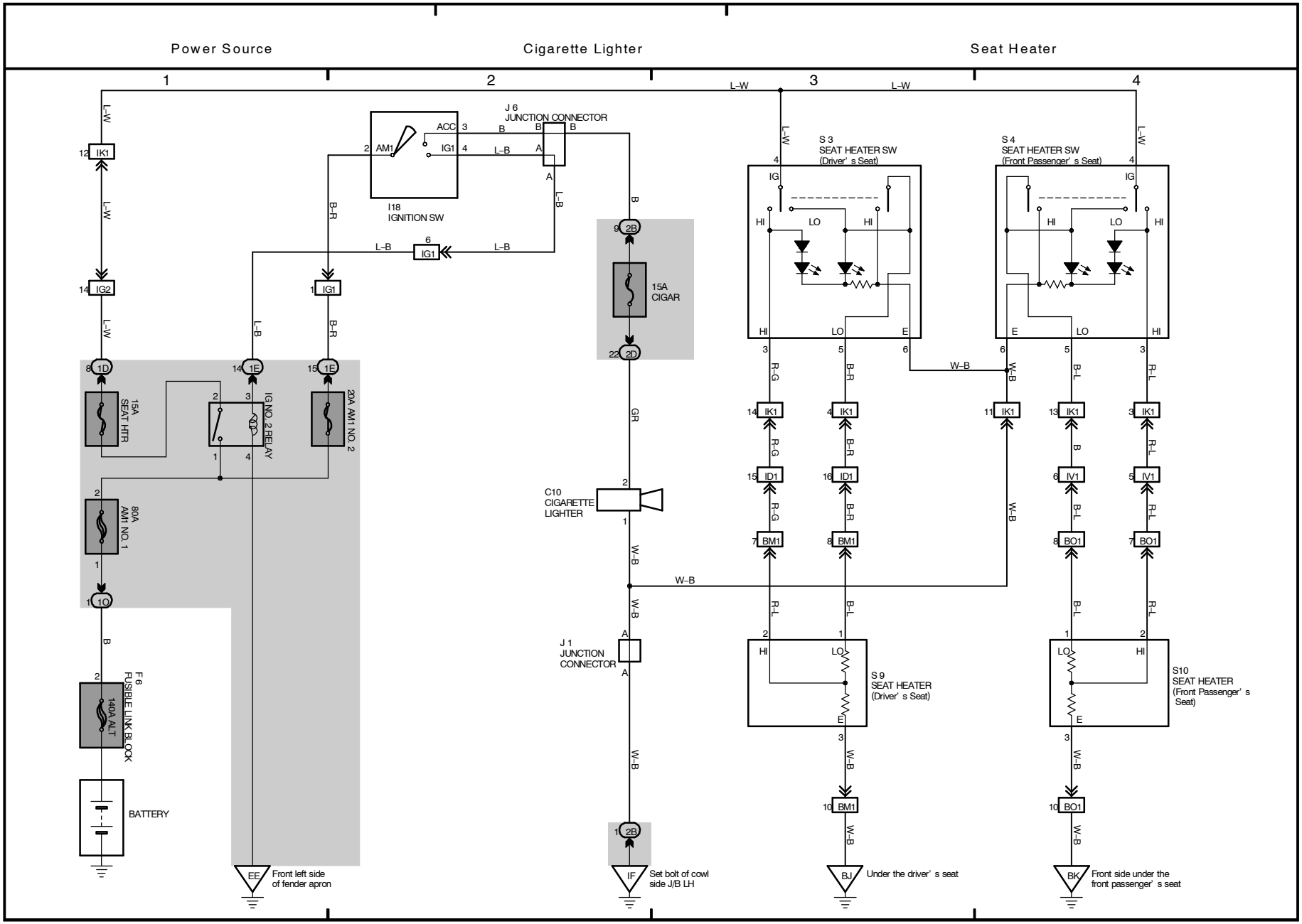

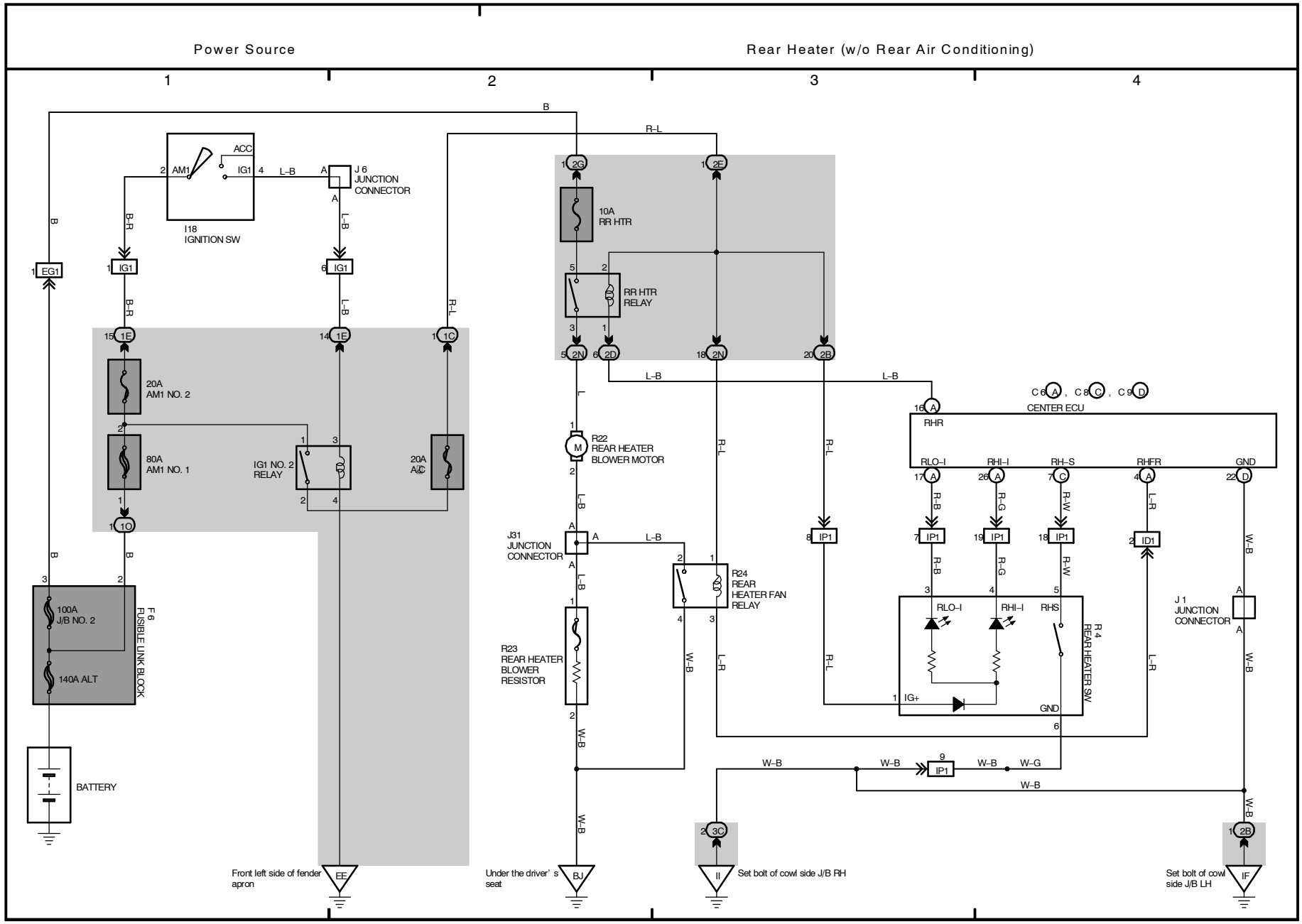
Power Source
Rear Heater (w/o Rear Air Conditioning)
1
2
3
4
ACC
AM1
IG1
I18
IGNITION SW
J 6
JUNCTION
CONNECTOR
EG1
IG1
20A
AM1 NO. 2
80A
AM1 NO. 1
IG1 NO. 2
RELAY
20A
A/C
100A
J/B NO. 2
140A ALT
F 6
FUSIBLE LINK BLOCK
BATTERY
10A
RR HTR
RR HTR
RELAY
R22
REAR HEATER
BLOWER MOTOR
J31
JUNCTION
CONNECTOR
R24
REAR
HEATER FAN
RELAY
R23
REAR HEATER
BLOWER
RESISTOR
C 6 A , C 8 C , C 9 D
CENTER ECU
RHR
RLO–I
RHI–I
RH–S
RHFR
GND
IP1
ID1
RLO–I
RHI–I
RHS
IG+
GND
R 4
REAR HEATER SW
J 1
JUNCTION
CONNECTOR
Front left side of fender
apron
EE
Under the driver' s
seat
BJ
II
Set bolt of cowl side J/B RH
Set bolt of cowl
side J/B LH
IF

27 LAND CRUISER

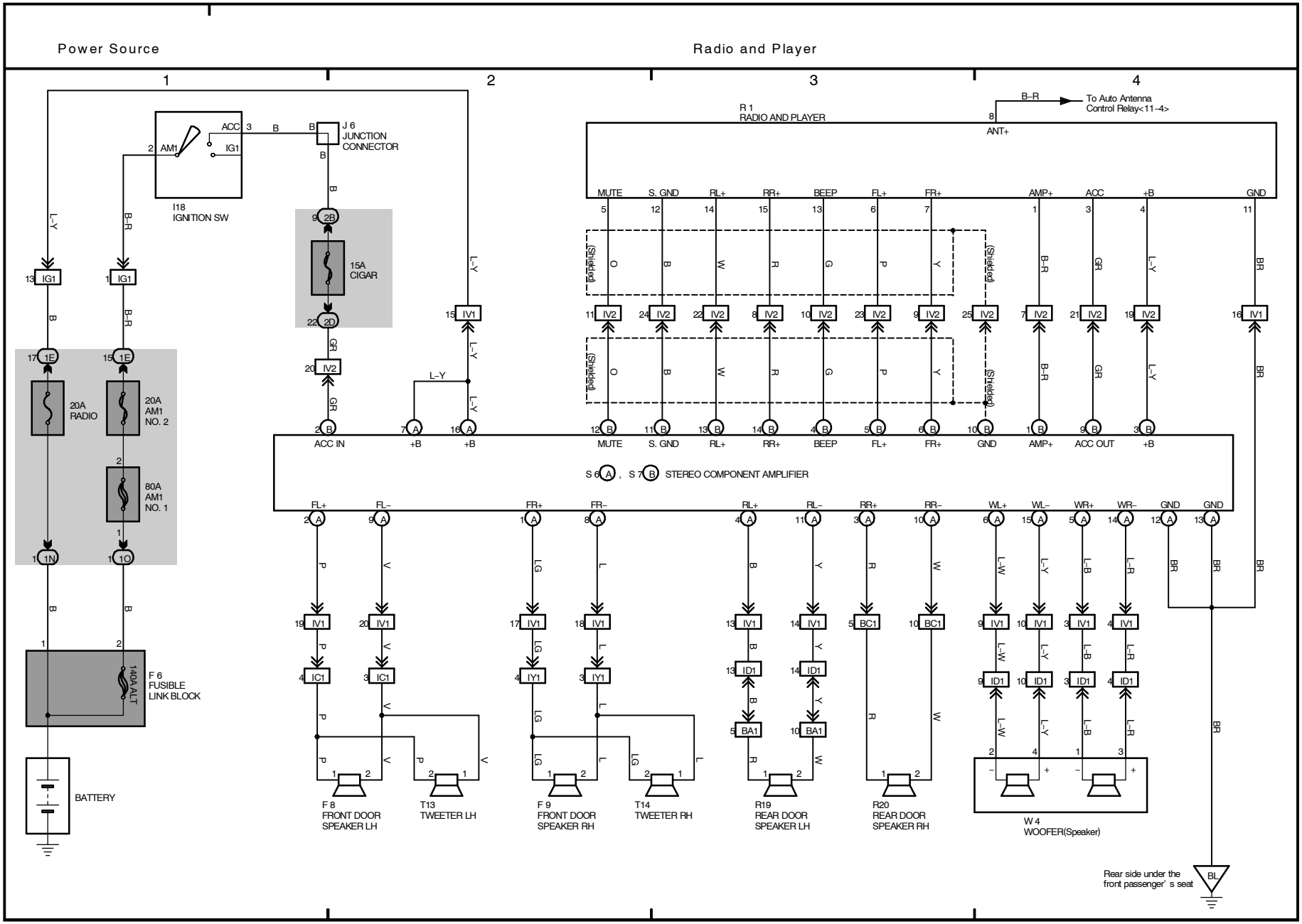

(Cont. next page)

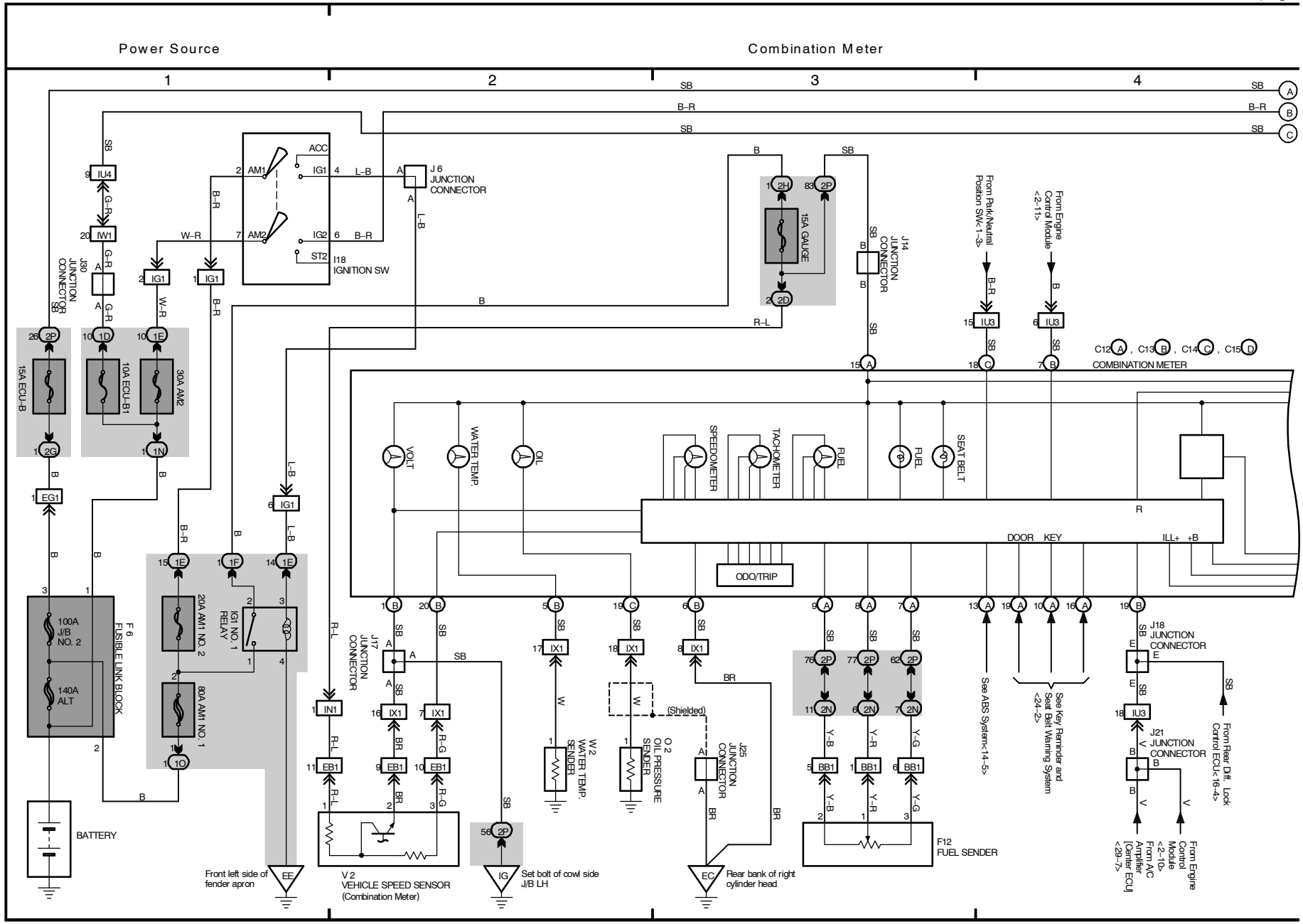

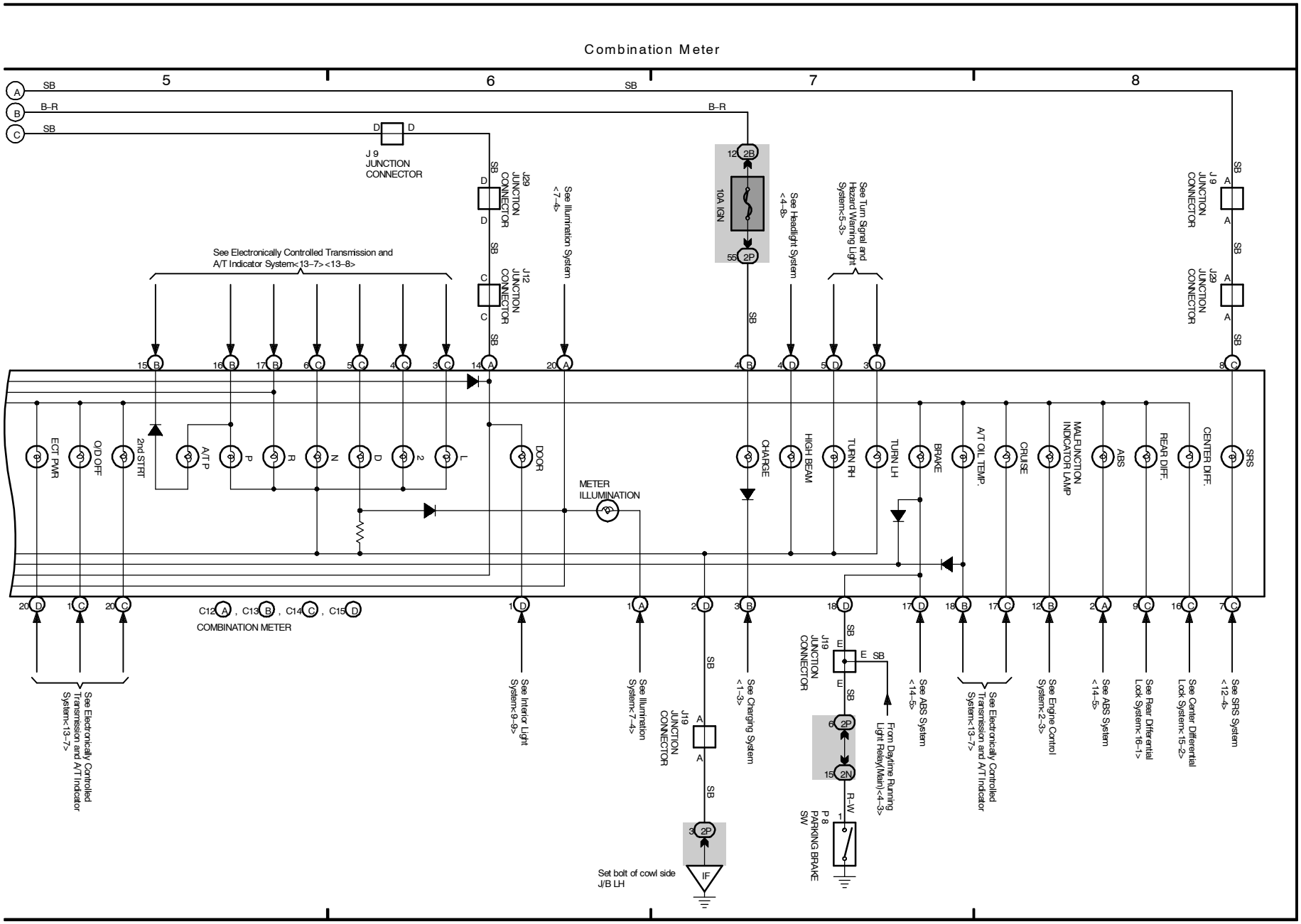
Combination Meter
5
6
7
8
SB
B–R
J 9 JUNCTION CONNECTOR
J29 JUNCTION CONNECTOR
J12 JUNCTION CONNECTOR
See Illumination System <7–4>
10A IGN
See Headlight System <4–8>
See Turn Signal and Hazard Warning Light System<5–3>
See Electronically Controlled Transmission and A/T Indicator System<13–7> <13–8>
ECT PWR
O/D OFF
2nd STRT
A/T P
P
R
N
D
2
L
DOOR
METER ILLUMINATION
CHARGE
HIGH BEAM
TURN RH
TURN LH
BRAKE
A/T OIL TEMP.
CRUISE
MALFUNCTION INDICATOR LAMP
ABS
REAR DIFF.
CENTER DIFF.
SRS
C12 A , C13 B , C14 C , C15 D
COMBINATION METER
See Electronically Controlled Transmission and A/T Indicator System<13–7>
See Interior Light System<9–9>
See Illumination System<7–4>
J19 JUNCTION CONNECTOR
See Charging System <1–3>
J19 JUNCTION CONNECTOR
From Daytime Running Light Relay(Main)<4–3>
P 8 PARKING BRAKE SW
R–W
Set bolt of cowl side J/B LH
IF
See ABS System <14–5>
See Electronically Controlled Transmission and A/T Indicator System<13–7>
See Engine Control System<2–3>
See ABS System <14–5>
See Rear Differential Lock System<16–1>
See Center Differential Lock System<15–2>
See SRS System <12–4>

29 LAND CRUISER

(Cont. next page)

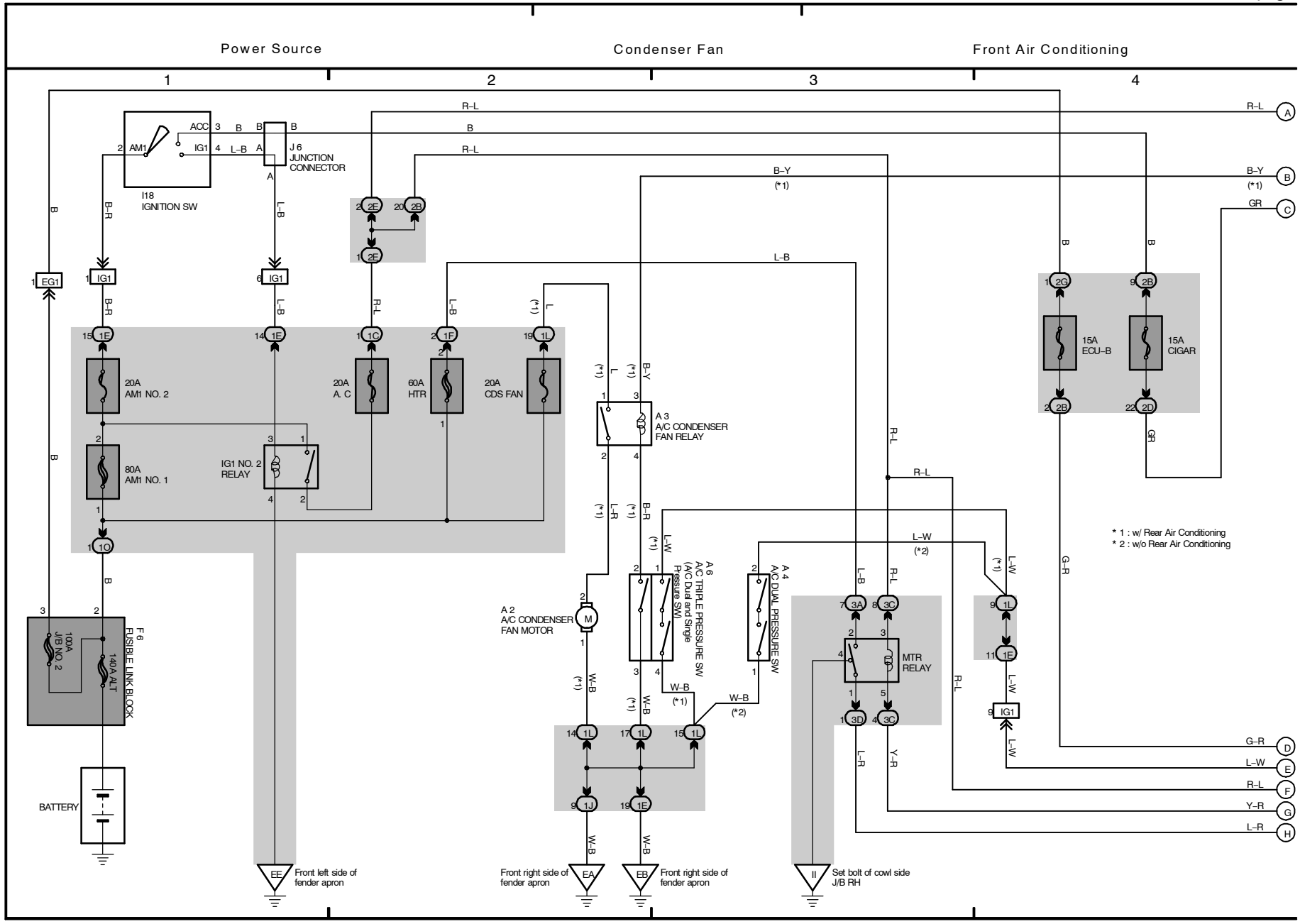

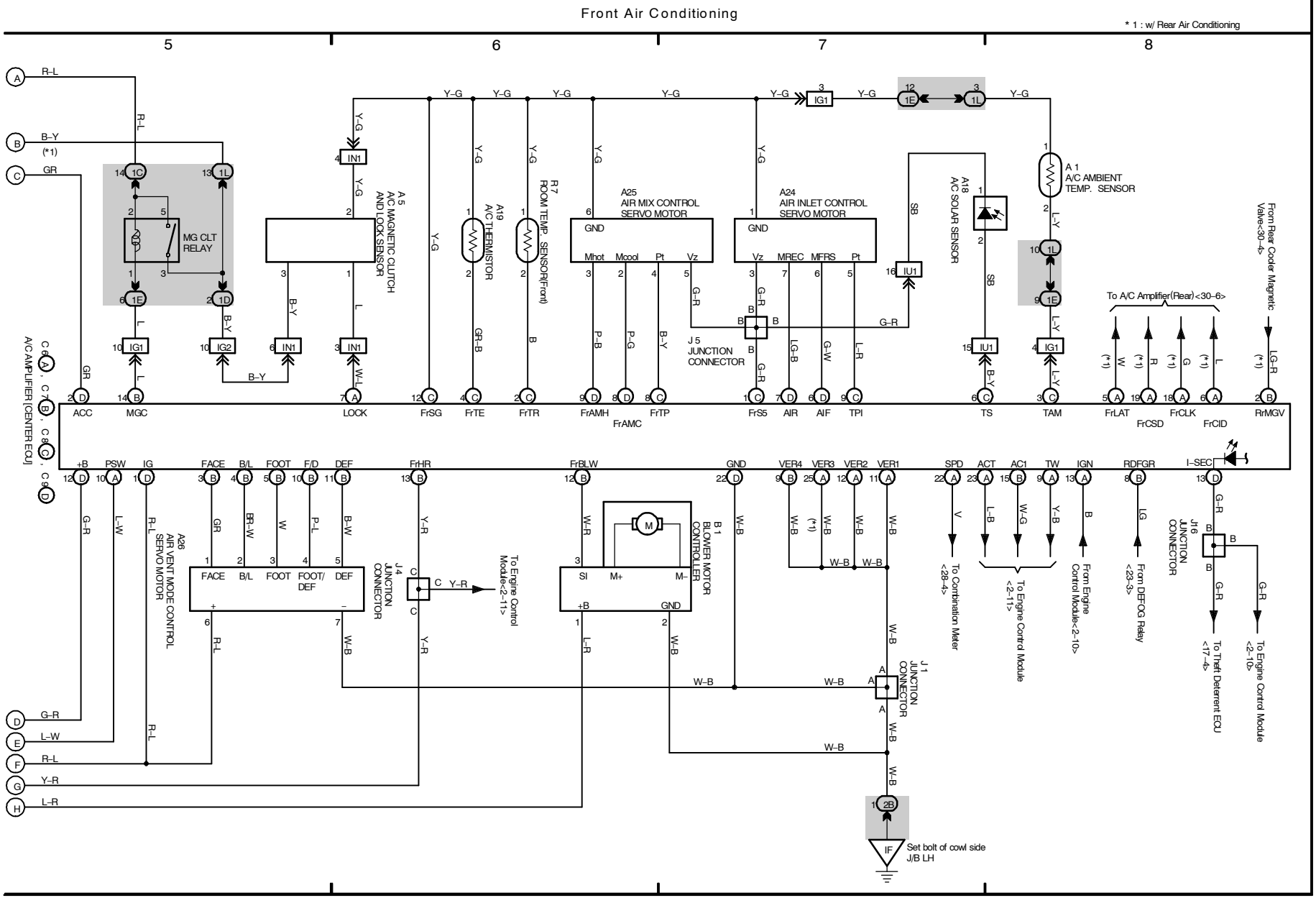
Front Air Conditioning
* 1 : w/ Rear Air Conditioning
5
6
7
8
MG CLT RELAY
A 5 A/C MAGNETIC CLUTCH AND LOCK SENSOR
A19 A/C THERMISTOR
R7 ROOM TEMP. SENSOR(Front)
A25 AIR MIX CONTROL SERVO MOTOR
A24 AIR INLET CONTROL SERVO MOTOR
A18 A/C SOLAR SENSOR
A 1 A/C AMBIENT TEMP. SENSOR
J 5 JUNCTION CONNECTOR
To A/C Amplifier(Rear)<30–6>
From Rear Cooler Magnetic Valve<30–4>
A/C AMPLIFIER (CENTER ECU)
ACC
MGC
LOCK
FrSG
FrTE
FrTR
FrAMH
FrAMC
FrTP
FrS5
AIR
AIF
TPI
TS
TAM
FrLAT
FrCSD
FrCLD
FrCLK
RrMGV
+B
PSW
IG
FACE
B/L
FOOT
F/D
DEF
FrHR
FrBLW
GND
VER4
VER3
VER2
VER1
SPD
ACT
AC1
TW
IGN
RDFGR
I–SEC
A26 AIR VENT MODE CONTROL SERVO MOTOR
J4 JUNCTION CONNECTOR
To Engine Control Module<2–11>
B1 BLOWER MOTOR CONTROLLER
J1 JUNCTION CONNECTOR
To Combination Meter <28–4>
To Engine Control Module <2–11>
From Engine Control Module<2–10>
From DEFOG Relay <23–3>
J16 JUNCTION CONNECTOR
To Theft Deterrent ECU <17–4>
To Engine Control Module <2–10>
Set bolt of cowl side J/B LH

30 LAND CRUISER

(Cont. next page)

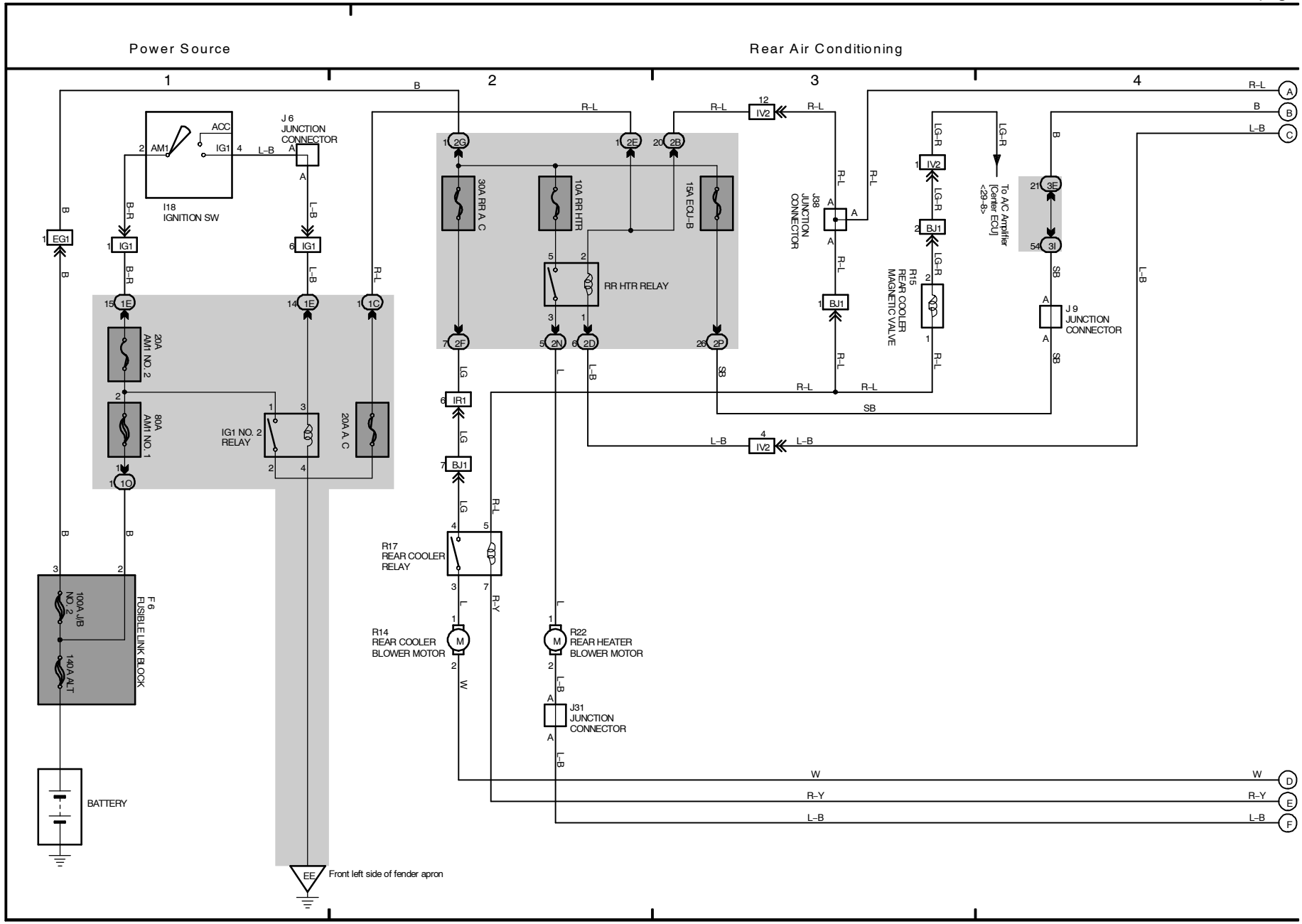

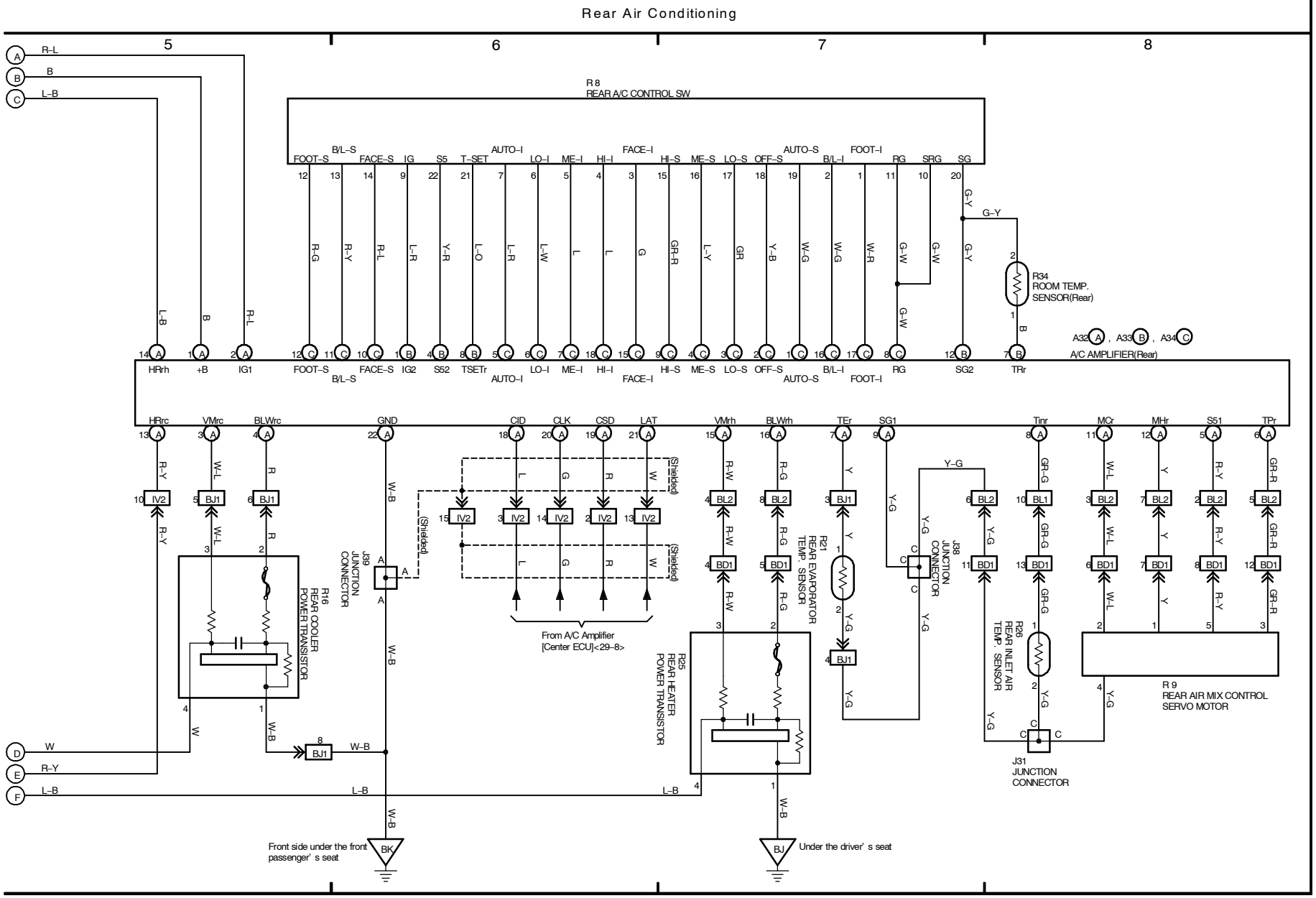
Rear Air Conditioning
5
6
7
8
R8
REAR A/C CONTROL SW
FOOT–S
B/L–S
FACE–S
IG
S5
T–SET
AUTO–I
LO–I
ME–I
HI–I
FACE–I
HI–S
ME–S
LO–S
OFF–S
AUTO–S
B/L–I
FOOT–I
RG
SRG
SG
R34
ROOM TEMP.
SENSOR(Rear)
A32 A , A33 B , A34 C
A/C AMPLIFIER(Rear)
HRrh
+B
IG1
IG2
S52
TSETr
SG2
TRr
HRrc
VMrc
BLWrc
GND
CID
CLK
CSD
LAT
VMrh
BLWrh
TEr
SG1
Tinr
MCr
MHr
S51
TPr
(Shielded)
From A/C Amplifier
[Center ECU]<29–8>
R16
REAR COOLER
POWER TRANSISTOR
J39
JUNCTION
CONNECTOR
R25
REAR HEATER
POWER TRANSISTOR
R21
REAR EVAPORATOR
TEMP. SENSOR
J38
JUNCTION
CONNECTOR
R26
REAR INLET AIR
TEMP. SENSOR
R 9
REAR AIR MIX CONTROL
SERVO MOTOR
J31
JUNCTION
CONNECTOR
Front side under the front
passenger' s seat
Under the driver' s seat