ENGINE UNIT

COMPONENTS

EM0LB–06

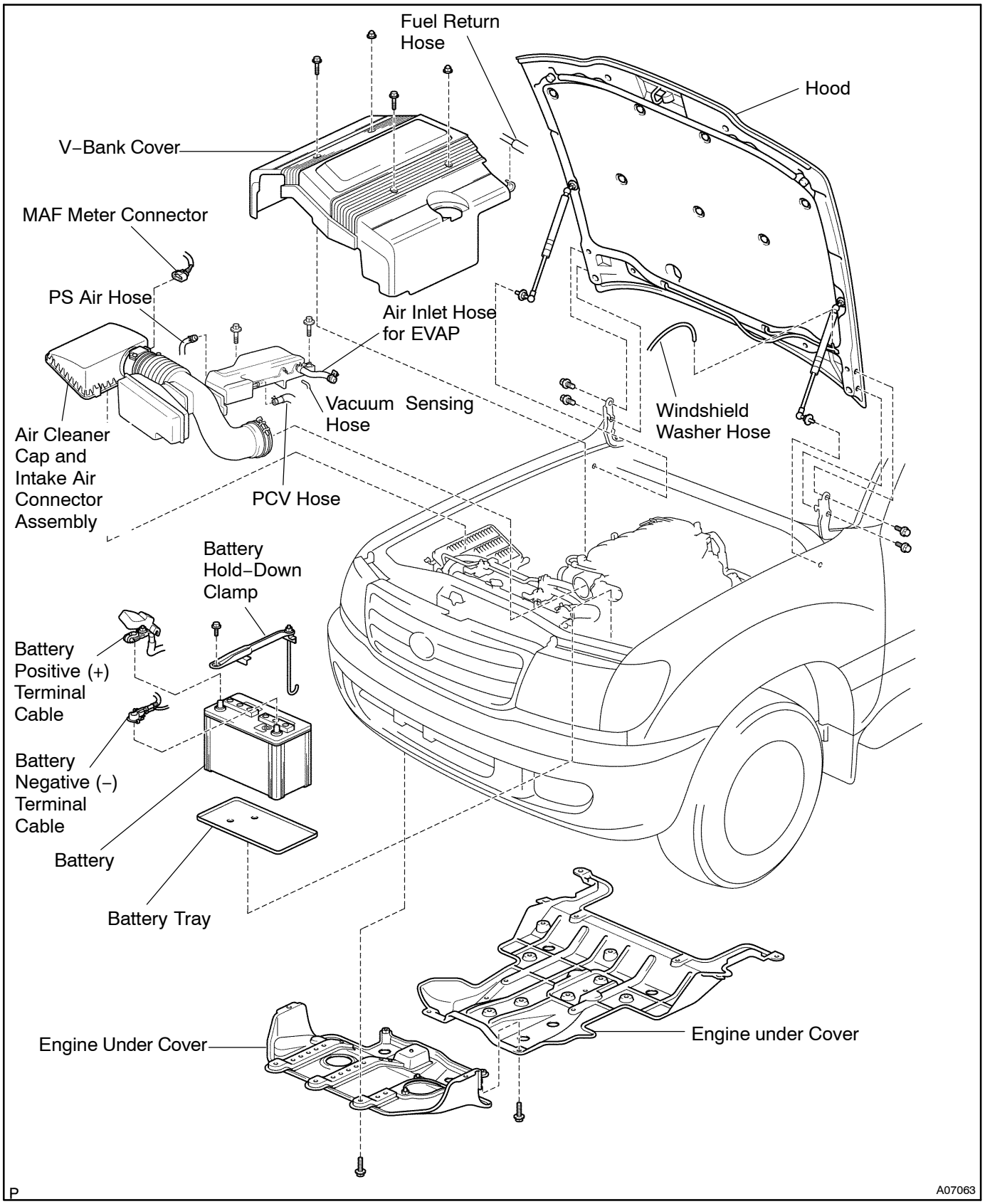

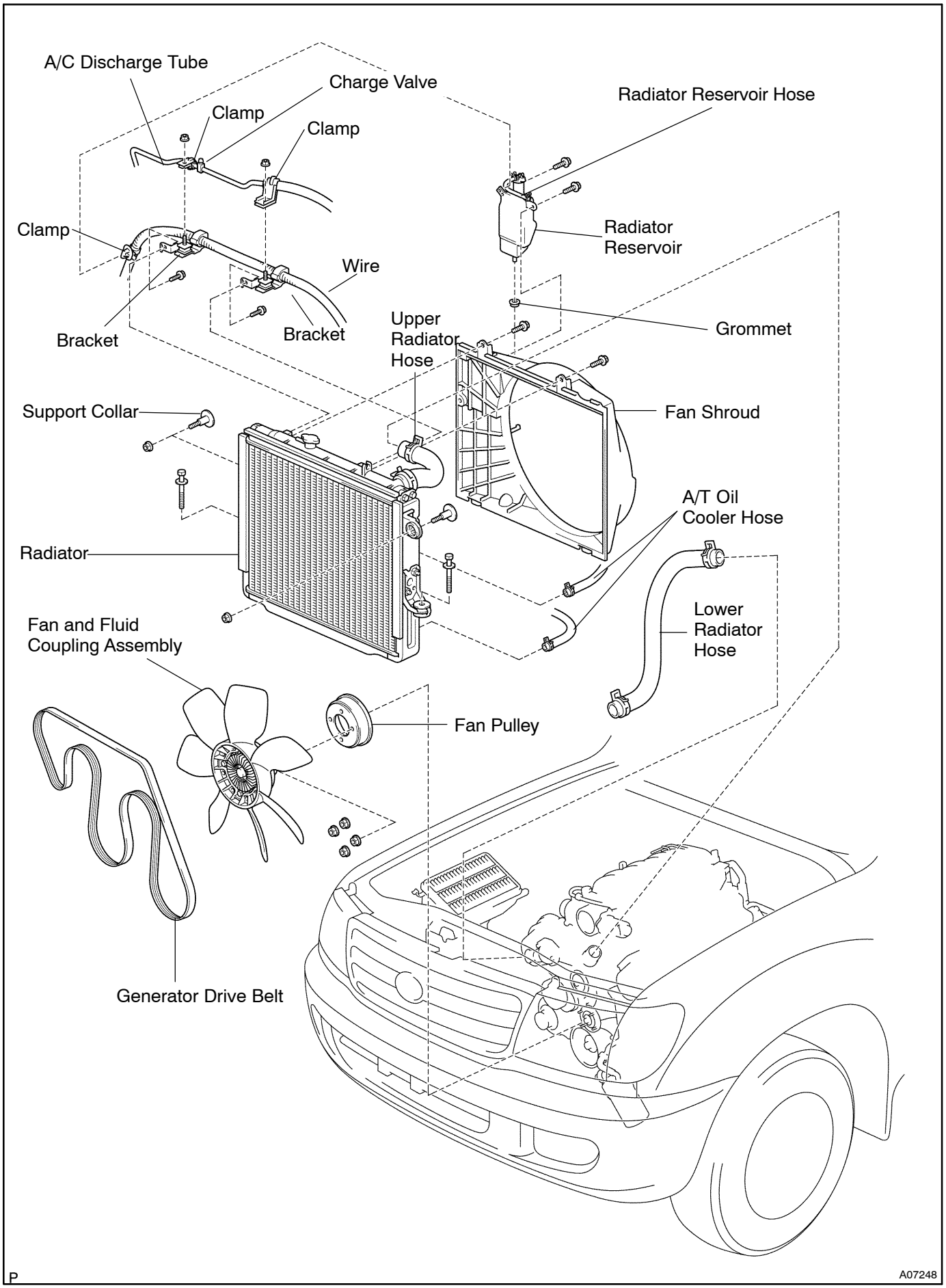
A/C Discharge Tube
Charge Valve
Clamp
Clamp
Radiator Reservoir Hose
Clamp
Radiator Reservoir
Wire
Bracket
Bracket
Upper Radiator Hose
Grommet
Support Collar
Fan Shroud
A/T Oil Cooler Hose
Radiator
Lower Radiator Hose
Fan and Fluid Coupling Assembly
Fan Pulley
Generator Drive Belt
P
A07248

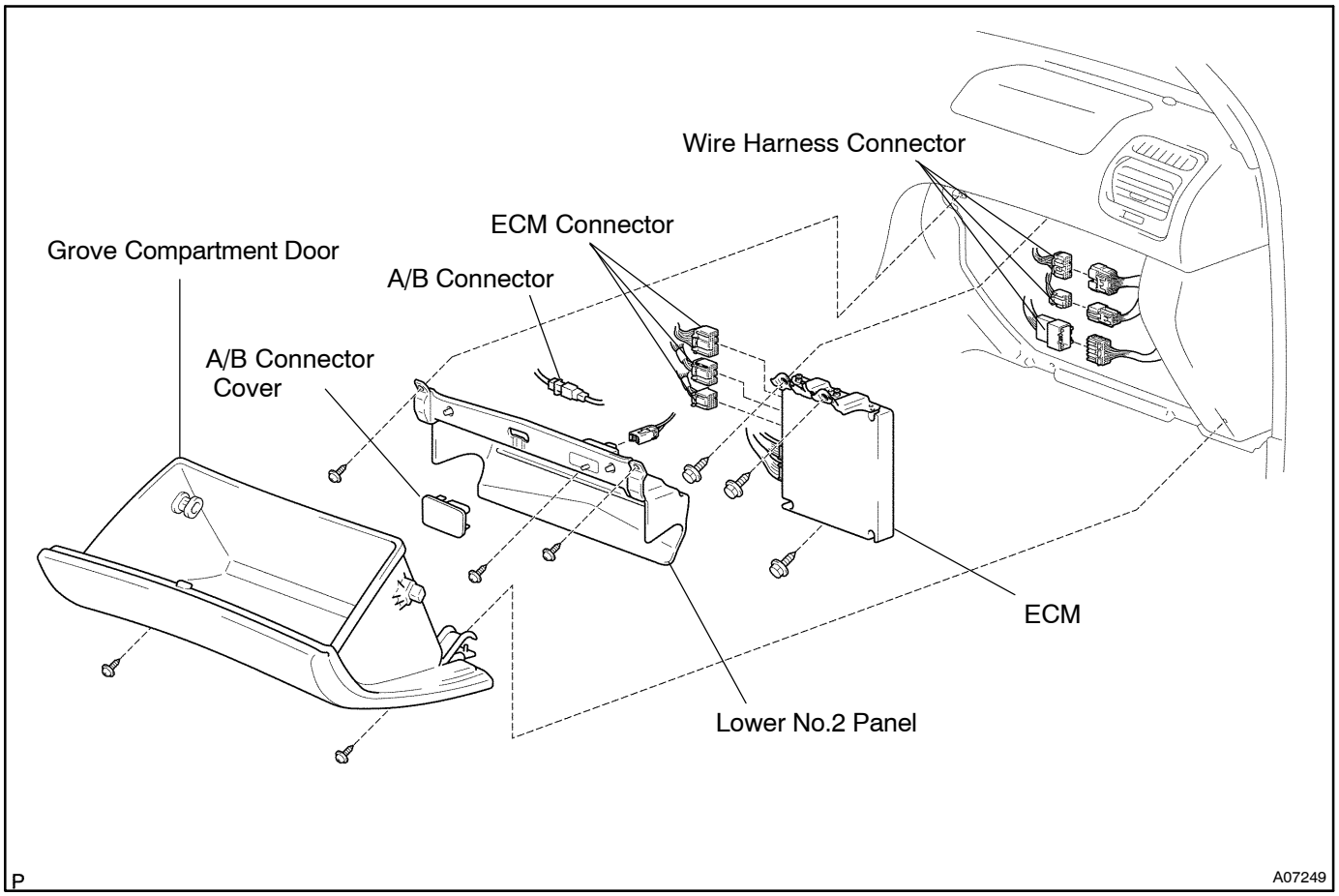
Wire Harness Connector
ECM Connector
Grove Compartment Door
A/B Connector
A/B Connector
Cover
ECM
Lower No.2 Panel
P
A07249

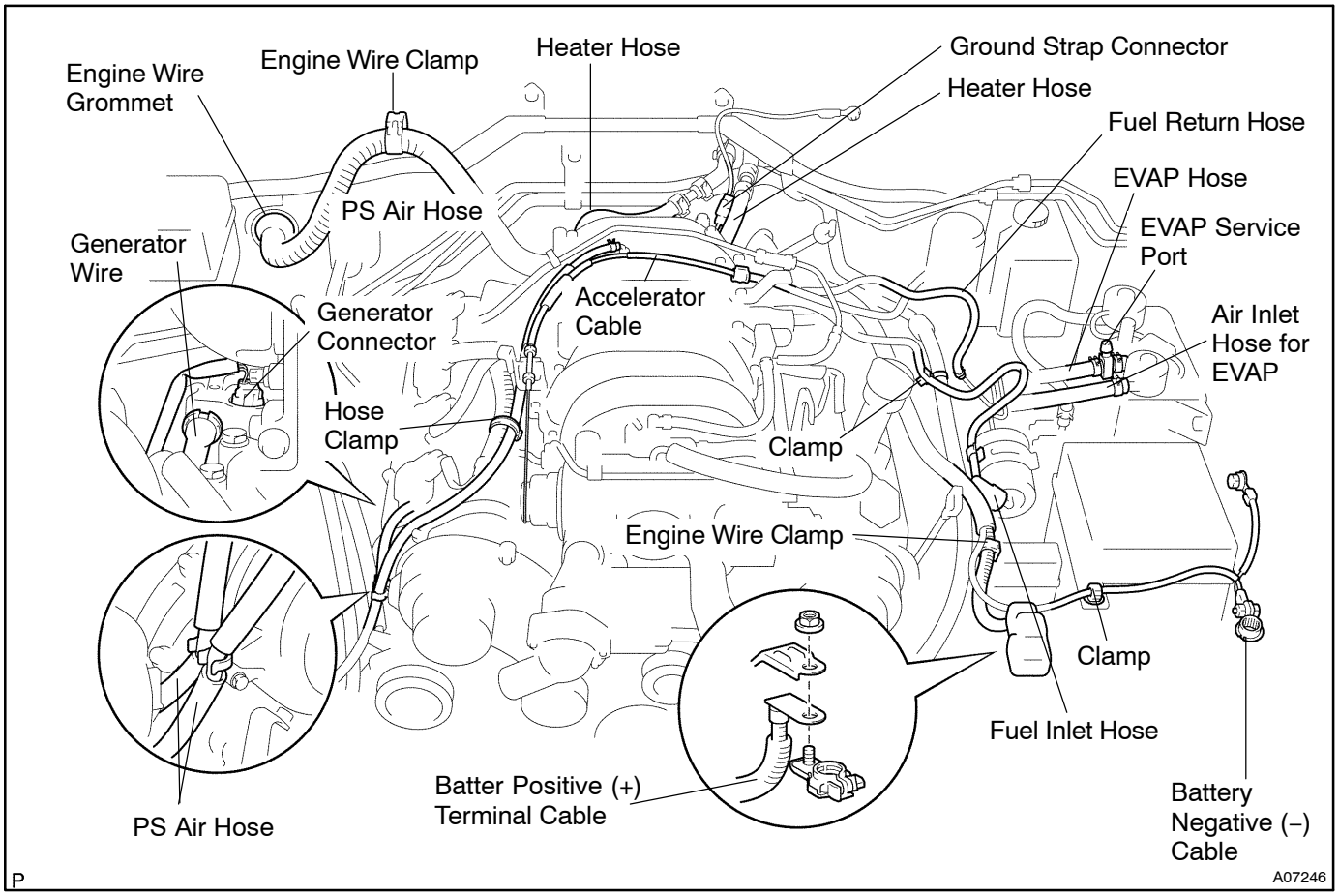
Engine Wire
Grommet
Engine Wire Clamp
Heater Hose
Ground Strap Connector
Heater Hose
Fuel Return Hose
EVAP Hose
PS Air Hose
EVAP Service
Port
Generator
Wire
Generator
Connector
Accelerator
Cable
Air Inlet
Hose for
EVAP
Hose
Clamp
Clamp
Engine Wire Clamp
Clamp
Fuel Inlet Hose
Batter Positive (+)
Terminal Cable
Battery
Negative (–)
Cable
PS Air Hose
P
A07246

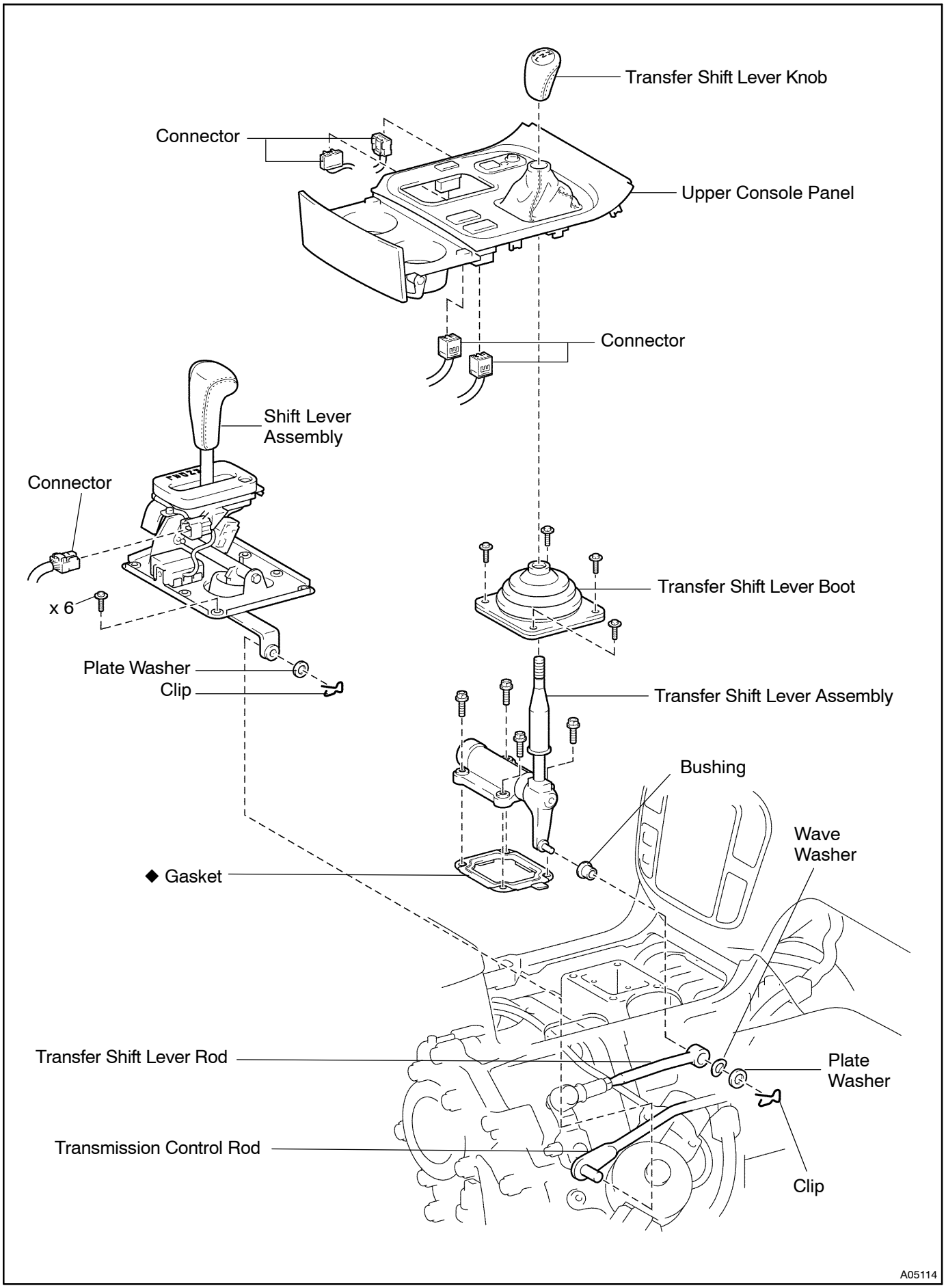
Transfer Shift Lever Knob
Connector
Upper Console Panel
Connector
Shift Lever Assembly
Connector
x 6
Transfer Shift Lever Boot
Plate Washer
Clip
Transfer Shift Lever Assembly
Bushing
Wave Washer
◆ Gasket
Transfer Shift Lever Rod
Plate Washer
Transmission Control Rod
Clip
A05114

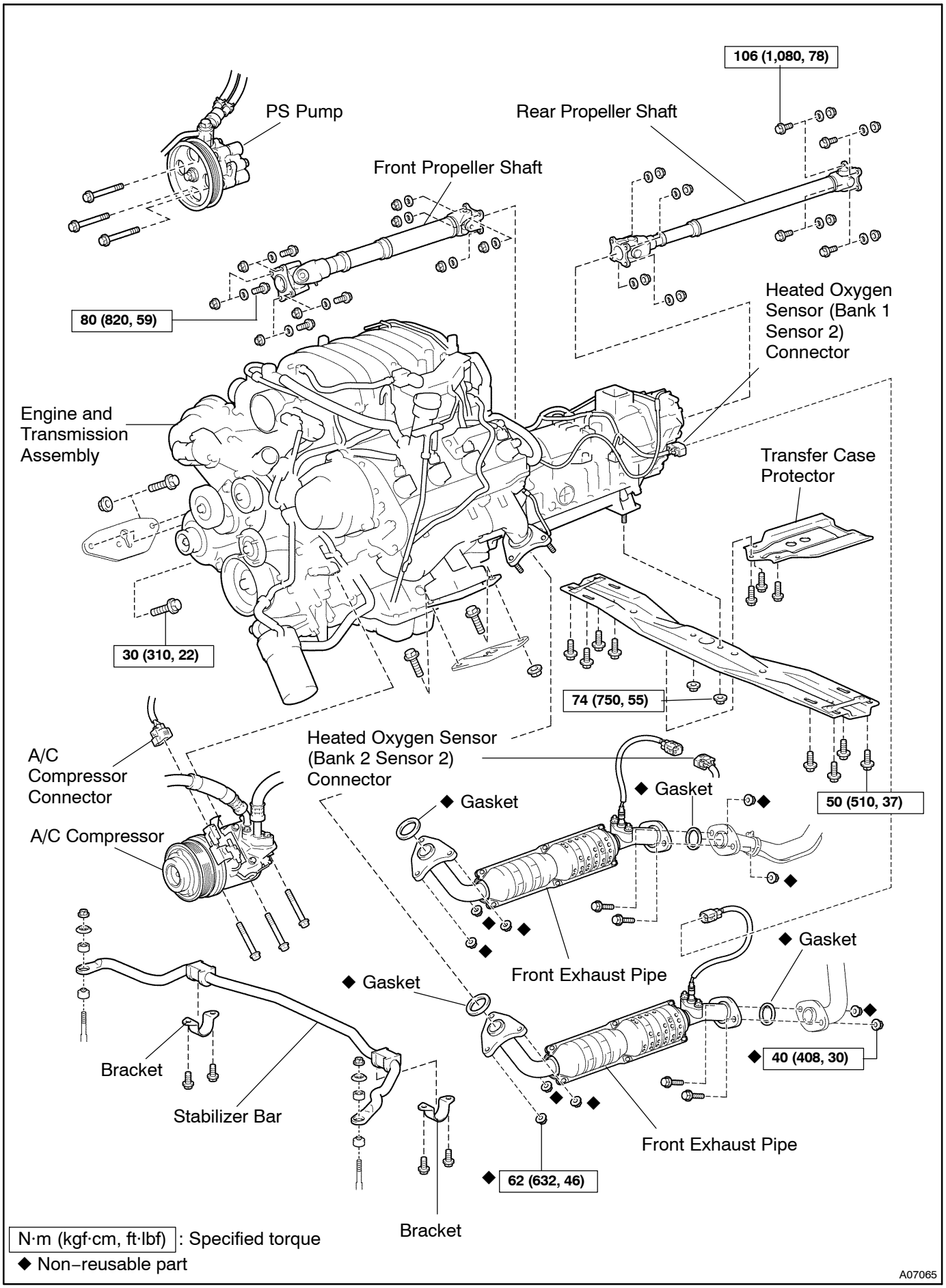
106 (1,080, 78)
PS Pump
Rear Propeller Shaft
Front Propeller Shaft
80 (820, 59)
Heated Oxygen Sensor (Bank 1 Sensor 2) Connector
Engine and Transmission Assembly
Transfer Case Protector
30 (310, 22)
74 (750, 55)
50 (510, 37)
A/C Compressor Connector
Heated Oxygen Sensor (Bank 2 Sensor 2) Connector
◆ Gasket
◆ Gasket
A/C Compressor
◆ Gasket
Front Exhaust Pipe
◆ Gasket
◆ 40 (408, 30)
Bracket
Stabilizer Bar
Front Exhaust Pipe
◆ 62 (632, 46)
Bracket
N·m (kgf·cm, ft·lbf) : Specified torque
◆ Non–reusable part
A07065

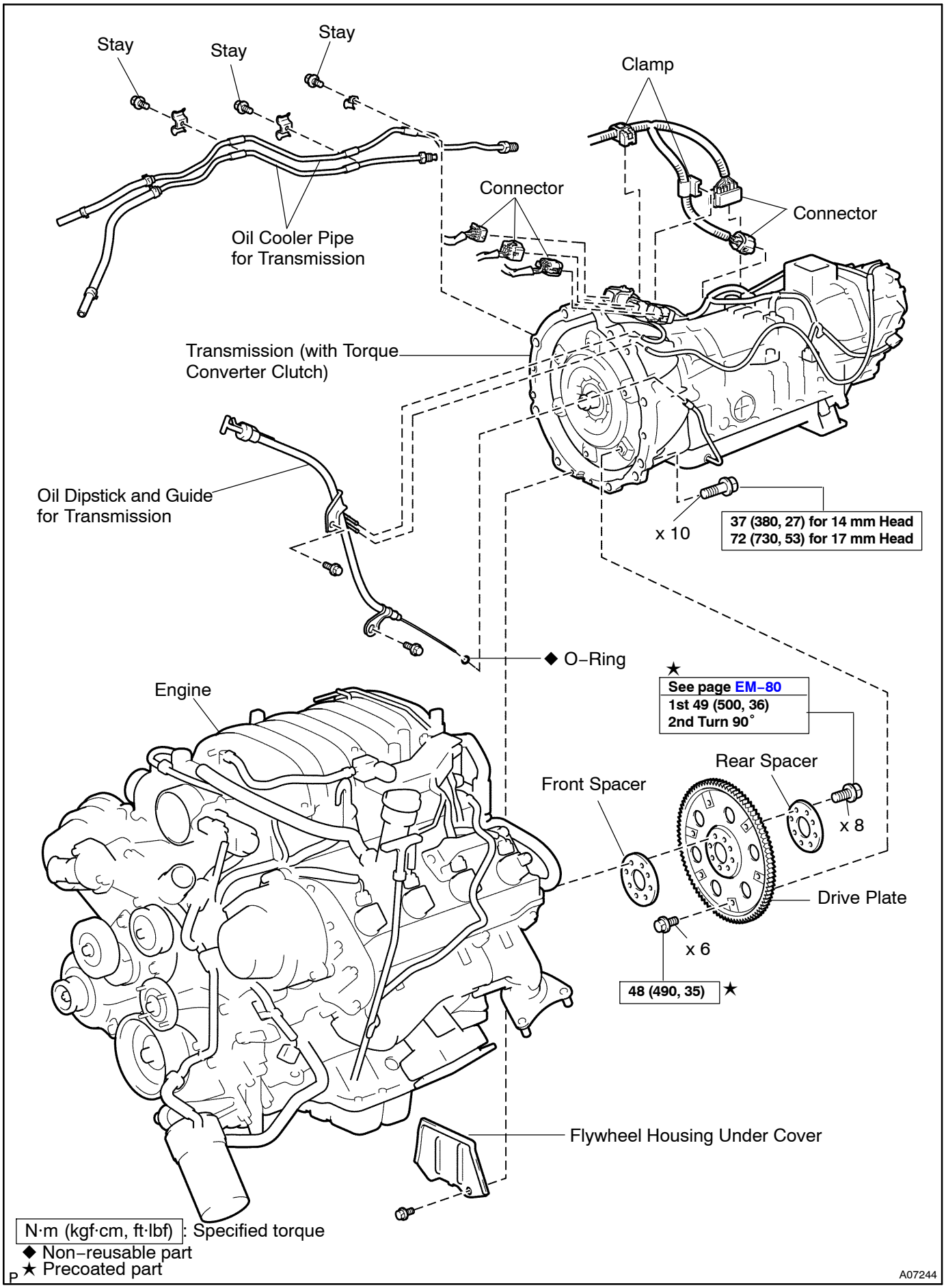
Stay
Stay
Stay
Clamp
Connector
Connector
Oil Cooler Pipe
for Transmission
Transmission (with Torque
Converter Clutch)
Oil Dipstick and Guide
for Transmission
x 10
37 (380, 27) for 14 mm Head
72 (730, 53) for 17 mm Head
◆ O–Ring
★
See page EM–80
1st 49 (500, 36)
2nd Turn 90°
Engine
Rear Spacer
Front Spacer
x 8
Drive Plate
x 6
48 (490, 35) ★
Flywheel Housing Under Cover
N·m (kgf·cm, ft·lbf) : Specified torque
◆ Non–reusable part
★ Precoated part
A07244