10 LAND CRUISER (LHD)

(Cont. next page)

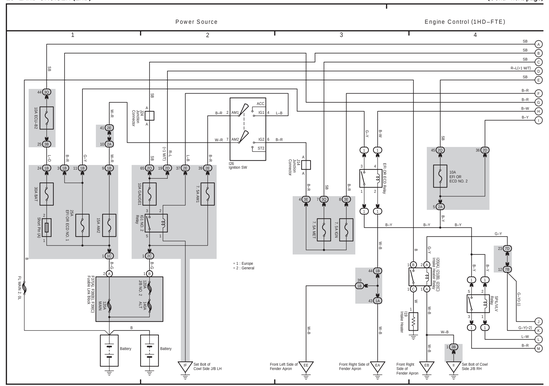

10 LAND CRUISER (LHD) (Cont' d)

(Cont. next page)

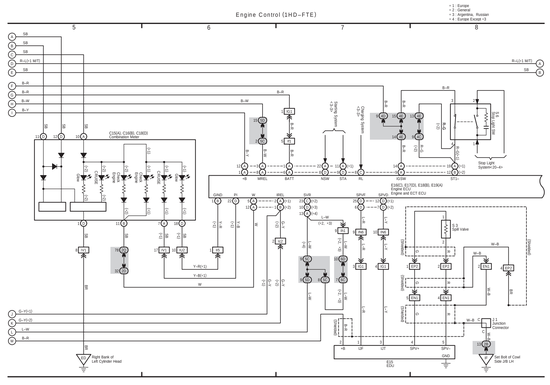

10 LAND CRUISER (LHD) (Cont' d)

(Cont. next page)

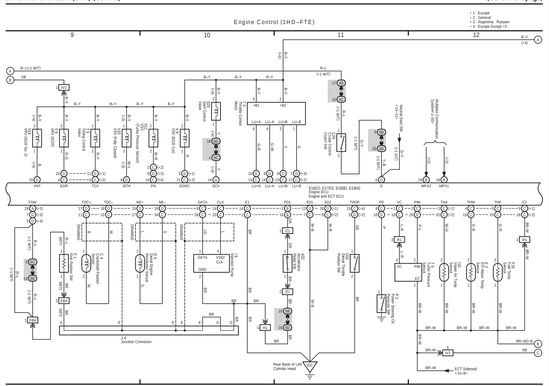

10 LAND CRUISER (LHD) (Cont' d)

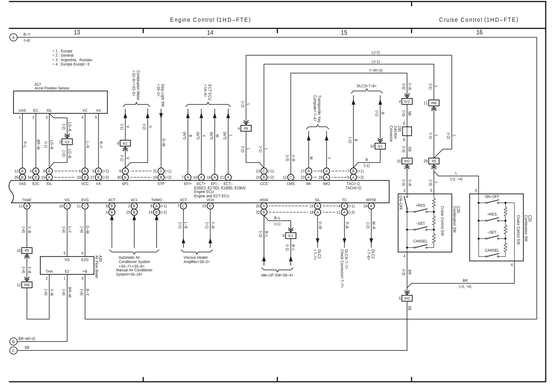
Engine Control (1HD-FTE)
Cruise Control (1HD-FTE)
13
14
15
16
*1 : Europe
*2 : General
*3 : Argentina, Russian
*4 : Europe Except *3
ACT
Actual Position Sensor
Combination Meter
Stop Light Switch
Air Conditioning Amplifier
Cruise Control Switch
Automatic Air Conditioning Amplifier
Vacuum Pump
Vacuum Pump Motor
Vacuum Pump Motor Relay
Vacuum Pump Motor Relay
Vacuum Pump Motor Relay