52 LAND CRUISER (RHD) (Cont. next page)

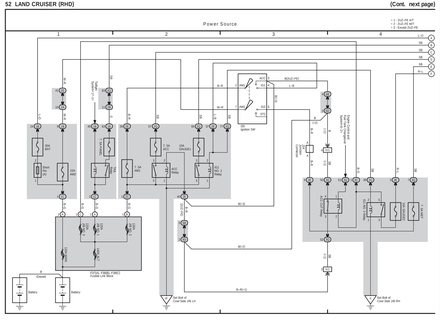

52 LAND CRUISER (RHD) (Cont. next page)

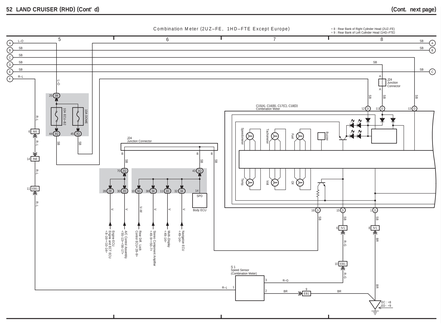

52 LAND CRUISER (RHD) (Cont. next page)

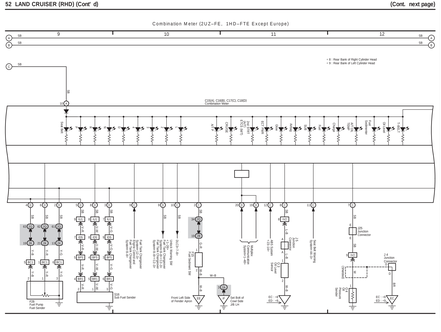
Combination Meter (2UZ–FE, 1HD–FTE Except Europe)
1 : Rear Back of Right Cylinder Head
2 : Rear Back of Left Cylinder Head
CIGAR CIGRE (CIRC) CIGRE Combination Meter
Fuel Pump Resistor
Fuel Pump Assembly
Fuel Sender
Front Left Side of Fender Apron
Set Bolt of Cowl Side Jib Lh
Set Bolt of Cowl Side Jib Rh
Engine Control Module
Engine Control Module
Engine Control Module