AIR CONDITIONER CONTROL ASSEMBLY (Manual A/C)

AC3QD–01

COMPONENTS

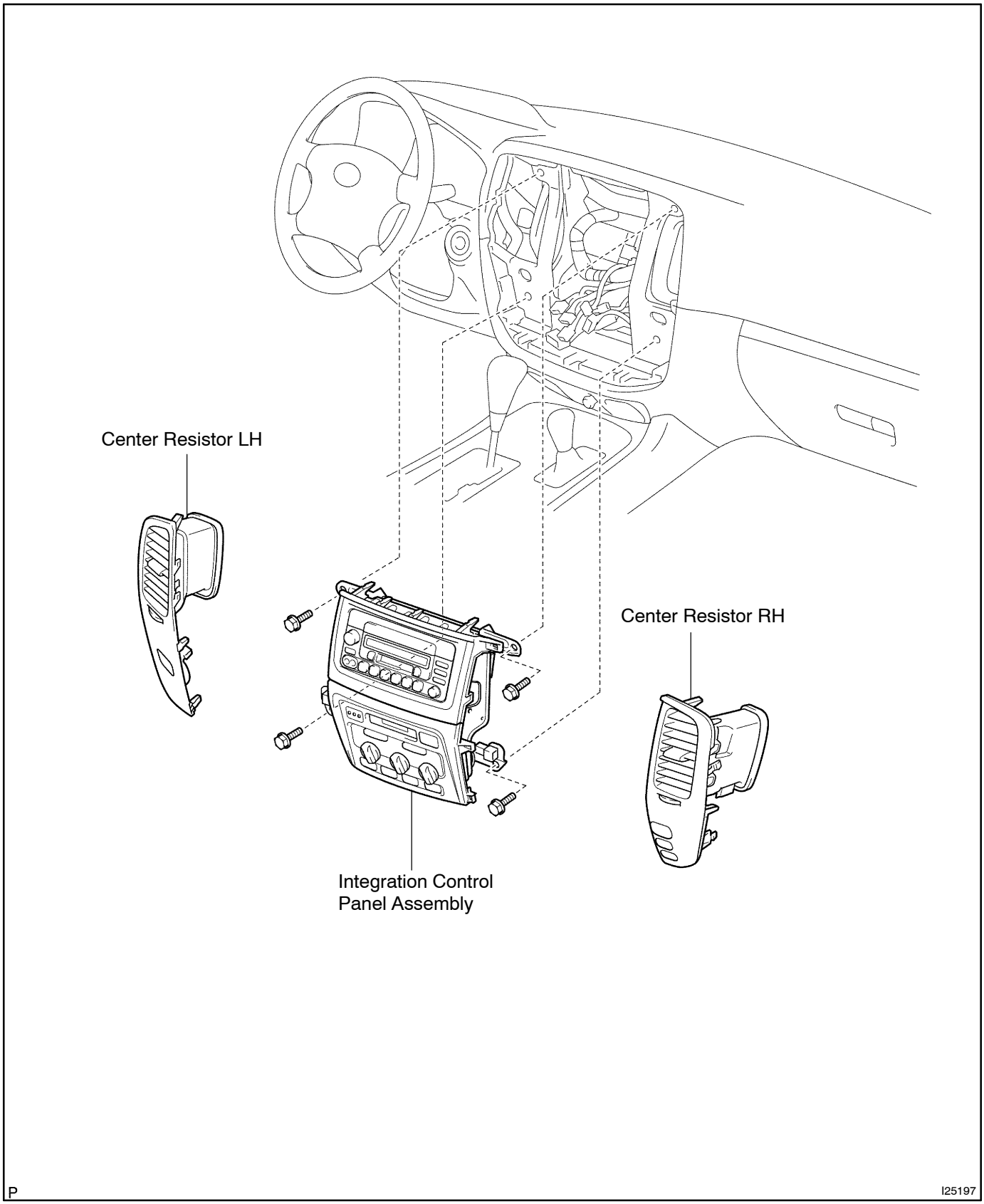

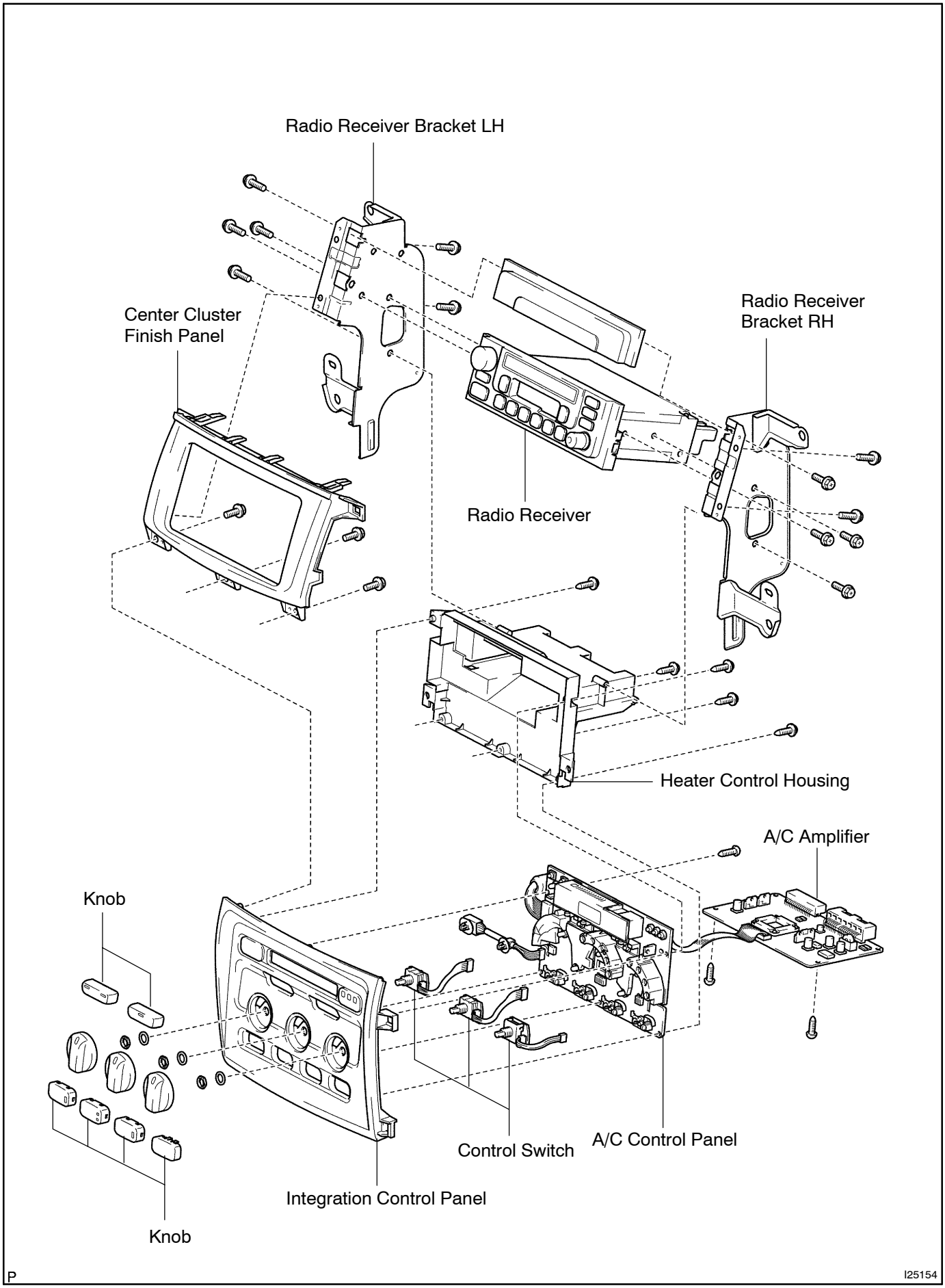
Radio Receiver Bracket LH
Center Cluster Finish Panel
Radio Receiver Bracket RH
Radio Receiver
Heater Control Housing
A/C Amplifier
Knob
Control Switch
A/C Control Panel
Integration Control Panel
Knob
P
I25154