AIR COOLED OIL COOLER (2UZ–FE)

AT09M–02
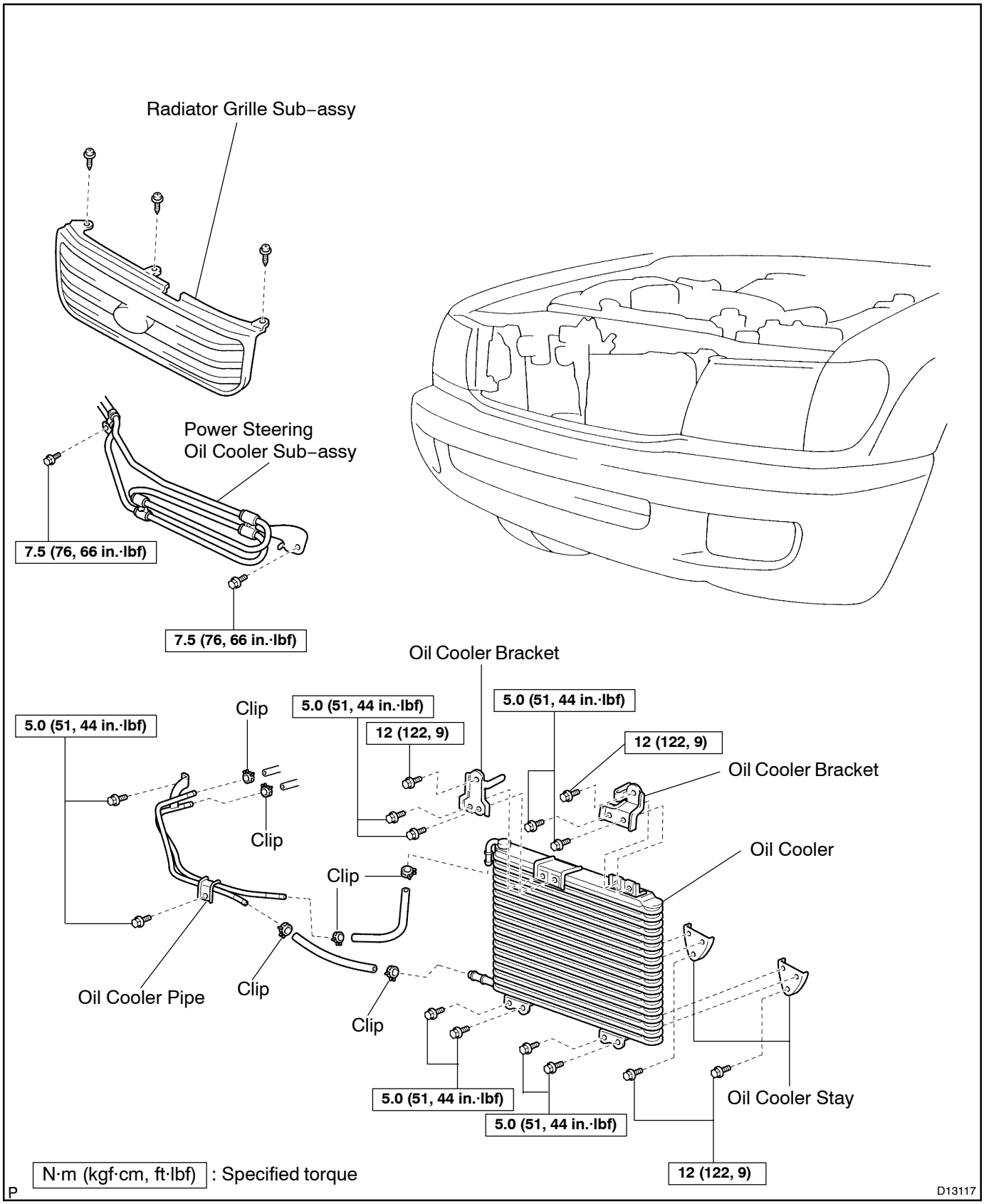
COMPONENTS