DIAXZ–01

PARTS LOCATION

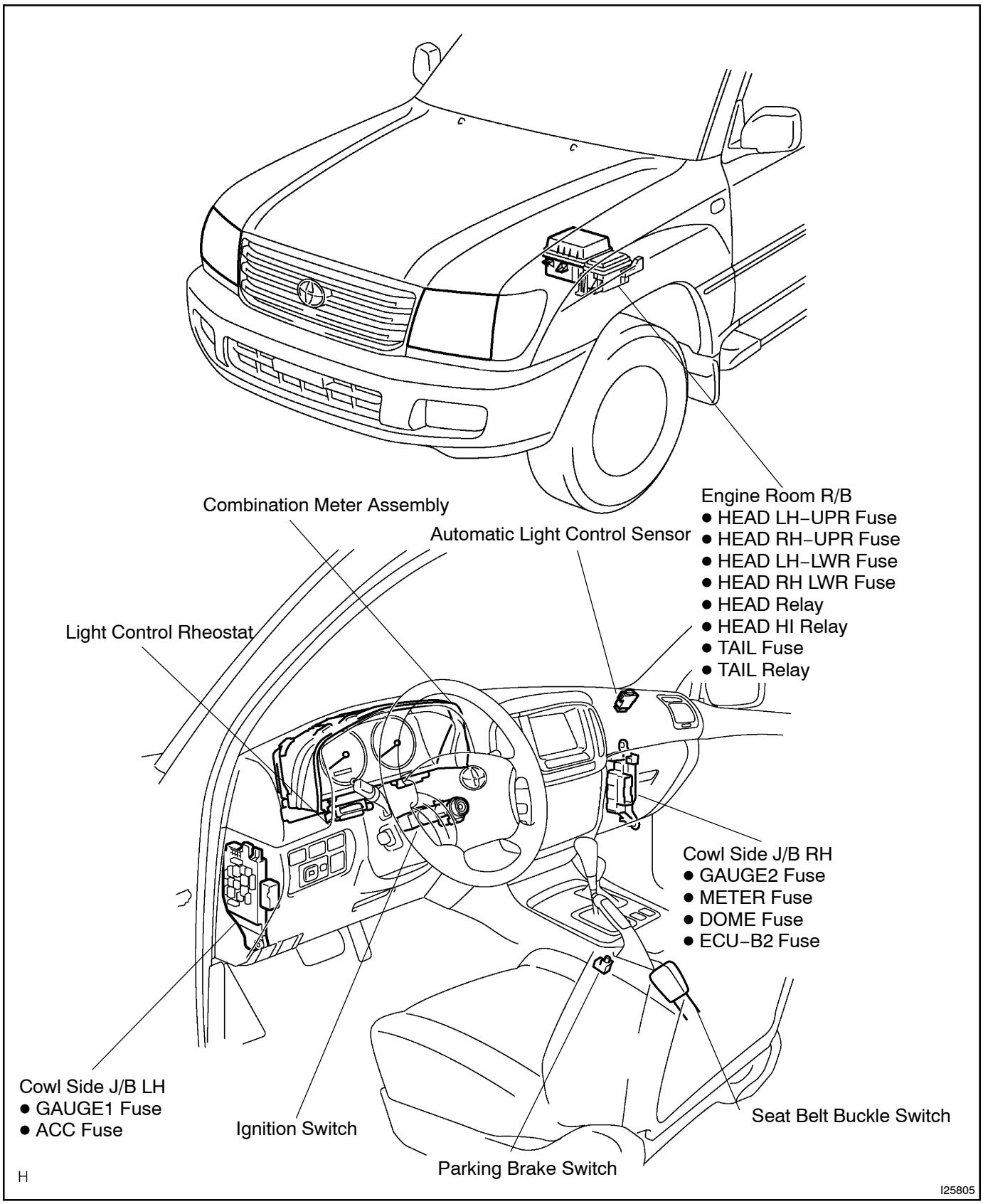

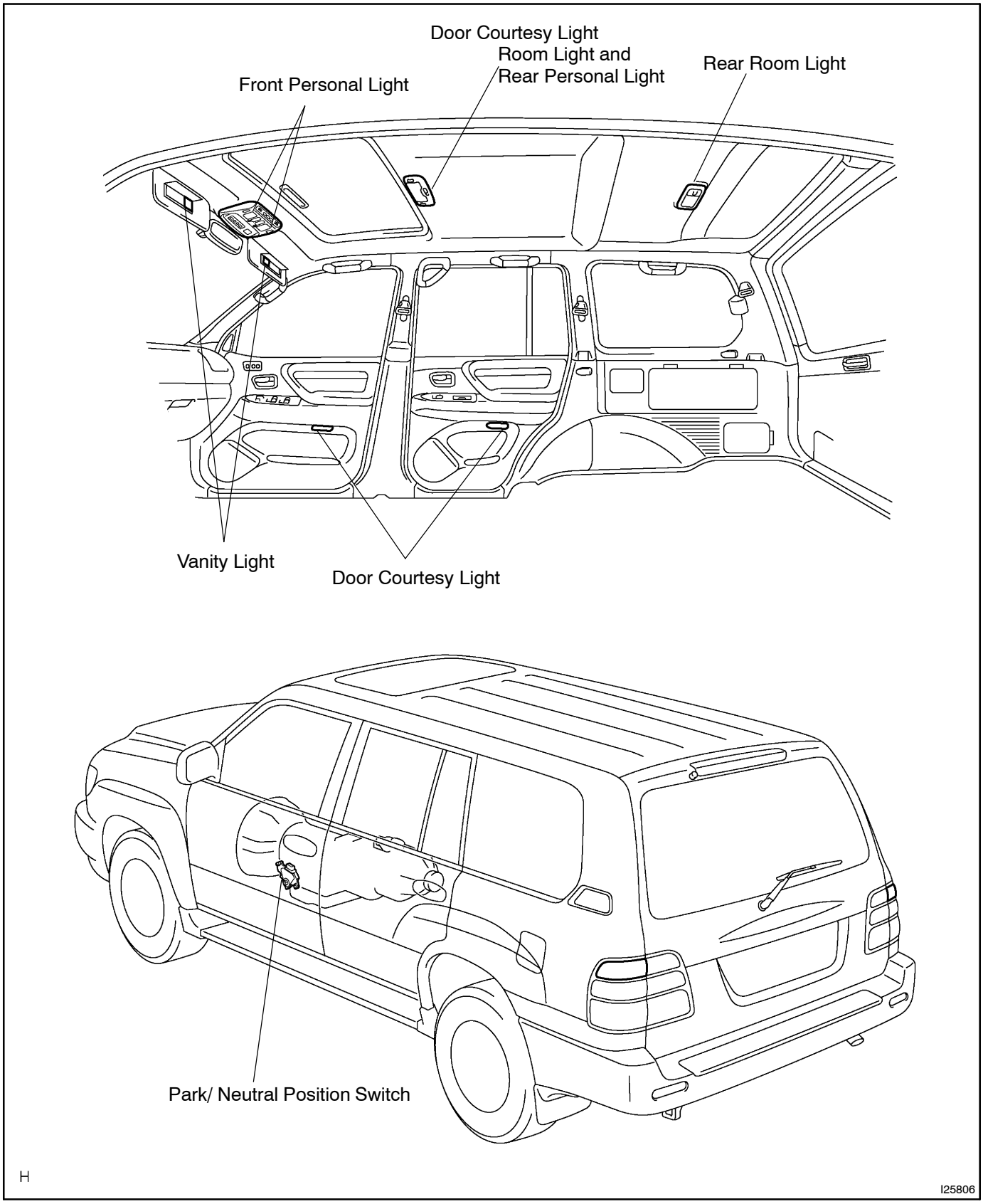
Door Courtesy Light
Room Light and
Rear Personal Light
Rear Room Light
Front Personal Light
Vanity Light
Door Courtesy Light
Park/ Neutral Position Switch
H
I25806