DI3BR–04
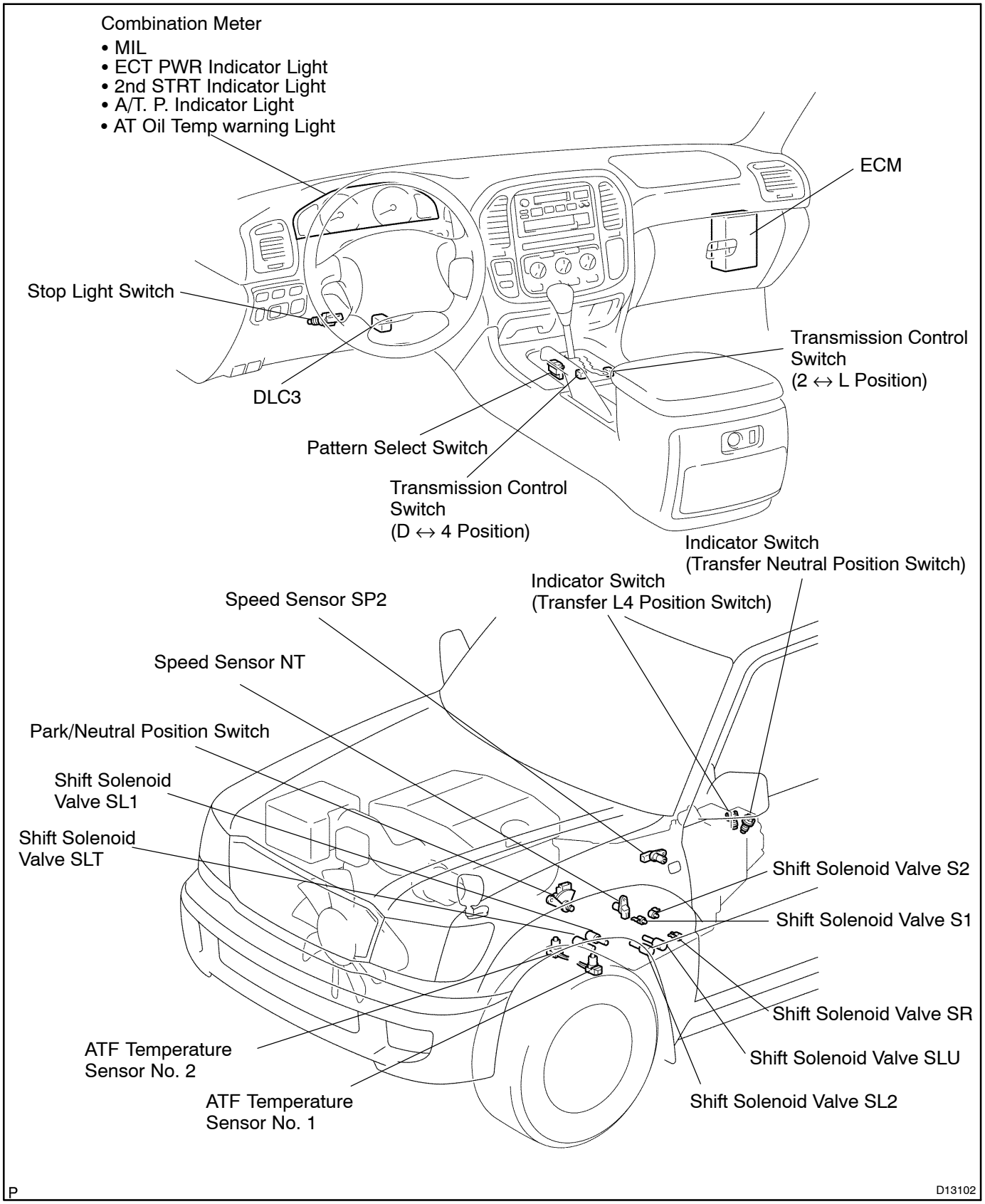
PARTS LOCATION