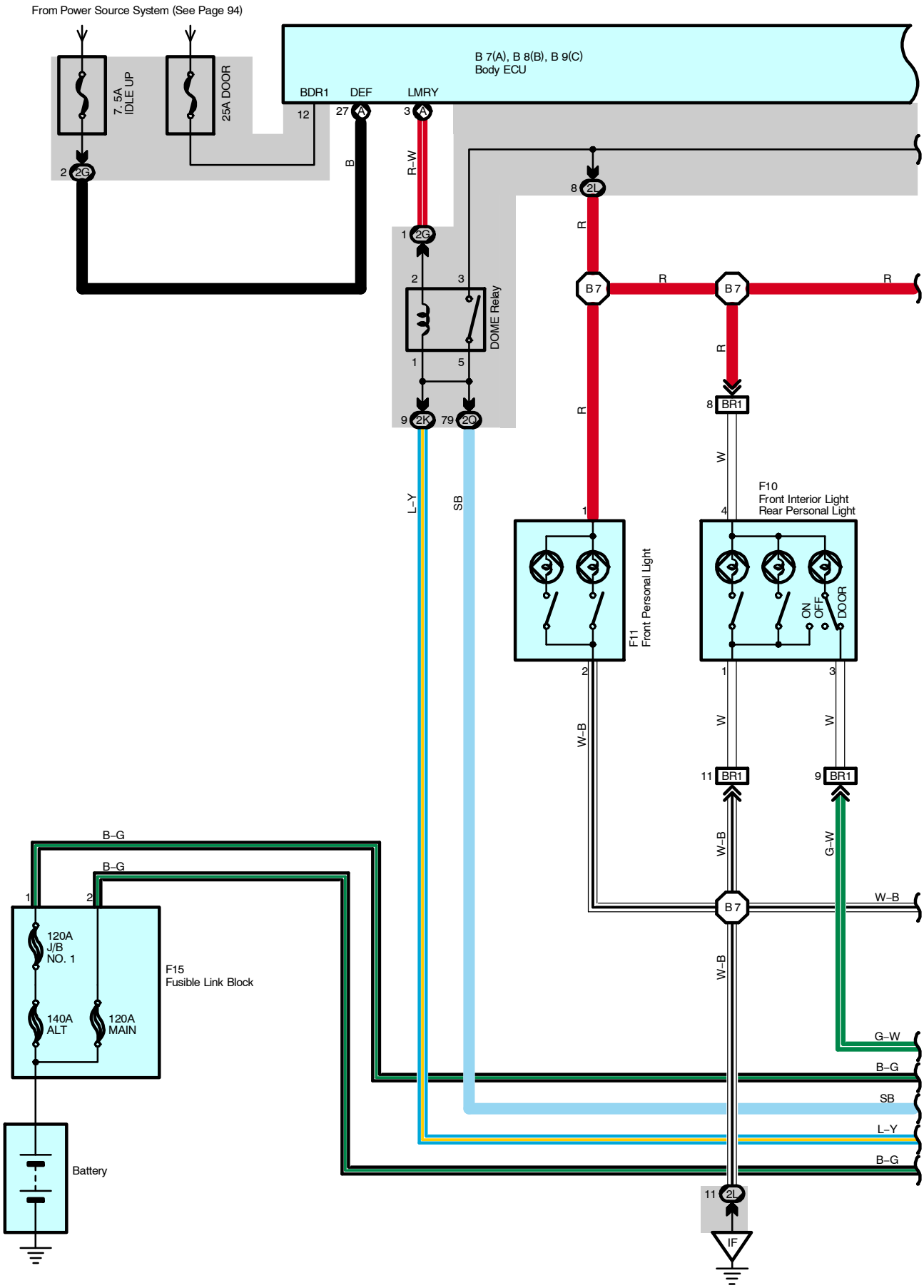
From Power Source System (See Page 94)
7.5A
IDLE UP
25A DOOR
B 7(A), B 8(B), B 9(C)
Body ECU
BDR1
DEF
LMRY
12
27
3
B
R-W
2
2G
8
2L
R
1
2G
2
3
DOME Relay
1
5
9
2K
79
2O
B7
R
B7
R
R
R
8
BR1
W
F10
Front Interior Light
Rear Personal Light
L-Y
SB
1
4
F11
Front Personal Light
ON
OFF
DOOR
2
1
3
W-B
W
W
11
BR1
9
BR1
W-B
G-W
B-G
B-G
1
2
120A
J/B
NO. 1
F15
Fusible Link Block
140A
ALT
120A
MAIN
B7
W-B
W-B
G-W
B-G
SB
L-Y
B-G
Battery
11
2L
IF

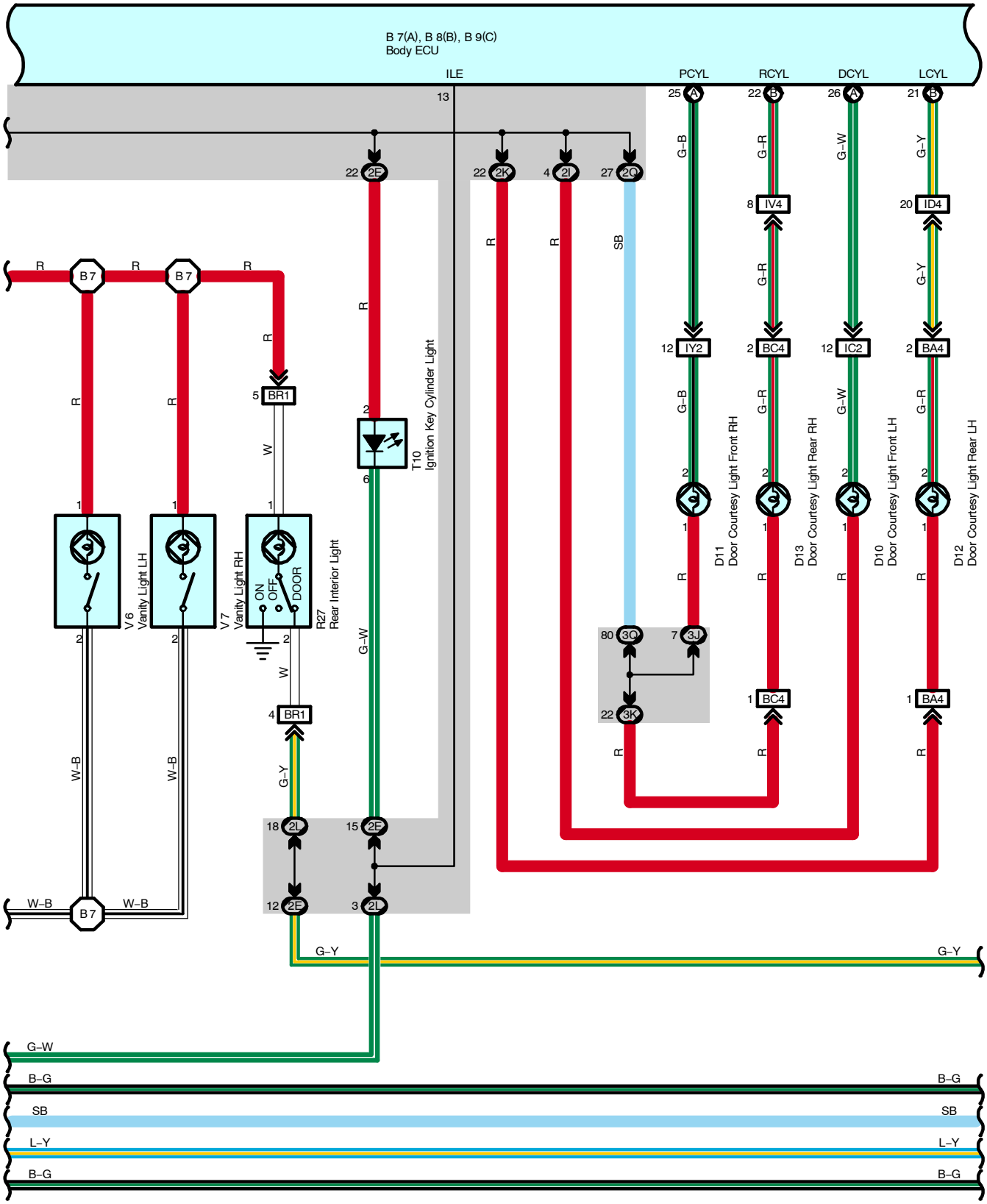
B 7(A), B 8(B), B 9(C)
Body ECU
ILE
PCYL
RCYL
DCYL
LCYL
V6
Vanity Light LH
V7
Vanity Light RH
R27
Rear Interior Light
ON
OFF
DOOR
T10
Ignition Key Cylinder Light
D11
Door Courtesy Light Front RH
D13
Door Courtesy Light Rear RH
D10
Door Courtesy Light Front LH
D12
Door Courtesy Light Rear LH
G–Y
G–W
B–G
SB
L–Y
W–B

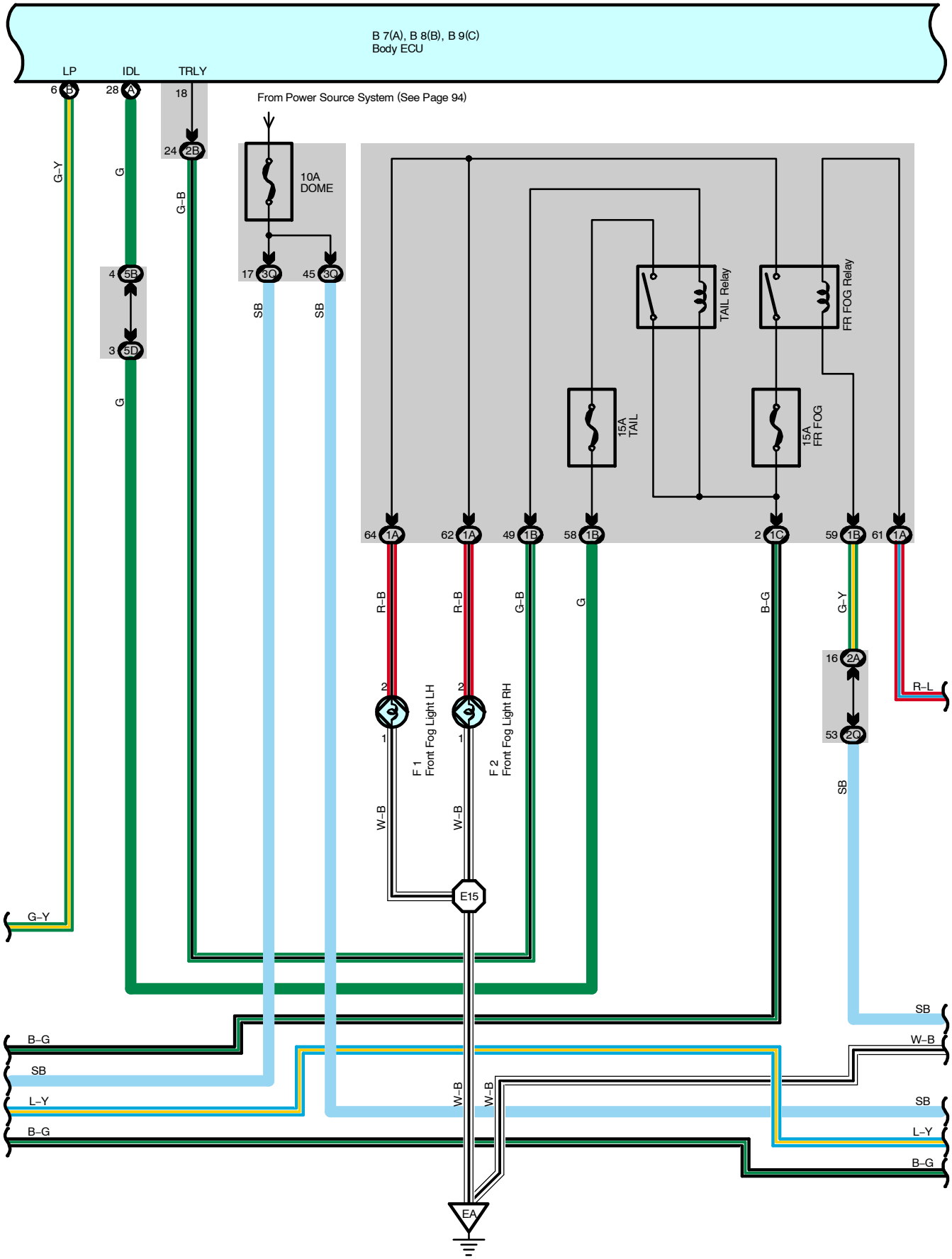
B 7(A), B 8(B), B 9(C)
Body ECU
LP
IDL
TRLY
From Power Source System (See Page 94)
10A
DOME
TAIL Relay
FR FOG Relay
15A
TAIL
15A
FR FOG
F 1
Front Fog Light LH
F 2
Front Fog Light RH
E15
EA
G-Y
G
G-B
SB
R-B
W-B
B-G
L-Y
R-L

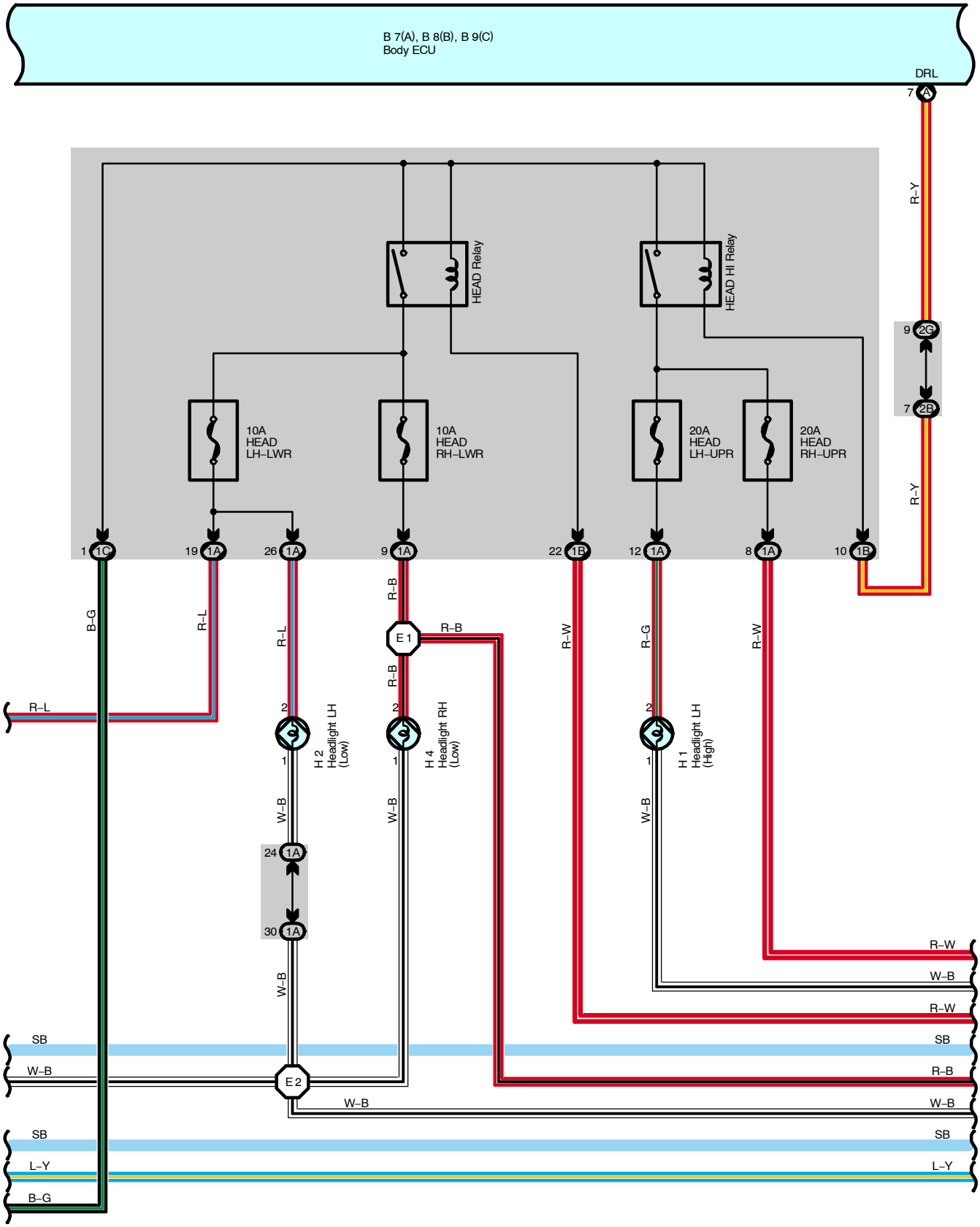
B 7(A), B 8(B), B 9(C)
Body ECU
DRL
7
R–Y
HEAD Relay
HEAD HI Relay
9 2G
7 2B
10A
HEAD
LH–LWR
10A
HEAD
RH–LWR
20A
HEAD
LH–UPR
20A
HEAD
RH–UPR
1 1C
19 1A
26 1A
9 1A
22 1B
12 1A
8 1A
10 1B
B–G
R–L
R–B
E 1
R–W
R–G
2
1
H 2
Headlight LH
(Low)
H 4
Headlight RH
(Low)
H 1
Headlight LH
(High)
W–B
24 1A
30 1A
SB
E 2
L–Y

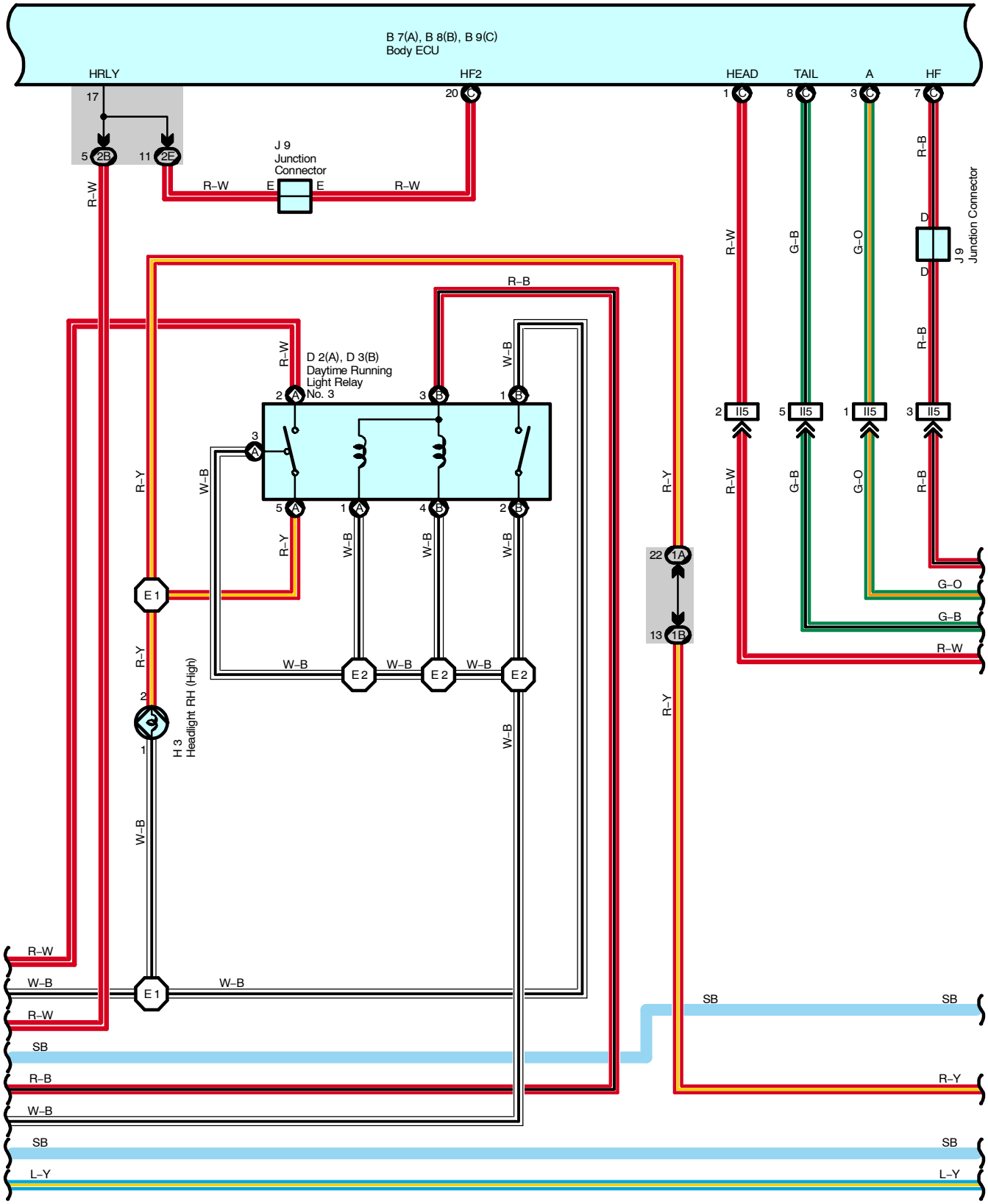
B 7(A), B 8(B), B 9(C)
Body ECU
HRLY
HF2
HEAD
TAIL
A
HF
17
20
1
8
3
7
5
2B
11
2E
J 9
Junction
Connector
R–W
E
E
R–W
R–W
R–B
D
D
J 9
Junction Connector
R–W
G–B
G–O
R–B
D 2(A), D 3(B)
Daytime Running
Light Relay
No. 3
R–B
R–W
W–B
2
A
3
B
1
B
3
A
5
A
1
A
4
B
2
B
R–Y
W–B
R–Y
W–B
W–B
W–B
2
II5
5
II5
1
II5
3
II5
R–W
G–B
G–O
R–B
22
1A
13
1B
R–Y
G–O
G–B
R–W
E 1
R–Y
W–B
E 2
W–B
E 2
W–B
E 2
2
1
H 3
Headlight RH (High)
W–B
W–B
R–Y
R–W
W–B
E 1
W–B
R–W
SB
SB
SB
R–B
R–Y
W–B
SB
SB
L–Y
L–Y

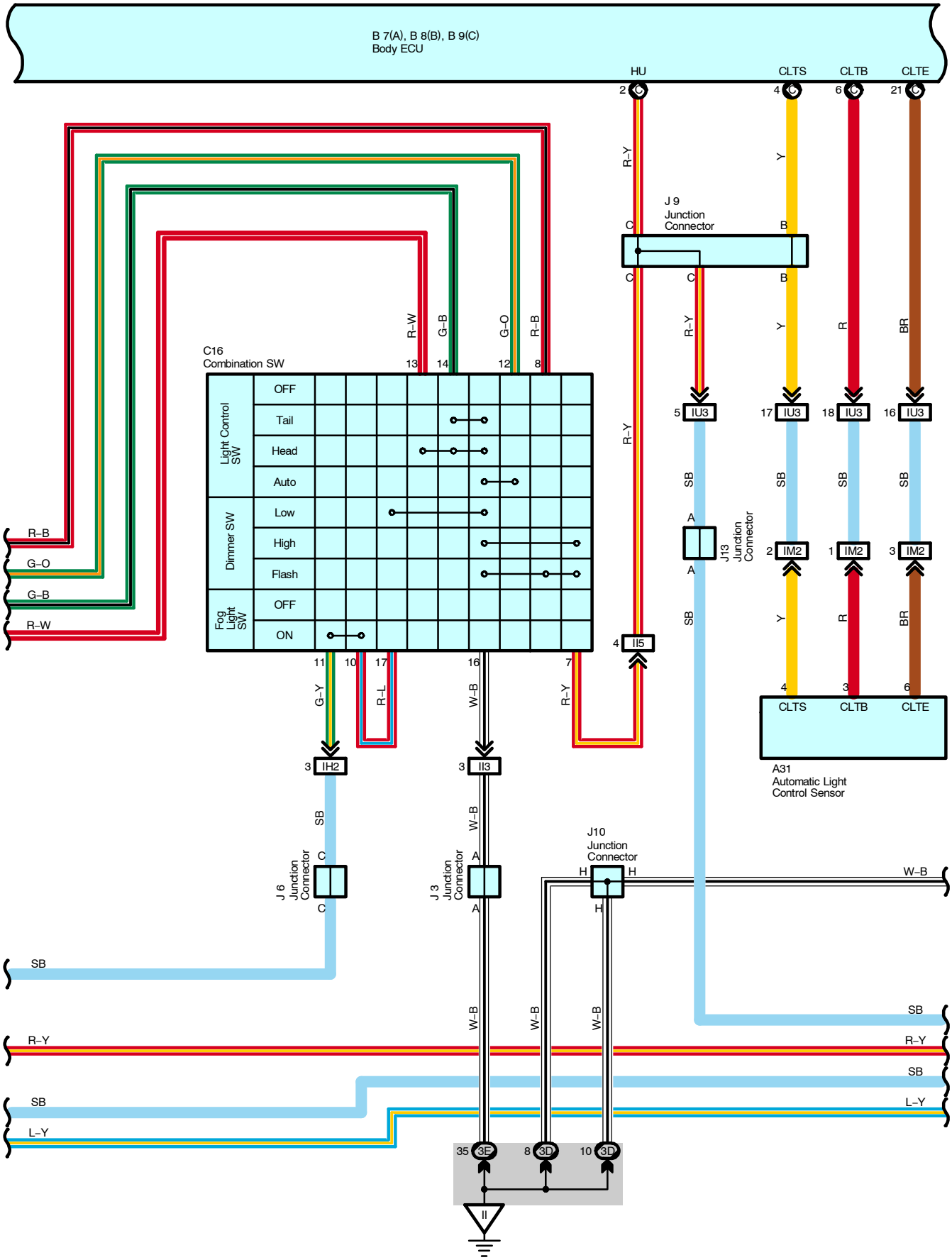
B 7(A), B 8(B), B 9(C)
Body ECU
HU
CLTS
CLTB
CLTE
J 9
Junction
Connector
C16
Combination SW
Light Control SW
OFF
Tail
Head
Auto
Dimmer SW
Low
High
Flash
Fog Light SW
OFF
ON
R–B
G–O
G–B
R–W
R–Y
Y
R
BR
SB
W–B
G–Y
R–L
L–Y
IU3
IM2
II5
IH2
II3
J13
Junction
Connector
A31
Automatic Light
Control Sensor
J 6
Junction
Connector
J 3
Junction
Connector
J10
Junction
Connector
3E
3D
II

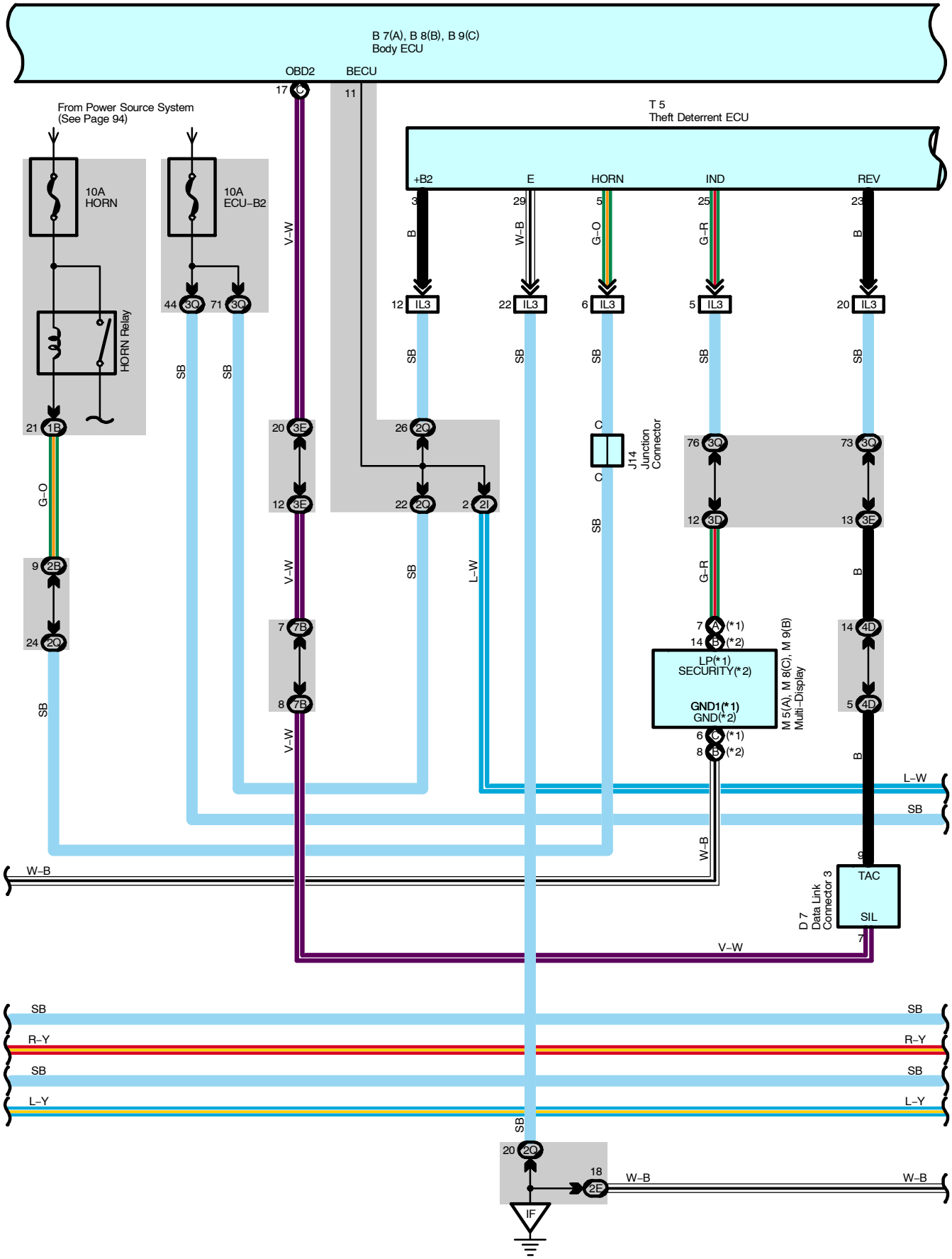
B 7(A), B 8(B), B 9(C)
Body ECU
OBD2
BECU
From Power Source System
(See Page 94)
10A
HORN
10A
ECU-B2
HORN Relay
T 5
Theft Deterrent ECU
+B2
E
HORN
IND
REV
IL3
J14
Junction
Connector
LP(*1)
SECURITY(*2)
GND1(*1)
GND(*2)
M 5(A), M 8(C), M 9(B)
Multi-Display
D 7
Data Link
Connector 3
TAC
SIL
IF
V-W
W-B
L-W
SB
R-Y
L-Y
G-O
G-R
B

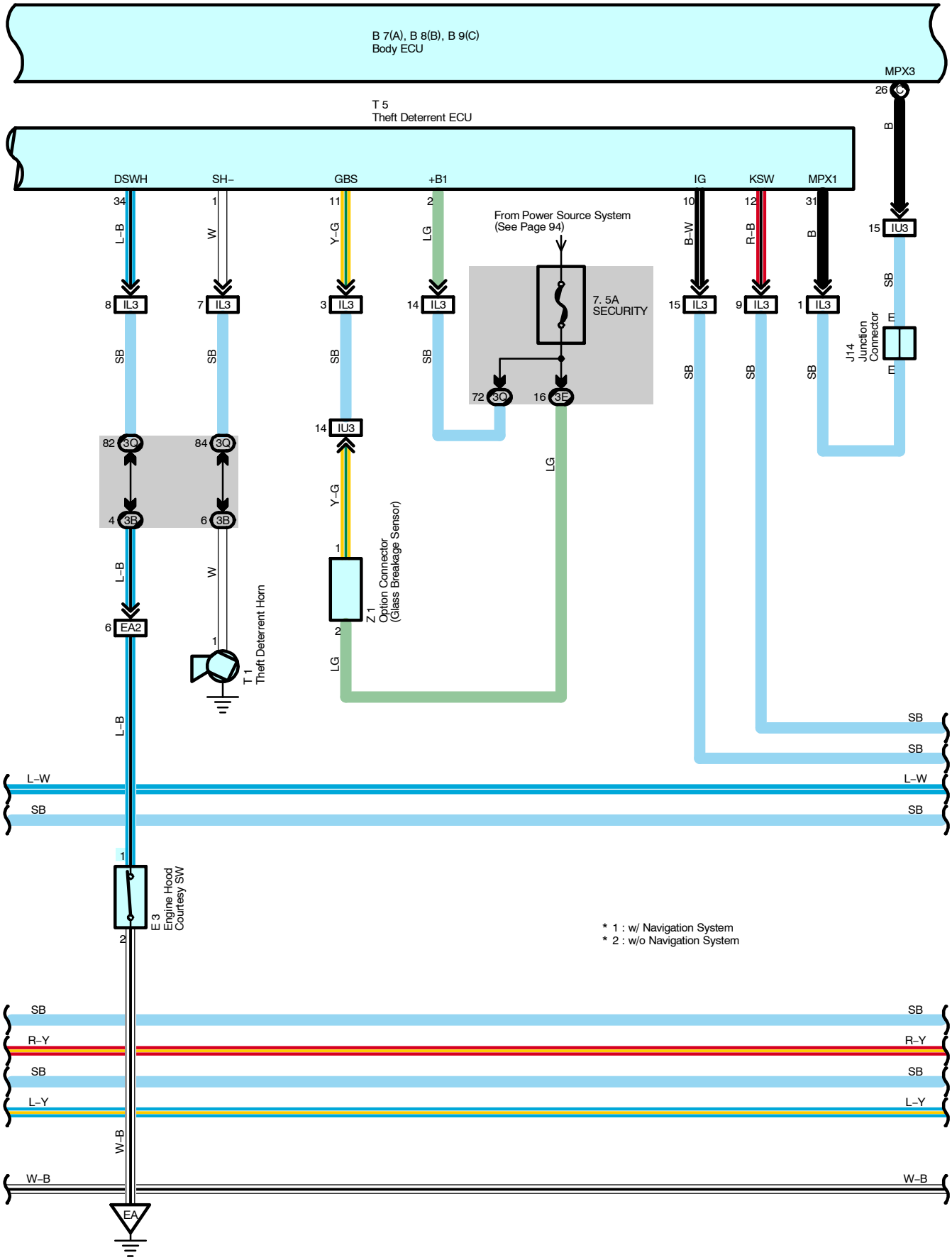
B 7(A), B 8(B), B 9(C)
Body ECU
MPX3
26
B
T 5
Theft Deterrent ECU
DSWH
SH–
GBS
+B1
IG
KSW
MPX1
34
L–B
8 IL3
SB
82 3Q
4 3B
L–B
6 EA2
L–B
1
E 3
Engine Hood
Courtesy SW
2
W–B
EA
1
W
7 IL3
SB
84 3Q
6 3B
W
1
T 1
Theft Deterrent Horn
11
Y–G
3 IL3
SB
14 IU3
Y–G
1
Z 1
Option Connector
(Glass Breakage Sensor)
2
LG
2
LG
14 IL3
SB
From Power Source System
(See Page 94)
7. 5A
SECURITY
72 3Q
16 3E
LG
10
B–W
15 IL3
SB
12
R–B
9 IL3
SB
31
B
1 IL3
SB
15 IU3
SB
J14
Junction
Connector
E
E
SB
SB
L–W
L–W
SB
SB
SB
SB
R–Y
R–Y
SB
SB
L–Y
L–Y
W–B
W–B
* 1 : w/ Navigation System
* 2 : w/o Navigation System

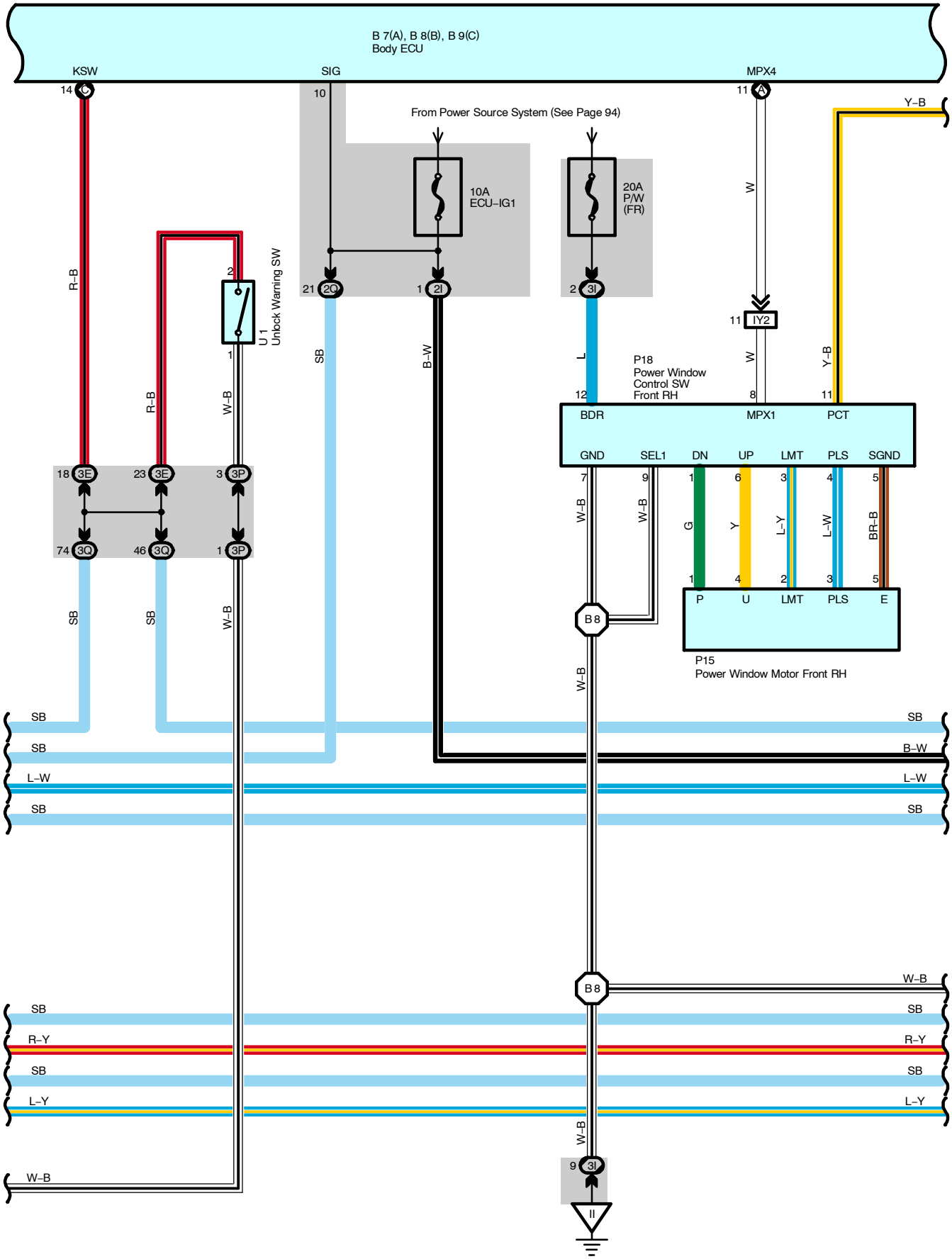
B 7(A), B 8(B), B 9(C)
Body ECU
KSW
SIG
MPX4
From Power Source System (See Page 94)
10A
ECU–IG1
20A
P/W
(FR)
U 1
Unlock Warning SW
P18
Power Window
Control SW
Front RH
BDR
MPX1
PCT
GND
SEL1
DN
UP
LMT
PLS
SGND
P
U
LMT
PLS
E
P15
Power Window Motor Front RH
B 8
1Y2
R–B
W–B
SB
B–W
L
W
Y–B
G
Y
L–Y
L–W
BR–B
R–Y

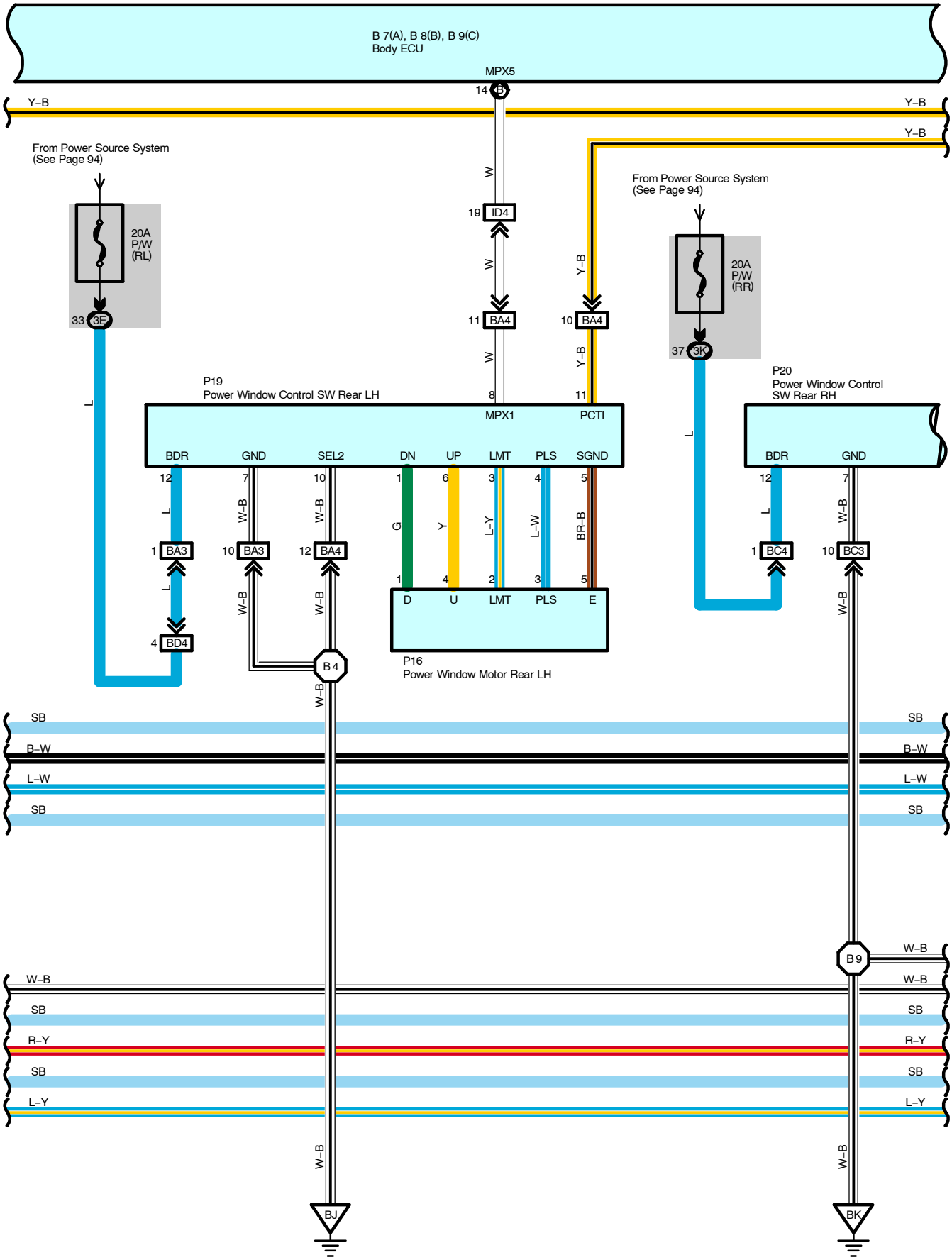
B 7(A), B 8(B), B 9(C)
Body ECU
MPX5
14 B
Y–B
Y–B
Y–B
From Power Source System
(See Page 94)
20A
P/W
(RL)
33 3E
W
19 ID4
W
11 BA4
W
8
Y–B
10 BA4
Y–B
11
From Power Source System
(See Page 94)
20A
P/W
(RR)
37 3K
L
P19
Power Window Control SW Rear LH
MPX1
PCTI
BDR
GND
SEL2
DN
UP
LMT
PLS
SGND
12
7
10
1
6
3
4
5
L
W–B
W–B
G
Y
L–Y
L–W
BR–B
1 BA3
10 BA3
12 BA4
1
4
2
3
5
L
W–B
W–B
4 BD4
B 4
W–B
D
U
LMT
PLS
E
P16
Power Window Motor Rear LH
P20
Power Window Control
SW Rear RH
BDR
GND
12
7
L
W–B
1 BC4
10 BC3
W–B
SB
B–W
L–W
SB
SB
B–W
L–W
SB
B 9
W–B
W–B
W–B
SB
R–Y
SB
L–Y
W–B
SB
R–Y
SB
L–Y
W–B
W–B
BJ
BK

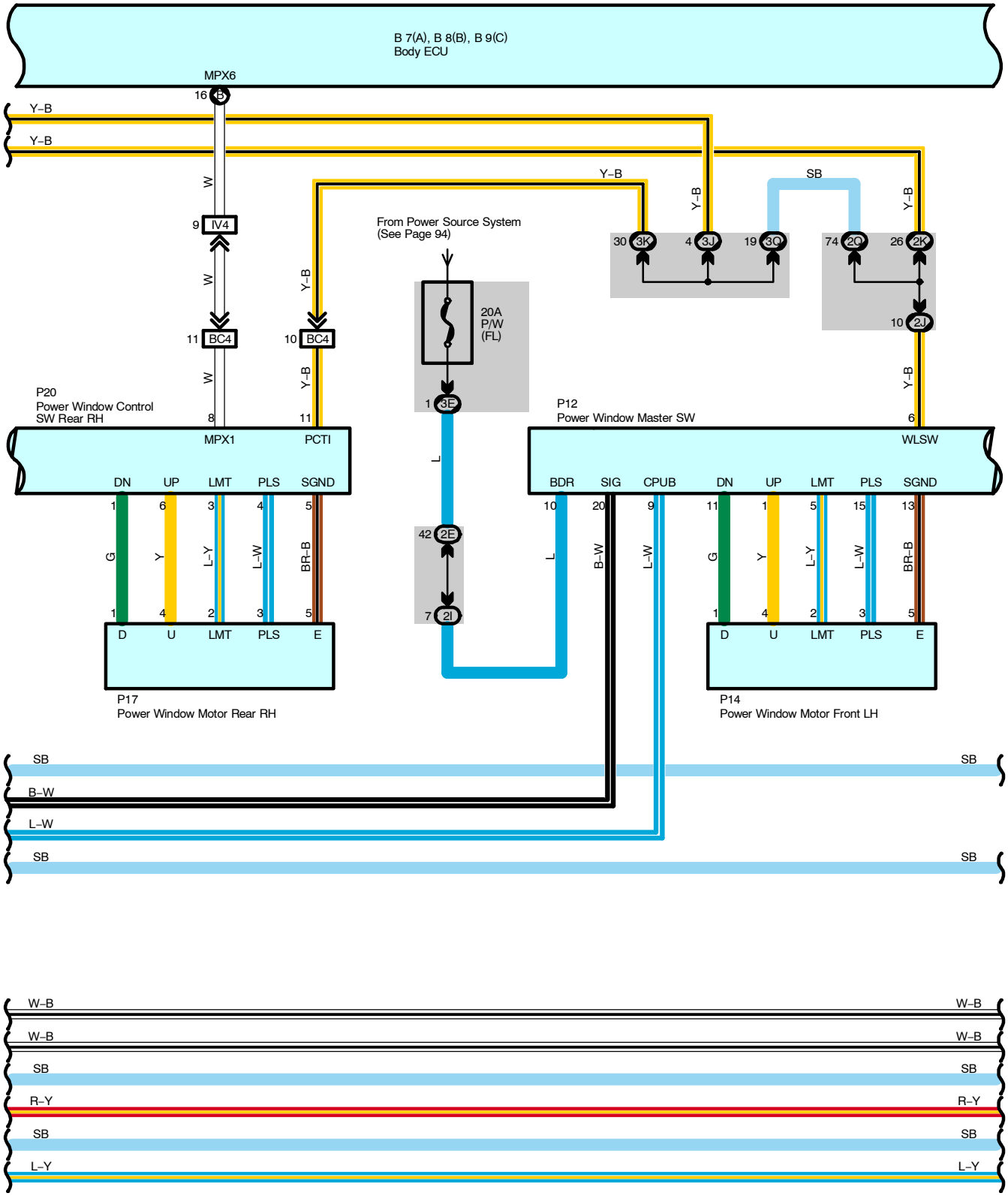
B 7(A), B 8(B), B 9(C)
Body ECU
MPX6
16 5
Y–B
Y–B
W
9 IV4
W
11 BC4
W
8
10 BC4
Y–B
11
Y–B
Y–B
SB
Y–B
From Power Source System
(See Page 94)
30 3K
4 3J
19 3O
74 2O
26 2K
10 2J
Y–B
20A
P/W
(FL)
1 3E
L
42 2E
7 2I
P20
Power Window Control
SW Rear RH
MPX1
PCTI
DN
UP
LMT
PLS
SGND
1
6
3
4
5
G
Y
L–Y
L–W
BR–B
1
4
2
3
5
D
U
LMT
PLS
E
P17
Power Window Motor Rear RH
P12
Power Window Master SW
6
WLSW
BDR
SIG
CPUB
DN
UP
LMT
PLS
SGND
10
20
9
11
1
5
15
13
L
B–W
L–W
G
Y
L–Y
L–W
BR–B
1
4
2
3
5
D
U
LMT
PLS
E
P14
Power Window Motor Front LH
SB
SB
B–W
L–W
SB
SB
W–B
W–B
W–B
W–B
SB
SB
R–Y
R–Y
SB
SB
L–Y
L–Y

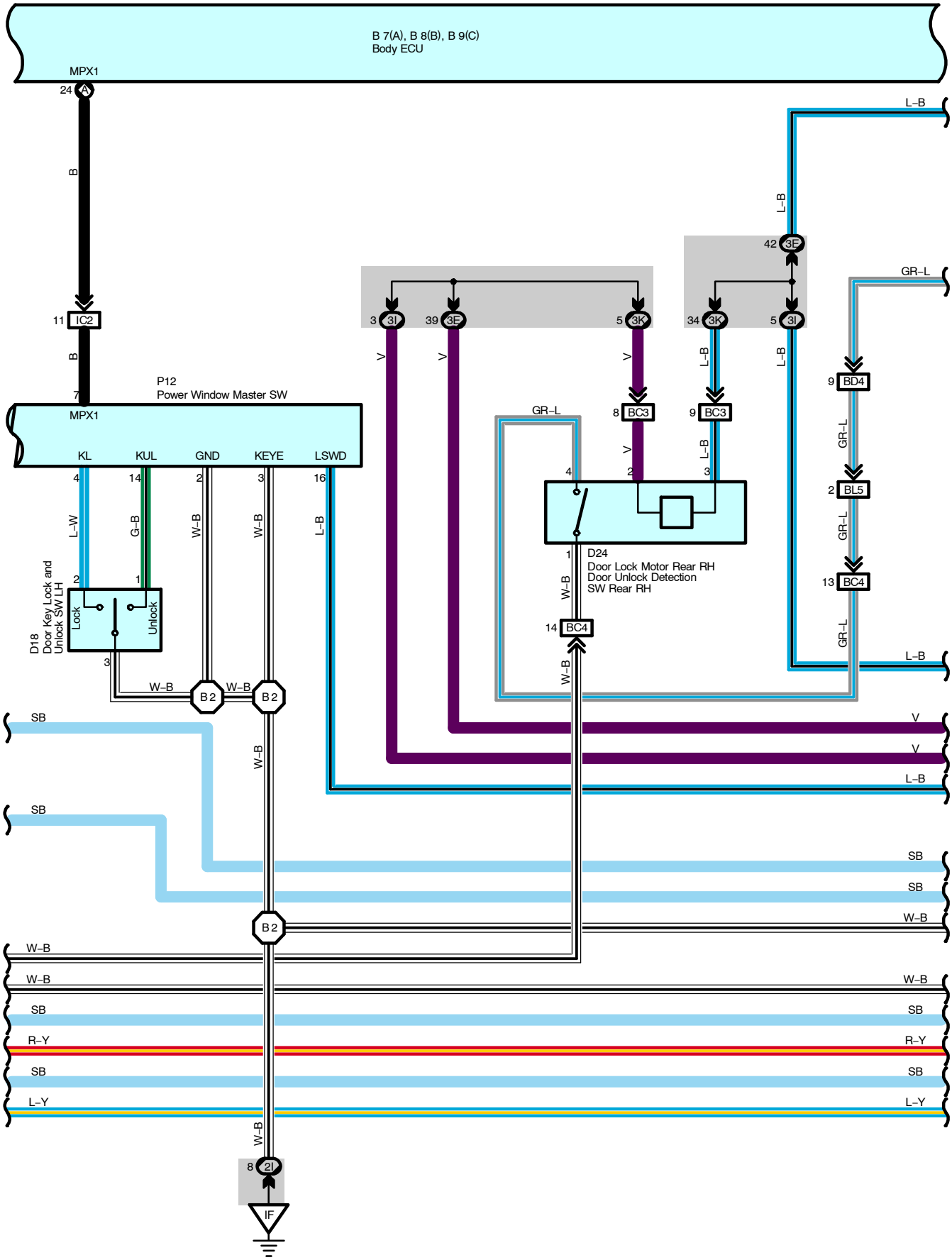
B 7(A), B 8(B), B 9(C)
Body ECU
MPX1
24
B
11
IC2
B
7
P12
Power Window Master SW
MPX1
KL
KUL
GND
KEYE
LSWD
4
14
2
3
16
L-W
G-B
W-B
W-B
L-B
D18
Door Key Lock and
Unlock SW LH
Lock
Unlock
2
1
3
W-B
B 2
W-B
B 2
SB
SB
W-B
B 2
W-B
W-B
SB
R-Y
SB
L-Y
W-B
8
2I
IF
3
3I
39
3E
5
3K
V
V
V
8
BC3
V
2
GR-L
4
1
D24
Door Lock Motor Rear RH
Door Unlock Detection
SW Rear RH
W-B
14
BC4
W-B
L-B
42
3E
34
3K
5
3I
L-B
L-B
9
BC3
L-B
3
L-B
GR-L
9
BD4
GR-L
2
BL5
GR-L
13
BC4
GR-L
L-B
V
V
L-B
SB
SB
W-B
W-B
SB
R-Y
SB
L-Y

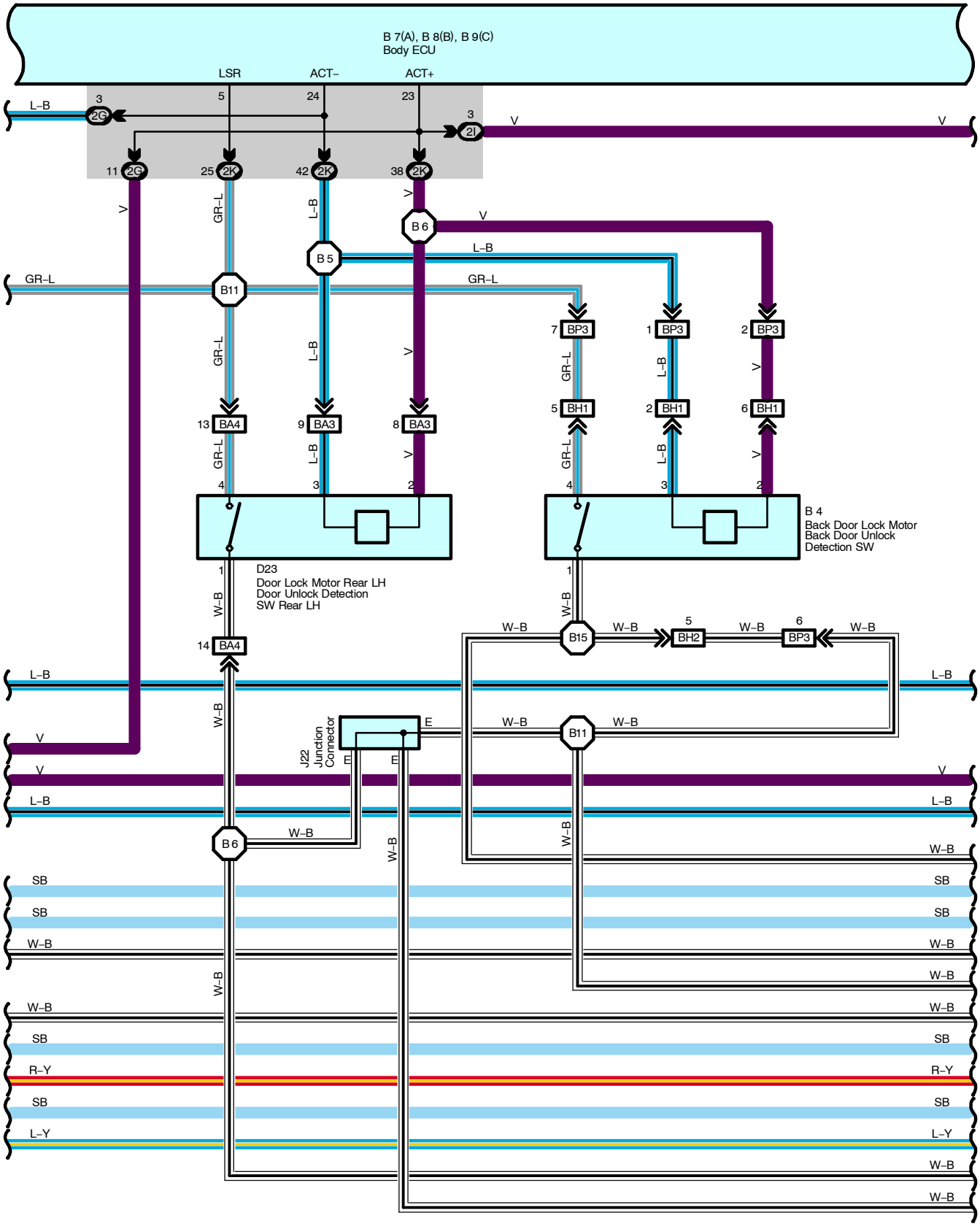
B 7(A), B 8(B), B 9(C)
Body ECU
LSR
ACT–
ACT+
B 4
Back Door Lock Motor
Back Door Unlock
Detection SW
D23
Door Lock Motor Rear LH
Door Unlock Detection
SW Rear LH
J22
Junction
Connector

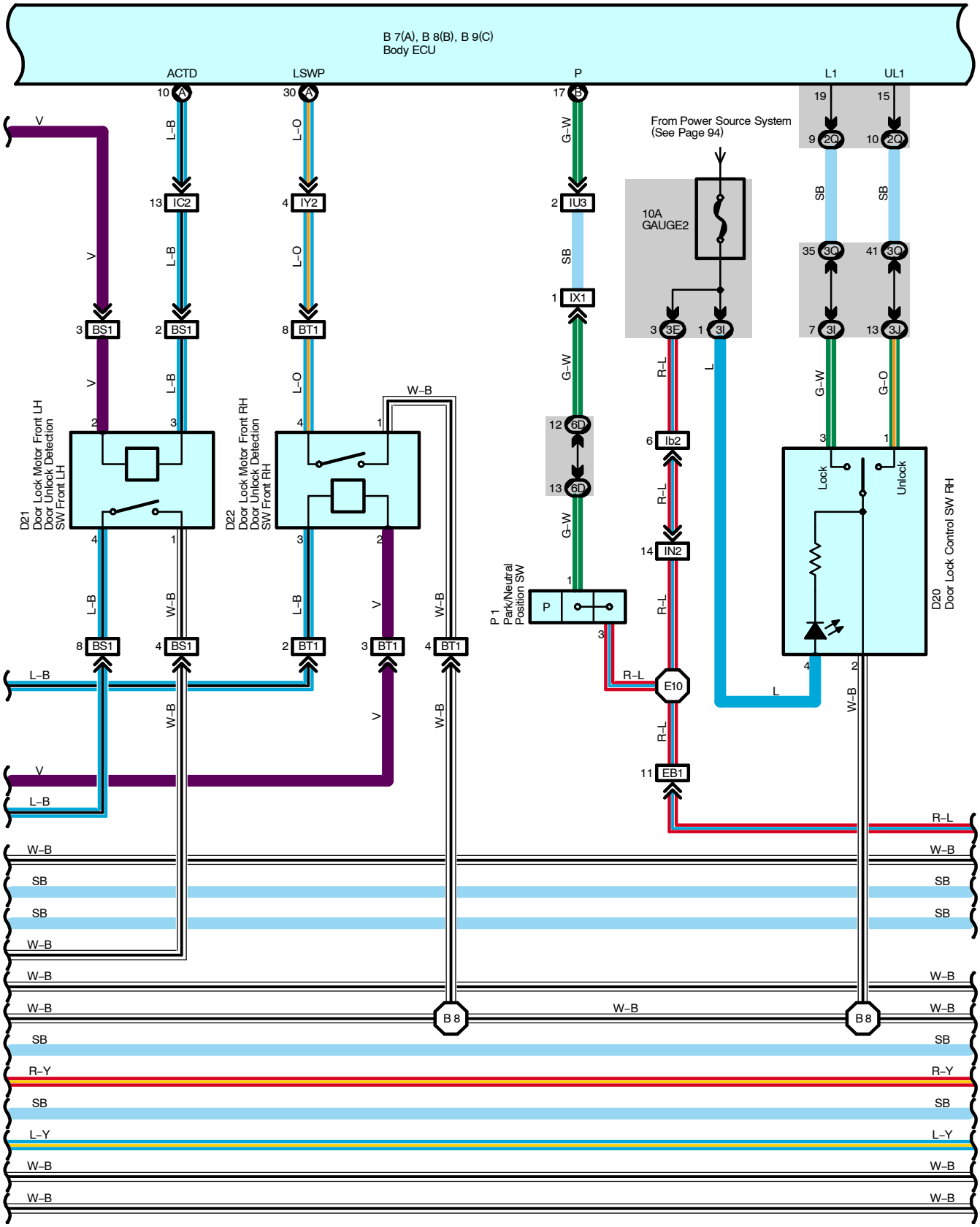
B 7(A), B 8(B), B 9(C)
Body ECU
ACTD
LSWP
P
L1
UL1
From Power Source System
(See Page 94)
10A
GAUGE2
D21
Door Lock Motor Front LH
Door Unlock Detection
SW Front LH
D22
Door Lock Motor Front RH
Door Unlock Detection
SW Front RH
P 1
Park/Neutral
Position SW
D20
Door Lock Control SW RH
Lock
Unlock
B 8

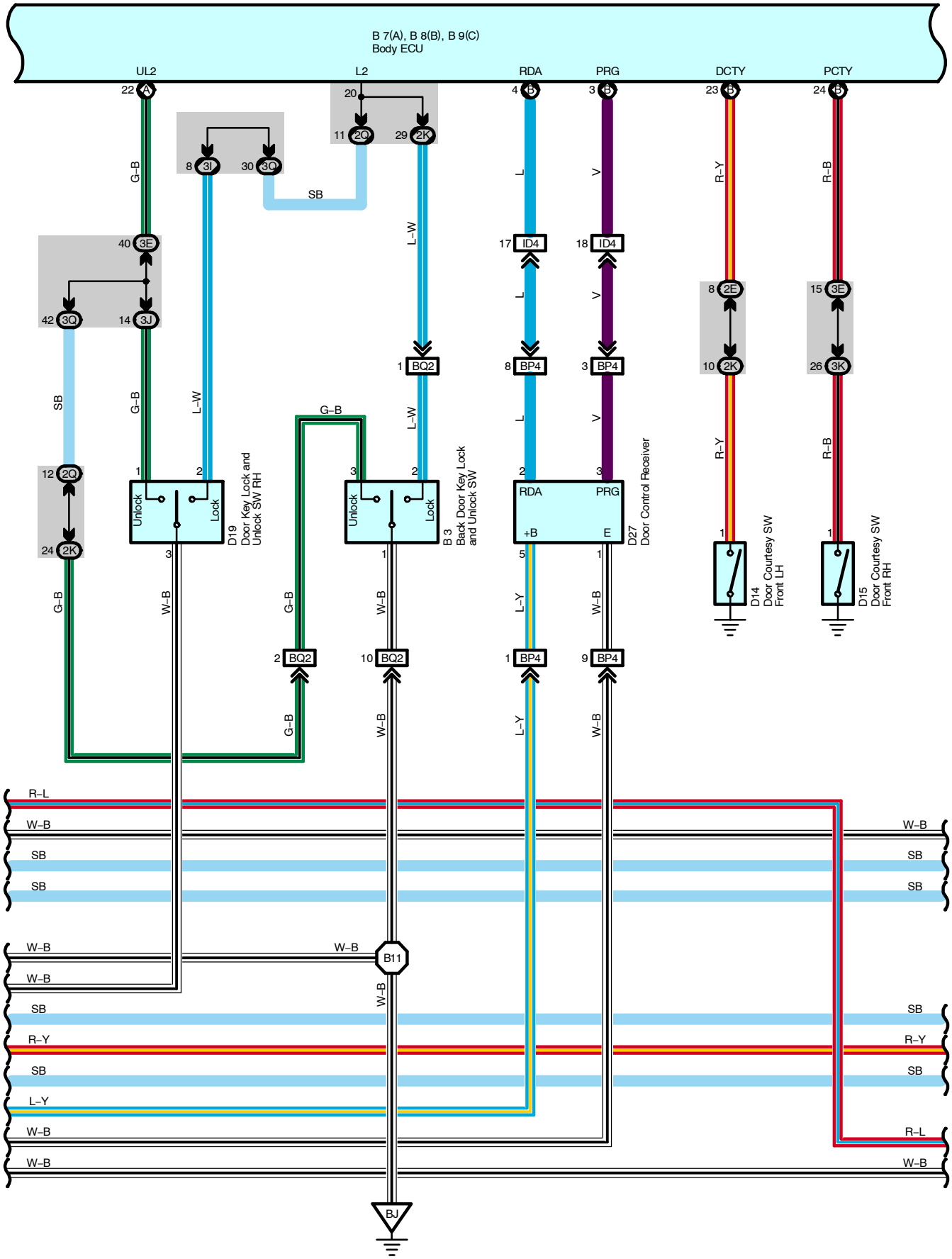
B 7(A), B 8(B), B 9(C)
Body ECU
UL2
L2
RDA
PRG
DCTY
PCTY
D19
Door Key Lock and
Unlock SW RH
B 3
Back Door Key Lock
and Unlock SW
D27
Door Control Receiver
D14
Door Courtesy SW
Front LH
D15
Door Courtesy SW
Front RH
Unlock
Lock
RDA
PRG
+B
E
B11
BJ

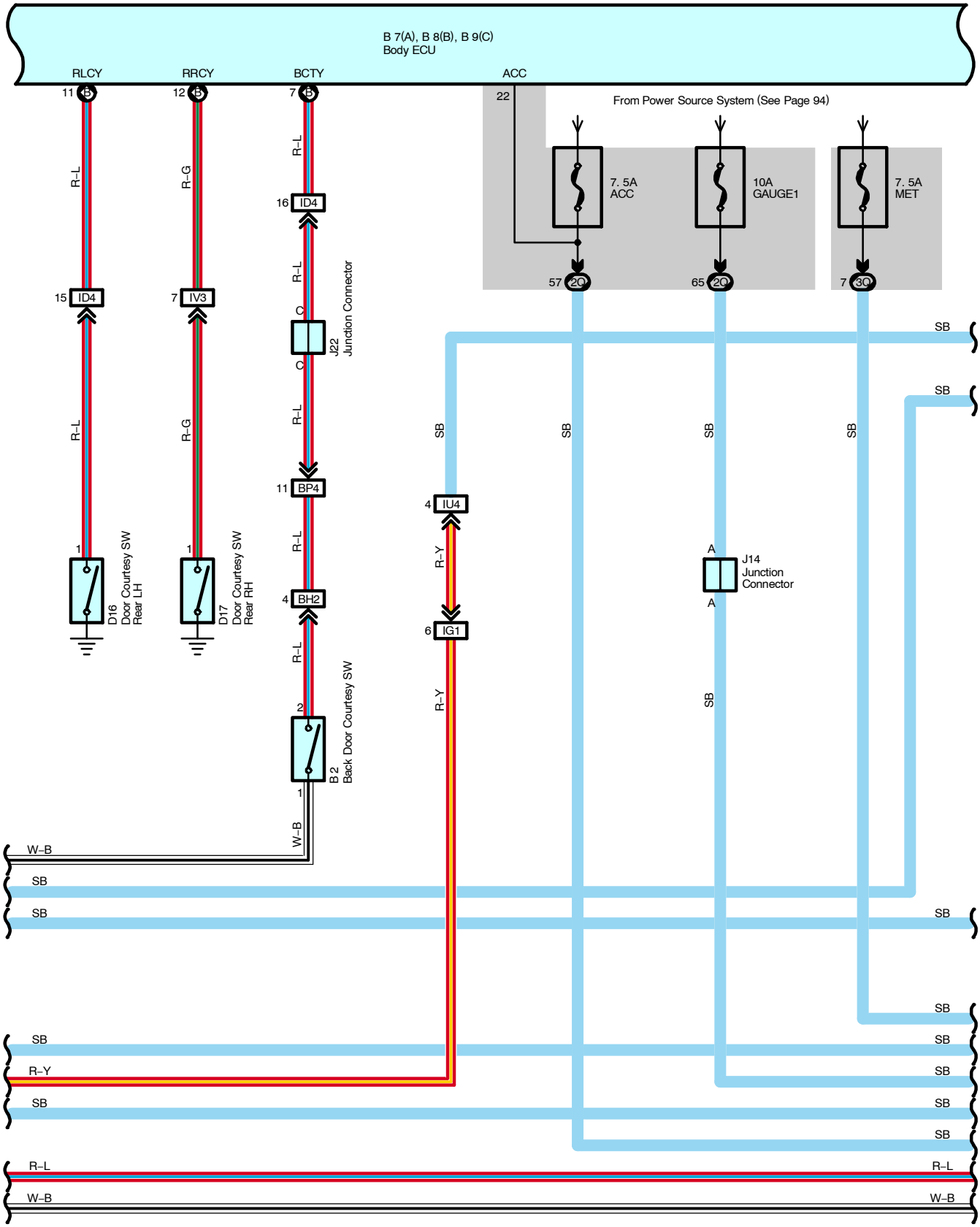
B 7(A), B 8(B), B 9(C)
Body ECU
RLCY
RRCY
BCTY
ACC
11
12
7
22
From Power Source System (See Page 94)
7. 5A
ACC
10A
GAUGE1
7. 5A
MET
57
65
7
R-L
R-G
16
ID4
15
ID4
7
IV3
C
J22
Junction Connector
11
BP4
4
IU4
R-Y
6
IG1
4
BH2
2
1
B 2
Back Door Courtesy SW
D16
Door Courtesy SW
Rear LH
D17
Door Courtesy SW
Rear RH
A
J14
Junction
Connector
SB
W-B

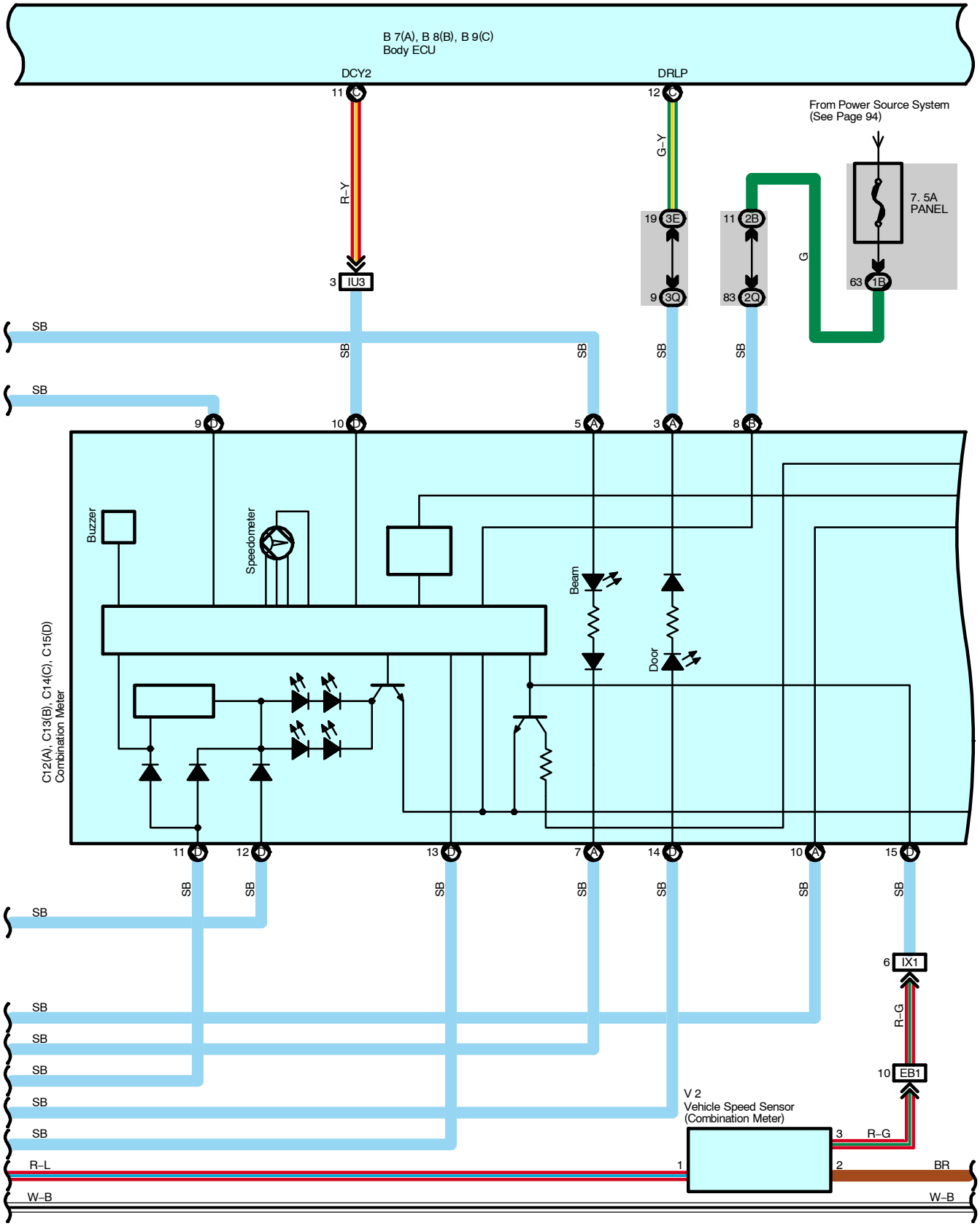
B 7(A), B 8(B), B 9(C)
Body ECU
DCY2
DRLP
11
12
R–Y
G–Y
From Power Source System
(See Page 94)
7. 5A
PANEL
19 3E
9 3Q
11 2B
83 2Q
G
63 1B
3 IU3
SB
SB
SB
SB
SB
SB
9
10
5
3
8
Buzzer
Speedometer
Beam
Door
C12(A), C13(B), C14(C), C15(D)
Combination Meter
11
12
13
7
14
10
15
SB
SB
SB
SB
SB
SB
SB
6 IX1
R–G
10 EB1
V 2
Vehicle Speed Sensor
(Combination Meter)
3
R–G
R–L
1
2
BR
W–B
W–B

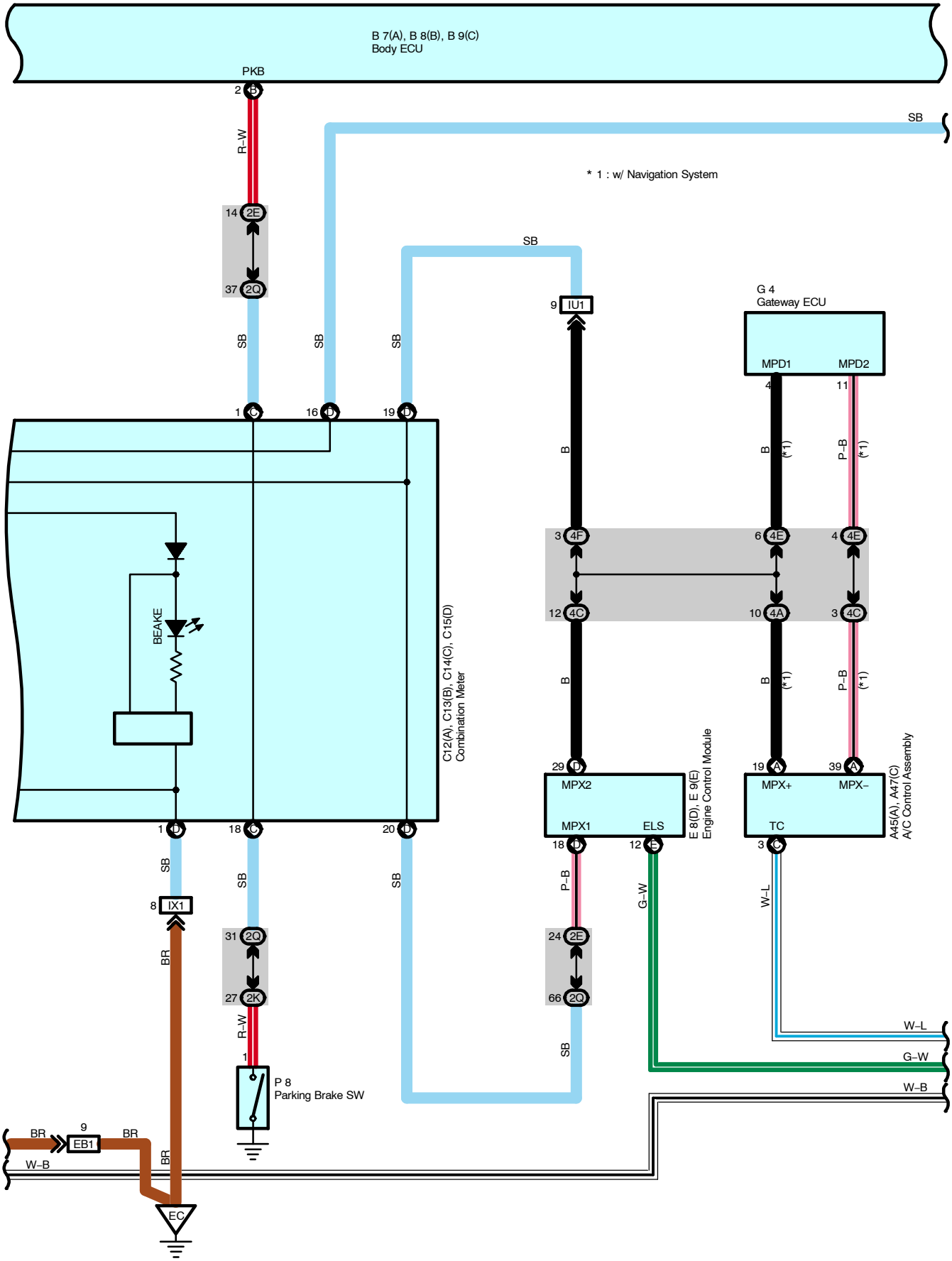
B 7(A), B 8(B), B 9(C)
Body ECU
PKB
2 5
R–W
SB
* 1 : w/ Navigation System
14 2E
37 2Q
SB
SB
SB
SB
9 IU1
G 4
Gateway ECU
MPD1
MPD2
4
11
1 C
16 D
19 D
B
B (*1)
P–B (*1)
3 4F
6 4E
4 4E
12 4C
10 4A
3 4C
BEAKE
B
B (*1)
P–B (*1)
C12(A), C13(B), C14(C), C15(D)
Combination Meter
29 D
MPX2
MPX1
ELS
E 8(D), E 9(E)
Engine Control Module
19 A
39 A
MPX+
MPX–
TC
A45(A), A47(C)
A/C Control Assembly
1 D
18 C
20 D
18 D
12 E
3 C
SB
SB
SB
P–B
G–W
W–L
8 IX1
BR
31 2Q
27 2K
24 2E
66 2Q
R–W
1
SB
W–L
G–W
W–B
P 8
Parking Brake SW
BR
9
EB1
BR
W–B
BR
EC

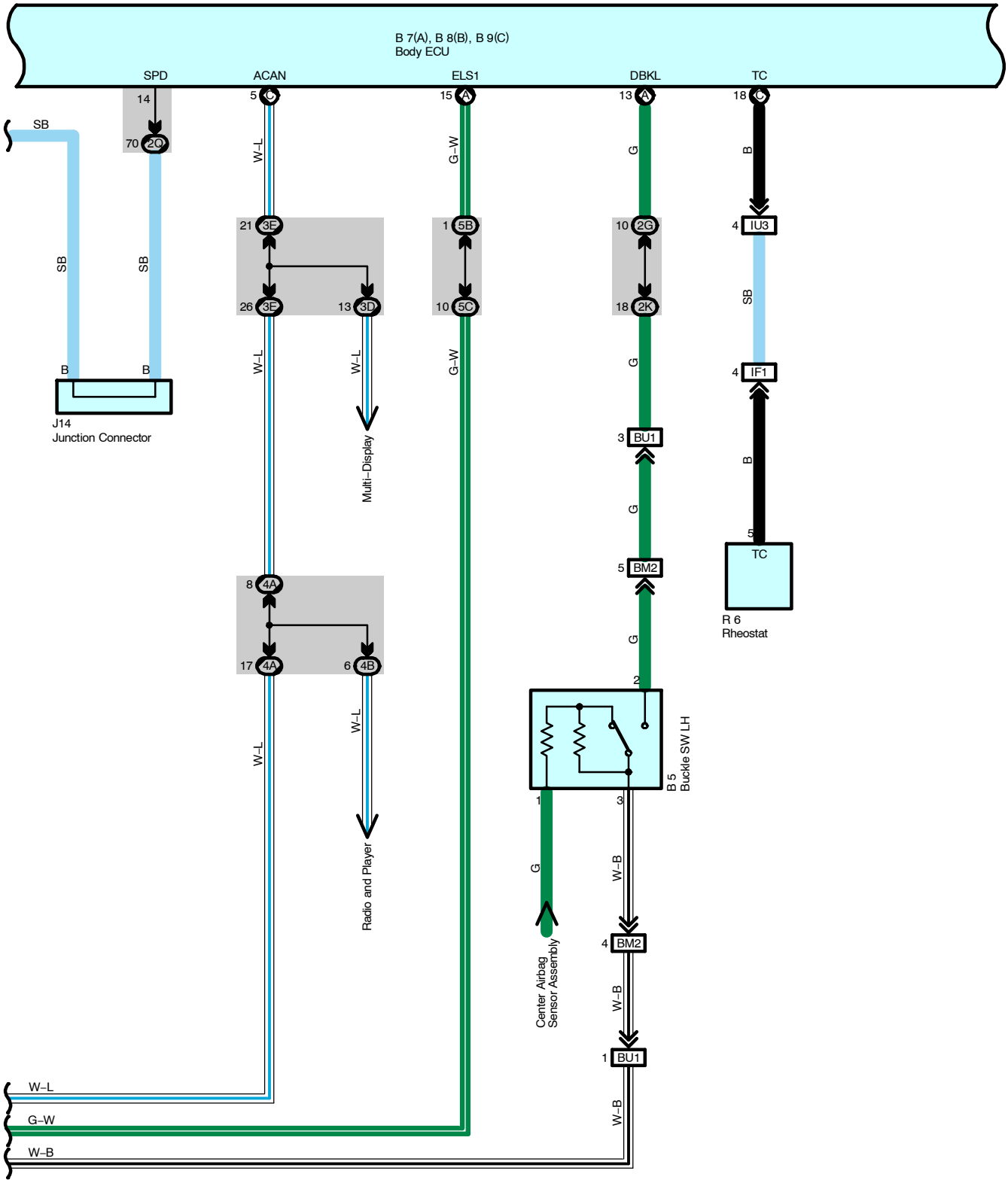
B 7(A), B 8(B), B 9(C)
Body ECU
SPD
ACAN
ELS1
DBKL
TC
14
70 2Q
5 C
15 A
13 A
18 C
SB
W–L
G–W
G
B
21 3E
26 3E
13 3D
1 5B
10 5C
10 2G
18 2K
4 IU3
4 IF1
SB
B
B
J14
Junction Connector
Multi–Display
3 BU1
5 BM2
5
TC
R 6
Rheostat
8 4A
17 4A
6 4B
2
B 5
Buckle SW LH
1
3
Radio and Player
W–B
4 BM2
Center Airbag
Sensor Assembly
1 BU1
W–L
G–W
W–B

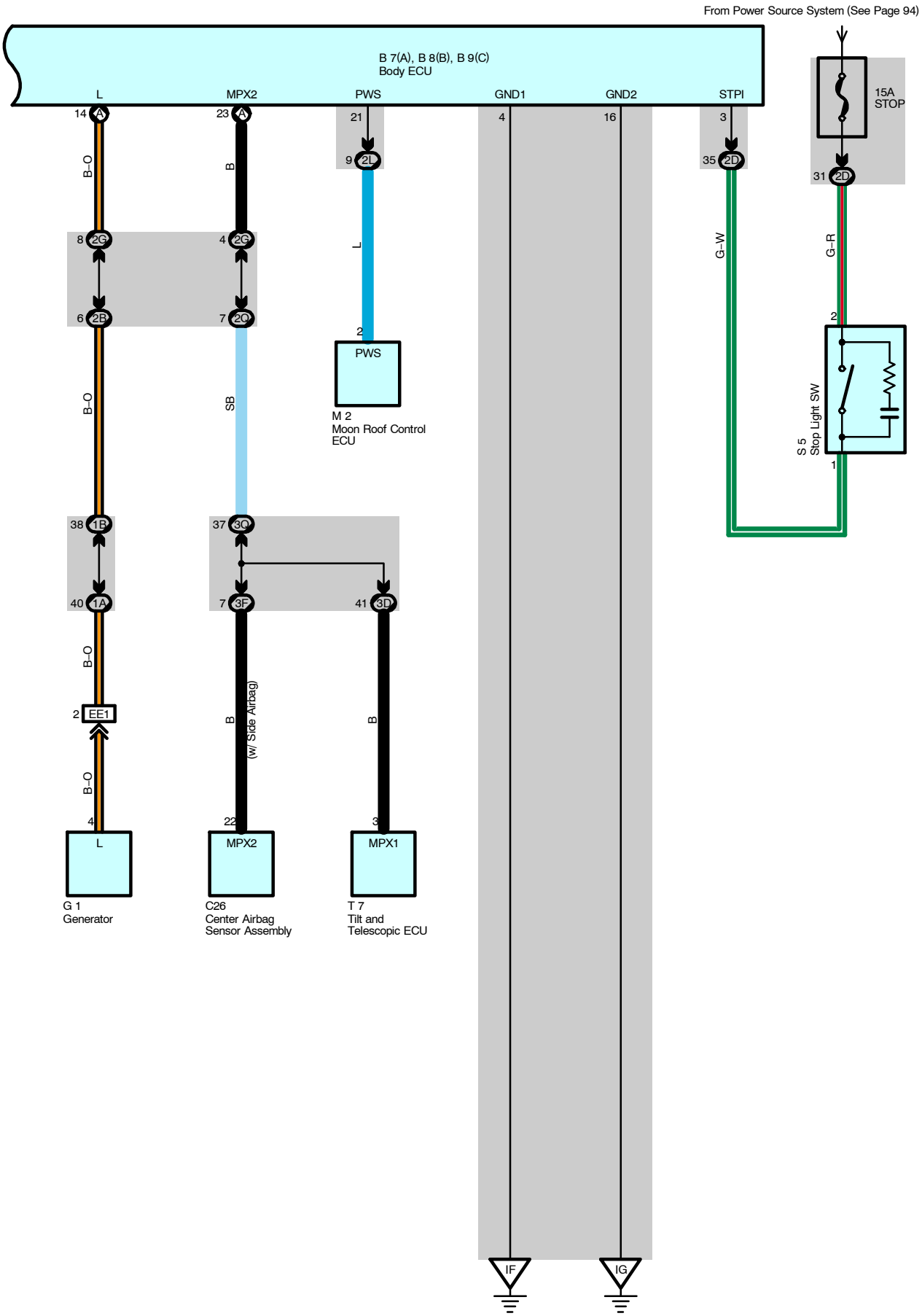
From Power Source System (See Page 94)
B 7(A), B 8(B), B 9(C)
Body ECU
L
MPX2
PWS
GND1
GND2
STPI
14 A
23 A
21
4
16
3
9 2L
35 2D
31 2D
15A
STOP
B–O
B
L
G–W
G–R
8 2G
4 2G
6 2B
7 2Q
2
PWS
M 2
Moon Roof Control
ECU
S 5
Stop Light SW
1
B–O
SB
38 1B
37 3Q
40 1A
7 3F
41 3D
B–O
2 EE1
B
(w/ Side Airbag)
B
B–O
4
22
3
L
MPX2
MPX1
G 1
Generator
C26
Center Airbag
Sensor Assembly
T 7
Tilt and
Telescopic ECU
IF
IG

Multiplex Communication System

System Outline

The multiplex communication system communicates among the body ECU, theft deterrent ECU, power window master SW, power window control SW front RH, power window control SW rear LH, power window control SW rear RH, center airbag sensor assembly and tilt and telescopic ECU, among the combination meter, engine control module, A/C control assembly and gateway ECU and controls the following systems according to the signals from respective sensors or switches.
For details, please refer to the new car features and/or the repair manual.

Service Hints

Body ECU

11, 12–Ground : Always approx. 12 volts
22–Ground : Approx. 12 volts with ignition SW at ACC or ON position
10–Ground : Approx. 12 volts with ignition SW at ON or ST position
4, 16–Ground : Always continuity

○ : **Parts Location**

Code		See Page	Code		See Page	Code		See Page
A31		70	D19		72	M2		72
A45	A	70	D20		72	M5	A	71
A47	C	70	D21		72	M8	C	71
B2		72	D22		72	M9	B	71
B3		72	D23		72	P1		69
B4		72	D24		72	P8		73
B5		74	D27		72	P12		73
B7	A	70	E3		68	P14		73
B8	B	70	E8	D	70	P15		73
B9	C	70	E9	E	70	P16		73
C12	A	70	F1		68	P17		73
C13	B	70	F2		68	P18		73
C14	C	70	F10		72	P19		73
C15	D	70	F11		72	P20		73
C16		70	F15		68	R6		71
C26		70	G1		68	R27		73
D2	A	68	G4		70	S5		71
D3	B	68	H1		69	T1		69
D7		70	H2		69	T5		71
D10		72	H3		69	T7		71
D11		72	H4		69	T10		71
D12		72	J3		71	U1		71
D13		72	J6		71	V2		69
D14		72	J9		71	V6		73
D15		72	J10		71	V7		73
D16		72	J13		71	Z1		71
D17		72	J14		71			
D18		72	J22		72			

: **Junction Block and Wire Harness Connector**

Code	See Page	Junction Block and Wire Harness (Connector Location)
1A	24	Engine Room Main Wire and Engine Room J/B (Engine Compartment Left)
1B	24	Engine Room No.2 Wire and Engine Room J/B (Engine Compartment Left)
1C		
2A	28	Engine Room No.2 Wire and Cowl Side J/B LH (Left Kick Panel)
2B		
2D	28	Dash Wire and Cowl Side J/B LH (Left Kick Panel)
2E		
2G		
2I	28	Front Door LH Wire and Cowl Side J/B LH (Left Kick Panel)
2J		
2K	28	Floor No.1 Wire and Cowl Side J/B LH (Left Kick Panel)
2L	28	Roof No.1 Wire and Cowl Side J/B LH (Left Kick Panel)
2Q	30	Instrument Panel Integration Wire and Cowl Side J/B LH (Left Kick Panel)
3B	40	Engine Room No.2 Wire and Cowl Side J/B RH (Right Kick Panel)
3D	40	Dash Wire and Cowl Side J/B RH (Right Kick Panel)
3E		
3F		
3I	40	Front Door RH Wire and Cowl Side J/B RH (Right Kick Panel)
3J		
3K	40	Floor No.2 Wire and Cowl Side J/B RH (Right Kick Panel)
3P	43	Dash Wire and Cowl Side J/B RH (Right Kick Panel)
3Q	42	Instrument Panel Integration Wire and Cowl Side J/B RH (Right Kick Panel)
4A	52	Dash Wire and J/B No.4 (Instrument Panel Center)
4B		
4C		
4D		
4E		
4F		
5B	56	Dash Wire and J/B No.5 (Behind the Combination Meter)
5C		
5D	56	Engine Room No.2 Wire and J/B No.5 (Behind the Combination Meter)
6D	60	Engine Wire and J/B No.6 (Behind the Grove Box)
7B	64	Dash Wire and J/B No.7 (Behind the Grove Box)

: **Connector Joining Wire Harness and Wire Harness**

Code	See Page	Joining Wire Harness and Wire Harness (Connector Location)
EA2	76	Engine Room Main Wire and Engine Room No.2 Wire (Engine Compartment Right)
EB1	76	Engine Wire and Transmission Wire (On the Transmission)
EE1	76	Engine Room Main Wire and Alternator Wire (Near the Battery)
IC2	78	Front Door LH Wire and Dash Wire (Left Kick Panel)
ID4	78	Dash Wire and Floor No.1 Wire (Left Kick Panel)
IF1	78	Instrument Panel Integration Wire and Instrument Panel Wire (Left Side of Instrument Panel)
IG1	78	Engine Room No.2 Wire and Dash Wire (Behind the Combination Meter)
IH2	80	Instrument Panel Integration Wire and Column Wire (Near the Ignition SW)
II3	80	Dash Wire and Column Wire (Near the Ignition SW)
II5		
IL3	80	Instrument Panel Integration Wire and Computer Wire (Instrument Panel Center)
IM2	80	Instrument Panel Integration Wire and Instrument Panel No.3 Wire (Right Side of Instrument Panel)
IN2	80	Engine Wire and Dash Wire (Behind the Glove Box)
IU1	82	Instrument Panel Integration Wire and Dash Wire (Behind the Glove Box)
IU3		
IU4		
IV3	82	Dash Wire and Floor No.2 Wire (Right Kick Panel)
IV4		
IX1	82	Instrument Panel Integration Wire and Engine Wire (Behind the Glove Box)
IY2	82	Front Door RH Wire and Dash Wire (Right Kick Panel)
Ib2	84	Dash Wire and Dash Wire (Behind the Combination Meter)
BA3	86	Rear Door LH Wire and Floor No.1 Wire (Left Side of Center Pillar)
BA4		
BC3	86	Rear Door RH Wire and Floor No.2 Wire (Right Side of Center Pillar)
BC4		
BD4	86	Floor No.3 Wire and Floor No.1 Wire (Left Rear Side Quarter Panel)
BH1	86	Pillar No.1 Wire and Back Door Upper Wire (Left Side of Back Door)
BH2		
BL5	88	Floor No.2 Wire and Floor No.3 Wire (Right Side of Rear Floor Crossmember)
BM2	90	Floor No.1 Wire and Front Seat LH Wire (Front Side Under the Driver's Seat)
BP3	88	Pillar No.1 Wire and Floor No.1 Wire (Left Rear Side Quarter Panel)
BP4		
BQ2	88	Back Door Lower Wire and Floor No.1 Wire (Left Rear Side Quarter Panel)
BR1	88	Roof No.3 Wire and Roof No.1 Wire (Front Side of Roof)
BS1	88	Door Lock LH Sub Wire and Front Door LH Wire (Front Door LH)
BT1	88	Door Lock RH Sub Wire and Front Door RH Wire (Front Door RH)
BU1	88	Floor No.1 Wire and Floor No.1 Wire (Near the Left Rear Suspension Support)

: **Ground Points**

Code	See Page	Ground Points Location
EA	76	Front Right Side of Fender Apron
EC	76	Rear Bank of Right Cylinder Head
IF	78	Set Bolt of Cowl Side J/B LH
IG		
II	78	Set Bolt of Cowl Side J/B RH
BJ	86	Under the Driver's Seat
BK	86	Front Side Under the Front Passenger's Seat

: **Splice Points**

Code	See Page	Wire Harness with Splice Points	Code	See Page	Wire Harness with Splice Points
E1	76	Engine Room Main Wire	B6	88	Floor No.1 Wire
E2			B7	88	Roof Wire
E10	76	Engine Wire	B8	88	Front Door RH Wire
E15	76	Engine Room Main Wire	B9	88	Floor No.2 Wire
B2	88	Front Door LH Wire	B11	88	Floor No.1 Wire
B4	88	Floor No.1 Wire	B15	88	Back Door Upper Wire
B5					