FRONT HEATER UNIT

COMPONENTS
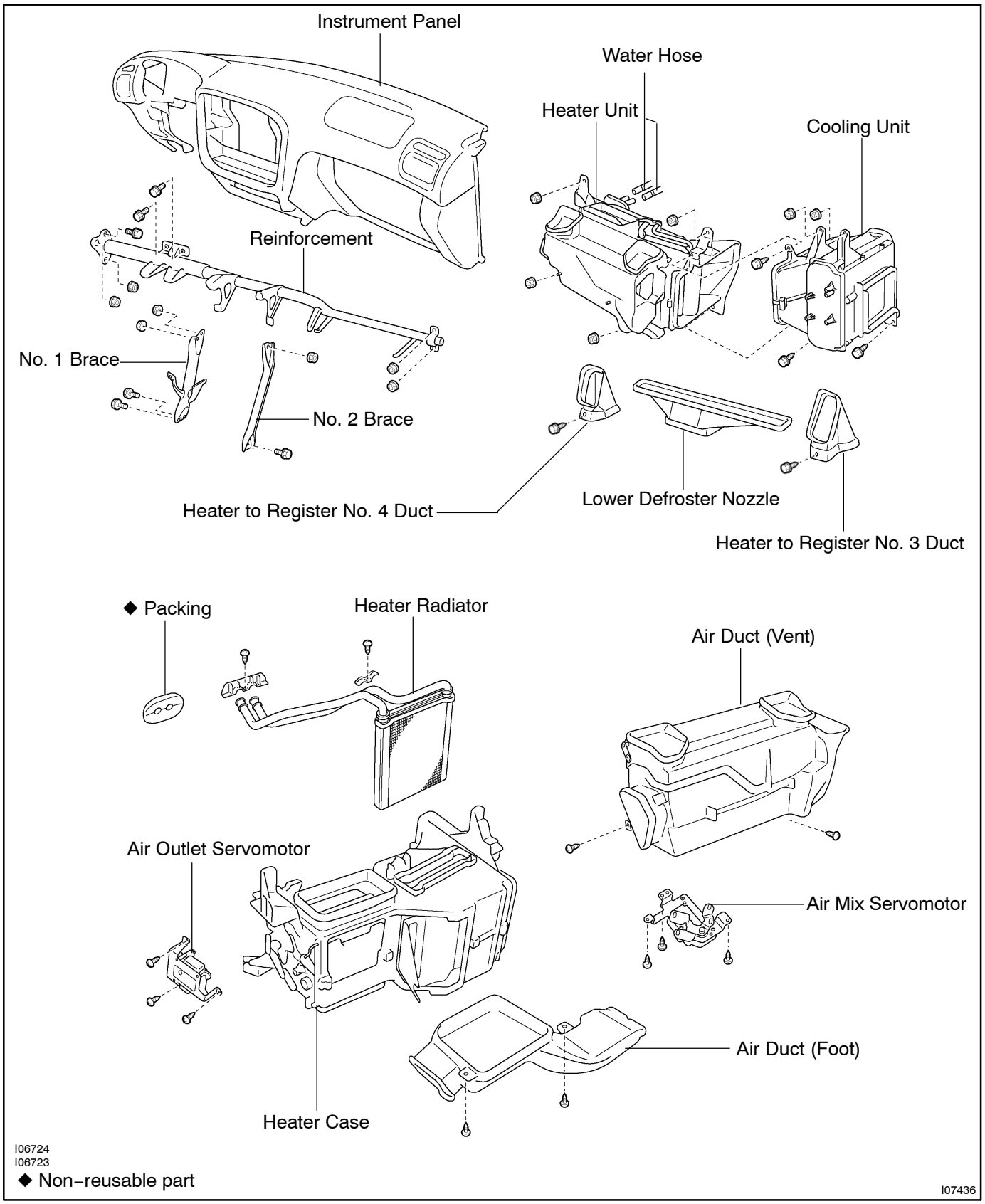
AC1KH–03