1 LAND CRUISER (LHD)

(Cont. next page)

Power Source

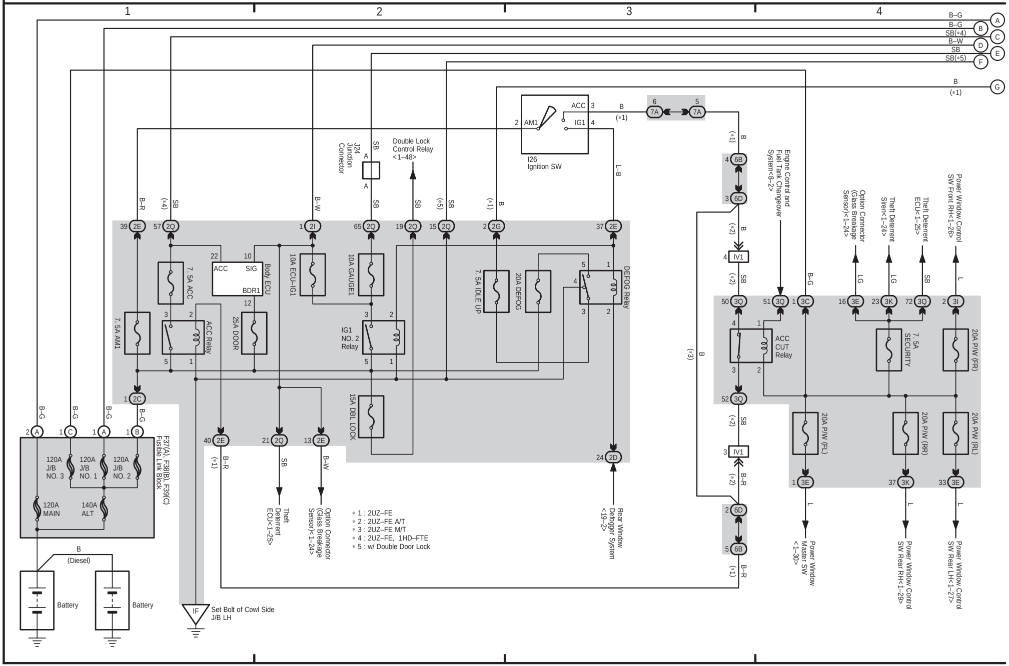
1
2
3
4
B–G A
B–G B
SB(*4) C
B–W D
SB E
SB(*5) F
B (*1) G
I26
Ignition SW
AM1
ACC
IG1
B (*1)
7A
6B
6D
J24
Junction Connector
Double Lock Control Relay <1–48>
B–R
SB
B–W
L–B
2E
2Q
2I
2G
2C
2D
7. 5A ACC
ACC
SIG
BDR1
Body ECU
10A ECU–IG1
10A GAUGE1
7. 5A IDLE UP
20A DEFOG
DEFOG Relay
7. 5A AM1
ACC Relay
25A DOOR
IG1
NO. 2
Relay
15A DBL LOCK
F37(A), F38(B), F39(C)
Fusible Link Block
120A
J/B
NO. 3
120A
J/B
NO. 1
120A
J/B
NO. 2
120A
MAIN
140A
ALT
B
(Diesel)
Battery
Battery
IF
Set Bolt of Cowl Side J/B LH
Theft Deterrent ECU<1–25>
Option Connector (Glass Breakage Sensor)<1–24>
Rear Window Defogger System <19–2>
IV1
3Q
3C
3E
3K
3I
Engine Control and Fuel Tank Changeover System<8–2>
Option Connector (Glass Breakage Sensor)<1–24>
Theft Deterrent Siren<1–24>
Theft Deterrent ECU<1–25>
Power Window Control SW Front RH<1–26>
LG
L
ACC CUT Relay
7. 5A SECURITY
20A P/W (FR)
20A P/W (FL)
20A P/W (RR)
20A P/W (RL)
Power Window Master SW <1–30>
Power Window Control SW Rear RH<1–29>
Power Window Control SW Rear LH<1–27>

* 1 : 2UZ–FE
* 2 : 2UZ–FE A/T
* 3 : 2UZ–FE M/T
* 4 : 2UZ–FE, 1HD–FTE
* 5 : w/ Double Door Lock

(Cont. next page)

Multiplex Communication System

∗ 1 : 2UZ–FE
∗ 4 : 2UZ–FE, 1HD–FTE
∗ 5 : w/ Double Door Lock
∗ 6 : w/ Moon Roof
∗ 7 : w/o Moon Roof w/ Overhead Console
∗ 8 : w/o Moon Roof w/o Overhead Console

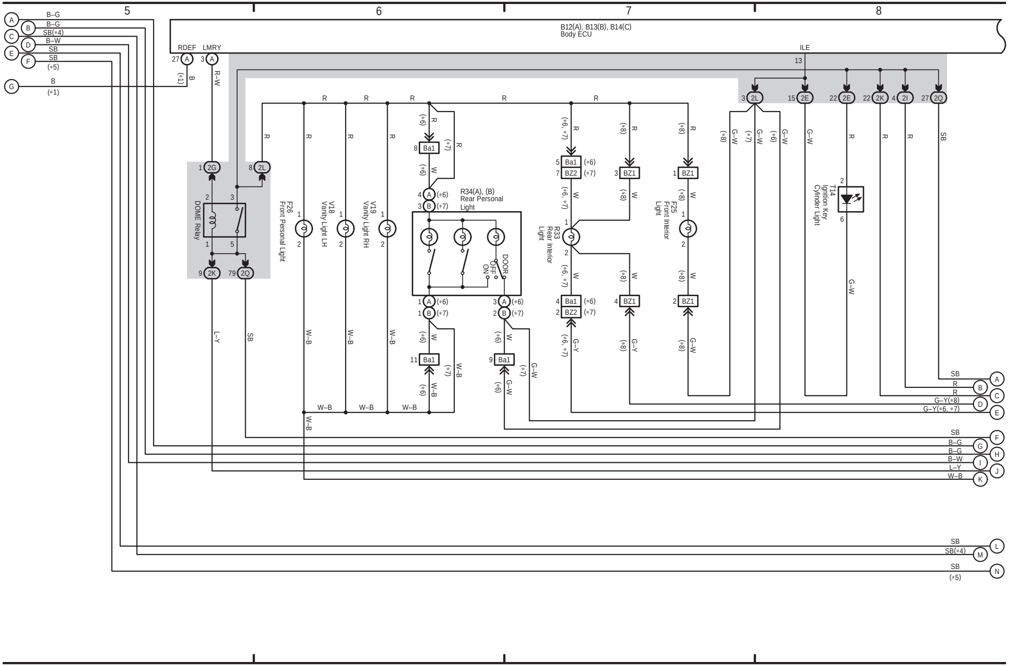
5
6
7
8
B12(A), B13(B), B14(C)
Body ECU
RDEF
LMRY
ILE
27 A
3 A
13
B–G
B–G
SB(∗4)
B–W
SB
SB
(∗5)
B
(∗1)
R–W
R
W
W–B
L–Y
SB
G–W
G–Y
1 2G
8 2L
9 2K
79 2Q
3 2L
15 2E
22 2E
22 2K
4 2I
27 2Q
DOME Relay
F26
Front Personal Light
V18
Vanity Light LH
V19
Vanity Light RH
R34(A), (B)
Rear Personal Light
DOOR
OFF
ON
Ba1
BZ1
BZ2
R33
Rear Interior Light
F25
Front Interior Light
T14
Ignition Key Cylinder Light
(∗6)
(∗7)
(∗6, ∗7)
(∗8)
G–Y(∗8)
G–Y(∗6, ∗7)
SB(∗4)
A
B
C
D
E
F
G
H
I
J
K
L
M
N

H

1 LAND CRUISER (LHD) (Cont' d) **(Cont. next page)**

∗ 4 : 2UZ–FE, 1HD–FTE
∗ 5 : w/ Double Door Lock
∗ 6 : w/ Moon Roof
∗ 7 : w/o Moon Roof w/ Overhead Console
∗ 8 : w/o Moon Roof w/o Overhead Console

Multiplex Communication System

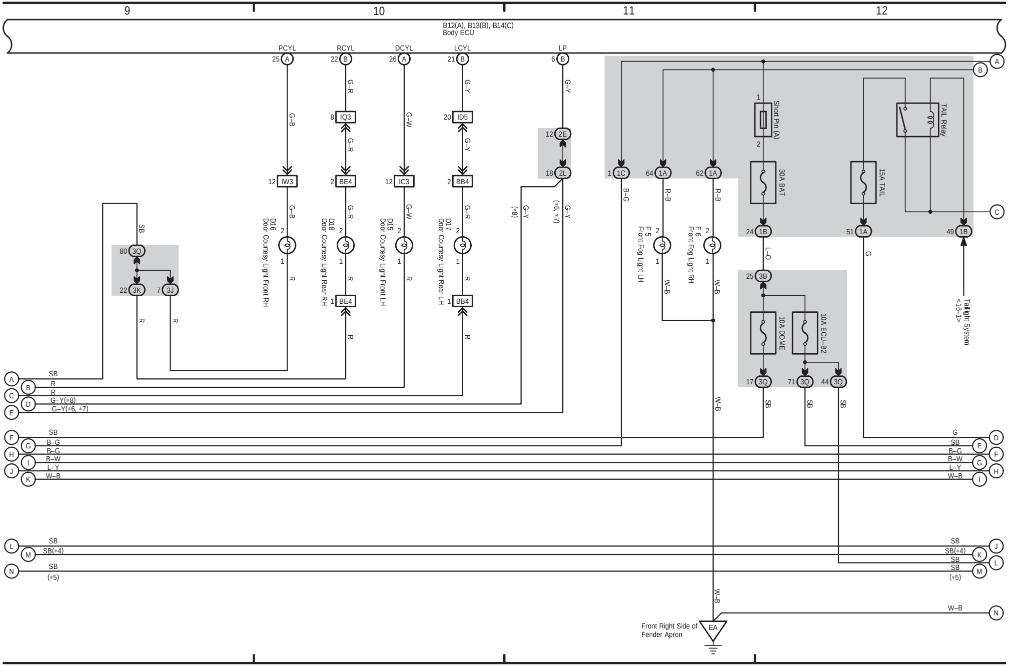
9
10
11
12
B12(A), B13(B), B14(C)
Body ECU
PCYL
RCYL
DCYL
LCYL
LP
25 A
22 B
26 A
21 B
6 B
G–B
G–R
G–W
G–Y
8 IQ3
20 ID5
12 2E
18 2L
12 IW3
2 BE4
12 IC3
2 BB4
D16
Door Courtesy Light Front RH
D18
Door Courtesy Light Rear RH
D15
Door Courtesy Light Front LH
D17
Door Courtesy Light Rear LH
(∗8)
(∗6, ∗7)
1 BE4
1 BB4
SB
R
80 3Q
22 3K
7 3J
1 1C
64 1A
62 1A
B–G
R–B
F 5
Front Fog Light LH
F 6
Front Fog Light RH
W–B
Short Pin (A)
30A BAT
15A TAIL
TAIL Relay
24 1B
51 1A
49 1B
L–O
G
25 3B
10A DOME
10A ECU–B2
17 3Q
71 3Q
44 3Q
Taillight System
<16–1>
A
B
C
D
E
F
G
H
I
J
K
L
M
N
G–Y(∗8)
G–Y(∗6, ∗7)
B–W
L–Y
SB(∗4)
(∗5)
Front Right Side of
Fender Apron
EA

1 LAND CRUISER (LHD) (Cont' d)

(Cont. next page)

∗ 4 : 2UZ–FE, 1HD–FTE
∗ 5 : w/ Double Door Lock
∗ 9 : w/ HID
∗10 : w/o HID
∗11 : Europe

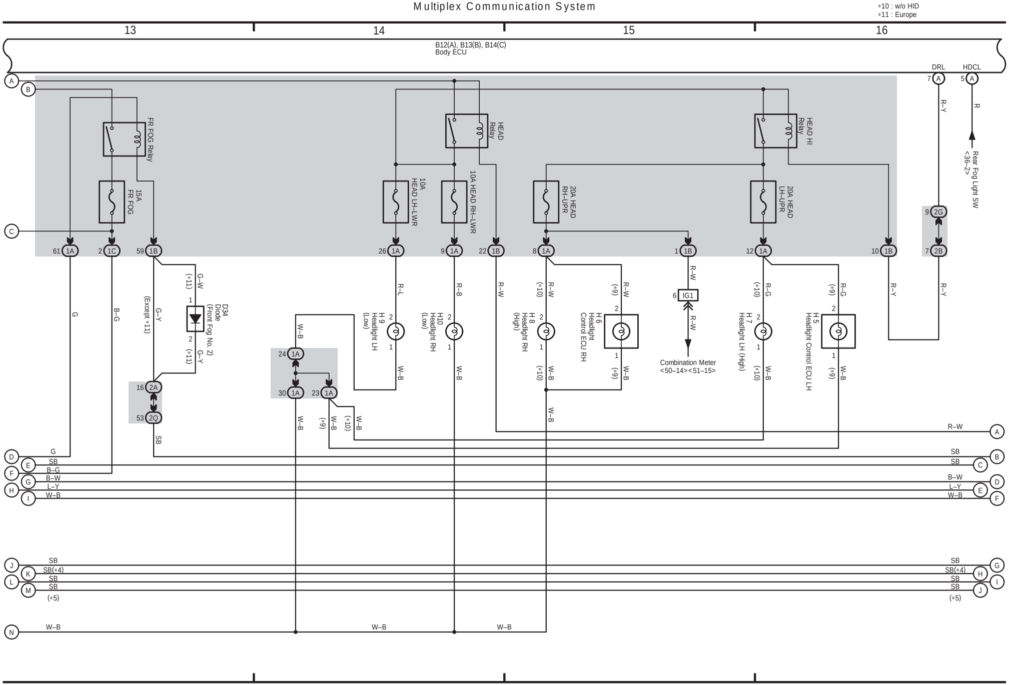
Multiplex Communication System
13
14
15
16
B12(A), B13(B), B14(C)
Body ECU
DRL
HDCL
7 A
5 A
A
B
C
FR FOG Relay
15A FR FOG
HEAD Relay
10A HEAD LH–LWR
10A HEAD RH–LWR
20A HEAD RH–UPR
HEAD HI Relay
20A HEAD LH–UPR
R–Y
R
Rear Fog Light SW <36–2>
9 2G
7 2B
61 1A
2 1C
59 1B
26 1A
9 1A
22 1B
8 1A
1 1B
12 1A
10 1B
G
B–G
G–W
(∗11)
D34 Diode (Front Fog No. 2)
G–Y
(Except ∗11)
16 2A
53 2Q
SB
R–L
H 9 Headlight LH (Low)
R–B
H10 Headlight RH (Low)
R–W
H 8 Headlight RH (High)
H 6 Headlight Control ECU RH
(∗9)
(∗10)
6 IG1
Combination Meter <50–14><51–15>
R–G
H 7 Headlight LH (High)
H 5 Headlight Control ECU LH
W–B
24 1A
30 1A
23 1A
D
E
F
G
H
I
J
K
L
M
N
G
SB
B–G
B–W
L–Y
W–B
SB(∗4)
(∗5)
R–W
A
B
C
D
E
F
G
H
I
J

1 LAND CRUISER (LHD) (Cont' d)

Multiplex Communication System

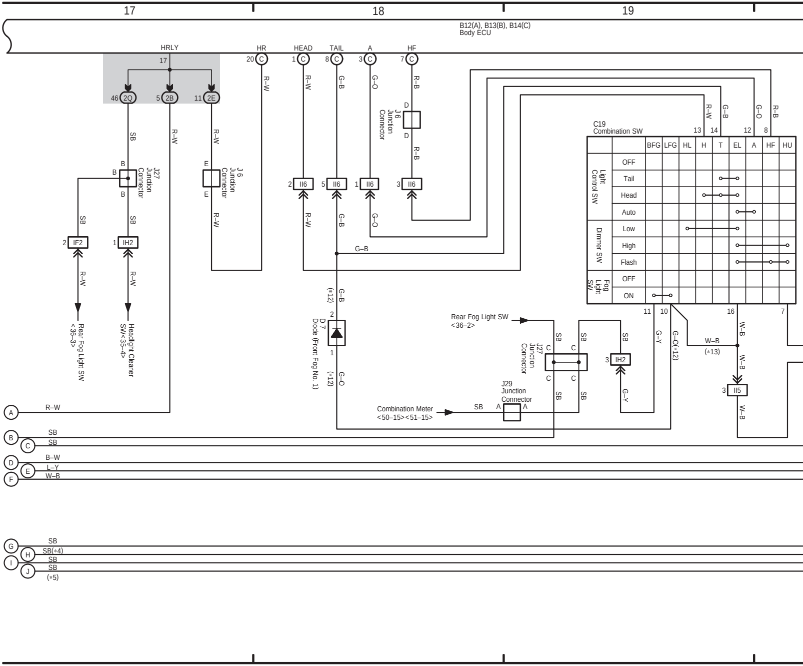
17
18
19
B12(A), B13(B), B14(C)
Body ECU
HRLY
17
46 2Q
5 2B
11 2E
HR
20 C
HEAD
1 C
TAIL
8 C
A
3 C
HF
7 C
R–W
G–B
G–O
R–B
SB
B
B
B
J27
Junction
Connector
E
E
J 6
Junction
Connector
D
D
J 6
Junction
Connector
2 II6
5 II6
1 II6
3 II6
2 IF2
1 IH2
Rear Fog Light SW
<36–3>
Headlight Cleaner
SW<35–4>
G–B
(*12)
2
D 7
Diode (Front Fog No. 1)
1
G–O
(*12)
Rear Fog Light SW
<36–2>
J27
Junction
Connector
C
C
C
C
J29
Junction
Connector
A
A
Combination Meter
<50–15><51–15>
3 IH2
G–Y
G–O(*12)
W–B
(*13)
3 II5
C19
Combination SW
13
14
12
8
11
10
16
7
A
R–W
B
SB
C
SB
D
B–W
E
L–Y
F
W–B
G
SB
H
SB(*4)
I
SB
J
SB
(*5)

C19 Combination SW

		BFG	LFG	HL	H	T	EL	A	HF	HU
Light Control SW	OFF									
	Tail					○	○			
	Head				○	○	○			
	Auto						○	○		
Dimmer SW	Low			○	—	—	○			
	High						○	—	—	○
	Flash						○	—	○	○
Fog Light SW	OFF									
	ON	○	○							

(Cont. next page)

*4 : 2UZ–FE, 1HD–FTE
*5 : w/ Double Door Lock
*12 : w/ Daytime Running Light
*13 : w/o Daytime Running Light
*14 : Automatic A/C

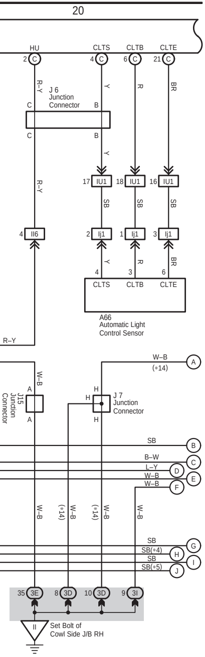

20
HU
CLTS
CLTB
CLTE
2 C
4 C
6 C
21 C
R–Y
Y
R
BR
J 6
Junction Connector
C
B
17 IU1
18 IU1
16 IU1
SB
4 II6
2 IJ1
1 IJ1
3 IJ1
4
3
6
A66
Automatic Light Control Sensor
W–B
(*14)
A
J15
Junction Connector
J 7
Junction Connector
H
SB
B
B–W
C
L–Y
D
E
F
G
SB(*4)
H
I
SB(*5)
J
(*14)
35 3E
8 3D
10 3D
9 3I
II
Set Bolt of Cowl Side J/B RH

H OVERALL ELECTRICAL WIRING DIAGRAM

LAND CRUISER Station Wagon (EWD602E)

1 LAND CRUISER (LHD) (Cont' d)

Multiplex Communication System

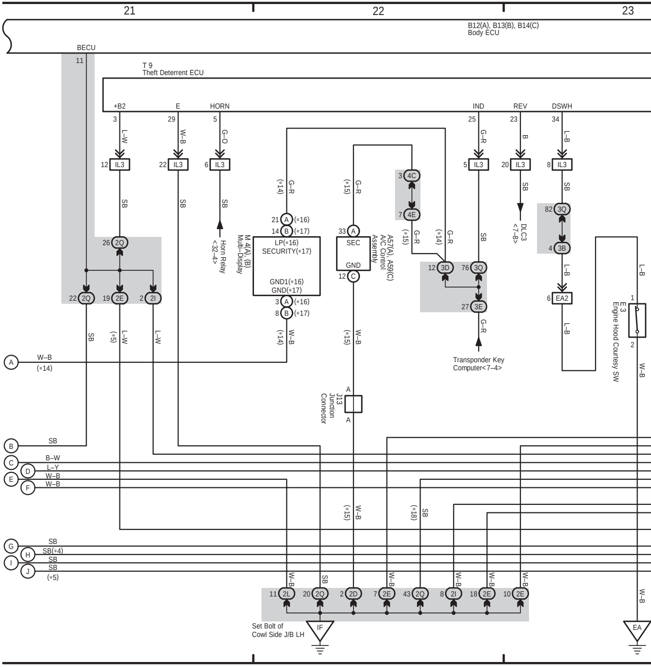

21
22
23
B12(A), B13(B), B14(C)
Body ECU
BECU
11
T 9
Theft Deterrent ECU
+B2
E
HORN
IND
REV
DSWH
3
29
5
25
23
34
L–W
W–B
G–O
G–R
B
L–B
12 IL3
22 IL3
6 IL3
5 IL3
20 IL3
8 IL3
SB
Horn Relay <32–4>
DLC3 <7–8>
82 3Q
4 3B
6 EA2
26 2Q
22 2Q
19 2E
2 2I
(*5)
(*14)
(*15)
(*16)
(*17)
(*18)
21 A
14 B
M 4(A), (B)
Multi–Display
LP(*16)
SECURITY(*17)
GND1(*16)
GND(*17)
3 A
8 B
33 A
SEC
GND
12 C
A57(A), A59(C)
A/C Control Assembly
3 4C
7 4E
12 3D
76 3Q
27 3E
Transponder Key Computer<7–4>
1
2
E 3
Engine Hood Courtesy SW
J13
Junction Connector
A
B
C
D
E
F
G
H
I
J
B–W
L–Y
SB(*4)
11 2L
20 2Q
2 2D
7 2E
43 2Q
8 2I
18 2E
10 2E
IF
Set Bolt of Cowl Side J/B LH
EA

(Cont. next page)

∗ 4 : 2UZ–FE, 1HD–FTE
∗ 5 : w/ Double Door Lock
∗14 : Automatic A/C
∗15 : Except ∗14
∗16 : w/ Navigation System
∗17 : w/o Navigation System
∗18 : w/o Power Window

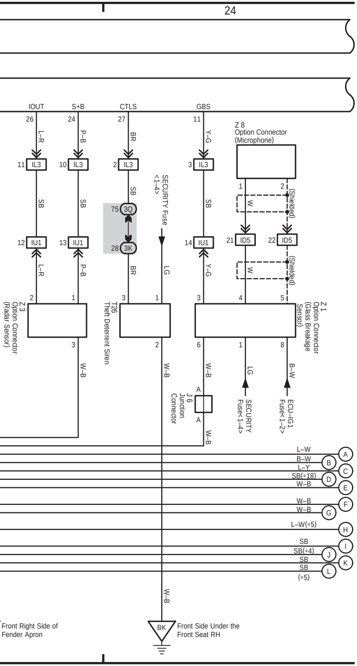
24
IOUT
S+B
CTLS
GBS
26
24
27
11
L–R
P–B
BR
Y–G
11 IL3
10 IL3
2 IL3
3 IL3
SB
75 3Q
28 3K
SECURITY Fuse <1–4>
12 IU1
13 IU1
14 IU1
L–R
P–B
BR
LG
Y–G
Z 8
Option Connector
(Microphone)
1
2
W
(Shielded)
21 ID5
22 ID5
2
1
3
1
3
4
5
Z 3
Option Connector
(Radar Sensor)
T26
Theft Deterrent Siren
Z 1
Option Connector
(Glass Breakage Sensor)
3
2
6
1
8
W–B
W–B
W–B
LG
B–W
A
J 6
Junction Connector
A
W–B
SECURITY Fuse<1–4>
ECU–IG1 Fuse<1–2>
L–W
A
B–W
B
L–Y
C
SB(∗18)
D
W–B
E
W–B
F
W–B
G
L–W(∗5)
H
SB
I
SB(∗4)
J
SB
K
SB
L
(∗5)
W–B
BK
Front Side Under the Front Seat RH
Front Right Side of Fender Apron

1 LAND CRUISER (LHD) (Cont' d)

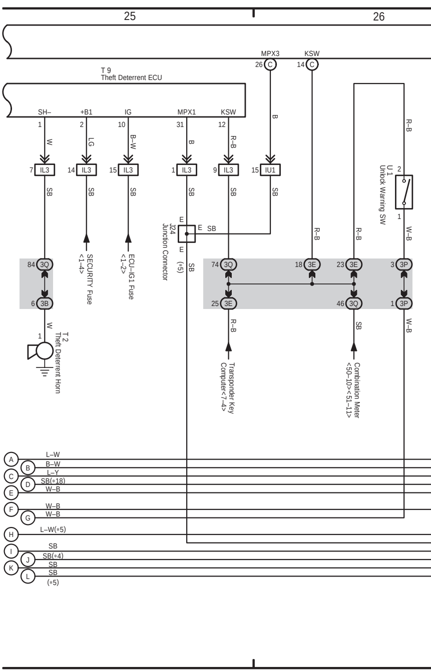
Mu
25
26
MPX3
KSW
26 C
14 C
T 9
Theft Deterrent ECU
SH–
+B1
IG
MPX1
KSW
1
2
10
31
12
W
LG
B–W
B
R–B
B
R–B
7 IL3
14 IL3
15 IL3
1 IL3
9 IL3
15 IU1
SB
SB
SB
SB
SB
SB
U 1
Unlock Warning SW
2
1
E
J24
Junction Connector
E
E
SB
(∗5)
SECURITY Fuse <1–4>
ECU–IG1 Fuse <1–2>
R–B
R–B
W–B
84 3Q
6 3B
74 3Q
25 3E
18 3E
23 3E
46 3Q
3 3P
1 3P
W
1
T 2
Theft Deterrent Horn
R–B
SB
W–B
Transponder Key Computer<7–4>
Combination Meter <50–10><51–11>
A
L–W
B
B–W
C
L–Y
D
SB(∗18)
E
W–B
F
W–B
G
W–B
H
L–W(∗5)
I
SB
J
SB(∗4)
K
SB
L
SB
(∗5)

ltiplex Communication System

∗ 4 : 2UZ–FE, 1HD–FTE
∗ 5 : w/ Double Door Lock
∗18 : w/o Power Window

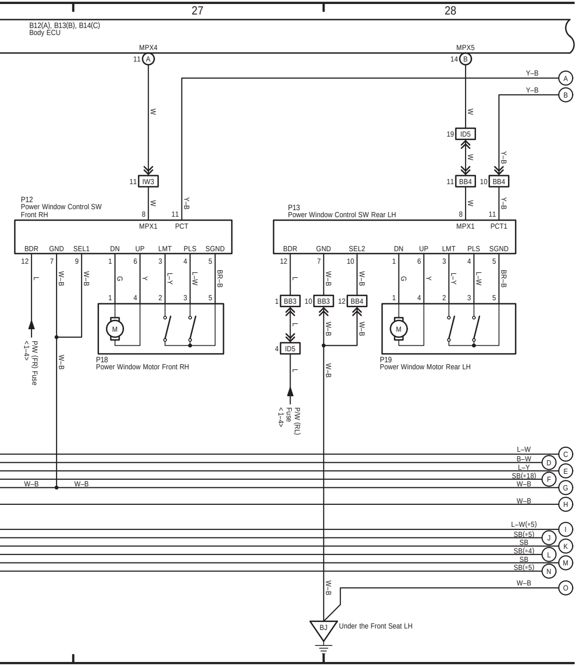
27
28
B12(A), B13(B), B14(C)
Body ECU
MPX4
11 A
MPX5
14 B
W
Y–B
A
Y–B
B
19 ID5
11 IW3
11 BB4
10 BB4
P12
Power Window Control SW
Front RH
8
11
MPX1
PCT
BDR
GND
SEL1
DN
UP
LMT
PLS
SGND
12
7
9
1
6
3
4
5
L
W–B
G
Y
L–Y
L–W
BR–B
M
P18
Power Window Motor Front RH
P/W (FR) Fuse
<1–4>
P13
Power Window Control SW Rear LH
MPX1
PCT1
BDR
GND
SEL2
10
1 BB3
10 BB3
12 BB4
4 ID5
P/W (RL)
Fuse
<1–4>
P19
Power Window Motor Rear LH
L–W
C
B–W
D
L–Y
E
SB(∗18)
F
W–B
G
W–B
H
L–W(∗5)
I
SB(∗5)
J
SB
K
SB(∗4)
L
SB
M
SB(∗5)
N
W–B
O
BJ
Under the Front Seat LH

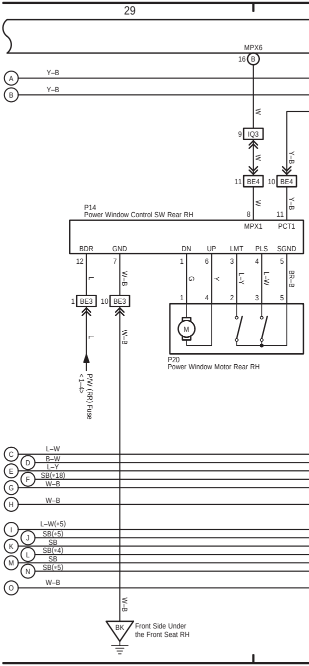
29
MPX6
16 B
A
Y–B
B
Y–B
W
9 IQ3
Y–B
11 BE4
10 BE4
P14
Power Window Control SW Rear RH
8
11
MPX1
PCT1
BDR
GND
DN
UP
LMT
PLS
SGND
12
7
1
6
3
4
5
L
W–B
G
Y
L–Y
L–W
BR–B
1 BE3
10 BE3
M
P20
Power Window Motor Rear RH
P/W (RR) Fuse
<1–4>
C
L–W
D
B–W
E
L–Y
F
SB(∗18)
G
W–B
H
W–B
I
L–W(∗5)
J
SB(∗5)
K
SB
L
SB(∗4)
M
SB
N
SB(∗5)
O
W–B
BK
Front Side Under
the Front Seat RH

(Cont. next page)

Multiplex Communication System

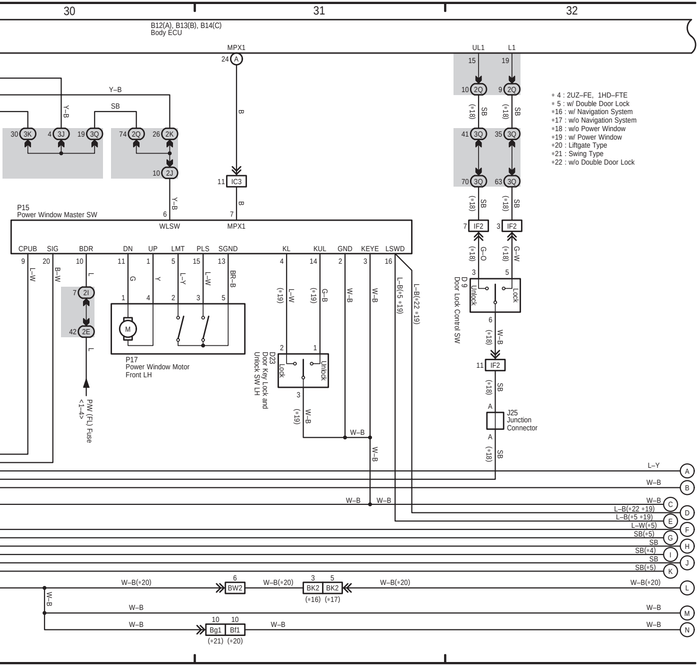
30
31
32
B12(A), B13(B), B14(C)
Body ECU
MPX1
UL1
L1
P15
Power Window Master SW
WLSW
MPX1
CPUB SIG BDR DN UP LMT PLS SGND KL KUL GND KEYE LSWD
P17
Power Window Motor
Front LH
D23
Door Key Lock and
Unlock SW LH
D 9
Door Lock Control SW
Lock
Unlock
J25
Junction
Connector
IC3
IF2
BW2
BK2
Bg1
Bf1
P/W (FL) Fuse
<1–4>
∗ 4 : 2UZ–FE, 1HD–FTE
∗ 5 : w/ Double Door Lock
∗16 : w/ Navigation System
∗17 : w/o Navigation System
∗18 : w/o Power Window
∗19 : w/ Power Window
∗20 : Liftgate Type
∗21 : Swing Type
∗22 : w/o Double Door Lock
L–Y
W–B
L–B(∗22 ∗19)
L–B(∗5 ∗19)
L–W(∗5)
SB(∗5)
SB
SB(∗4)
W–B(∗20)
A B C D E F G H I J K L M N

LAND CRUISER Station Wagon (EWD602E)

H

1 LAND CRUISER (LHD) (Cont' d)

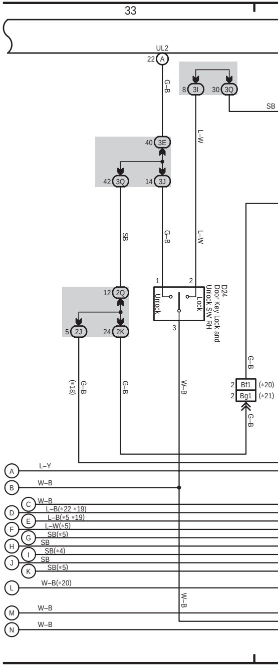
33
UL2
D24
Door Key Lock and
Unlock SW RH
Unlock
Lock
Bf1 (∗20)
Bg1 (∗21)
L–Y
W–B
L–B(∗22 ∗19)
L–B(∗5 ∗19)
L–W(∗5)
SB(∗5)
SB
SB(∗4)
W–B(∗20)
A B C D E F G H I J K L M N

Multiplex Communication System

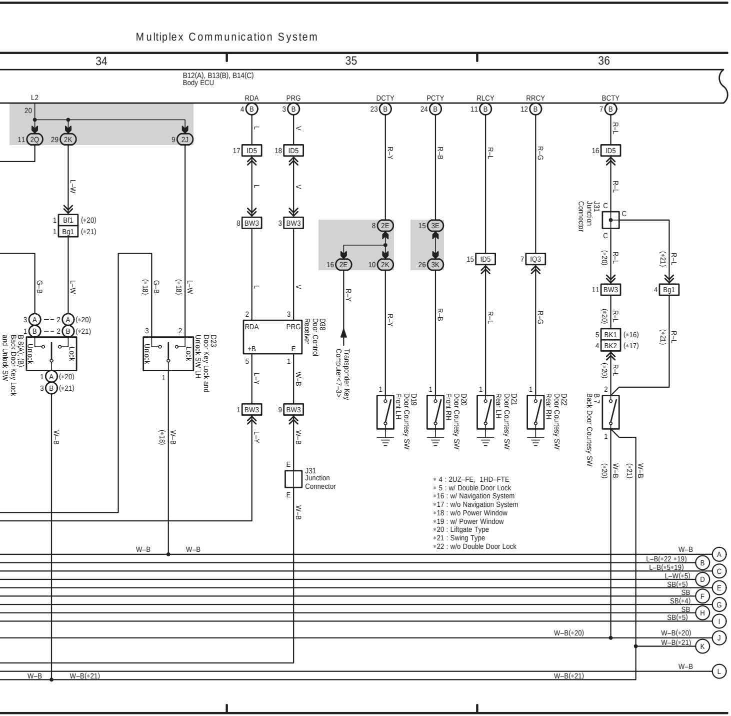
34
35
36
B12(A), B13(B), B14(C)
Body ECU
L2
RDA
PRG
DCTY
PCTY
RLCY
RRCY
BCTY
Bf1 (*20)
Bg1 (*21)
B 8(A), (B) Back Door Key Lock and Unlock SW
Unlock
Lock
D23 Door Key Lock and Unlock SW LH
D38 Door Control Receiver
+B
E
Transponder Key Computer<7–3>
J31 Junction Connector
J31 Junction Connector
D19 Door Courtesy SW Front LH
D20 Door Courtesy SW Front RH
D21 Door Courtesy SW Rear LH
D22 Door Courtesy SW Rear RH
B 7 Back Door Courtesy SW
BK1 (*16)
BK2 (*17)
ID5
BW3
IQ3
2Q
2K
2J
2E
3E
3K
A
B
C
D
E
F
G
H
I
J
K
L

∗ 4 : 2UZ–FE, 1HD–FTE
∗ 5 : w/ Double Door Lock
∗16 : w/ Navigation System
∗17 : w/o Navigation System
∗18 : w/o Power Window
∗19 : w/ Power Window
∗20 : Liftgate Type
∗21 : Swing Type
∗22 : w/o Double Door Lock

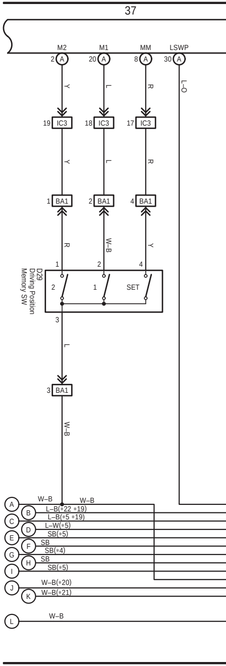
37
M2
M1
MM
LSWP
IC3
BA1
D29 Driving Position Memory SW
SET
A
B
C
D
E
F
G
H
I
J
K
L

(Cont. next page)

Multiplex Communication System

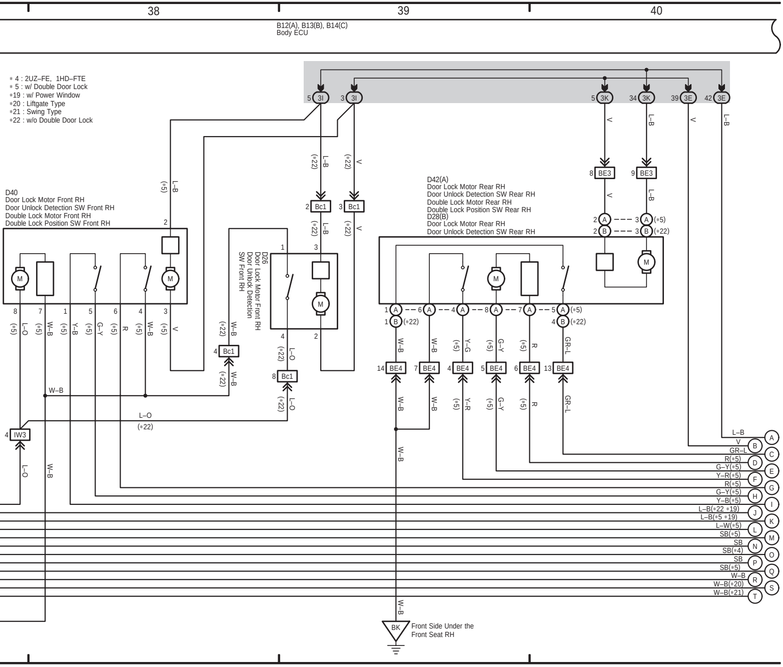

38
39
40
B12(A), B13(B), B14(C)
Body ECU
5 3I
3 3I
5 3K
34 3K
39 3E
42 3E
D40
Door Lock Motor Front RH
Door Unlock Detection SW Front RH
Double Lock Motor Front RH
Double Lock Position SW Front RH
D26
Door Lock Motor Front RH
Door Unlock Detection
SW Front RH
D42(A)
Door Lock Motor Rear RH
Door Unlock Detection SW Rear RH
Double Lock Motor Rear RH
Double Lock Position SW Rear RH
D28(B)
Door Lock Motor Rear RH
Door Unlock Detection SW Rear RH
2 Bc1
3 Bc1
4 Bc1
8 Bc1
8 BE3
9 BE3
14 BE4
7 BE4
4 BE4
5 BE4
6 BE4
13 BE4
4 IW3
L–B
V
W–B
L–O
Y–B
G–Y
R
Y–G
Y–R
GR–L
(*5)
(*22)
M
BK
Front Side Under the
Front Seat RH
L–B
V
GR–L
R(*5)
G–Y(*5)
Y–R(*5)
R(*5)
G–Y(*5)
Y–B(*5)
L–B(*22 *19)
L–B(*5 *19)
L–W(*5)
SB(*5)
SB
SB(*4)
SB
SB(*5)
W–B
W–B(*20)
W–B(*21)
A
B
C
D
E
F
G
H
I
J
K
L
M
N
O
P
Q
R
S
T

* 4 : 2UZ–FE, 1HD–FTE
* 5 : w/ Double Door Lock
*19 : w/ Power Window
*20 : Liftgate Type
*21 : Swing Type
*22 : w/o Double Door Lock

(Cont. next page)

∗ 4 : 2UZ–FE, 1HD–FTE
∗ 5 : w/ Double Door Lock
∗16 : w/ Navigation System
∗17 : w/o Navigation System
∗18 : w/o Power Window
∗19 : w/ Power Window
∗20 : Liftgate Type
∗21 : Swing Type
∗22 : w/o Double Door Lock

Multiplex Communication System

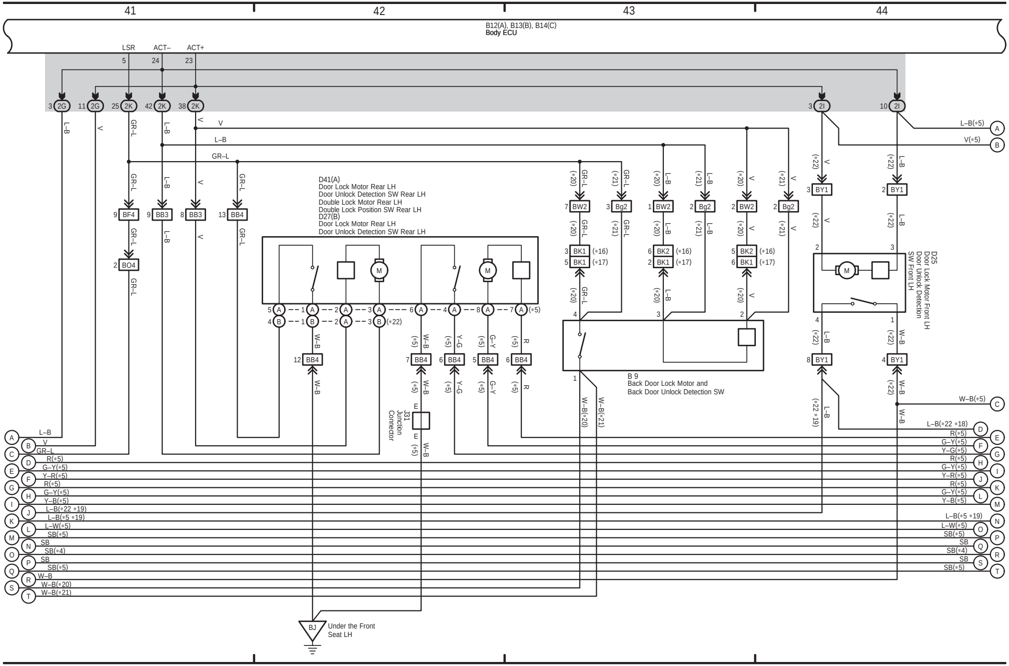
41
42
43
44
B12(A), B13(B), B14(C)
Body ECU
LSR
ACT–
ACT+
5
24
23
3 2G
11 2G
25 2K
42 2K
38 2K
3 2I
10 2I
L–B
V
GR–L
L–B(∗5)
V(∗5)
9 BF4
9 BB3
8 BB3
13 BB4
2 BO4
D41(A)
Door Lock Motor Rear LH
Door Unlock Detection SW Rear LH
Double Lock Motor Rear LH
Double Lock Position SW Rear LH
D27(B)
Door Lock Motor Rear LH
Door Unlock Detection SW Rear LH
M
12 BB4
7 BB4
6 BB4
5 BB4
6 BB4
W–B
Y–G
G–Y
R
(∗5)
(∗22)
E
J31
Junction
Connector
7 BW2
3 Bg2
1 BW2
2 Bg2
2 BW2
2 Bg2
(∗20)
(∗21)
3 BK1 (∗16)
5 BK1 (∗17)
6 BK2 (∗16)
2 BK1 (∗17)
5 BK2 (∗16)
6 BK1 (∗17)
B 9
Back Door Lock Motor and
Back Door Unlock Detection SW
W–B(∗20)
W–B(∗21)
3 BY1
2 BY1
8 BY1
4 BY1
D25
Door Lock Motor Front LH
Door Unlock Detection
SW Front LH
W–B(∗5)
L–B(∗22 ∗19)
R(∗5)
G–Y(∗5)
Y–G(∗5)
Y–R(∗5)
Y–B(∗5)
L–B(∗5 ∗19)
L–W(∗5)
SB(∗5)
SB
SB(∗4)
W–B
W–B(∗20)
W–B(∗21)
A
B
C
D
E
F
G
H
I
J
K
L
M
N
O
P
Q
R
S
T
BJ
Under the Front
Seat LH

∗ 4 : 2UZ–FE, 1HD–FTE
∗ 5 : w/ Double Door Lock
∗18 : w/o Power Window
∗19 : w/ Power Window
∗22 : w/o Double Door Lock

Multiplex Communication System

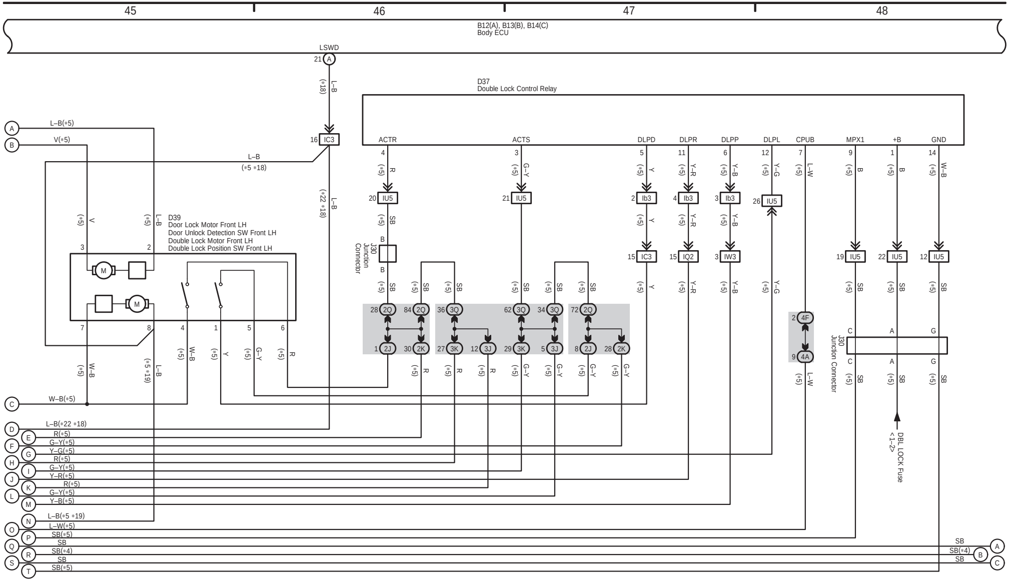
45
46
47
48
B12(A), B13(B), B14(C)
Body ECU
LSWD
21 A
L–B (∗18)
16 IC3
L–B (∗5 ∗18)
L–B (∗22 ∗18)
D37
Double Lock Control Relay
ACTR
ACTS
DLPD
DLPR
DLPP
DLPL
CPUB
MPX1
+B
GND
D39
Door Lock Motor Front LH
Door Unlock Detection SW Front LH
Double Lock Motor Front LH
Double Lock Position SW Front LH
M
J30
Junction Connector
20 IU5
21 IU5
2 Ib3
4 Ib3
3 Ib3
26 IU5
15 IC3
15 IQ2
3 IW3
19 IU5
22 IU5
12 IU5
28 2Q
84 2Q
36 3Q
62 3Q
34 3Q
72 2Q
1 2J
30 2K
27 3K
12 3J
29 3K
5 3J
8 2J
28 2K
2 4F
9 4A
DBL LOCK Fuse
<1–2>
A L–B(∗5)
B V(∗5)
C W–B(∗5)
D L–B(∗22 ∗18)
E R(∗5)
F G–Y(∗5)
G Y–G(∗5)
H R(∗5)
I G–Y(∗5)
J Y–R(∗5)
K R(∗5)
L G–Y(∗5)
M Y–B(∗5)
N L–B(∗5 ∗19)
O L–W(∗5)
P SB(∗5)
Q SB
R SB(∗4)
S SB
T SB(∗5)
SB A
SB(∗4) B
SB C

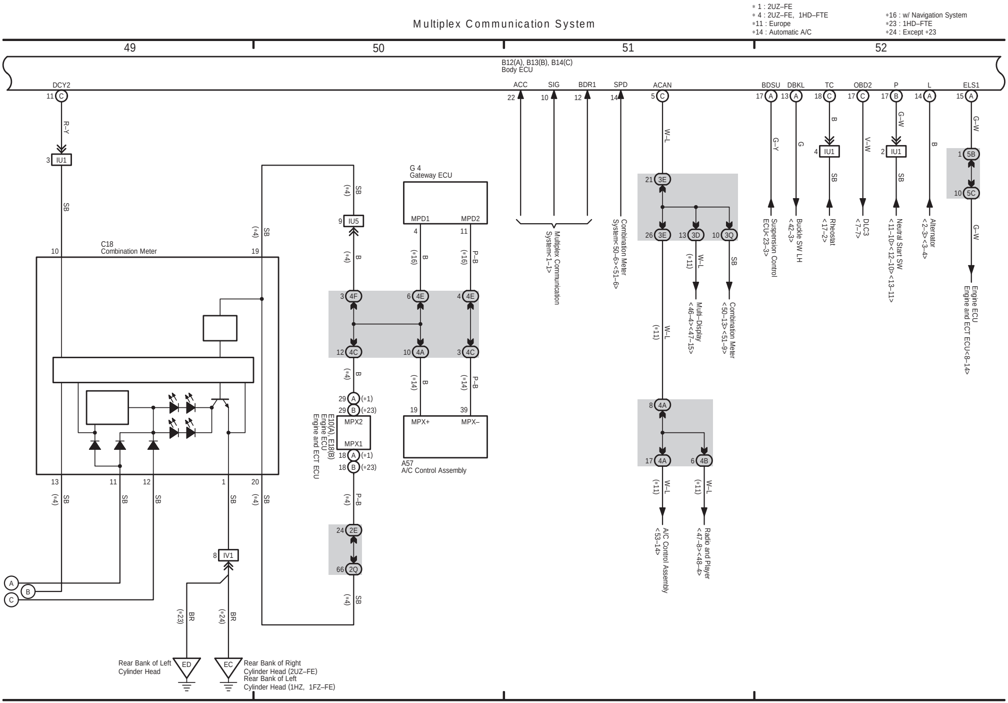
Multiplex Communication System
49
50
51
52
B12(A), B13(B), B14(C)
Body ECU
DCY2
ACC
SIG
BDR1
SPD
ACAN
BDSU
DBKL
TC
OBD2
P
L
ELS1
IU1
IU5
IV1
C18
Combination Meter
G 4
Gateway ECU
MPD1
MPD2
MPX+
MPX–
A57
A/C Control Assembly
E10(A), E18(B)
Engine ECU
Engine and ECT ECU
MPX2
MPX1
Multiplex Communication System<1–1>
Combination Meter System<50–6><51–6>
Multi–Display <46–4><47–15>
Combination Meter <50–13><51–9>
A/C Control Assembly <53–14>
Radio and Player <47–8><48–4>
Suspension Control ECU<23–3>
Buckle SW LH <42–3>
Rheostat <17–2>
DLC3 <7–7>
Neutral Start SW <11–10><12–10><13–11>
Alternator <2–3><3–4>
Engine ECU
Engine and ECT ECU<8–14>
Rear Bank of Left Cylinder Head
ED
EC
Rear Bank of Right Cylinder Head (2UZ–FE)
Rear Bank of Left Cylinder Head (1HZ, 1FZ–FE)
A
B
C

∗ 1 : 2UZ–FE
∗ 4 : 2UZ–FE, 1HD–FTE
∗11 : Europe
∗14 : Automatic A/C
∗16 : w/ Navigation System
∗23 : 1HD–FTE
∗24 : Except ∗23

1 LAND CRUISER (LHD) (Cont' d)

Multiplex Communication System

∗11 : Europe

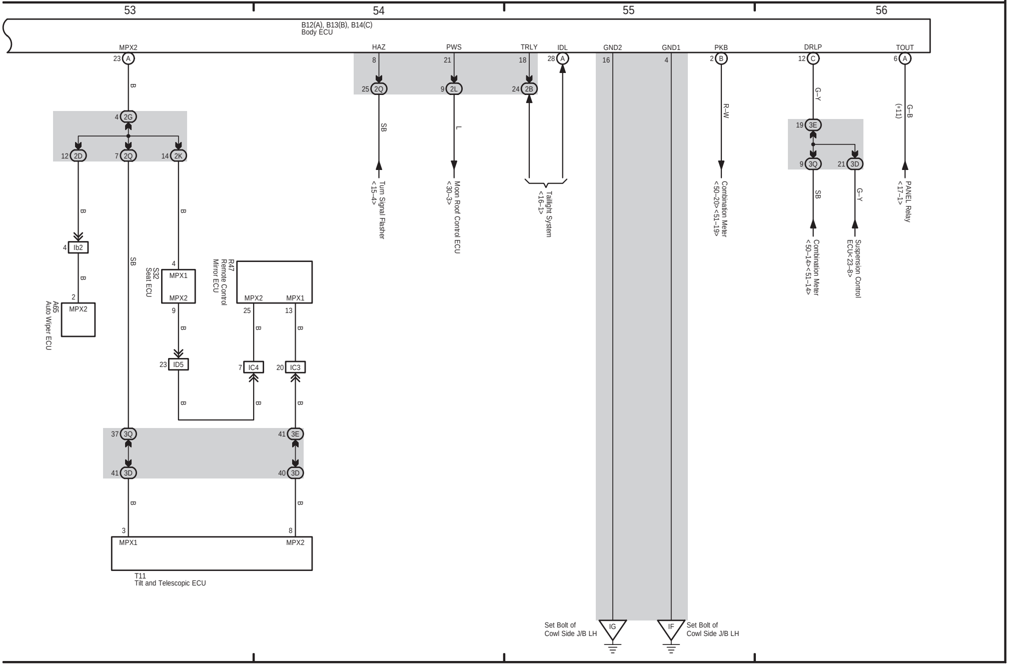
53
54
55
56
B12(A), B13(B), B14(C)
Body ECU
MPX2
HAZ
PWS
TRLY
IDL
GND2
GND1
PKB
DRLP
TOUT
23 A
8
21
18
28 A
16
4
2 B
12 C
6 A
B
25 2Q
9 2L
24 2B
SB
L
G–Y
R–W
G–B
(∗11)
4 2G
12 2D
7 2Q
14 2K
19 3E
9 3Q
21 3D
Turn Signal Flasher
< 15–4>
Moon Roof Control ECU
< 30–3>
Taillight System
< 16–1>
Combination Meter
< 50–20> < 51–19>
PANEL Relay
< 17–1>
Combination Meter
< 50–14> < 51–14>
Suspension Control
ECU< 23–8>
4 Ib2
2
MPX2
A65
Auto Wiper ECU
S32
Seat ECU
MPX1
MPX2
9
R47
Remote Control
Mirror ECU
MPX2
MPX1
25
13
23 ID5
7 IC4
20 IC3
37 3Q
41 3E
41 3D
40 3D
3
8
MPX1
MPX2
T11
Tilt and Telescopic ECU
Set Bolt of
Cowl Side J/B LH
IG
IF
Set Bolt of
Cowl Side J/B LH