55 LAND CRUISER (RHD) (Cont' d)

(Cont. next page)

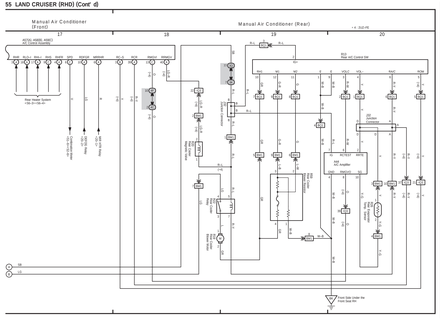
Manual Air Conditioner (Front)
Manual Air Conditioner (Rear)
Front Wiper Control
FWD-2F-FWD-3F
Rear Wiper Control
FWD-2R-FWD-3R
Rear Wiper Motor
Rear Wiper Motor Relay
Rear Wiper Motor Relay Control
Rear Wiper Motor Relay Power
Rear Wiper Motor Relay Ground
Rear Wiper Motor Relay Output
Rear Wiper Motor Relay Output Ground
Rear Wiper Motor Relay Output Power
Rear Wiper Motor Relay Output Control
Rear Wiper Motor Relay Output Control Ground
Rear Wiper Motor Relay Output Control Power
Rear Wiper Motor Relay Output Control Output
Rear Wiper Motor Relay Output Control Output Ground
Rear Wiper Motor Relay Output Control Output Power
Rear Wiper Motor Relay Output Control Output Control
Rear Wiper Motor Relay Output Control Output Control Ground
Rear Wiper Motor Relay Output Control Output Control Power
Rear Wiper Motor Relay Output Control Output Control Output
Rear Wiper Motor Relay Output Control Output Control Output Ground
Rear Wiper Motor Relay Output Control Output Control Output Power
Rear Wiper Motor Relay Output Control Output Control Output Control
Rear Wiper Motor Relay Output Control Output Control Output Control Ground
Rear Wiper Motor Relay Output Control Output Control Output Control Power
Rear Wiper Motor Relay Output Control Output Control Output Control Output
Rear Wiper Motor Relay Output Control Output Control Output Control Output Ground
Rear Wiper Motor Relay Output Control Output Control Output Control Output Power
Rear Wiper Motor Relay Output Control Output Control Output Control Output Control
Rear Wiper Motor Relay Output Control Output Control Output Control Output Control Ground
Rear Wiper Motor Relay Output Control Output Control Output Control Output Control Power
Rear Wiper Motor Relay Output Control Output Control Output Control Output Control Output
Rear Wiper Motor Relay Output Control Output Control Output Control Output Control Output Ground
Rear Wiper Motor Relay Output Control Output Control Output Control Output Control Output Power
Rear Wiper Motor Relay Output Control Output Control Output Control Output Control Output Control
Rear Wiper Motor Relay Output Control Output Control Output Control Output Control Output Control Ground
Rear Wiper Motor Relay Output Control Output Control Output Control Output Control Output Control Power
Rear Wiper Motor Relay Output Control Output Control Output Control Output Control Output Control Output
Rear Wiper Motor Relay Output Control Output Control Output Control Output Control Output Control Output Ground
Rear Wiper Motor Relay Output Control Output Control Output Control Output Control Output Control Output Power
Rear Wiper Motor Relay Output Control Output Control Output Control Output Control Output Control Output Control
Rear Wiper Motor Relay Output Control Output Control Output Control Output Control Output Control Output Control Ground
Rear Wiper Motor Relay Output Control Output Control Output Control Output Control Output Control Output Control Power
Rear Wiper Motor Relay Output Control Output Control Output Control Output Control Output Control Output Control Output
Rear Wiper Motor Relay Output Control Output Control Output Control Output Control Output Control Output Control Output Ground
Rear Wiper Motor Relay Output Control Output Control Output Control Output Control Output Control Output Control Output Power
Rear Wiper Motor Relay Output Control Output Control Output Control Output Control Output Control Output Control Output Control
Rear Wiper Motor Relay Output Control Output Control Output Control Output Control Output Control Output Control Output Control Ground
Rear Wiper Motor Relay Output Control Output Control Output Control Output Control Output Control Output Control Output Control Power
Rear Wiper Motor Relay Output Control Output Control Output Control Output Control Output Control Output Control Output Control Output
Rear Wiper Motor Relay Output Control Output Control Output Control Output Control Output Control Output Control Output Control Output Ground
Rear Wiper Motor Relay Output Control Output Control Output Control Output Control Output Control Output Control Output Control Output Power
Rear Wiper Motor Relay Output Control Output Control Output Control Output Control Output Control Output Control Output Control Output Control
Rear Wiper Motor Relay Output Control Output Control Output Control Output Control Output Control Output Control Output Control Output Control Ground
Rear Wiper Motor Relay Output Control Output Control Output Control Output Control Output Control Output Control Output Control Output Control Power
Rear Wiper Motor Relay Output Control Output Control Output Control Output Control Output Control Output Control Output Control Output Control Output
Rear Wiper Motor Relay Output Control Output Control Output Control Output Control Output Control Output Control Output Control Output Control Output Ground
Rear Wiper Motor Relay Output Control Output Control Output Control Output Control Output Control Output Control Output Control Output Control Output Power
Rear Wiper Motor Relay Output Control Output Control Output Control Output Control Output Control Output Control Output Control Output Control Output Control
Rear Wiper Motor Relay Output Control Output Control Output Control Output Control Output Control Output Control Output Control Output Control Output Control Ground
Rear Wiper Motor Relay Output Control Output Control Output Control Output Control Output Control Output Control Output Control Output Control Output Control Power
Rear Wiper Motor Relay Output Control Output Control Output Control Output Control Output Control Output Control Output Control Output Control Output Control Output
Rear Wiper Motor Relay Output Control Output Control Output Control Output Control Output Control Output Control Output Control Output Control Output Control Ground
Rear Wiper Motor Relay Output Control Output Control Output Control Output Control Output Control Output Control Output Control Output Control Output Control Power
Rear Wiper Motor Relay Output Control Output Control Output Control Output Control Output Control Output Control Output Control Output Control Output Control Output Control
Rear Wiper Motor Relay Output Control Output Control Output Control Output Control Output Control Output Control Output Control Output Control Output Control Output Control Ground
Rear Wiper Motor Relay Output Control Output Control Output Control Output Control Output Control Output Control Output Control Output Control Output Control Output Control Power
Rear Wiper Motor Relay Output Control Output Control Output Control Output Control Output Control Output Control Output Control Output Control Output Control Output Control Output
Rear Wiper Motor Relay Output Control Output Control Output Control Output Control Output Control Output Control Output Control Output Control Output Control Output Control Ground
Rear Wiper Motor Relay Output Control Output Control Output Control Output Control Output Control Output Control Output Control Output Control Output Control Output Control Power
Rear Wiper Motor Relay Output Control Output Control Output Control Output Control Output Control Output Control Output Control Output Control Output Control Output Control Output Control
Rear Wiper Motor Relay Output Control Output Control Output Control Output Control Output Control Output Control Output Control Output Control Output Control Output Control Output Control Ground
Rear Wiper Motor Relay Output Control Output Control Output Control Output Control Output Control Output Control Output Control Output Control Output Control Output Control Output Control Power
Rear Wiper Motor Relay Output Control Output Control Output Control Output Control Output Control Output Control Output Control Output Control Output Control Output Control Output Control Output