HEADLIGHT AND TAILLIGHT SYSTEM

BE0H8–11
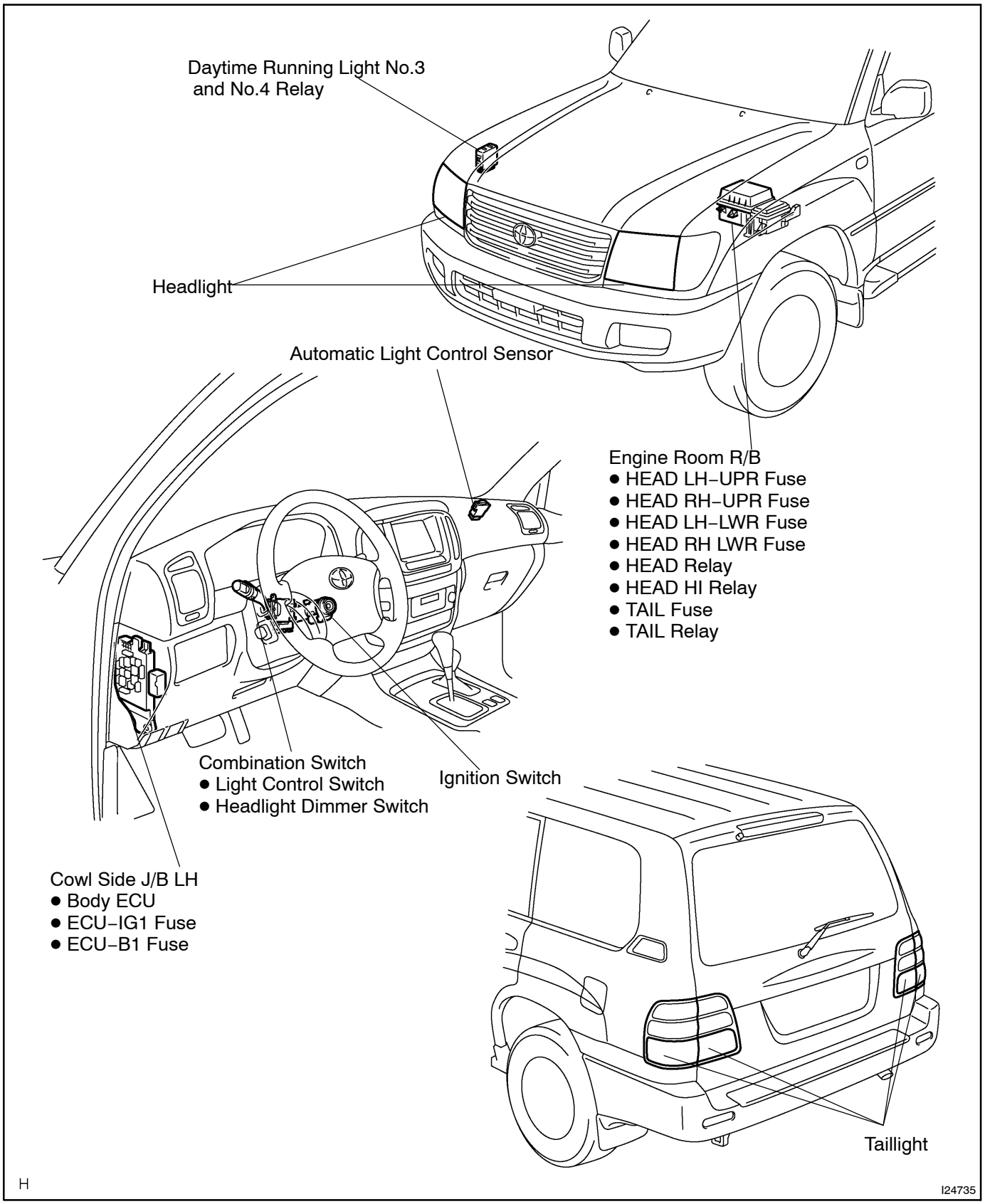
LOCATION