EXHAUST SYSTEM

COMPONENTS
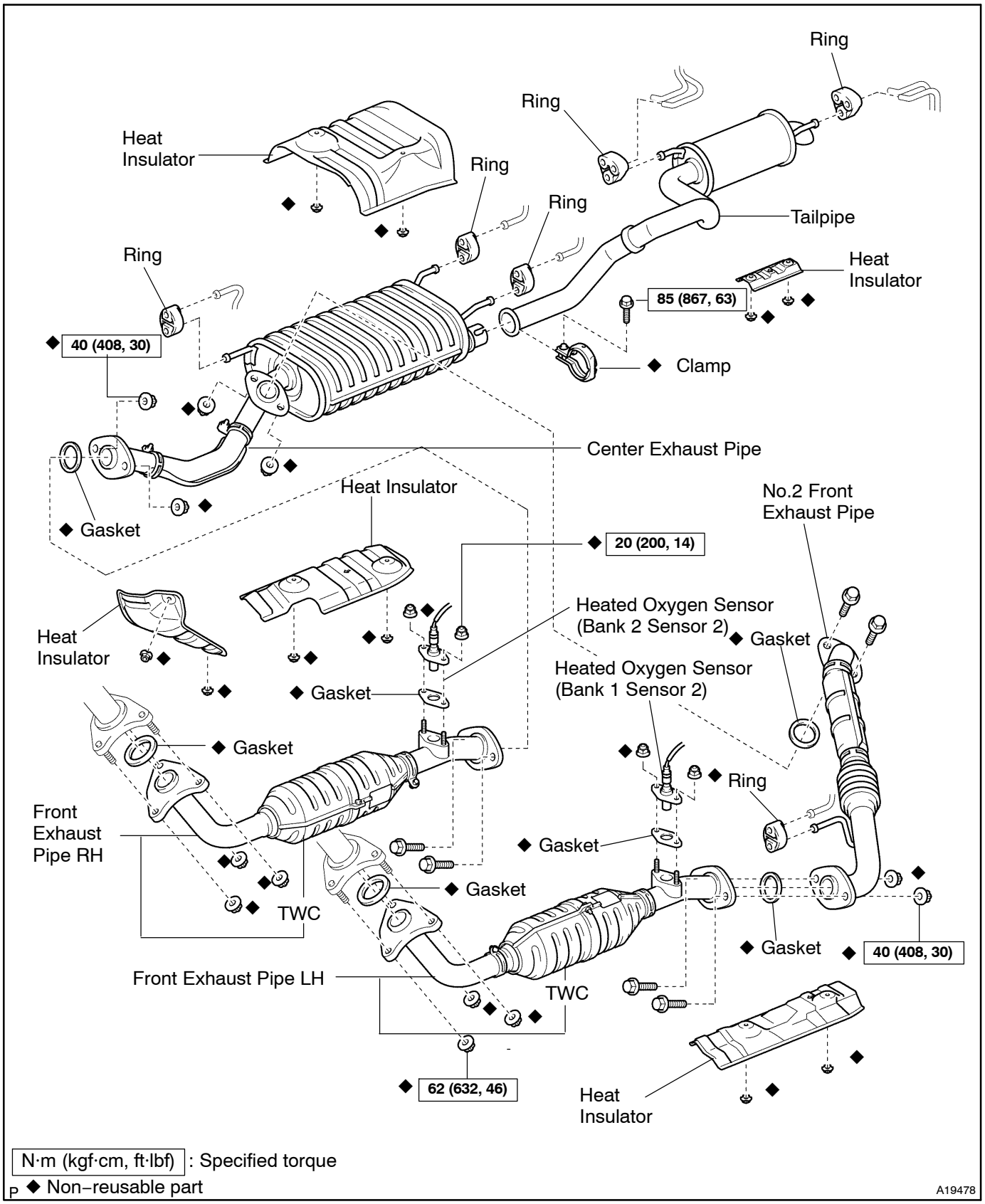
EM0EE−18