TOYOTA LAND CRUISER BODY BUILDER'S GUIDE

FJ75
BJ75 Series
HJ75

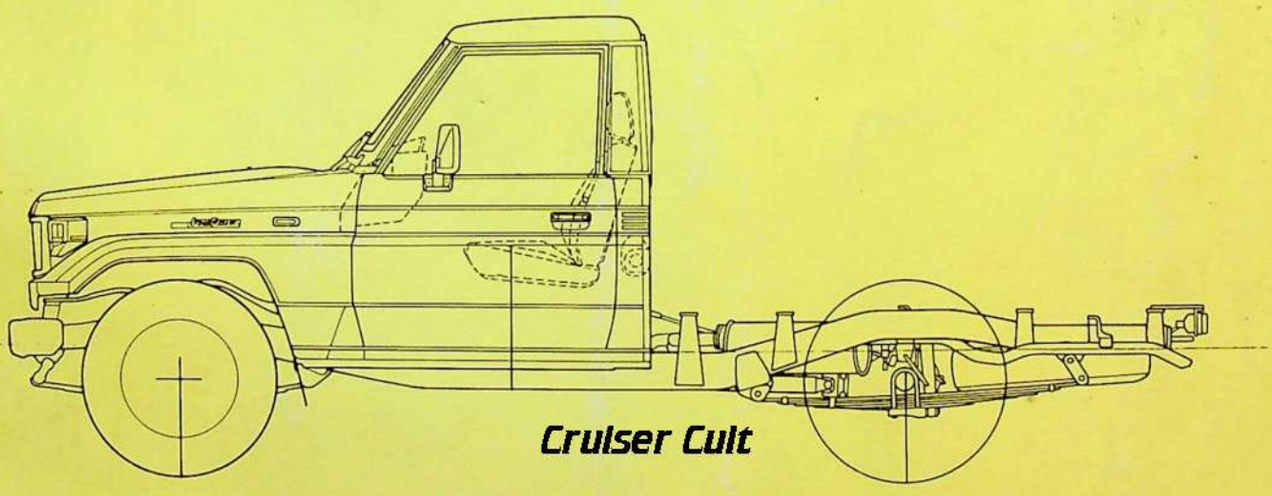

TOYOTA MOTOR CORPORATION

Publication No. BBG001E

TOYOTA LAND CRUISER BODY BUILDER'S GUIDE

FJ75
BJ75 Series
HJ75

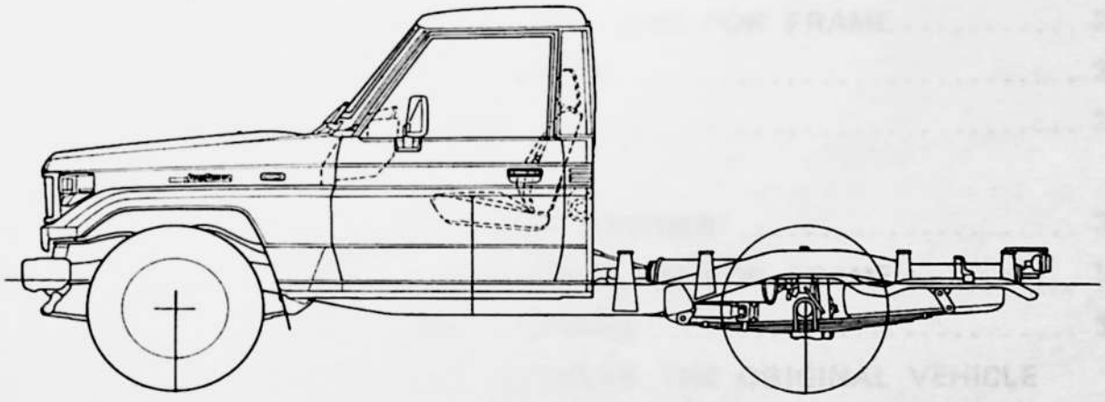

TOYOTA MOTOR CORPORATION

2. This book has been designed as a source of basic information for the many body and equipment manufactures who mount their product on Toyota Land Cruiser.
3. Individual chassis layout, drawing, component dimensional charts and wiring diagram have been prepared to provide detailed information.
4. The specifications, equipment and design contained in this booklet are effective at the time of the publication and TOYOTA MOTOR CORPORATION reserves the right to change them without prior notice.

TABLE OF CONTENTS

SECTION 5

INTRODUCTION

1. BEFORE MOUNTING SPECIAL EQUIPMENT OR CONVERTING VEHICLES

a. Since the standard vehicle is a well-balanced unit from the view point of legal compliance, performance and safety, do not damage its function by special equipment mounting and vehicle conversion.

b. Study special equipment mounting and conversion as well as related modification of standard parts and make sure that the completed vehicle is safe and functional from a technical point of view.

c. Design and produce mounting equipment and conversion parts to be lightweight as well as to provide adequate legal compliance, performance and safety.

d. Design and produce mounting equipment to apply the weight equally to the right and left wheels.

e. Install mounting equipment and conversion parts to provide easy check and service of the chassis parts.

f. Prevent mounting equipment and conversion parts from obstructing the front field of view.

2. WHEN MOUNTING AND CONVERTING

a. Avoid damage of chassis parts and function.

b. Place all wheels on the same level without torsion of the chassis frame and avoid load concentration on the frame.

c. Do not carry out component modification (by welding, padding, processing, heating and so on) concerning important safety parts (front axle, steering assembly, brake assembly and so on).

3. AFTER MOUNTING AND CONVERTING

a. Confirm that mounting equipment and conversion parts are produced according to the design for providing adequate performance and function and also that there is no problem.

b. In case that any alteration is caused on manipulation and maintenance service of the standard vehicle as a result of mounting or converting, prepare an instruction manual and place it in the completed vehicle.

c. Concerning operating procedures, maintenance service and maintenance period of mounting equipment, prepare separate instruction manual and maintenance service guide and place them in the complated vehicle.

d. It is also requested to provide sufficient after-sales service for the parts related to special equipment mounting or conversion.

SECTION 1

1. MODEL & MODEL CODE

1-1 Meaning of Model Code

FJ75RP—MRQ3

① ②③ ④⑤⑥⑦

① Engine Type & Wheelbase		
FJ75 : 3F E/G Long Wheelbase	BJ75 : 3B E/G Long Wheelbase	HJ75 : 2H E/G Long Wheelbase
② Handle Position	③ Body Type	④ Transmission
R : Right Hand Drive L : Left Hand Drive	V : Hard Top P : Pickup	K : 4-speed Manual Floor M : 5-speed Manual Floor
⑤ Grade	⑥ Destination	⑦ Package Model
R : STD	Blank : General, V : G.C.C Countries Q : Australia W : Europe	Blank : Complete Model 3 : Cab & Chassis Model

1-2 Model Code

Distination	Model Name	Model Code	Engine	Transmission
General	TOYOTA LAND CRUISER, Hard Top, (Long Wheelbase)	FJ75$^{R}_{L}$V-KR	3F	4M/T
	TOYOTA LAND CRUISER, Hard Top, (Long Wheelbase)	FJ75LV-MR	3F	5M/T
	TOYOTA LAND CRUISER, Hard Top, (Long Wheelbase)	BJ75$^{R}_{L}$V-KR	3B	4M/T
	TOYOTA LAND CRUISER, Hard Top, (Long Wheelbase)	HJ75$^{R}_{L}$V-KR	2H	4M/T
	TOYOTA LAND CRUISER, Pickup, (Long Wheelbase)	FJ75$^{R}_{L}$P-KR	3F	4M/T
	TOYOTA LAND CRUISER, Pickup, (Long Wheelbase)	FJ75LP-MR	3F	5M/T
	TOYOTA LAND CRUISER, Pickup, (Long Wheelbase)	BJ75$^{R}_{L}$P-KR	3B	4M/T
	TOYOTA LAND CRUISER, Pickup, (Long Wheelbase)	HJ75$^{R}_{L}$P-KR	2H	4M/T
	TOYOTA LAND CRUISER, Pickup, (Long Wheelbase)	HJ75LP-MR	2H	5M/T
	TOYOTA LAND CRUISER, Pickup, Cab & Chassis, (Long Wheelbase)	FJ75$^{R}_{L}$P-KR3	3F	4M/T
	TOYOTA LAND CRUISER, Pickup, Cab & Chassis, (Long Wheelbase)	FJ75$^{R}_{L}$P-MR3	3F	5M/T
	TOYOTA LAND CRUISER, Pickup, Cab & Chassis, (Long Wheelbase)	HJ75RP-KR3	2H	4M/T
	TOYOTA LAND CRUISER, Pickup, Cab & Chassis, (Long Wheelbase)	BJ75RP-KR3	3B	4M/T
	TOYOTA LAND CRUISER, Pickup, Cab & Chassis, (Long Wheelbase)	BJ75RP-MR3	3B	5M/T
G.C.C. Countries	TOYOTA LAND CRUISER, Hard Top, (Long Wheelbase)	FJ75LV-MRV	3F	5M/T
	TOYOTA LAND CRUISER, Hard Top, (Long Wheelbase)	FJ75LP-MRV	3F	5M/T
Australia	TOYOTA LAND CRUISER, Hard Top, (Long Wheelbase)	FJ75RV-MRQ	3F	5M/T
	TOYOTA LAND CRUISER, Hard Top, (Long Wheelbase)	HJ75RV-MRQ	2H	5M/T
	TOYOTA LAND CRUISER, Pickup, (Long Wheelbase)	HJ75RP-MRQ	2H	5M/T
	TOYOTA LAND CRUISER, Pickup, Cab & Chassis, (Long Wheelbase)	FJ75RP-MRQ3	3F	5M/T
	TOYOTA LAND CRUISER, Pickup, Cab & Chassis, (Long Wheelbase)	HJ75RP-MRQ3	2H	5M/T
Europe	TOYOTA LAND CRUISER, Hard Top, (Long Wheelbase)	BJ75LV-MRW	3B	5M/T
	TOYOTA LAND CRUISER, Pickup, (Long Wheelbase)	BJ75LP-MRW	3B	5M/T
South Africa	TOYOTA LAND CRUISER, Pickup, (Long Wheelbase)	FJ75RP-MRN	3F	5M/T
	TOYOTA LAND CRUISER, Pickup, (Long Wheelbase)	HJ75RP-MRN	3F	5M/T

The Engine bound for South Africa models is locally equipped.

2. MAJOR TECHNICAL SPECIFICATIONS

2-1. Dimensions & Weight

(1) Hard Top [GENERAL]

*1 ... w/Winch
*2 ... w/Winch & Sub Fuel Tank
*3 ... w/Dual Air Conditioner
*4 ... w/Sub Fuel Tank (HJ, FJ only)

Item				Model	BJ75$^{R}_{L}$V-KR	HJ75$^{R}_{L}$V-KR	FJ75$^{R}_{L}$V-KR
Dimensions	Overall Length			mm	4,995 *1 5,255 *2 5,340	4,995 *1 5,255 *2 5,340	4,995 *1 5,255 *2 5,340
	Overall Width			mm	1,690	1,690	1,690
	Overall Height			mm	2,075	2,075	2,080
	Wheelbase			mm	2,980	2,980	2,980
	Tread	Front		mm	1,415	1,415	1,415
		Rear		mm	1,410	1,410	1,410 Semi float
					1,400	1,400	1,400 Full float
	Cab End to Rear Axle			mm	–	–	–
Weight	Chassis Weight with Cab	Front		kg	–	–	–
		Rear		kg	–	–	–
		Total		kg	–	–	–
	G. V. W.	Front		kg	1,200	1,200	1,200
		Rear		kg	1,835	1,835	1,835
		Total		kg	3,035	3,035	3,035
Seating Capacity				persons	3/10 OPT 3/3, 3/0, 2/10 2/3, 2/0, *3 3/9, *3 2/9	←	←
Fuel Tank Capacity				ℓ	90 *4 90 + 90	90 *4 90 + 90	90 *4 90 + 90

Item				Model	FJ75LV-MR		
Dimensions	Overall Length			mm	4,995 *1 5,255 *2 5,340		
	Overall Width			mm	1,690		
	Overall Height			mm	2,080		
	Wheelbase			mm	2,980		
	Tread	Front		mm	1,415		
		Rear		mm	1,410 Semi float		
					1,400 Full float		
	Cab End to Rear Axle			mm	–		
Weight	Chassis Weight with Cab	Front		kg	–		
		Rear		kg	–		
		Total		kg	–		
	G. V. W.	Front		kg	1,200		
		Rear		kg	1,835		
		Total		kg	3,035		
Seating				persons	3/10 OPT 3/3, 3/0, 2/10 2/3, 2/0, *3 3/9, *3 2/9		
Fuel Tank Capacity				ℓ	90 *4 90 + 90		

Hard Top [Middle East, Australia, Europe]

*1 ... w/Winch
*2 ... w/Winch + Sub Fuel Tank
*3 ... w/Dual Air Conditioner
*4 ... w/Sub Fuel Tank

Item				Model	FJ75LV-MRV	HJ75RV-MRQ	FJ75RV-MRQ
Dimensions	Overall Length			mm	4,995 *1 5,255 *2 5,340	4,995 *4 5,080	4,995 *4 5,080
	Overall Width			mm	1,690	1,690	1,690
	Overall Height			mm	2,065	2,070	2,070
	Wheelbase			mm	2,980	2,980	2,980
	Tread	Front		mm	1,415	1,415	1,415
		Rear		mm	Semi float 1,410	1,400	1,400
					Full float 1,400		
	Cab End to Rear Axle			mm	–	–	–
Weight	Chassis Weight with Cab	Front		kg	–	–	–
		Rear		kg	–	–	–
		Total		kg	–	–	–
	G. V. W.	Front		kg	1,200	1,200	1,200
		Rear		kg	1,835	1,835	1,835
		Total		kg	3,035	3,035	3,035
Seating Capacity				persons	3/10 OPT *3 3/9	3/8 OPT 3/3, 3/0, *3 3/9	←
Fuel Tank Capacity				ℓ	90 *4 90 + 90	90 *4 90 + 90	90 *4 90 + 90

Item				Model	BJ75LV-MRW		
Dimensions	Overall Length			mm	4,995 *1 5,255		
	Overall Width			mm	1,690		
	Overall Height			mm	2,075		
	Wheelbase			mm	2,980		
	Tread	Front		mm	1,415		
		Rear		mm	Semi float 1,410		
					Full float 1,400		
	Cab End to Rear Axle			mm	–		
Weight	Chassis Weight with Cab	Front		kg	–		
		Rear		kg	–		
		Total		kg	–		
	G. V. W.	Front		kg	1,200		
		Rear		kg	1,835		
		Total		kg	3,035		
Seating				persons	2/8 OPT 2/3, 2/0		
Fuel Tank Capacity				ℓ	90		

(2) Pickup [General]

*1 ... w/Winch
*4 ... w/Sub Fuel Tank
*5 ... w/Winch & Rear Bumper
*6 ... w/Heavy Duty Suspension

Item			Model	BJ75$^{R}_{L}$P-KR	HJ75$^{R}_{L}$P-KR	HJ75LP-MR
Dimensions	Overall Length		mm	4,885 *1 5,145 *5 5,280	4,885 *1 5,145 *5 5,280	←
	Overall Width		mm	1,690	1,690	←
	Overall Height		mm	1,935 *6 1,940	1,930 *6 1,935	←
	Wheelbase		mm	2,980	2,980	←
	Tread	Front	mm	1,415	1,415	←
		Rear	mm	Semi float 1,410	1,410	←
				Full float 1,400	1,400	←
	Cab End to Rear Axle		mm	1,055	1,055	←
Weight	Chassis Weight with Cab	Front	mm	–	–	←
		Rear	kg	–	–	←
		Total	kg	–	–	←
	G. V. W.	Front	kg	1,200	1,200	←
		Rear	kg	1,835	1,835	←
		Total	kg	3,035	3,035	←
Seating Capacity			persons	3/0 OPT 3/10, 3/9	←	←
Fuel Tank Capacity			ℓ	90 *4 90 + 90	90 *4 90 + 90	←

Item			Model	FJ75$^{R}_{L}$P-KR	FJ75LP-MR	
Dimensions	Overall Length		mm	4,885 *1 5,145 *5 5,280	←	
	Overall Width		mm	1,690	←	
	Overall Height		mm	1,935 *6 1,940	←	
	Wheelbase		mm	2,980	←	
	Tread	Front	mm	1,415	←	
		Rear	mm	Semi float 1,410	←	
				Full float 1,400	←	
	Cab End to Rear Axle		mm	1,055	←	
Weight	Chassis Weight with Cab	Front	kg	–	←	
		Rear	kg	–	←	
		Total	kg	–	←	
	G. V. W.	Front	kg	1,200	←	
		Rear	kg	1,835	←	
		Total	kg	3,035	←	
Seating			persons	3/0 OPT 3/10, 3/9	←	
Fuel Tank Capacity			ℓ	90 *4 90 + 90	←	

*1 ... w/Winch
*4 ... w/Sub Fuel Tank
*6 ... w/Heavy Duty Suspension
*7 ... w/Rear Bumper
*8 ... w/Tarpaulin

Pickup [Middle East, Australia, Europe & South Africa]

Item				Model	FJ75LP-MRV	HJ75RP-MRQ	BJ75LP-MRW
Dimensions	Overall Length			mm	5,145 *7 5,280	4,885 *7 5,020	4,885 *1 5,145
	Overall Width			mm	1,690	1,690	1,690
	Overall Height			mm	1,920 *6 1,935 *8 2,185 *8 2,190	1,940 *6 1,945	1,930
	Wheelbase			mm	2,980	2,980	2,980
	Tread	Front		mm	1,415	1,415	1,415
		Rear		mm	Semi float 1,410	1,400	1,410
					Full float 1,400		1,400
	Cab End to Rear Axle			mm	1,055	1,055	1,055
Weight	Chassis Weight with Cab	Front		kg	–	–	–
		Rear		kg	–	–	–
		Total		kg	–	–	–
	G. V. W.	Front		kg	1,200	1,200	1,200
		Rear		kg	1,850	1,835	1,835
		Total		kg	3,050	3,035	3,035
Seating Capacity				persons	3/0 OPT 3/10, 3/9	3/0	3/0
Fuel Tank Capacity				ℓ	90 *4 90 + 90	90 *4 90 + 90	90

Item				Model	FJ75RP-MRN	HJ75RP-MPN	
Dimensions	Overall Length			mm	4,885	4,885	
	Overall Width			mm	1,690	1,690	
	Overall Height			mm	1,920	1,915	
	Wheelbase			mm	2,980	2,980	
	Tread	Front		mm	1,415	1,415	
		Rear		mm	1,410	1,410	
					1,400	1,400	
	Cab End to Rear Axle			mm	1,055	1,055	
Weight	Chassis Weight with Cab	Front		kg	–	–	
		Rear		kg	–	–	
		Total		kg	–	–	
	G. V. W.	Front		kg	1,200	1,200	
		Rear		kg	1,835	1,835	
		Total		kg	3,035	3,035	
Seating				persons	3/0	3/0	
Fuel Tank Capacity				ℓ	90	90	

(3) Cab & Chassis [General]

* ... Full OPT
*1 ... w/Winch
*4 ... w/Sub Fuel Tank
*6 ... w/Heavy Duty Suspension

Item				Model	BJ75RP-KR3	BJ75RP-MR3	HJ75RP-KR3
Dimensions	Overall Length			mm	4,875 *1 5,135	←	4,875 *1 5,135
	Overall Width			mm	1,690	←	1,690
	Overall Height			mm	1,940 *6 1,945	←	1,935 *6 1,940
	Wheelbase			mm	2,980	←	2,980
	Tread	Front		mm	1,415	←	1,415
		Rear		mm	Semi float 1,410	←	1,410
					Full float 1,400	←	1,400
	Cab End to Rear Axle			mm	1,055	←	1,055
Weight	Chassis Weight with Cab	Front		kg	1,075 *1,235	1,080 *1,240	1,115 *1,260
		Rear		kg	650 *815	650 *815	660 *870
		Total		kg	1725 *2,050	1,730 *2,055	1,775 *2,130
	G. V. W.	Front		kg	1,200	←	1,200
		Rear		kg	1,835	←	1,835
		Total		kg	3,035	←	3,035
Seating Capacity				persons	3/0	3/0	3/0
Fuel Tank Capacity				ℓ	90 *4 90 + 90	←	90 *4 90 + 90

Item				Model	FJ75$^{R}_{L}$P-KR3	FJ75$^{R}_{L}$P-MR3	
Dimensions	Overall Length			mm	4,875 *1 5,135	←	
	Overall Width			mm	1,690	←	
	Overall Height			mm	1,940 *6 1,945	←	
	Wheelbase			mm	2,980	←	
	Tread	Front		mm	1,415	←	
		Rear		mm	Semi float 1,410	←	
					Full float 1,400	←	
	Cab End to Rear Axle			mm	1,055	←	
Weight	Chassis Weight with Cab	Front		kg	1,030 *1,200	1,035 *1,205	
		Rear		kg	650 *840	650 *840	
		Total		kg	1,680 *2,040	1,685 *2,045	
	G. V. W.	Front		kg	1,200	←	
		Rear		kg	1,835	←	
		Total		kg	3,035	←	
Seating				persons	3/0	3/0	
Fuel Tank Capacity				ℓ	90 *4 90 + 90	←	

Cab & Chassis [Australia]

* ... Full OPT
*4 ... w/Sub Fuel Tank
*6 ... w/Heavy Duty Suspension

Item				Model	HJ75RP-MRQ3	FJ75RP-MRQ3	
Dimensions	Overall Length			mm	4,875	4,875	
	Overall Width			mm	1,690	1,690	
	Overall Height			mm	1.945 *6 1,950	1,940	
	Wheelbase			mm	2,980	2,980	
	Tread	Front		mm	1,415	1,415	
		Rear		mm	1,400	1,400	
	Cab End to Rear Axle			mm	1,055	1,055	
Weight	Chassis Weight with Cab	Front		kg	1,100 *1,120	1,015 *1,075	
		Rear		kg	685 *870	675 *855	
		Total		kg	1,785 *1,990	1,690 *1,930	
	G. V. W.	Front		kg	1,200	1,200	
		Rear		kg	1,835	1,835	
		Total		kg	3,035	3,035	
Seating Capacity				persons	3/0	3/0	
Fuel Tank Capacity				ℓ	90 *4 90 + 90	90 *4 90 + 90	

3. SPECIFICATIONS OF MAIN COMPONENTS

3-1 Engine, Clutch and Transmission

[Engine]

Engine Model		3B (Diesel)	2H (Diesel)	3F (Gasoline)
Type		In-line, 4-cyl., O. H. V.	In-line, 6-cyl., O. H. V.	In-line, 6-cyl., O. H. V.
Bore x Stroke mm		102.0 x 105.0	91.0 x 102.0	94.0 x 95.0
Piston Displacement cc		3,431	3,980	3,955
Max. Horse Power (kw/rpm)	SAE NET	69/3,500	79/3,500	101/4,200
	SAE GROSS	71/3,500	–	116/4,200
	DIN	66/3,500	76/3,500	103/4,200
Max. Torque (N-m/rpm)	SAE NET	221/2,100	246/1,800	275/2,200
	SAE GROSS	224/2,100	–	294/2,200
	DIN	216/2,100	241/1,800	284/2,200
Battery V–A	General	12–70	12–70	12–50
	Middle East	–	–	12–50
	Australia	12–70	12–70	12–60
	Europe	24–60 + 60	–	–
Alternator output V–A	General	12–40	12–40	12–45
	Middle East	–	–	12–45
	Australia	12–50	12–50	12–65
	Europe	24–25	–	–
Starter output V–kw	General	12–2.5	12–2.5	12–1.0
	Middle East	–	–	12–1.0
	Australia	12–2.5	12–2.5	12–1.0
	Europe	24–4.5	–	–

[Clutch]

Item \ Engine		3B	2H	3F
Type		AISIN, Single Dry Plate	AISIN, Single Dry Plate	AISIN, Single Dry Plate
Type of Pressures Plate Springs		Diaphragm	Diaphragm	Diaphragm
Clutch Disc Size	Outside & Inside Dia. mm	260 x 170	275 x 175	275 x 175
	Total Eff. Area cm^2	304	353	353

[Transmission]

Model		BJ75 Series		HJ75 Series		FJ75 Series	
Type		4-Speed T/M Floor	5-Speed T/M Floor	4-Speed T/M Floor	5-Speed T/M Floor	4-Speed T/M Floor	5-Speed T/M Floor
Model		H41	H55F	H41	H55F	H41	H55F
Transmission Gear Ratio	1st	4,843	4,843	4,843	4,843	4,843	4,843
	2nd	2,618	2,618	2,618	2,618	2,618	2,618
	3rd	1,516	1,516	1,516	1,516	1,516	1,516
	4th	1,000	1,000	1,000	1,000	1,000	1,000
	5th	–	0,845	–	0,845	–	0,845
	Reverse	4,843	4,843	4,843	4,843	4,843	4,843

3-2 Performance

Model Type	Destination	Model	Engine Type	T/M Type	Max. Speed km/h	Max. Grade-ability tanθ	Min. Turning Radius m	
							2WD	4WD
Hard Top	General	BJ75$^{R}_{L}$V-KR	3B	4M/T	125	Ⓗ0.33 Ⓛ0.82	6.5	6.9
		HJ75$^{R}_{L}$V-KR	2H	4M/T	125	Ⓗ0.38 Ⓛ1.00	6.5	6.9
		FJ75$^{R}_{L}$V-KR	3F	4M/T	155	Ⓗ0.39 Ⓛ1.00 or more	6.5	6.9
		FJ75LV-MR	3F	5M/T	155	Ⓗ0.39 Ⓛ1.00 or more	6.5	6.9
	Middle East	FJ75LV-MRV	3F	5M/T	155	Ⓗ0.45 Ⓛ1.00 or more	6.5	6.9
	Australia	HJ75RV-MRQ	2H	5M/T	125	Ⓗ0.37 Ⓛ0.96	6.5	6.9
		FJ75RV-MRQ	3F	5M/T	155	Ⓗ0.45 Ⓛ1.00 or more	6.5	6.9
	Europe	BJ75LV-MRW	3B	5M/T	125	Ⓗ0.32 Ⓛ0.79	6.5	6.9
Pickup	General	BJ75$^{R}_{L}$P-KR	3B	4M/T	125	Ⓗ0.33 Ⓛ0.82	6.5	6.9
		HJ75$^{R}_{L}$P-KR	2H	4M/T	125	Ⓗ0.38 Ⓛ1.00	6.5	6.9
		HJ75LP-MR	2H	5M/T	125	Ⓗ0.38 Ⓛ1.00	6.5	6.9
		FJ75$^{R}_{L}$P-KR	3F	4M/T	155	Ⓗ0.39 Ⓛ1.00 or more	6.5	6.9
		FJ75LP-MR	3F	5M/T	155	Ⓗ0.39 Ⓛ1.00 or more	6.5	6.9
	Middle East	FJ75LP-MRV	3F	5M/T	155	Ⓗ0.45 Ⓛ1.00 or more	6.5	6.9
	Australia	HJ75RP-MRQ	2H	5M/T	125	Ⓗ0.37 Ⓛ0.96	6.5	6.9
	Europe	BJ75LP-MRW	3B	5M/T	125	Ⓗ0.32 Ⓛ0.79	6.5	6.9
	South Africa	HJ75RP-MRN	2H	5M/T		Ⓗ0.38 Ⓛ1.00	6.5	6.9
		FJ75RP-MRN	3F	5M/T	155	Ⓗ0.39 Ⓛ1.00 or more	6.5	6.9
Cab & Chassis	General	BJ75RP-KR3	3B	4M/T	125	Ⓗ0.33 Ⓛ0.82	6.5	6.9
		BJ75RP-MR3	3B	5M/T	125	Ⓗ0.33 Ⓛ0.82	6.5	6.9
		HJ75RP-KR3	2H	4M/T	125	Ⓗ0.38 Ⓛ1.00	6.5	6.9
		FJ75$^{R}_{L}$P-KR3	3F	4M/T	155	Ⓗ0.39 Ⓛ1.00 or more	6.5	6.9
		FJ75$^{R}_{L}$P-MR3	3F	5M/T	155	Ⓗ0.39 Ⓛ1.00 or more	6.5	6.9
	Australia	HJ75RP-MRQ3	2H	5M/T	125	Ⓗ0.37 Ⓛ0.96	6.5	6.9
		FJ75RP-MRQ3	3F	5M/T	155	Ⓗ0.45 Ⓛ1.00 or more	6.5	6.9

3-3 Chassis

Model Type	Destination	Model	Engine Type	T/M Type	Propeller Shaft Size	Differential			Front Spring		Remarks
					Length x Outer. Dia. x Inner Dia. mm	Size	Axle Ratio: STD	Axle Raito: OPT	Size: Length x Width x Thickness-Leaves mm	Spring Rate N/mm	
Hard Top	General	BJ75$^{R}_{L}$V-KR	3B	4M/T	Ⓕ 558.5 x 65 x 61.8 Ⓡ 1,270 x 68.9 x 64.3	241.3	4.111	–	1.142 x 70 x $^{6\text{-}1}_{7\text{-}4}$	56.4	
		HJ75$^{R}_{L}$V-KR	2H	4M/T	Ⓕ 558.5 x 65 x 61.8 Ⓡ 1,270 x 68.9 x 64.3	241.3	4.111	–	1,142 x 70 x $^{6\text{-}1}_{7\text{-}4}$	56.4	
		FJ75$^{R}_{L}$V-KR	3F	4M/T	Ⓕ 558.5 x 65 x 61.8 Ⓡ 1,270 x 68.9 x 64.3	241.3	3.700	4.111	1,142 x 70 x $^{6\text{-}1}_{7\text{-}4}$	56.4	
		FJ75LV-MR	3F	5M/T	Ⓕ 558.5 x 65 x 61.8 Ⓡ 1,270 x 68.9 x 64.3	241.3	3.700	4.111	1,142 x 70 x $^{6\text{-}1}_{7\text{-}4}$	56.4	
	Middle East	FJ75LV-MRV	3F	5M/T	Ⓕ 558.5 x 65 x 61.8 Ⓡ 1,270 x 68.9 x 64.3	241.3	4.111	–	1,142 x 70 x $^{6\text{-}1}_{7\text{-}4}$	56.4	
	Australia	HJ75RV-MRQ	2H	5M/T	Ⓕ 558.5 x 65 x 61.8 Ⓡ 1,270 x 68.9 x 64.3	241.3	4.111	–	1,142 x 70 x $^{6\text{-}1}_{7\text{-}4}$	56.4	
		FJ75RV-MRQ	3F	5M/T	Ⓕ 558.5 x 65 x 61.8 Ⓡ 1,270 x 68.9 x 64.3	241.3	4.111	–	1,142 x 70 x $^{6\text{-}1}_{7\text{-}4}$	56.4	
	Europe	BJ75LV-MRW	3B	5/MT	Ⓕ 558.5 x 65 x 61.8 Ⓡ 1,270 x 68.9 x 64.3	241.3	4.111	–	1,142 x 70 x $^{6\text{-}1}_{7\text{-}4}$	56.4	
Pickup	General	BJ75$^{R}_{L}$P-KR	3B	4M/T	Ⓕ 558.5 x 65 x 61.8 Ⓡ 1,270 x 68.9 x 64.3	241.3	4.111	–	1,142 x 70 x $^{6\text{-}1}_{7\text{-}4}$	56.4	
		HJ75$^{R}_{L}$P-KR	2H	4M/T	Ⓕ 558.5 x 65 x 61.8 Ⓡ 1,270 x 68.9 x 64.3	241.3	4.111	–	1,142 x 70 x $^{6\text{-}1}_{7\text{-}4}$	56.4	
		HJ75LP-MR	2H	5M/T	Ⓕ 558.5 x 65 x 61.8 Ⓡ 1,270 x 68.9 x 64.3	241.3	4.111	–	1,142 x 70 x $^{6\text{-}1}_{7\text{-}4}$	56.4	
		FJ75$^{R}_{L}$P-KR	3F	4M/T	Ⓕ 558.5 x 65 x 61.8 Ⓡ 1,270 x 68.9 x 64.3	241.3	3.700	4.111	1,142 x 70 x $^{6\text{-}1}_{7\text{-}4}$	56.4	
		FJ75LP-MR	3F	5M/T	Ⓕ 558.5 x 65 x 61.8 Ⓡ 1,270 x 68.9 x 64.3	241.3	3.700	4.111	1,142 x 70 x $^{6\text{-}1}_{7\text{-}4}$	56.4	
	Middle East	FJ75LP-MRV	3F	5M/T	Ⓕ 558.5 x 65 x 61.8 Ⓡ 1,270 x 68.9 x 64.3	241.3	4.111	–	1,142 x 70 x $^{6\text{-}1}_{7\text{-}4}$	56.4	
	Australia	HJ75RP-MRQ	2H	5M/T	Ⓕ 558.5 x 65 x 61.8 Ⓡ 1,270 x 68.9 x 64.3	241.3	4.111	–	1,142 x 70 x $^{6\text{-}2}_{7\text{-}4}$	58.8	
	Europe	BJ75LP-MRW	3B	5M/T	Ⓕ 558.5 x 65 x 61.8 Ⓡ 1,270 x 68.9 x 64.3	241.3	4.111	–	1,142 x 70 x $^{6\text{-}1}_{7\text{-}4}$	56.4	
	South Africa	HJ75RP-MRN	2H	5M/T	Ⓕ 558.5 x 65 x 61.8 Ⓡ 1,270 x 68.9 x 64.3	241.3	3.700	–	1,142 x 70 x $^{6\text{-}1}_{7\text{-}4}$	56.4	
		FJ75RP-MRN	3F	5M/T	Ⓕ 558.5 x 65 x 61.8 Ⓡ 1,270 x 68.9 x 64.3	241.3	3.700	–	1,147 x 70 x $^{6\text{-}1}_{7\text{-}4}$	56.4	
Cab & Chassis	General	BJ75RP-KR3	3B	4M/T	Ⓕ 558.5 x 65 x 61.8 Ⓡ 1,270 x 68.9 x 64.3	241.3	4.111	–	1,142 x 70 x $^{6\text{-}1}_{7\text{-}4}$	56.4	
		BJ75RP-MR3	3B	5M/T	Ⓕ 558.5 x 65 x 61.8 Ⓡ 1,270 x 68.9 x 64.3	241.3	4.111	–	1,142 x 70 x $^{6\text{-}1}_{7\text{-}4}$	56.4	
		HJ75RP-KR3	2H	4M/T	Ⓕ 558.5 x 65 x 61.8 Ⓡ 1,270 x 68.9 x 64.3	241.3	4.111	–	1,142 x 70 x $^{6\text{-}1}_{7\text{-}4}$	56.4	
		FJ75$^{R}_{L}$P-KR3	3F	4M/T	Ⓕ 558.5 x 65 x 61.8 Ⓡ 1,270 x 68.9 x 64.3	241.3	3.700	4.111	1,142 x 70 x $^{6\text{-}1}_{7\text{-}4}$	56.4	
		FJ75$^{R}_{L}$P-MR3	3F	5M/T	Ⓕ 558.5 x 65 x 61.8 Ⓡ 1,270 x 68.9 x 64.3	241.3	3.700	4.111	1,142 x 70 x $^{6\text{-}1}_{7\text{-}4}$	56.4	
	Australia	HJ75RP-MRQ3	2H	5M/T	Ⓕ 558.5 x 65 x 61.8 Ⓡ 1,270 x 68.9 x 64.3	241.3	4.111	–	1,142 x 70 x $^{6\text{-}1}_{7\text{-}4}$	56.4	
		FJ75RP-MRQ3	3F	5M/T	Ⓕ Fr 558.5 x 65 x 61.8 Ⓡ 1,270 x 68.9 x 64.3	241.3	4.111	–	1,142 x 70 x $^{6\text{-}1}_{7\text{-}4}$	56.4	

Model Type	Destination	Model	Engine Type	T/M Type	Rear Spring Size: Length x Width x Thickness-Leaves mm	Rear Spring Spring Rate N/mm	Shock absorber dumping force at 0.3 m/sec. kg Front Rebound	Front Bound	Rear Rebound	Rear Bound	Remarks
Hard Top	General	BJ75$^{R}_{L}$V-KR	3B	4M/T	1,326 x 70 x $\begin{smallmatrix}7-2\\8-2\\13-2\end{smallmatrix}$	46.6 ~ 112.7	196	54	200	80	
		HJ75$^{R}_{L}$V-KR	2H	4M/T	1,326 x 70 x $\begin{smallmatrix}7-2\\8-2\\13-2\end{smallmatrix}$	46.6 ~ 112.7	196	54	200	80	
		FJ75$^{R}_{L}$V-KR	3F	4M/T	1,326 x 70 x $\begin{smallmatrix}7-2\\8-2\\13-2\end{smallmatrix}$	46.6 ~ 112.7	196	54	200	80	
		FJ75LV-MR	3F	5M/T	1,326 x 70 x $\begin{smallmatrix}7-2\\8-2\\13-2\end{smallmatrix}$	46.6 ~ 112.7	196	54	200	80	
	Middle East	FJ75LV-MRV	3F	5M/T	1,326 x 70 x $\begin{smallmatrix}7-2\\8-2\\13-2\end{smallmatrix}$	46.6 ~ 112.7	196	54	200	80	
	Australia	HJ75RV-MRQ	2H	5M/T	1,326 x 70 x $\begin{smallmatrix}7-2\\8-2\\13-2\end{smallmatrix}$	46.6 ~ 112.7	196	54	200	80	
		FJ75RV-MRQ	3F	5M/T	1,326 x 70 x $\begin{smallmatrix}7-2\\8-2\\13-2\end{smallmatrix}$	46.6 ~ 112.7	196	54	200	80	
	Europe	BJ75LV-MRW	3B	5M/T	1,326 x 70 x $\begin{smallmatrix}7-2\\8-2\\13-2\end{smallmatrix}$	46.6 ~ 112.7	150	42	200	80	
Pickup	General	BJ75$^{R}_{L}$P-KR	3B	4M/T	1,326 x 70 x $\begin{smallmatrix}7-2\\8-2\\13-2\end{smallmatrix}$ OPT: 1,236 x 70 x $\begin{smallmatrix}7-6\\13-3\end{smallmatrix}$	46 6 ~ 112.7 OPT: 57.1 ~176.4	196	54	200	80	
		HJ75$^{R}_{L}$P-KR	2H	4M/T	1,326 x 70 x $\begin{smallmatrix}7-2\\8-2\\13-2\end{smallmatrix}$ OPT: 1,236 x 70 x $\begin{smallmatrix}7-6\\13-3\end{smallmatrix}$	46.6 ~ 112.7 OPT: 57.1 ~ 176.4	196	54	200	80	
		HJ75LP-MR	2H	5M/T	1,326 x 70 x $\begin{smallmatrix}7-2\\8-2\\13-2\end{smallmatrix}$ OPT: 1,236 x 70 x $\begin{smallmatrix}7-6\\13-3\end{smallmatrix}$	46.6 ~ 112.7 OPT: 57.1 ~ 176.4	196	54	200	80	
		FJ75$^{R}_{L}$P-KR	3F	4M/T	1,326 x 70 x $\begin{smallmatrix}7-2\\8-2\\13-2\end{smallmatrix}$ OPT: 1,236 x 70 x $\begin{smallmatrix}7-6\\13-3\end{smallmatrix}$	46.6 ~ 112.7 OPT: 57.1 ~ 176 4	196	54	200	80	
		FJ75LP-MR	3F	5M/T	1,326 x 70 x $\begin{smallmatrix}7-2\\8-2\\13-2\end{smallmatrix}$ OPT: 1,236 x 70 x $\begin{smallmatrix}7-6\\13-3\end{smallmatrix}$	46 6 ~ 112.7 OPT: 57.1 ~ 176 4	196	54	200	80	
	Middle East	FJ75LP-MRV	3F	5M/T	1,326 x 70 x $\begin{smallmatrix}7-2\\8-2\\13-2\end{smallmatrix}$ OPT: 1,236 x 70 x $\begin{smallmatrix}7-6\\13-3\end{smallmatrix}$	46.6 ~ 112.7 OPT: 57.1 ~ 176.4	196	54	200	80	
	Australia	HJ75RP-MRQ	2H	5M/T	1,326 x 70 x $\begin{smallmatrix}7-5\\14-2\end{smallmatrix}$	46.6 ~ 112.7	196	54	200	80	
	Europe	BJ75LP-MRW	3B	5M/T	1,326 x 70 x $\begin{smallmatrix}7-2\\8-2\\13-2\end{smallmatrix}$	46.6 ~ 112.7	150	42	200	80	
	South Africa	HJ75RP-MRN	2H	5M/T	1,326 x 70 x $\begin{smallmatrix}7-2\\8-2\\13-2\end{smallmatrix}$	46.6 ~ 112.7	196	54	200	80	
		FJ75RP-MRN	3F	5M/T	1,326 x 70 x $\begin{smallmatrix}7-2\\8-2\\13-2\end{smallmatrix}$	46.6 ~ 112.7	196	54	200	80	
Cab & Chassis	General	BJ75RP-KR3	3B	4M/T	1,326 x 70 x $\begin{smallmatrix}7-2\\8-2\\13-2\end{smallmatrix}$ OPT: 1,236 x 70 x $\begin{smallmatrix}7-6\\13-3\end{smallmatrix}$	46.6 ~ 112.7 OPT: 57.1 ~ 176.4	196	54	200	80	
		BJ75RP-MR3	3B	5M/T	1,326 x 70 x $\begin{smallmatrix}7-2\\8-2\\13-2\end{smallmatrix}$ OPT: 1,236 x 70 x $\begin{smallmatrix}7-6\\13-3\end{smallmatrix}$	46.6 ~ 112.7 OPT. 57.1 ~ 176.4	196	54	200	80	
		HJ75RP-KR3	2H	4M/T	1,326 x 70 x $\begin{smallmatrix}7-2\\8-2\\13-2\end{smallmatrix}$ OPT: 1,236 x 70 x $\begin{smallmatrix}7-6\\13-3\end{smallmatrix}$	46.6 ~ 112.7 OPT: 57.1 ~ 176.4	196	54	200	80	
		FJ75$^{R}_{L}$P-KR3	3F	4M/T	1,326 x 70 x $\begin{smallmatrix}7-2\\8-2\\13-2\end{smallmatrix}$ OPT: 1,236 x 70 x $\begin{smallmatrix}7-6\\13-3\end{smallmatrix}$	46.6 ~ 112.7 OPT: 57.1 ~ 176.4	196	54	200	80	
		FJ75$^{R}_{L}$P-MR3	3F	5M/T	1,326 x 70 x $\begin{smallmatrix}7-2\\8-2\\13-2\end{smallmatrix}$ OPT: 1,236 x 70 x $\begin{smallmatrix}7-6\\13-3\end{smallmatrix}$	46.4 ~ 112.7 OPT: 57.1 ~ 176.4	196	54	200	80	
	Australia	HJ75RP-MRQ3	2H	5M/T	1,326 x 70 x $\begin{smallmatrix}7-2\\8-2\\13-2\end{smallmatrix}$	46.6 ~ 112.7	196	54	200	80	
		FJ75RP-MRQ3	3F	5M/T	1,326 x 70 x $\begin{smallmatrix}7-2\\8-2\\13-2\end{smallmatrix}$	46.6 ~ 112.7	196	54	200	80	

Model Type	Destination	Model	Engine Type	T/M Type	Brake Booster	Brake Master Cylinder		Front Brake		Rear Brake		Wheel Cylinder		Parking Brake	Remarks
						Type	Innse Dia. mm	Type	Drum Dia. mm	Type	Drum Dia. mm	Front Dia. mm	Rear Dia. mm	Drum Dia. mm	
Hard Top	General	BJ75$^{R}_{L}$V-KR	3B	4M/T	Vacuum Booster	Tandem	26.99 OPT: 22.22	Drum OPT: Disc	295.0 OPT: 302.0	Drum	295	28.50 OPT:42.85+33.96	28.57 OPT: 25.40	295	
		HJ75$^{R}_{L}$V-KR	2H	4M/T	Vacuum Booster	Tandem	26 99 OPT: 22.22	Drum OPT: Disc	295.0 OPT: 302.0	Drum	295	28.50 OPT 42.85+33 96	28.57 OPT: 25.40	295	
		FJ75$^{R}_{L}$V-KR	3F	4M/T	Vacuum Booster	Tandem	26.99 OPT: 22.22	Drum OPT: Disc	295.0 OPT: 302.0	Drum	295	28.50 OPT:42 85+33 96	28 57 OPT: 25.40	295	
		FJ75LV-MR	3F	5M/T	Vacuum Booster	Tandem	26.99 OPT: 22.22	Drum OPT: Disc	295.0 OPT: 302.0	Drum	295	28.50 OPT 42 85+33.96	28.57 OPT: 25.40	295	
	Middle East	FJ75LV-MRV	3F	5M/T	Vacuum Booster	Tandem	22.22	Disc	302.0	Drum	295	42.85 + 33.96	25.40	295	
	Australia	HJ75RV-MRQ	2H	5M/T	Vacuum Booster	Tandem	22.22	Disc	302.0	Drum	295	42.85 + 33.96	25.40	295	
		FJ75RV-MRQ	3F	5M/T	Vacuum Booster	Tandem	22.22	Disc	302.0	Drum	295	42.85 + 33.96	25.40	295	
	Europe	BJ75LV-MRW	3B	5M/T	Vacuum Booster	Tandem	22 22	Disc	302.0	Drum	295	42.85 + 33.96	25.40	295	
Pickup	General	BJ75$^{R}_{L}$P-KR	3B	4M/T	Vacuum Booster	Tandem	26.99 OPT: 22.22	Drum OPT: Disc	295.0 OPT: 302.0	Drum	295	28.50 OPT:42.85+33.96	28.57 OPT: 25.40	295	
		HJ75$^{R}_{L}$P-KR	2H	4M/T	Vacuum Booster	Tandem	26.99 OPT: 22.22	Drum OPT: Disc	295.0 OPT. 302.0	Drum	295	28.50 OPT 42.85+33.96	28.57 OPT: 25.40	295	
		HJ75LP-MR	2H	5M/T	Vacuum Booster	Tandem	26.99 OPT: 22.22	Drum OPT: Disc	295.0 OPT: 302.0	Drum	295	28.50 OPT:42 85+33.96	28.57 OPT: 25.40	295	
		FJ75$^{R}_{L}$P-KR	3F	4M/T	Vacuum Booster	Tandem	26 99 OPT: 22.22	Drum OPT: Disc	295.0 OPT: 302.0	Drum	295	28.50 OPT:42 85+33 96	28.57 OPT: 25.40	295	
		FJ75LP-MR	3F	5M/T	Vacuum Booster	Tandem	26.99 OPT: 22.22	Drum OPT: Disc	295.0 OPT: 302.0	Drum	295	28.50 OPT.42 85+33.96	28.57 OPT: 25.40	295	
	Middle East	FJ75LP-MRV	3F	5M/T	Vacuum Booster	Tandem	22.22	Disc	302.0	Drum	295	42.85 + 33.96	25.40	295	
	Australia	HJ75RP-MRQ	2H	5M/T	Vacuum Booster	Tandem	22.22	Disc	302.0	Drum	295	42.85 + 33.96	25.40	295	
	Europe	BJ75LP-MRW	3B	5M/T	Vacuum Booster	Tandem	22.22	Disc	302.0	Drum	295	42.85 + 33.96	25.40	295	
	South Africa	HJ75RP-MRN	2H	5M/T	Vacuum Booster	Tandem	22.22	Disc	302.0	Drum	295	42.85 + 33.96	25.40	295	
		FJ75RP-MRN	3F	5M/T	Vacuum Booster	Tandem	22.22	Disc	302.0	Drum	295	42.85 + 33.96	25.40	295	
Cab & Chassis	General	BJ75RP-KR3	3B	4M/T	Vacuum Booster	Tandem	26.99 OPT: 22.22	Drum OPT: Disc	295.0 OPT: 302.0	Drum	295	28.50 OPT:42.85+33.96	28.57 OPT: 25.40	295	
		BJ75RP-MR3	3B	5M/T	Vacuum Booster	Tandem	26.99 OPT: 22.22	Drum OPT: Disc	295.0 OPT: 302.0	Drum	295	28.50 OPT:42 85+33 96	28.57 OPT: 25.40	295	
		HJ75RP-KR3	2H	4M/T	Vacuum Booster	Tandem	26.99 OPT: 22.22	Drum OPT: Disc	295.0 OPT: 302.0	Drum	295	28.50 OPT:42.85+33.96	28.57 OPT: 25.40	295	
		FJ75$^{R}_{L}$P-KR3	3F	4M/T	Vacuum Booster	Tandem	26.99 OPT: 22.22	Drum OPT: Disc	295.0 OPT: 302.0	Drum	295	28.50 OPT:42.85+33.96	28.57 OPT: 25.40	295	
		FJ75$^{R}_{L}$P-MR3	3F	5M/T	Vacuum Booster	Tandem	26.99 OPT: 22.22	Drum OPT: Disc	295.0 OPT: 302.0	Drum	295	28.50 OPT:42.85+33.96	28.57 OPT: 25.40	295	
	Australia	HJ75RP-MRQ3	2H	5M/T	Vacuum Booster	Tandem	22.22	Disc	302.0	Drum	295	42.85 + 33.96	25.40	295	
		FJ75RP-MRQ3	3F	5M/T	Vacuum Booster	Tandem	22.22	Disc	302.0	Drum	295	42.85 + 33.96	25.40	295	

Model Type	Destination	Model	Engine Type	T/M Type	Tire					
					STD	OPT	OPT	OPT	OPT	OPT
Hard Top	General	BJ75$^{R}_{L}$V-KR	3B	4M/T	7.50–16–8	Ⓕ 7.50–16–6 & Ⓡ 7.50–16–8	7.50R–16–8	7.00–16–8	–	–
		HJ75$^{R}_{L}$V-KR	2H	4M/T	7.50–16–8	Ⓕ 7.50–16–6 & Ⓡ 7.50–16–8	7.50R–16–8	7.00–16–8	–	–
		FJ75$^{R}_{L}$V-KR	3F	4M/T	7.50–16–8	Ⓕ 7.50–16–6 & Ⓡ 7.50–16–8	7.50R–16–8	7.00–16–8	–	–
		FJ75LV-MR	3F	5M/T	7.50–16–8	Ⓕ 7.50–16–6 & Ⓡ 7.50–16–8	7.50R–16–8	7.00–16–8	–	–
	Middle East	FJ75LV-MRV	3F	5M/T	7.50–16–8	7.50R–16–8	–	–	–	–
	Australia	HJ75RV-MRQ	2H	5M/T	7.50–16–8	7.50R–16–8	–	–	–	–
		FJ75RV-MRQ	3F	5M/T	7.50–16–8	7.50R–16–8	–	–	–	–
	Europe	BJ75LV-MRW	3B	5M/T	7.50–16–8	205R16C–8	–	–	–	–
Pickup	General	BJ75$^{R}_{L}$P-KR	3B	4M/T	7.50–16–8	Ⓕ 7.50–16–6 & Ⓡ 7.50–16–8	7.50R–16–8	9.00–16–6	9.00–15–6	7.00–16–8
		HJ75$^{R}_{L}$P-KR	2H	4M/T	7.50–16–8	Ⓕ 7.50–16–6 & Ⓡ 7.50–16–8	7.50R–16–8	9.00–16–6	9.00–15–6	7.00–16–8
		HJ75LP-MR	2H	5M/T	7.50–16–8	Ⓕ 7.50–16–6 & Ⓡ 7.50–16–8	7.50R–16–8	9.00–16–6	9.00–15–6	7.00–16–8
		FJ75$^{R}_{L}$P-KR	3F	4M/T	7.50–16–8	Ⓕ 7.50–16–6 & Ⓡ 7.50–16–8	7.50R–16–8	9.00–16–6	9.00–15–6	7.00–16–8
		FJ75LP-MR	3F	5M/T	7.50–16–8	Ⓕ 7.50–16–6 & Ⓡ 7.50–16–8	7.50R–16–8	9.00–16–6	9.00–15–6	7.00–16–8
	Middle East	FJ75LP-MRV	3F	5M/T	7.50–16–8	9.00–15–6	7.50R–16–8	9.00–16–6	–	–
	Australia	HJ75RP-MRQ	2H	5M/T	7.50–16–8	7.50R–16–8	–	–	–	–
	Europe	BJ75LP-MRW	3B	5M/T	7.50–16–8	205R16C–8	–	–	–	–
	South Africa	HJ75RP-MRN	2H	5M/T	7.00–16–8	–	–	–	–	–
		FJ75RP-MRN	3F	5M/T	7.00–16–8	–	–	–	–	–
Cab & Chassis	General	BJ75RP-KR3	3B	4M/T	7.50–16–8	Ⓕ 7.50–16–6 & Ⓡ 7.50–16–8	7.50R–16–8	9.00–16–6	9.00–15–6	7.00–16–8
		BJ75RP-MR3	3B	5M/T	7.50–16–8	Ⓕ 7.50–16–6 & Ⓡ 7.50–16–8	7.50R–16–8	9.00–16–6	9.00–15–6	7.00–16–8
		HJ75RP-KR3	2H	4M/T	7.50–16–8	Ⓕ 7.50–16–6 & Ⓡ 7.50–16–8	7.50R–16–8	9.00–16–6	9.00–15–6	7.00–16–8
		FJ75$^{R}_{L}$P-KR3	3F	4M/T	7.50–16–8	Ⓕ 7.50–16–6 & Ⓡ 7.50–16–8	7.50R–16–8	9.00–16–6	9.00–15–6	7.00–16–8
		FJ75$^{R}_{L}$P-MR3	3F	5M/T	7.50–16–8	Ⓕ 7.50–16–6 & Ⓡ 7.50–16–8	7.50R–16–8	9.00–16–6	9.00–15–6	7.00–16–8
	Australia	HJ75RP-MRQ3	2H	5M/T	7.50–16–8	7.50R–16–8	–	–	–	–
		FJ75RP-MRQ3	3F	5M/T	7.50–16–8	7.50R–16–8	–	–	–	–

SECTION 2

1. GENERAL INFORMATION

1. Engine Type and Main Structure

Alteration of engine is confined to the same type of engine mounted on standard vehicle. Besides, do not alter the main parts (carburetor and others) that play an important role in engine function. Do not alter the parts for shielding.

2. Power Train

Do not alter the main parts of Power Train.

3. Cooling Fan

Do not alter the standard parts cooling fan.
Any remodeling that causes alteration of wind noise and alteration of the number of revolutions as a result of alteration of fan materials and alteration of a diameter of pulley are strictly prohibited.

4. Intake System

Do not alter structure and capacity of air cleaner.
Any alteration of the shape of air inlet is also prohibited.

5. Exhaust System

Do not alter structure and capacity of muffler.

2. CLEARANCE BETWEEN MOUNTING EQUIPMENT AND CHASSIS-RELATED PARTS

1. Since thermal influence and contact of exhaust pipe and muffler are important items from a safety point of view, secure adequate clearance between such parts as exhaust system and mounting equipment, and confirm that there is no trouble relating to safety factors by measuring temperature, if necessary.

   Note: Judging from the requirements of noise regulation, large conversion of exhaust system is impossible.

   a. Electrical Equipment and Body Electrical Parts

      - Electrical parts
      - Wire harness and others.

      Note: Avoid such a location as directly exposed to exhaust gas from the exhaust pipe.

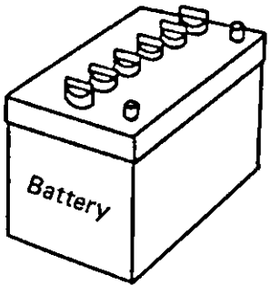

   b. Fuel-Related Parts

      - Fuel hose
      - Fuel pipe
      - Fuel tank
      - Evaporative emission-related parts

      Note: Avoid such a location as directly exposed to exhaust gas from the exhaust pipe.

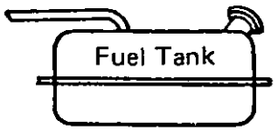

   c. Inflammable Parts

      - Rubber, wooden and resin parts

      Note: Avoid such a location as directly exposed to exhaust gas from the exhaust pipe.

2. Secure adequate clearance between chassis-related parts and mounting equipment or conversion parts.

   Note: Confirm that an adequate clearance is secured between the following relative motion parts:

   a. Engine

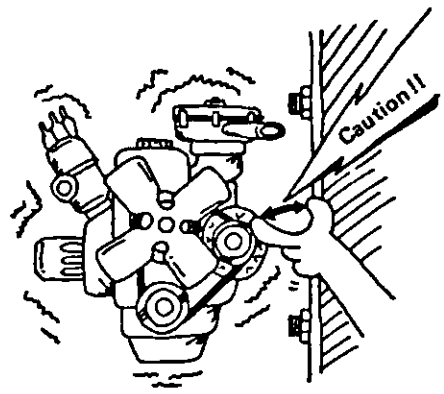

   b. Transmission

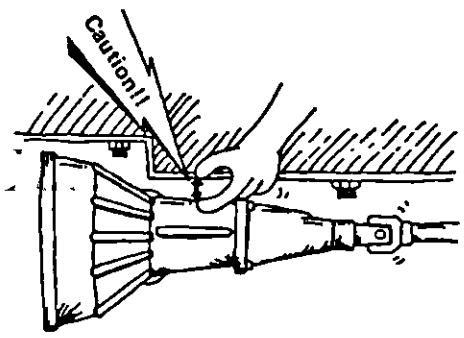

   c. Propeller Shaft

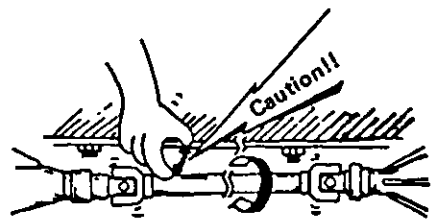

d. Tires

Note: Confirm that no trouble occurs even when the wheels are fitted with chains.

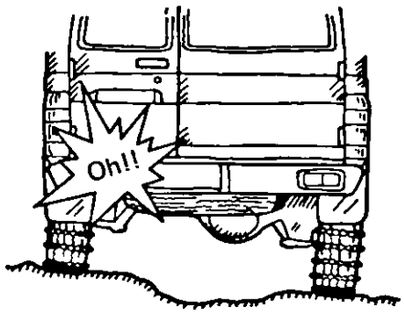

e. Rear Axle

Note: Confirm that no trouble occurs when the vehicle bounces on poor roads.

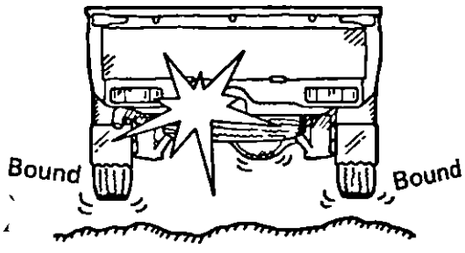

3. CHECK AND SERVICE OF CHASSIS-RELATED PARTS

1. Install mounting equipment and conversion parts to avoid any hinderance to check and service of chassis-related parts.

   a. Battery

      Avoid any hinderance to check as well as removal and installation of battery and battery cover.

   b. Fuel Tank

      Avoid any hinderance to fuel filling and draining.

   c. Brake

      Avoid such an arrangement as mounting equipment obstructs check and service of brake devices (brake booster, LSPV and so on).

   d. Spare Tire

      Do not arrange mounting equipment in operating area of the spare tire carrier handle.

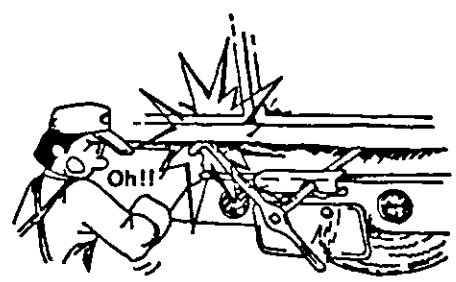

   e. Others

      Avoid any hinderance to use of service equipment such as jack and stepping ladder.

4. BRAKE

Since all brake-related parts are very important from a safety point of view, the following precautions must be confirmed when mounting:

a. Take such a construction to make retightening of pipe joints as well as check, service and replacement of pipes possible.

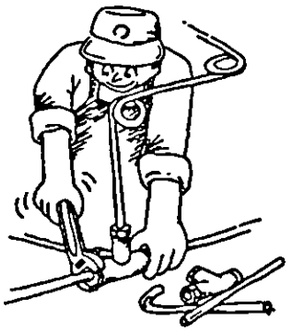

b. Pay attention to the location of air breather in brake piping and take such a construction to make air bleeding possible.

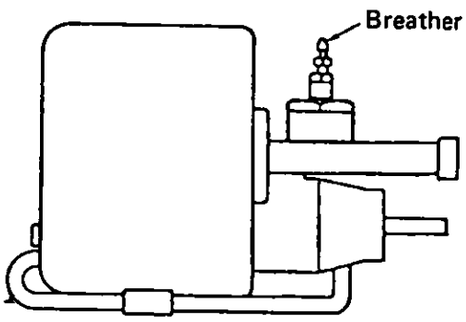

c. Take such a construction to make check, service and replacement of other brake-related parts possible.

d. Apply anti-corrosion and anti-chemical treatment to the pipes of lavatory service truck, chemical carrying truck and others to prevent occurance of problem and adopt a protector, etc., if necessary.

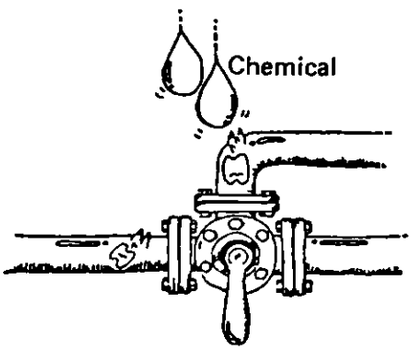

e. Never relocate brake-related parts and never change piping.

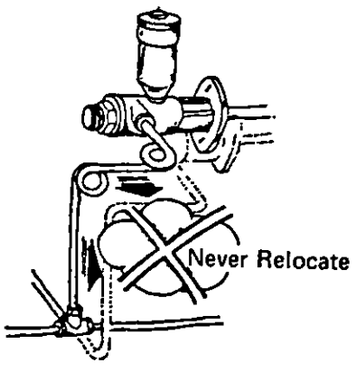

f. Since the pipe has its inner surface plated by copper and is made of a double-rolled tube which is treated with epoxy powder coating after zinc plating, do not heat at high temperature. Never weld and heat at high temperature.

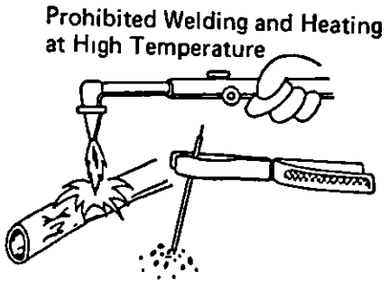

g. Secure an adequate clearance between the pipe and the installing bolt and nut as well as mounting equipment.

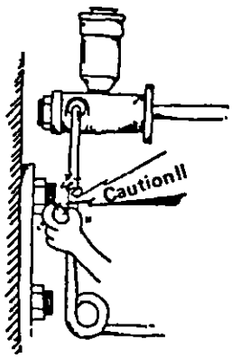

5. WELDING AND DRILLING FOR FRAME

1. Welding and drilling of frame have a great effect on frame rigidity. Since improper welding and drilling may result in damage of frame, avoid such works, if possible. In an unavoidable case, the following precautions should be taken:

   a. Do not weld or drill the upper area and lower area of the flange.

   b. Use an ordinary drill and avoid heating, for example, by use of gas.

      Note 1: Keep the diameter of a hole within 11 mm.

      Note 2: Apply chamfering finish after drilled.

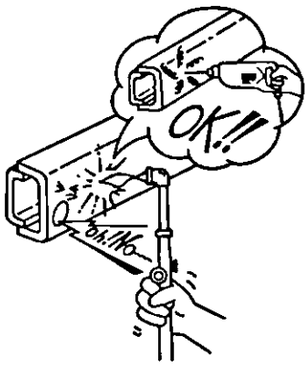

   c. Drill holes at an interval of 20 mm or more.

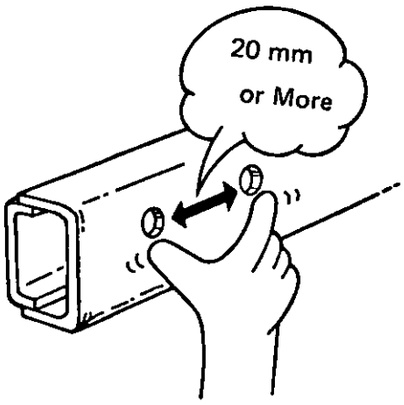

   d. Install parts on the sidemember via bracket. For bracket connection, use bolts or rivets, and avoid welding.

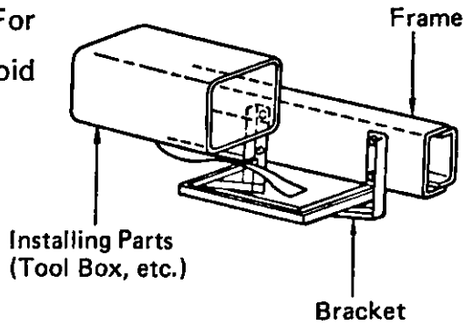

e. When welding mounting equipment, protect the following chassis parts from sparks:

- Brake tube
- Brake hose
- Fuel tube
- Wiring
- Propeller Shaft

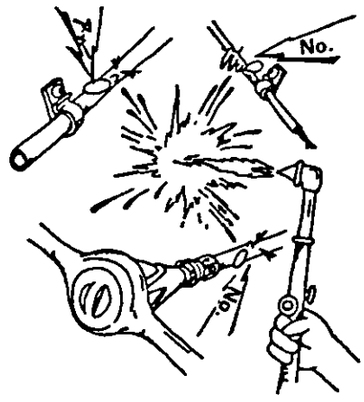

g. For welding work, the following precautions should be taken:

a) Clean the welded area before welding.

b) Select a proper welding rod according to the material.

Note: Use a dry welding rod. In case of a wet rod, use it after dried up.

c) Keep welding speed and rod holding in the optimum condition.

d) Keep the welding current at optimum amperage.

e) Avoid defective welding works such as lack of welding, undercut, sludge, blowhole, crack, pit, etc.

f) Take out an earth wire from the side rail when welding.

g) Avoid welding work on the chassis, if possible.

6. ELECTRICAL WIRING

1. The following precautions should be taken in electrical wiring:

   a. Avoid getting caught by other parts.

      Note: Make sure that the wire will not get caught by parts movement and vibration.

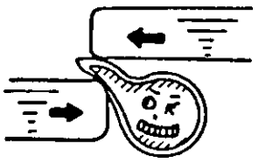

   b. Do not press fit wire.

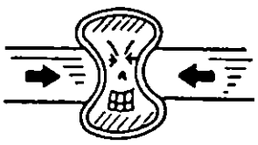

   c. Prevent wire from coming in contact with a sharp edge.

      Note: Avoid wiring near the edges and burrs of iron sheets, spot welding burrs, the edges of tapping screws and bolt heads.

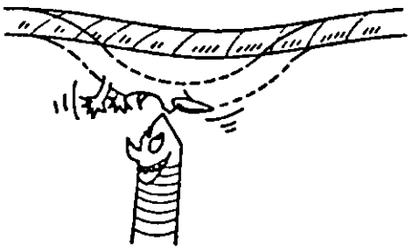

   d. Clamp wire securely by proper spacing to prevent the wire from drooping and coming in contact with other parts.

      Note: 1 Do not clamp or tape wire together with fuel pipe, brake pipe, etc.
      2 Use rubber or vinyl coated clamps.

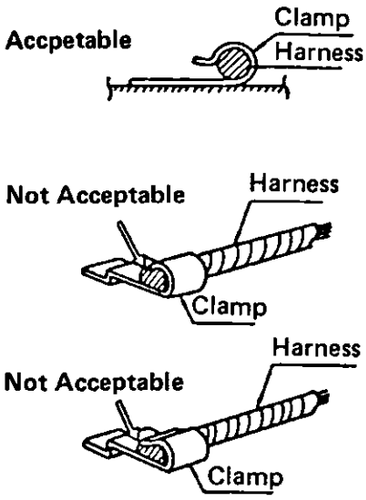

e. Avoid interference of wire with other parts by means of taping as necessary.

Note: Do not tape wire together with fuel pipe and brake pipe.

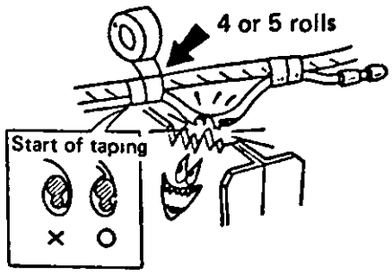

f. Avoid wiring on the frame top and outside areas where wires are easy to be damaged by mounting equipment.

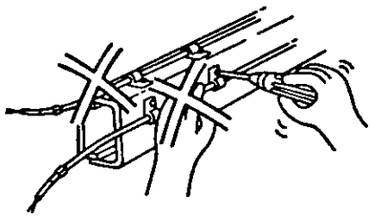

g. Avoid such locations as possible damage due to accumulation of water, dust, mud and snow as well as freezing and stone chipping.

Note: In an unavoidable case, protect the wire by means of a protector or a cover.

h. Use a grommet where the wire goes through the metal sheet so as to prevent water entry and damage.

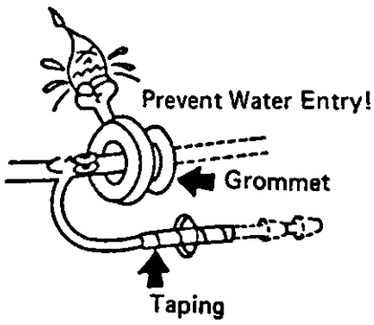

i. Prevent water entry along the wire by a cover or a protector.

Note: Make sure of waterproof boots faced down.

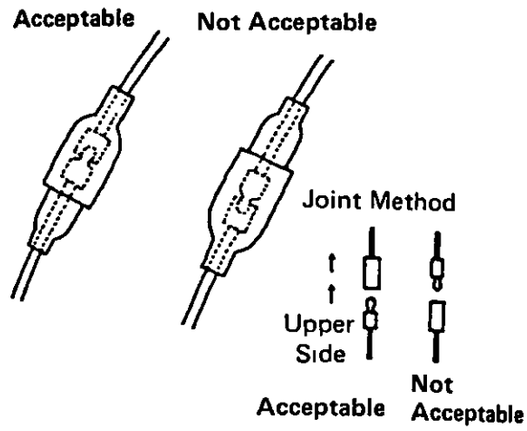

j. In case that the wire is disconnected, place the female side in the direction of the positive side of the electric source to avoid short circuit.

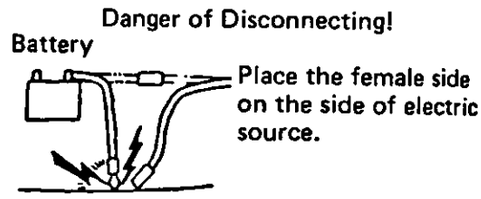

k. Do not pull the wire harness hard when handling.

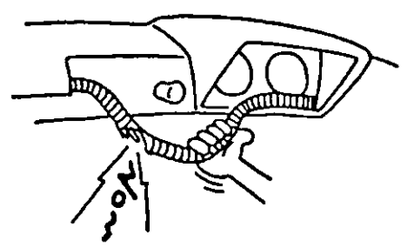

l. Remove the connector by holding both connector bodies. Do not pull the wire harness.

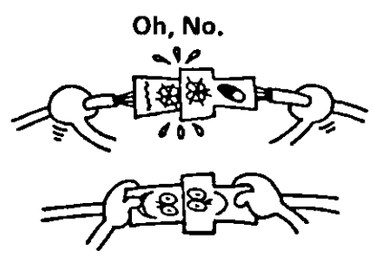

m. When routing wire between relative moving parts (engine, transmission, etc.), prevent the wire from coming in contact with the other parts by making a 30 to 50 mm slack to avoid vibration.

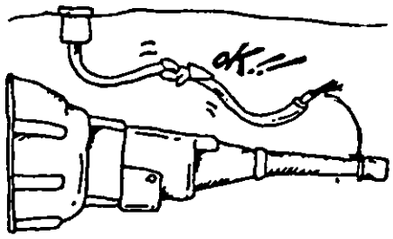

n. Secure an adequate clearance between wire and high-temperature parts.

Notes:1. Confirm that there is no problem from a safety point of view by measuring the temperature, if necessary.

2. Avoid such a location as directly exposed to exhaust gas from the exhaust pipe.

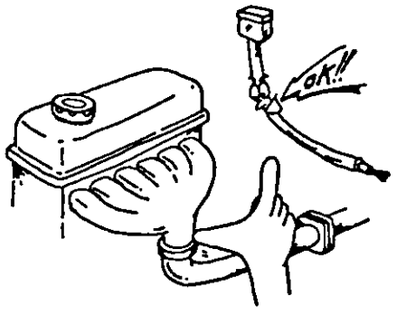

o Route wire to provide easy check and service of wiring and electrical equipment (switches and joints) after mounting the equipment.

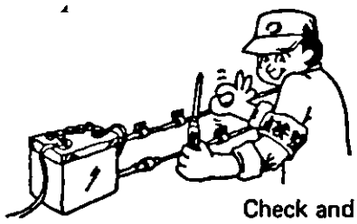

Check and Service

2. Changing and Additional Wiring

a. Do not relocate all electrical parts except for the tail lamp, back-up lamp and license lamp. In an unavoidable case, the following caution should be taken:

a-1 Caution on wires for automobile

* Use low-tension wires for vehicles.

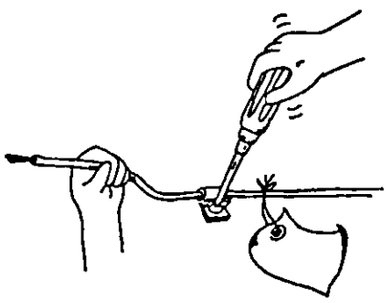

(For reference)

For the low-tension electric wire for vehicles, vinyl coating is applied to the twisted soft copper wires, each wire has a smaller diameter, and its insulating vinyl is slightly thinner due to low tension as compared with the general electric wire. Therefore, it is very flexible for wiring, while close attention should be paid to wire caught, cover damage and usage in the high-temperature area.

The low-tension wire for vehicles (AV wire) has the following specifications:

Allowable Current (A)	Number/Diameter of Wires (mm)	Cross-Sectional Area (mm^2)	Outside Diameter (mm)	Finished Outside Diameter (mm)
9	7/0.32	0.5629	1.0	2.2
12	11/0.32	0.8846	1.2	2.4
15	16/0.32	1.287	1.5	2.7
20	26/0.32	2.091	1.9	3.1
28	41/0.32	3.297	2.4	3.8

The allowable current is quoted from Japanese Automobile Standards, JASO D609–75, AV (Conductor maximum allowable temperature of 60°C), ambient temperature of 40°C.

a-2 Caution on switches

The acceptable current value is also provided for the switches. If this value is ignored and overcurrent is applied, the switch will become hot, the service life of the switch contact point will be shortened, or the switch contact points will be damaged by burning or melting. In the worst case, the vehicle may be burned. Therefore, confirm the acceptable current of the switch which will be used for installing electrical equipment.
Especially, when the original switch of the vehicle is used for additional electrical equipment, make sure that the amount of load of original and additional electrical equipment does not exceed the allowable current.

VEHICLE	+	ACC	<	SW

If the required current exceeds the acceptable current of the switch, add a new relay which matches the load current of the additional electrical equipment and send an electric current to the additional electrical equipment by means of a separate circuit.

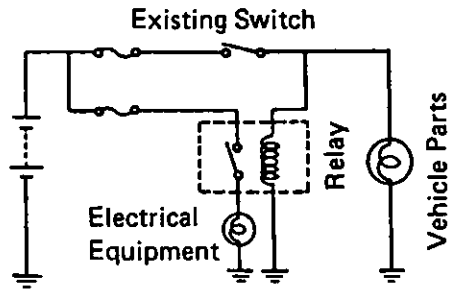

a-3 Caution on fuses

Since the original fuses have their own optimum capacity according to the required load and operating frequency, do not add the load of accessories to the original fuses.

(1) Do not increase the capacity of the original fuses, since such fuses may not be melted when a short circuit takes place in the wire harness of the vehicle and this may result in wire harness burn.

(2) When adding a fuse for additional electrical equipment, select the fuse according to the following formula:

Load Current Value of Electrical Equipment	<	Rated Current of Additional Fuse	x	0.7

7. PIPE ROUTING

For pipe routing, the following precautions should be taken:

a. Avoid getting caught.

Note: Make sure that the pipe will not get caught by moving parts and vibration.

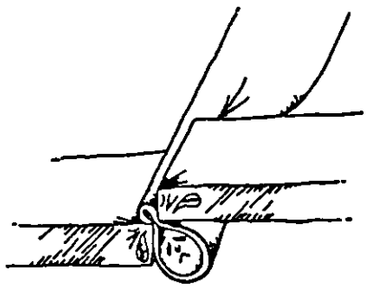

b. Do not press fit hose.

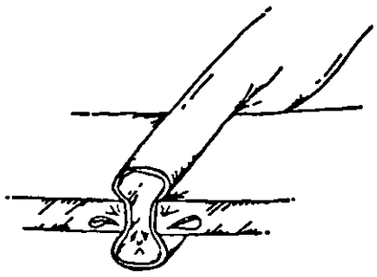

c. Avoid contact with a sharp edge.

Note: Avoid locations near the edge and burrs of iron sheets, spot welding burrs as well as projections such as the top or head of screw and bolt.

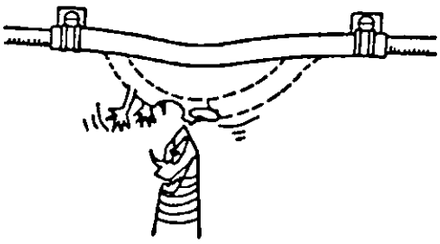

d. Avoid excessive slack and tension.

Note: Make sure that there is no interference with other parts by moving parts and vibration.

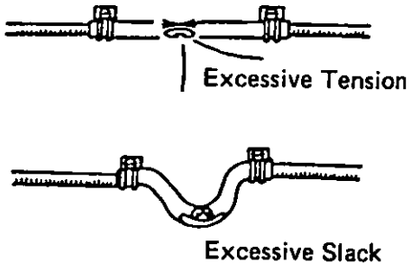

e. Clamp securely by proper spacing as necessary.

Notes: 1. Use rubber or vinyl coated clamps.

2. Do not clamp or tape hose together with wire and so on.

3. Avoid interference between tubes as well as tube and hose.

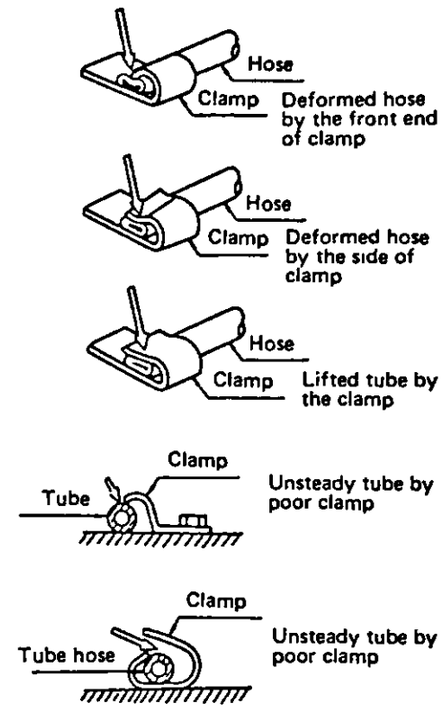

Not Acceptable

f. Avoid pipe routing on the top and outside area of the frame, since such a hose is easily damaged by upper-mounting equipment.

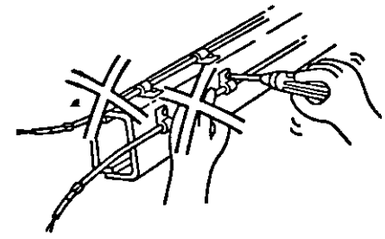

g. Avoid such a location as possible damage by stone chip and so on.

Note: In an unavoidable case, use a protector or a cover.

h. Use a grommet where the hose goes through a metal sheet so as to prevent water entry and damage.

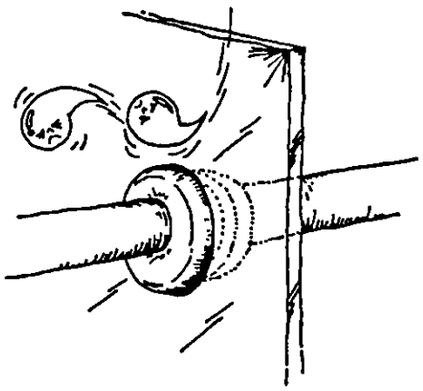

i. Insert a tube into a hose sufficiently and clamp it securely.

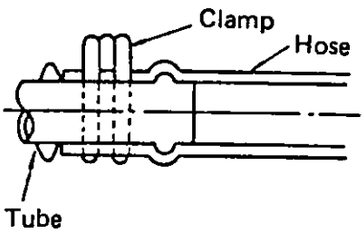

j. Secure an adequate clearance at the high-temperature parts.

Notes: 1. Confirm that there is no problem from a safety point of view by measuring temperature, as necessary.

2. Avoid such a location as directly exposed to exhaust gas from exhaust pipe.

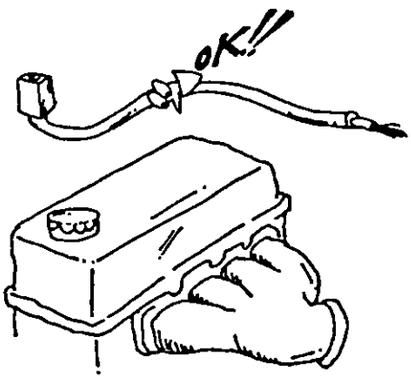

k. Avoid such a location as possible damage due to accumulation of water, dust, mud and snow as well as freezing and stone chipping.

SECTION 3

CAUTION FOR LAND CRUISER

In this section, the detailed precautions exclusively for Land Cruiser are given. It is expected that these will be of assistance in combination with "INTRODUCTION" and "SECTION 2" in the foregoing.

1. WELDING AND DRILLING FOR FRAME

Welding and drilling of frame have a great effect on frame strength. Since improper welding and drilling may result in frame damage, if at all possible, avoid frame work. If unavoidable, the following precautions should be taken:

(1) Drilling

- Use an ordinary drill and never use heat. For example, a gas torch.
- Always chamfer after drilling.

(2) Welding

- Protect the chassis parts brake lines, fuel lines and electrical circuitry from sparks. Avoid welding work on the chassis, if possible.
- Clean the welded area before welding and make certain that the welding rod is the one best suited for the materials to be welded.
- Keep welding speed and rod position in the optimum condition.
- Keep the welding current at the optimum amperage.
- Avoid defective welding works such as incomplete welding, undercut, slug fusing blow-holes, cracks, pitting, etc.
- Always connect the ground wire close to the side rail area to be welded.
- To reduce stress which occurs by welding, minimize the length of the welded area as well as the amount of welding application.
- Avoid the closeness of weld joints as much as possible.
- Avoid welding on the edge and bend because high welding skill is required.

(3) Side Rail

	Frame shape / No.	⧈-shaped section
Drilling	(1)	Keep the diameter of a hole within 11 mm.
	(2)	Do not drill the upper or lower areas of the flange.
	(3)	When drilling the side area, keep 150 mm or more away from high-stress portions such as crossmembers and the welded portion of the spring bracket.
	(4)	Drill holes according to the positions shown below. 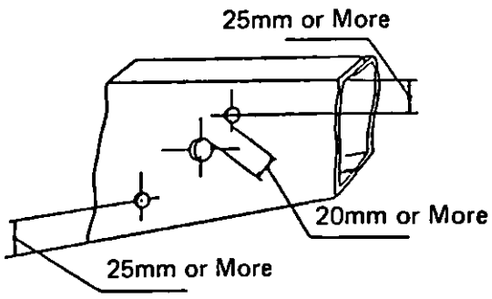
Welding	(1)	Avoid welding. Tighten with bolts or rivets. If this cannot be done, the following precautions should be taken:
	(2)	Do not weld the upper or lower areas of the flange.
	(3)	Keep 10 mm or more away from the bend of the flange.
	(4)	Protect holes from the welding bead (keep 15 mm or more away from the end of a hole).
	(5)	Keep 15 mm or more away from previously welded portions.
	(6)	Keep 150 mm or more away from the crossmembers and the welded portion of the spring bracket.

Frame shape / No.		⊡ -shaped section
Welding Drilling	(1)	Do not drill or weld the frame kick area and the bend area for high-stress portions. 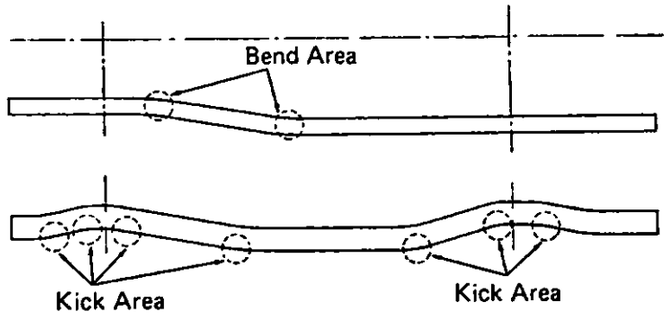

(4) Crossmember

Frame shape / No.		⊡ -shaped section
Welding, Drilling	(1)	Do not the crossmember since this will compromise frame rigidity.
	(2)	Do not mount special equipment of heary weight.

(5) Addition of Sub-Frame

① Install a sub-frame on the vehicle (used for transporting heavy loads or mounted with heavy special equipment) to avoid load weight which concentrates on the main frame.

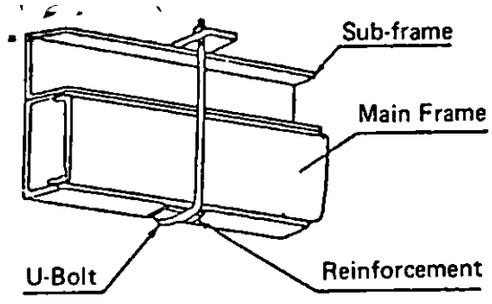

② When installing a sub-frame on the chassis frame, use U-bolts.

Note: Select U-bolts of which design will not damage the pipes and harnesses.

③ Design the sub-frame front end which comes in contact with the chassis frame so that stress does not concentrate on the frame.

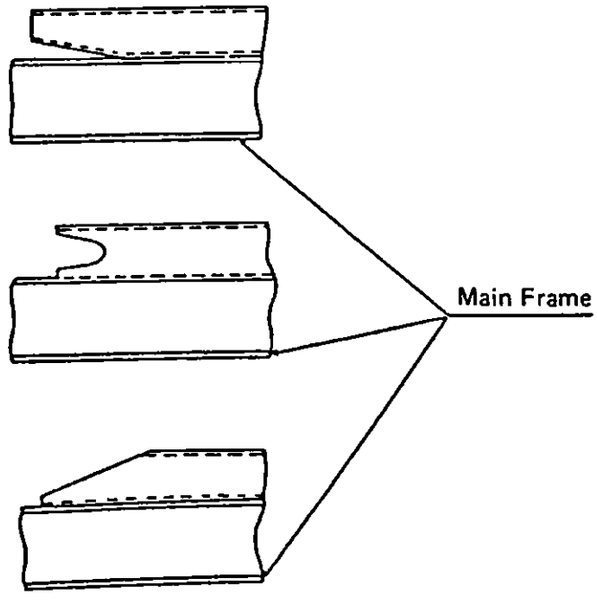

2. SPARE TIRE CARRIER

1. Precautions on Conversion

To hold the spare tire securely, the performance standard is provided for the welding type and clamp type spare tire carriers. Therefore, when adding or converting a spare tire carrier, the following precautions should be taken:

(1) General Precautions

- Take such a construction to allow easy removal and installation by one person.
- Avoid sacrifice to removal and installation work.
- Take such a construction to avoid interference of parts other than the stopper when installing.
- Take such a construction to avoid getting caught when winding.
- Take such a construction to allow a punctured tire to be held securely.
- Secure an adequate clearance between the spare tire and swiveling, moving or heat-discharging section of mounting equipment and conversion parts.
- Install a spare tire on the inner side of the vehicle rear end and external area.
- Affix a caution plate for the spare tire carrier on the easy-to-see place when operating.

3. CLEARANCE BETWEEN THE ORIGINAL VEHICLE PARTS AND MOUNTING EQUIPMENT

The clearance between chassis parts and mounting equipment is very important from a safety point of view. Confirm that there is no problem according to the following check points:

	Parts	Check Point	Estimated Clearance
Engine	Installed parts of the engine unit	1. Confirm that an adequate clearance is secured for engine parts from standstill to maximum engine load because there is relative motion of the engine unit and the vehicle body. 2. When installed on the engine unit, confirm that there is no effect on the engine unit.	Upper area of engine 30 mm or more Lower area of engine 25 mm or more
	Installed parts of the engine compartment		
Chassis	Clutch Transmission	1. Since it is necessary to move the transmission assy backward for the purpose of pulling out the clutch splined shaft when removing and installing clutch and transmission assy, do not arrange mounting equipment in this area.	Rear area of transmission FJ: 180mm or more BJ: 75mm or more HJ: 80mm or more
	Propeller shaft		25 mm or more (all around)
	Rear axle	1. Mount special equipment according to the upper limit of tire and differential shown on another page.	See page 80
	Brake	Since all brake-related parts are very important from a safety point of view, the following precautions must be confirmed when mounting. • Take such a construction as make pipe joints retightening as well as check, service and replacement of pipes possible. • Pay attention to the location of air breather in brake piping and take such a construction as make smooth air breathing possible. • Apply anti-corrosion and anti-chemical treatment to the pipe of lavatory service truck, chemical truck and others to prevent occurance of problem and adopt a protector, etc., if necessary. • Give consideration to vehicle in motion when connecting the brake hoses to the front and rear wheels. • Secure an adequate clearance between brake pipes and mounting equipment.	Brake hose: 50mm or more

	Parts	Check Point	Estimated Clearance
Chassis	Brake	• Never relocate brake-related parts and never change piping. • Since the pipe has its inner surface plated by copper and is made of a double-rolled tube which is treated with epoxy powder coating after zinc plating, do not heat at high temperature. Never weld and heat at high temperature. • No alterations may be made to the hydraulic brake systems (including load sensing proportioning and by-pass valve) and rear leaf springs.	
	Exhaust pipe and muffler	Since thermal effect and contact of exhaust pipe and muffler are important items from a safety point of view, secure adequate clearance between such parts of exhaust system and mounting equipment and confirm that there is no trouble relating to safety factors by measuring temperature, if necessary. See the estimated clearance below.	

Required clearance mm		Parts Application
Exhaust Pipe	Muffler	
50	150	• Mud guard (rear) • Three joint center bearing rubber • Leaf spring • Heater hose
100	200	• Mud guard (front) • Brake vacuum hose • Vacuum pump oil hose • Parking brake outer cable • Brake pipe • Fuel tank • Tire • Rear deck floor (except the case of transporting person and perishable foods)
150	250	• Speedometer cable • Accelerator wire • Wire harness • Vacuum sensing hose • Rear deck floor (the case of transporting person and perishable foods)
200	300	• Tool box

4. DECK CONVERSION (Pickup Series)

4-1. Side Stake

We recommend that you to adopt the optional side stake, when modifying for special use, refer to page 42 and be careful of the following points.

(1) Since structurally this is a cantilever against horizontal force, when mounting the side stake, the front end must be connected to the guard frame for reinforcement, and the rear end or general area must be reinforced from the inside according to the illustration shown below.

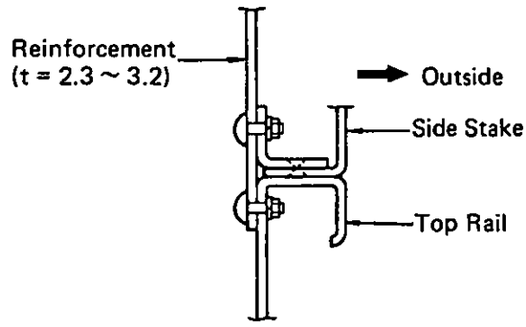

(2) For the rearmost end, install the connecting reinforcement according to the drawing to prevent the rails from falling in.

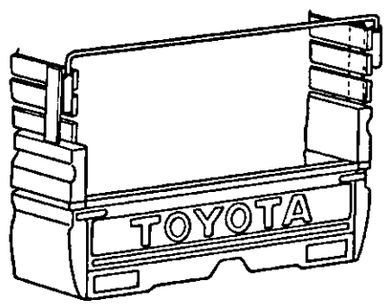

(3) Apply a rust-inhibitor after drilling holes in the top rail.

Reference only

Side stake mounting reinforcement examples

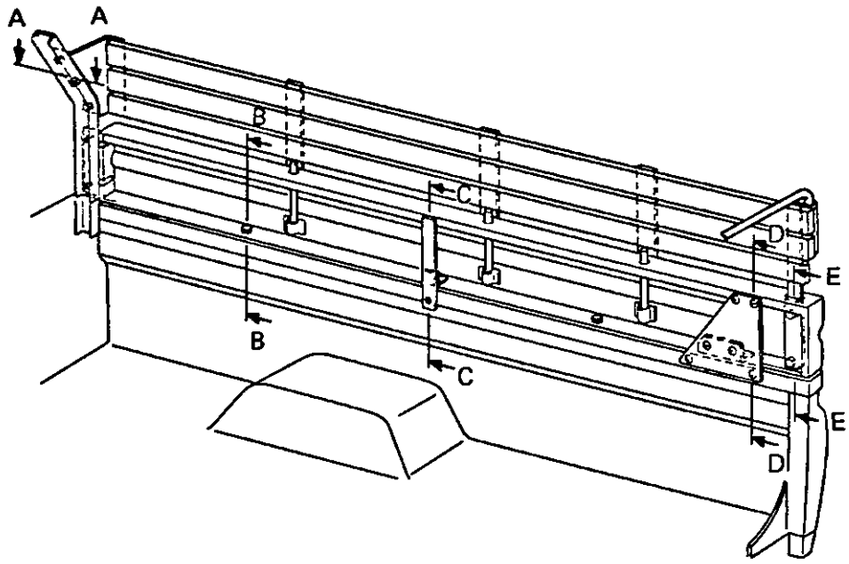

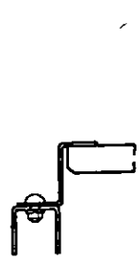

A-A Section

B-B Section

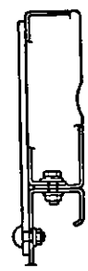

C-C Section

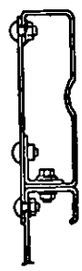

E-E Section

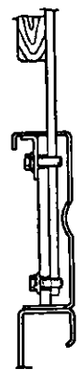

D-D Section

4-2. Canvas Hood (Pickup Series)

We recommend that you to adopt the optional canvas hood. When converting for special use, the following precautions should be taken:

(1) Overlap the deck and canvas hood by 150 ~ 200 mm for waterproofing.

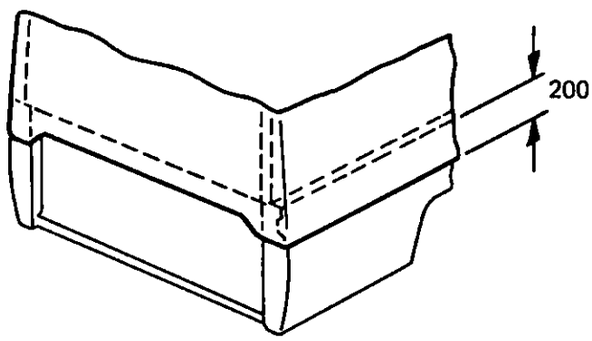

(2) Install shock absorbing material as shown below, because a limited clearance between the cab and the front end may cause canvas lower end to shudder while driving.

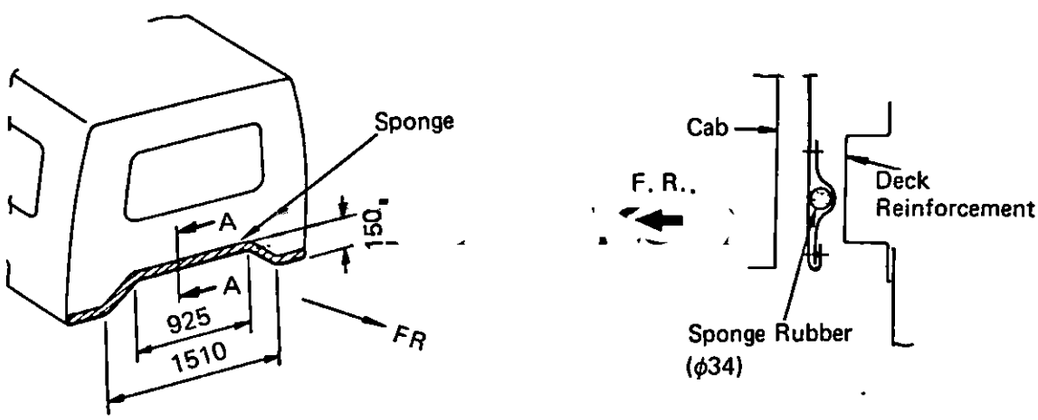

A-A Section

4-3. Conversion of Deck Floor

Reinforce the floor so that load can be dispersed over two sills or more particularly when load is concentrated on a certain part of the deck.

4-4. Body (Pickup & Van Series)

(1) Any structural member removed from the body, cab or cowl assembly areas must be replaced or included in the body structure of any special body installed.

(2) All cuts made into any sheet metal area must be finished with a drilled or filed radius to prevent sheet metal cracks.

(3) Clearance between Parts of Body and Deck or Wheel Housing and Tire.

- Cab X Deck

  Keep the clearance A between Cab and Deck as shown in the drawing on page 45.

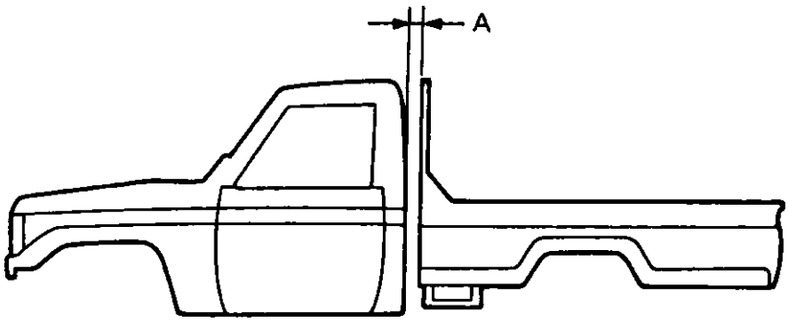

- Wheel Housing

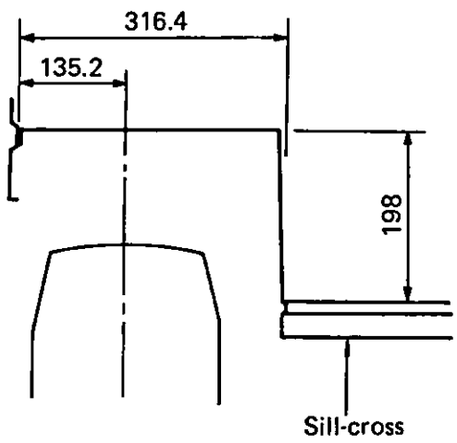

(4) Precautions for Seat Conversion

- A seat anchorage must be installed on the crossmember flange.
- If impossible, strengthen the seat anchorage using reinforcements.

Reference only

Detailed Drawing of Clearence between Cab and Deck

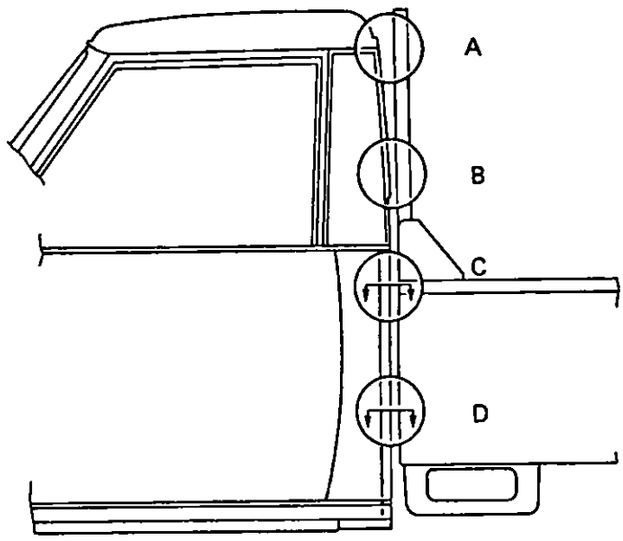

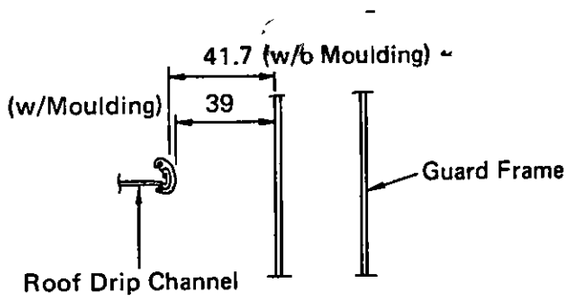

A

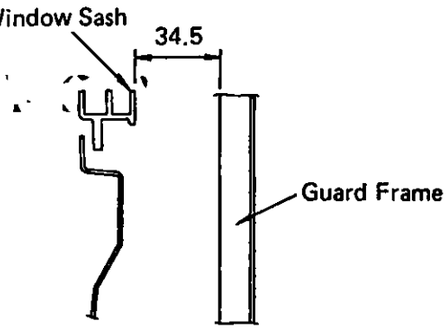

B

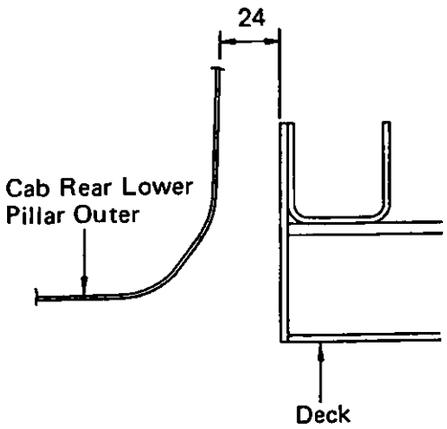

C

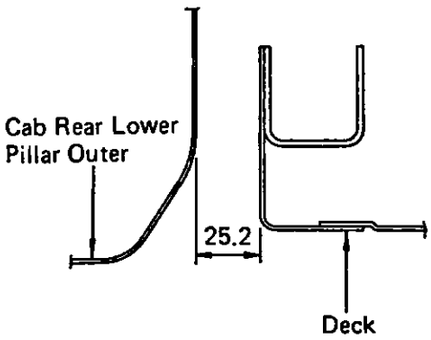

D

5. REAR LAMPS AND SIDE REFLECTORS

1. Rear Combination Lamp Installation

In case of a chassis with cab, a rear combination lamp is installed by use of a combination rear lamp bracket sub-assy (for land transportation) as shown below. When installing a combination rear lamp, the following precautions should be taken:

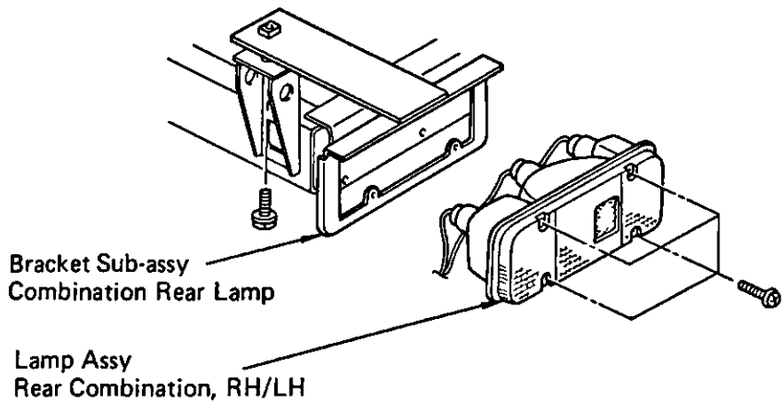

(1) Confirm that this installation complies with the general vehicle regulations.

(2) Set a water drain hole of combination rear lamp at the right bottom side.

(3) Confirm that there is no hindrance to visibility behind the combination rear lamp.

(4) Prepare a water guard to protect the lamp from water splash by rear wheels, and so on.

2. Licence Plate and Licence Lamp

A cab and chassis model is fitted with a temporary licence plate on which a licence lamp is installed when shipping. Therefore, when mounting special equipment, use this temporary licence plate in compliance with regulations.

(1) Apply welding or bolt tightening to a licence plate, since the licence plate construction should not allow its easy removal from the body from a legal point of view. When applying bolt tightening, calk or weld the screw area.

(2) Avoid such a location as hidden by the rear bumper, rear combination lamp and so on, or as hinder operation of the spare tire carrier.

(3) For the dimensions of the licence plate and licence lamp, see page 88 ~ 89.

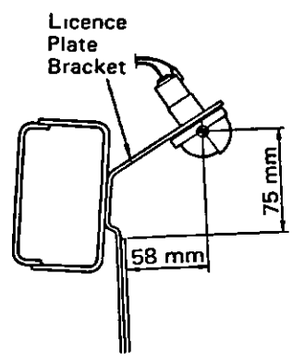

3. Rear Reflector

Since the rear reflector has been incorporated into the rear combination lamp, this installation is not needed.

4. Side Reflector

If necessary, install a side reflector in accordance with the local regulations.

6. LOAD SENSING PROPORTIONING VALVE (LSPV)

This vehicle is equipped with the LSPV which is to proportionate the brake effectiveness to loading conditions, thus making stable brake performance possible at any time.
In case of a completed vehicle, the LSPV is adjusted by the factory. However, this adjustment is not available for Cab & Chassis model, because it is an incompletely built unit. After vehicle conversion or mounting equipment, please make this adjustment for the cab & chassis model.

6-1. Adjustment Method

<SST, Tools and gauges>

SST	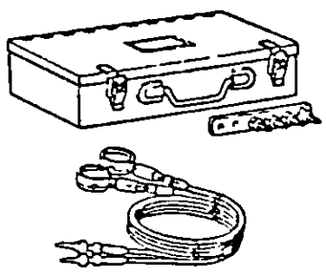	09709-29017	Gauge Set, LSPV
Gauge	Axle Weight Meter		

<Preparation before adjustment>

1 Measure the rear axle weight using the axle weight meter.

2 Install a LSPV Gauge set for air bleeding of LSPV Gauge.
SST [09709-29017]

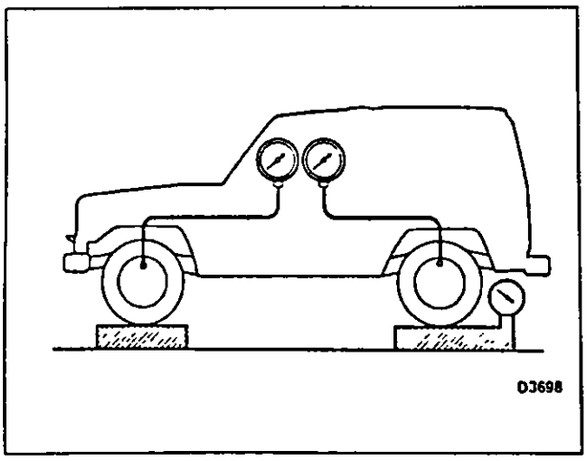

<Oil Pressure Check>

Check whether the rear wheel cylinder is within the standard when the front wheel cylinder pressure is 50 kg/cm² and 80 kg/cm².

How to obtain the rear wheel cylinder standard pressure

① Obtain the oil pressure breaking point from rear axle weight using the chart A. (See page 50 for details of LSPV performance curve.)

Example:

The oil pressure breaking point is 28.1 kg/cm² when the rear axle weight is 1120 kg.

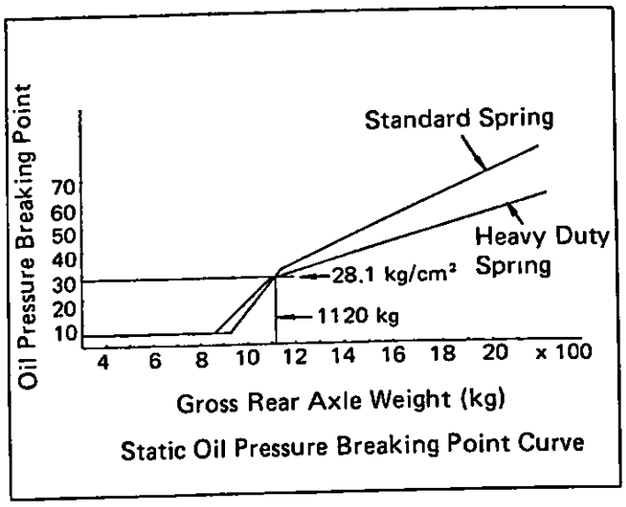

Static Oil Pressure Breaking Point Curve

② After finding the oil pressure breaking point, draw the performance curve (parallel line to valve unit performance curve) in LSPV performance curves. And read the rear wheel cylinder oil pressure where the front wheel cylinder is 50 kg/cm² and 80 kg/cm². (See page 50 for details of LSPV performance curve.)

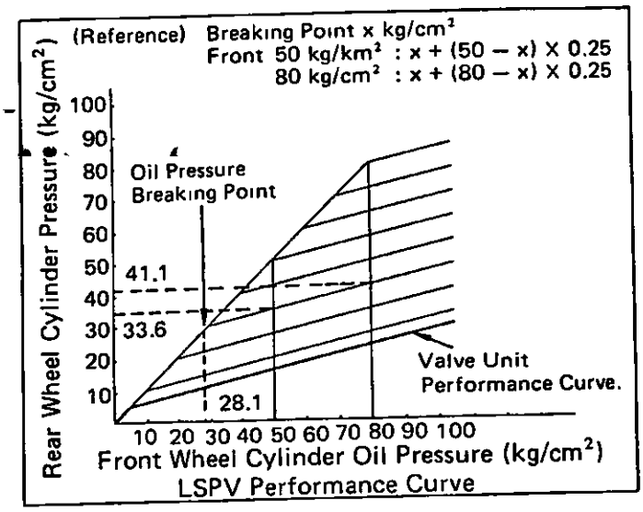

LSPV Performance Curve

Example:

When the oil pressure breaking point is 28.1 kg/cm² and the front wheel cylinder oil pressure is 50 kg/cm² and 80 kg/cm², the standard oil pressure is 33.6 kg/cm² and 41.1 kg/cm² respectively.

<Standard range of oil pressure>

50 kg/cm² . . . ±5 kg/cm²

80 kg/cm² . . . ±7 kg/cm²

Reference

How to calculate to obtain standard oil pressure. Formula for calculating rear wheel cylinder oil pressure from front wheel cylinder oil pressure.

Front

50 kg/cm² : x + (50– x) X 0.25

80 kg/cm² : x + (80– x) X 0.25

<Oil Pressure Adjustment>

If the oil pressure exceeds the standard, adjust the oil pressure as follows:

① Adjust the length of the No. 2 shackle.

Low pressure . . . Lengthen A High pressure . . . Shorten A

Standard A dimension: 90 mm

Adjustable range: 84 ~ 93 mm

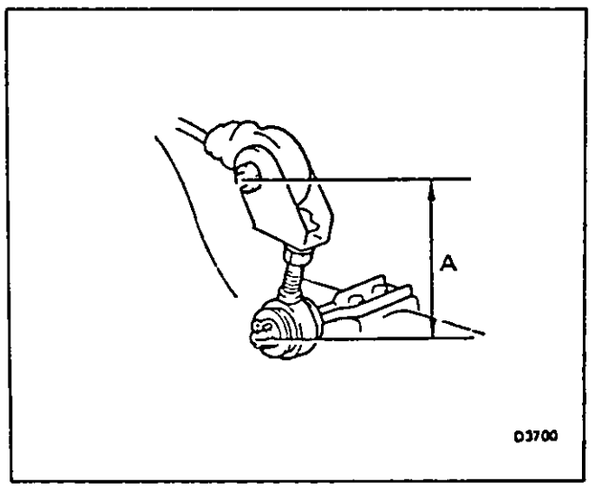

Note

One turn of the No. 2 shackle changes the oil pressure by about 1.0 kg/cm².

② When pressure cannot be adjusted by the No. 2 shackle, raise or lower the valve body for adjustment.

Low pressure . . . Lower the body High pressure . . . Raise the body

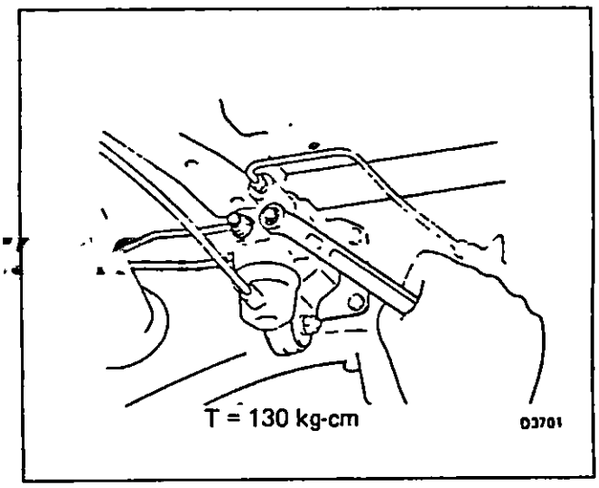

6-2. LSPV Performance Curve

Notes: 1. Brake pedal should not be depressed twice and/or released while adjusting the oil pressure.

2. Read the value of rear brake pressure two seconds after adjusting the oil pressure of front wheel cylinder.

Static Oil Pressure Breaking Point Curve

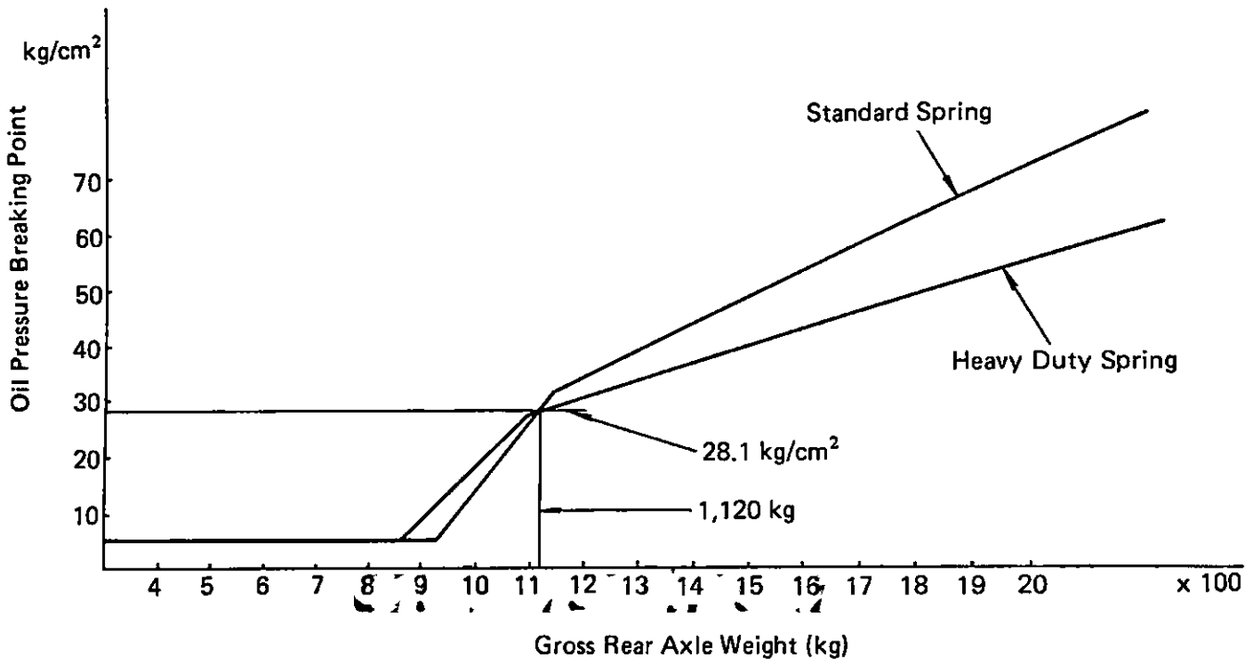

LSPV Performance Curve

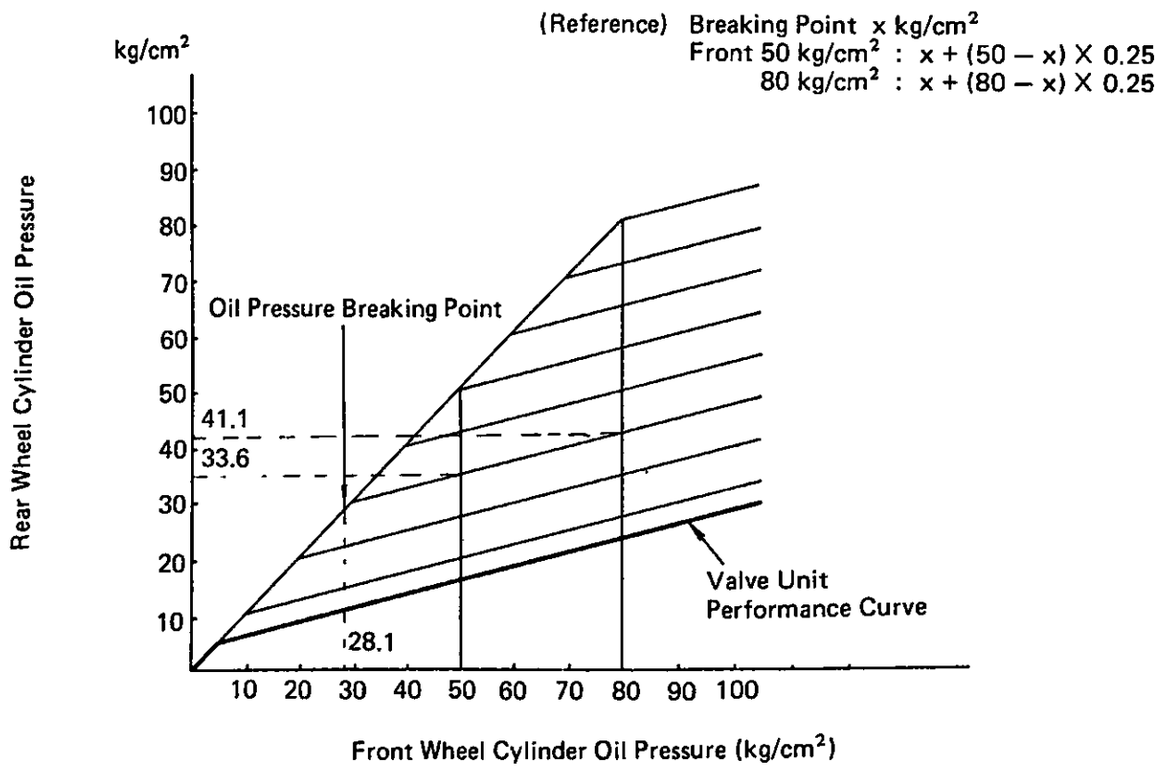

7. PAINT REPAIR

When performing paint repair on the cab related parts, the following precautions should be taken for masking those parts that are easily damaged by heat while drying the paint.

(1) Necessary Parts for Masking

- Completely mask stickers such as caution plates, name plates and so on.
- As the emblems shown below are an adhesive type, be especially careful not to mask them so they peel off with the tape.

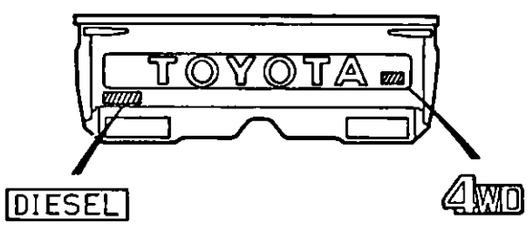

Pickup

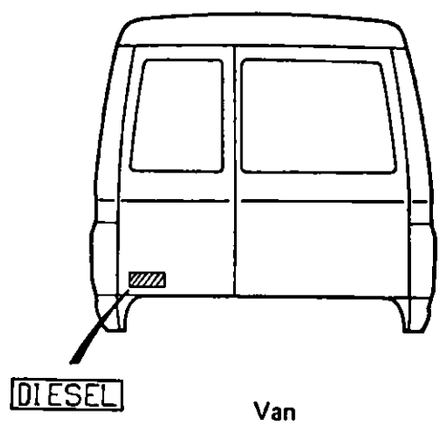

Van

- Never apply paint to the door check arms as they are coated with grease.

(2) Installed Parts and Temperature Limit of Chassis with Cab

As baking paint and forced drying are done at high temperature, conduct such proper treatment as adoption of heat insulating material or reflecting material and removal of the parts with poor heat resistance, having the "LIMIT TEMPERATURE OF MAJOR PARTS" taken into consideration.

7-1. Temperature Limit of Major Parts

(1) Body

Part Name	Material	Temperature Limit (°C)	Remarks
Food rest block	EPDM	100	Pickup only
Window frame hinge cover	AAS	80	Pickup only
Heater air duct hole cover	PP	100	
Ventirator louver	AAS	80	
Windshield weather strip	EPDM	100	
MUD guard Fr & Rr	TPE (Formed)	100	
	EVA (Summary)	70	
Front door weather strip	EPDM	100	
Quarter window weather strip	EPDM	100	Van only
Quarter window grass, run	EPDM	100	Van only
Back window weather strip	EPDM	100	Pickup only
Back door weather strip	EPDM	100	Van only
Side step cover	EVA	70	
Roof panel seal	EPDM	100	Pickup only
Rear bumper, side seal	TPE	100	

(2) Door

Seal, door check	EPDM Sponge rubber	80		
Handle assy, door window regulator	6 Nylon, polyester	80		
Handle sub-assy, Fr door inside	ABS Tripolima	80		
Lock assy, front door	Polyester	100		Fr. Door
Knob, door lock control	ABS Tripolima	80	Back door is common	
Holder, door lock control knob	6 Nylon	80		
Seal, Fr door Fr lower frame	Rubber	80	w/o Triangular window	
Window assy, Fr door ventilating	6 Nylon, rubber	80	with Triangular window	
Cover, Fr door service hole	Polyethylen film	70		
Run, Fr door glass	EPDM	100		
Weather strip assy, Fr door glass outer	EPDM, Polyester	80		
Weather strip assy, Fr door glass inner	Vinyl chloride	60		
Cover, back door hinge	Polypropylene	80		
Pad, back door hinge male	EPDM Sponge rubber	80		
Stopper S/A, back door No. 2	Rubber	80		Back door
Lock assy, back door	Polyester	100	(Van only)	
Lock assy back door lower	Polypropylene	80		
Handle S/A, back door inside	ABS Tripolima, polyester	80	LH door	
Handle, back door inside	Polyester	100	RH door	
Cover, back door service hole	Polyethylene film	70		

(3) Instrument Panel

Part Name	Material	Temperature Limit (°C)	Remarks
Cylinder assy, glove compartment door lock	Polyester	100	with key — Glove door
Lock assy, glove compartment door	Polyester	100	w/o key — Glove door
Panel sub-assy, instrument cluster finish	ABS Tripolima + Acrylic	80	
Hood sub-assy meter	Slash formed urethane foamed	110	only model with accesarry meter
Pad sub-assy, instrument panel safety	Vacuum formed Urethane foamed	110	
Cover defroster nozzle opening	Extra heat resisting ABS tripolima	110	only model without heater
Panel, instrument cluster finish center No. 1	ABS tripolima	80	
Panel instrument cluster finish center No. 2	ABS tripolima	80	
Resister assy, instrument panel side	ABS tripolima	80	
Grip sub-assy, instrument asist	Soft vynil chloride	80	only model with instrument panel grip
Duct sub-assy, heater to register	Polypropylene	80	only model with heater
Register assy instrument panel	ABS tripolima	80	
Nozzle assy, defroster	Polypropylene	80	only model with heater
Compartment glove	Polypropylene	80	

(4) Interior

Fr door trim (Film)	Vinyl chloride	60	
Fr door pull handle	Vinyl chloride	60	
Quarter trim	Vinyl chloride (+ board)	60	Van only
Belt hole cover	PP	80	
Belt (Outer, 3 points, ELR)	PP (Sholder cover)	80	
Back door trim	Vinyl chloride (+ board)	60	Van only
Lock control cover	PP	80	Van only
Opening trim (Door area)	Vinyl chloride	60	
Scuff plate	PP	80	
Cowl side trim	PP	80	
Floor mat	Vinyl chloride foamed	60	
Wheel house cover	Vinyl chloride foamed	60	
Back door pull handle	PP	80	Van only
Seat (Fr. or Rr.)	Vinyl chloride + Urethane	60	

Part Name	Material	Temperature Limit (°C)	Remarks
Belt (Inner boot type)	Lower density PE	70	
Side heater cover	PP	80	Van only
Crip (For trim)	6 Nylon	80	Van only
Belt hanger	ABS	80	
Sun visor	Vinyl chloride + Urethane	60	
Assist Grip	PP	80	
Trim roof head lining (Opening)	Vinyl chloride	60	
Reinforce cover	PP	80	Van only
Roof head lining	Vinyl chloride	60	

(5) Interior and Exterior Color Combination

Body Color		Trim Color		Application Model
Color No.	Color Name	Trim Code	Trim Color	
033	White	11	Gray	All Models
3F4	Red			
4E9	Beige	41	Brown/Beige /Grege	
558	Yellow			
202	Black	11	Gray	
6H9	Grayish Olive			
8B2	Blue			

(6) Color Formula of Land Cruiser Exterior Colors

Color NO.	Color Name	Color Formula											
		By Acrylic Lacquer						By Baking Paint					
033	White	531	361	400	618			536	361	400	466		
		97.6	1.9	0.5	T			98.0	1.5	0.4	0.1		
3F4	Red	620	480	400	531			3379	3487	3585	3540	3400	
		56.6	41.6	1.4	0.4			55.2	34.4	8.0	1.2	1.2	
4E9	Beige	531	361	400	584			3540	3585	3361	3400		
		66.7	27.5	4.3	1.5			75.9	30.2	4.6	1.1		
558	Yellow	611	531	480	582	618		461	538	361	585	466	
		46.2	49.0	4.4	0.4	T		36.2	53.8	7.9	2.0	0.1	
202	Black	400						400					
		100						100					
6H9	Glayish Olive	300	339	411	525			300	411	339	525		
		43.0	36.0	19.0	2.0			32.0	24.0	34.0	10.0		
8B2	Blue	365	610	131	400			396	300	464	309	411	
		42.0	26.9	22.7	8.4			56.0	17.0	14.0	12.0	1.0	

SECTION 4

1. GENERAL INFORMATION

The special equipment dimensions such as length, width, height and weight are limited in accordance with the vehicle size.

(1) Width

To minimize the danger, the width of special equipment should not exceed be 100 mm more than that of the cab at both ends.

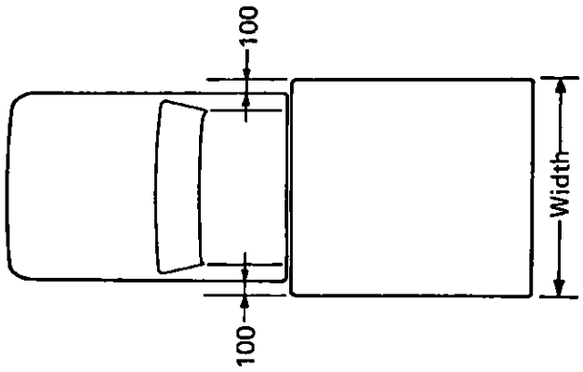

(2) Rear Overhang

The rear overhang means the distance from the center of rear axle to the rear end and is determined by wheelbase length.

Please see the limitation of its extension below.

Rear Overhang	Application Model	Figure
1/2 of The Wheel Base or Less	All Vehicles	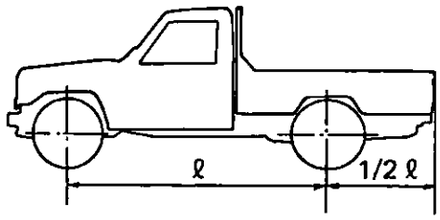

(3) Maximum Permissible Slant Angle

This means the maximum slant angle at which the vehicle remains unoverturned when unloaded.
The longer the tread is, or the lower the center of gravity is, the larger this angle is.

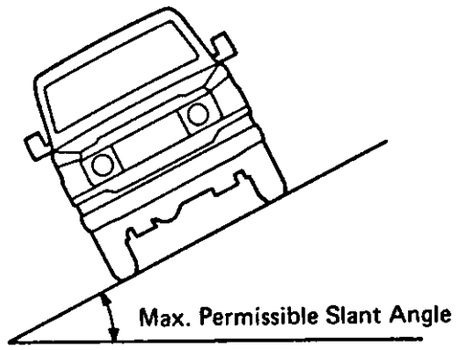

The maximum permissible slant angle of completed vehicle with special equipment should be more than 35°.

(4) Front Wheel Weight Distribution (When Loaded)

This means the percentage of vehicle total weight applied on front wheels.

Limit: Fr. wheel weight distribution ≧ 30% ... $\left(\frac{\text{Fr. axle vehicle total weight}}{\text{Vehicle total weight}} \times 100 \geqq 30\%\right)$

In this case, passengers or cargo should be evenly distributed in the vehicle.

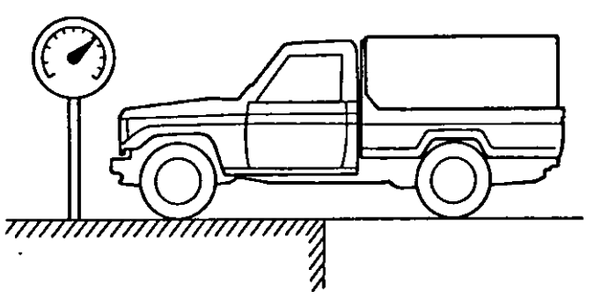

Front Wheel Weight Distribution

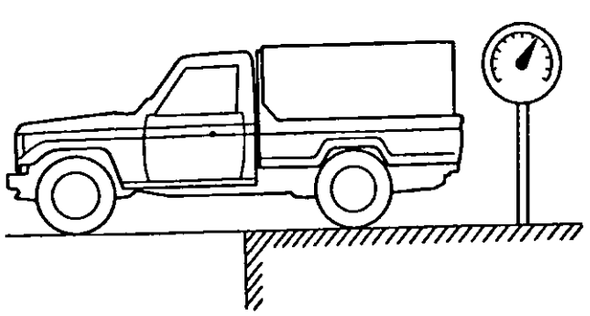

Rear Wheel Weight Distribution

2. WEIGHT RESTRICTIONS

(1) For the completed vehicle, each weight must be within the maximum allowable value shown in the following table.

Item \ Model	BJ75RP-KR3
Curb Weight (Cab & Chassis Model)	1,725, 2,050 (Full OPT)
Weight of Special Equipment, Accessories and Other Permanently Attached Components (Do not Include Passengers or Cargo)	A kg
Curb Weight of Completed Vehicle	B kg
Total Weight of Passengers and All Cargo or Luggage (Include Water, Fuel or Oils)	C kg
Gross Vehicle Weight (GVW) of Completed Vehicle	3,035 kg

Note: When the curb weight of the completed vehicle increases, the maximum loading capacity decreases because Gross Vehicle Weight (GVW) is fixed.

Curb Weight (Cab & Chassis)		Weight of Added Body Components		Passengers and Load	
1,725 kg 2,050 kg (Full OPT)	+	A	+	C	≦ 3,035 kg

Item \ Model	BJ75$^{R}_{L}$V-KR	HJ75$^{R}_{L}$V-KR	FJ75$^{R}_{L}$V-KR	FJ75LV-MR	FJ75LV-MRV
Curb Weight of Cab & Chassis (kg)	–	–	–	–	–
Gross Vehicle Weight (GVW) of Completed Vehicle (kg)	3,035	3,035	3,035	3,035	3,035

*··· Full OPT

Item \ Model	HJ75RV-MRQ	FJ75RV-MRQ	BJ75LV-MRW	BJ75$^{R}_{L}$P-KR	HJ75$^{R}_{L}$P KR
Curb Weight of Cab & Chassis (kg)	–	–	–	–	–
Cross Vehicle Weight (GVW) of Completed Vehicle (kg)	3,035	3,035	3,035	3,035	3,035

Item \ Model	HJ75LP-MR	FJ75$^{R}_{L}$P-KR	FJ75LP-MR	FJ75LP-MRV	HJ75RP-MRQ
Curb Weight of Cab & Chassis (kg)	–	–	–	–	–
Gross Vehicle Weight (GVW) of Completed Vehicle (kg)	3,035	3,035	3,035	3,050	3,035

Item \ Model	BJ75LP-MRW	FJ75RP-MRN	HJ75RP-MPN	BJ75RP-KR3	BJ75RP-MR3
Curb Weight of Cab & Chassis (kg)	–	–	–	1,725 *2,050	1,730 *2,055
Gross Vehicle Weight (GVW) of Completed Vehicle (kg)	3,035	3,035	3,035	3,035	3,035

* · · · Full OPT

Item \ Model	HJ75RP-KR3	FJ75$^{R}_{L}$P-KR3	FJ75$^{R}_{L}$P-MR3	HJ75RP-MRQ3	FJ75RP-MRQ3
Curb Weight of Cab & Chassis (kg)	1,775 *2,130	1,680 *2,040	1,685 *2,045	1,785 *1,990	1,690 *1,930
Gross Vehicle Weight (GVW) of Completed Vehicle (kg)	3,035	3,035	3,035	3,035	3,035

(2) The Gross Vehicle Weight (GVW) is further restricted by Gross Axle Weight (GAW). The restrictions are as follows. (Gross Vehicle Weight must be under the condition of full passengers and load as mentioned in the foregoing.):

Item	May not Exceed				
Item \ Model	BJ75$^{R}_{L}$V-KR	HJ75$^{R}_{L}$V-KR	FJ75$^{R}_{L}$V-KR	FJ75LV-MR	FJ75LV-MRV
Front Gross Axle Weight (GAW)	1,300	1,300	1,300	1,300	1,300
Rear Gross Axle Weight (GAW)	2,050	2,050	2,050	2,050	2,300
Gross Vehicle Weight (GVW)	3,035	3,035	3,035	3,035	3,035

Item	May not Exceed				
Model / Item	HJ75RV-MRQ	FJ75RV-MRQ	BJ75LV-MRW	BJ75$^{R}_{L}$P-KR	HJ75$^{R}_{L}$P-KR
Front Gross Axle Weight (GAW)	1,300	1,300	1,400	1,300	1,300
Rear Gross Axle Weight (GAW)	2,050	2,050	2,050	2,050	2,050
Gross Vehicle Weight (GVW)	3,035	3,035	3,035	3,035	3,035

Model / Item	HJ75LP-MR	FJ75$^{R}_{L}$P-KR	FJ75LP-MR	FJ75LP-MRV	HJ75RP-MRQ
Front Gross Axle Weight (GAW)	1,300	1,300	1,300	1,300	1,300
Rear Gross Axle Weight (GAW)	2,050	2,050	2,050	2,300 *1,850	2,050
Gross Vehicle Weight (GVW)	3,035	3,035	3,035	3,050	3,035

Model / Item	BJ75LP-MRW	FJ75PR-MRN	HJ75RP-MRN	BJ75RP-KR3	BJ75RP-MR3
Front Gross Axle Weight (GAW)	1,400	1,300	1,300	1,300	1,300
Rear Gross Axle Weight (GAW)	2,050	2,050	2,050	2,050	2,050
Gross Vehicle Weight (GVW)	3,035	3,035	3,035	3,035	3,035

* w/Sand Tire

Item	May not Exceed.				
Model / Item	HJ75RP-KR3	FJ75$^{R}_{L}$P-KR3	FJ75$^{R}_{L}$P-MR3	HJ75RP-MRQ3	FJ75RP-MRQ3
Front Gross Axle Weight (GAW)	1,300	1,300	1,300	1,300	1,300
Rear Gross Axle Weight (GAW)	2,050	2,050	2,050	2,050	2,050
Gross Vehicle Weight (GVW)	3,035	3,035	3,035	3,035	3,035

Although the total of the front Gross Axle Weight Rating (GAWR) and the rear GAWR exceeds the GVW, the actual total GVW should not exceed the GVW. However, the front and rear GAWRs are allowed slightly forward or rearward regardless of the cargo.

(A) Actual front axle weight $\leqq$ GAWR (front)

(B) Actual rear axle weight $\leqq$ GAWR (rear)

(A) + (B) $\leqq$ GVWR

(3) The front GAW, rear GAW or GVW should be verified by weighing a completed, loaded vehicle.

Weigh front and rear of vehicle separately and combine for gross vehicle weight.

All three weights must be less than the respective maximums.

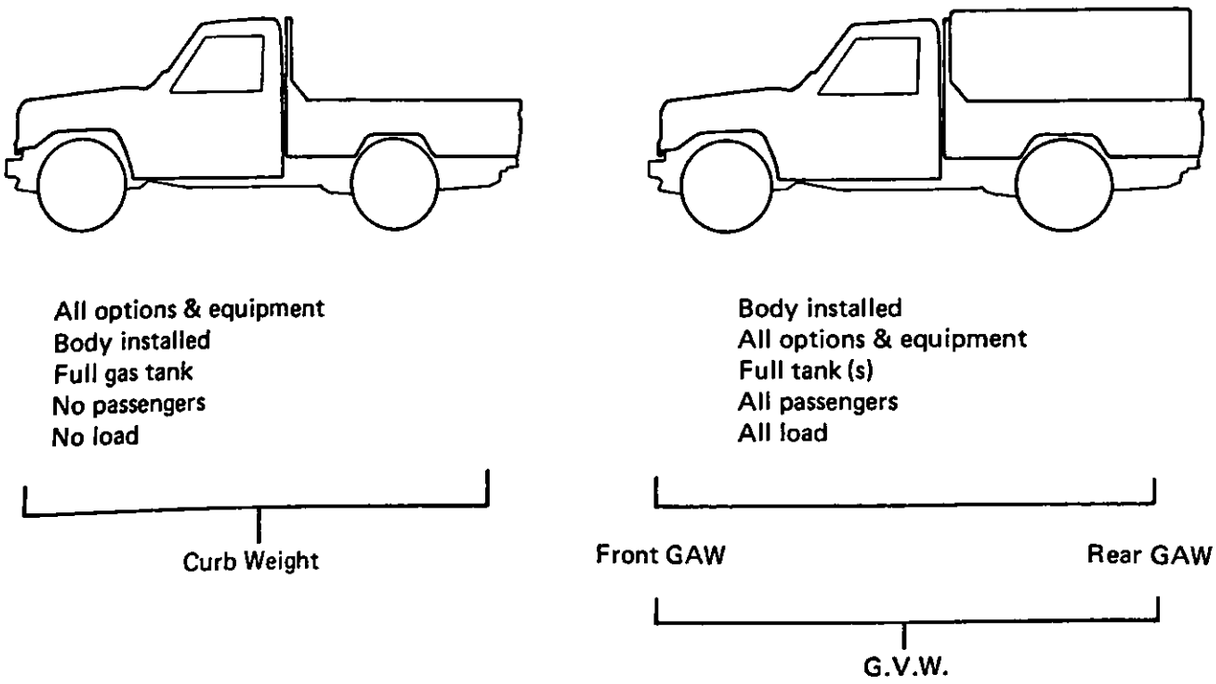

3. TIRE INFLATION

Tire inflation must be compatible with G.A.W and G.V.W.

The recommended tire inflation pressure are as follows:

	Model	Tire Size			Inflation Pressure kg/cm²	
		STD & OPT	Front	Rear	Front	Rear
Hard Top	BJ75$^{R}_{L}$V-KR	STD	7.50-16-8PR	7.50-16-8PR	2.4 (2.4)	3.5 (4.0)
	HJ75$^{R}_{L}$V-KR	OPT	7.50-16-6PR	7.50-16-8PR	1.8 (1.8)	3.5 (4.0)
	FJ75$^{R}_{L}$V-KR	OPT	7.00-16-8PR	7.00-16-8PR	2.4 (2.8)	4.25 (4.25)
	FJ75LV-MR					
	FJ75LV-MRV	STD	7.50-16-8PR	7.50-16-8PR	2.4 (2.4)	3.5 (4.0)
	HJ75RV-MRQ	OPT	7.50R16-8PR	7.50R16-8PR	*2.2 (2.4)	*3.9 (4.2)
	FJ75RV-MRQ					
	BJ75LV-MRW	STD	7.50-16-8PR	7.50-16-8PR	2.4 (2.4)	3.5 (4.0)
		OPT	205R16C-8PR	205R16C-8PR	2.0 (2.3)	4.5 (4.5)
Pickup	BJ75$^{R}_{L}$P-KR	STD	7.50-16-8PR	7.50-16-8PR	2.4 (2.4)	3.5 (4.0)
	HJ75$^{R}_{L}$P-KR	OPT	7.50-16-6PR	7.50-16-8PR	1.8 (1.8)	3.5 (4.0)
	HJ75LP-MR	OPT	7.00-16-8PR	7.00-16-8PR	2.4 (2.8)	4.25 (4.25)
	FJ75$^{R}_{L}$P-KR					
	FJ75LP-MR					
	FJ75LP-MRV	STD	7.50-16-8PR	7.50-16-8PR	2.4 (2.4)	3.5 (4.0)
		OPT	9.00-16-6PR	9.00-16-6PR		
	HJ75RP-MRQ	STD	7.50-16-8PR	7.50-16-8PR	2.4 (2.4)	3.5 (4.0)
		OPT	7.50R16-8PR	7.50R-16-8PR	2.2 (2.4)	3.9 (4.2)
	BJ75LP-MRW	STD	7.50-16-8PR	7.50-16-8PR	2.4 (2.4)	3.5 (4.0)
		OPT	205R16C-8PR	205R16C-8PR	2.0 (2.3)	4.5 (4.5)
	HJ75RP-MRN	STD	7.00-16-8PR	7.00-16-8PR	2.4 (2.8)	4.25 (4.25)
	FJ75RP-MRN					

*: HJ75RV-MRQ, FJ75RV-MRQ only
( ): Over 80 km/h (50 mph)

Model		Tire Size			Inflation Pressure kg/cm²	
		STD & OPT	Front	Rear	Front	Rear
Cab & Chassis Pickup	BJ75RP-KR3	STD	7.50-16-8PR	7.50-16-8PR	2.4 (2.4)	3.5 (4.0)
	BJ75RP-MR3	OPT	7.50-16-6PR	7.50-16-8PR	1.8 (1.8)	3.5 (4.0)
	HJ75RP-KR3	OPT	7.00-16-8PR	7.00-16-8PR	2.4 (2.8)	4.25 (4.25)
	FJ75 R/L P-KR3					
	FJ75 R/L P-MR3					
	HJ75RP-MRQ3	STD	7.50-16-8PR	7.50-16-8PR	2.4 (2.4)	3.5 (4.0)
	FJ75RP-MRQ3	OPT	7.50R16-8PR	7.50R16-8PR	2.2 (2.4)	3.9 (4.2)

( ): Over 80 km/h (50 mph)

Tire Inflation Pressure for Poor and Sand Roads

Destination	Tire Size	Inflation Pressure (kg/cm²)					
		Good Road (Less than 110 km/h)		Poor Road (Less than 50 km/h)		Sand (Less than 15 km/h)	
		Front	Rear	Front	Rear	Front	Rear
Middle East and General	9.00-16-6PR 9.00-15-6PR (Sand Tire)	2.1	2.8	1.75	2.8	1.05	2.45
	7.50R16-8PR (Sahara)	2.1	4.0	1.6	3.2	1.2	2.3

Note: Avoid driving 110 km/h or higher for the above tires.

4. HEIGHT OF CENTER OF GRAVITY

	Height of Center of Gravity (mm)
BJ75$^{R}_{L}$V-KR	May not Exceed 730
HJ75$^{R}_{L}$V-KR	730
FJ75$^{R}_{L}$V-KR	730
FJ75LV-MR	730
FJ75LV-MRV	730
HJ75RV-MRQ	730
FJ75RV-MRQ	730
BJ75LV-MRW	730
BJ75$^{R}_{L}$P-KR	730
HJ75$^{R}_{L}$P-KR	730
HJ75LP-MR	730
FJ75$^{R}_{L}$P-KR	730
FJ75LP-MR	730
FJ75LP-MRV	730
HJ75RP-MRQ	730
BJ75LP-MRW	730
HJ75RP-MRN	715
FJ75RP-MRN	715
BJ75RP-KR3	730
BJ75RP-MR3	730
HJ75RP-KR3	730
FJ75$^{R}_{L}$P-KR3	730
FJ75$^{R}_{L}$P-MR3	730
HJ75RP-MRQ3	730
FJ75RP-MRQ3	730

SECTION 5

1. DRAWINGS & DIMENSIONS

1-1. Completed Vehicle Drawings & Dimensions (1/20)

(1) VAN

MODEL
BJ75$^{R}_{L}$V-KR
HJ75$^{R}_{L}$V-KR
FJ75$^{R}_{L}$V-KR
FJ75LV-MR
FJ75LV-MRV
HJ75RV-MRQ
FJ75RV-MRQ
BJ75LV-MRW

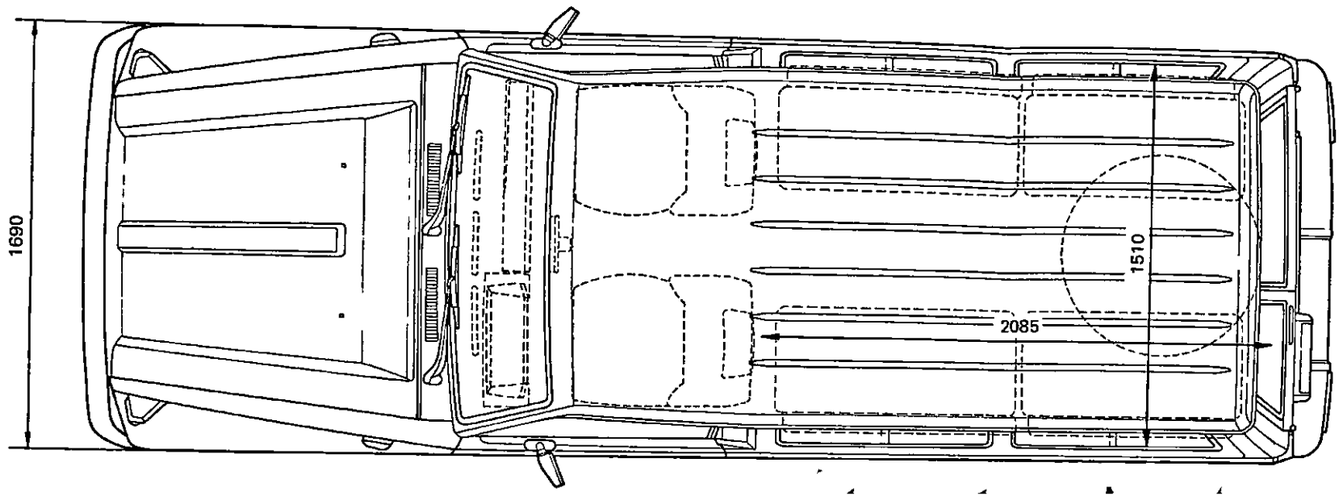

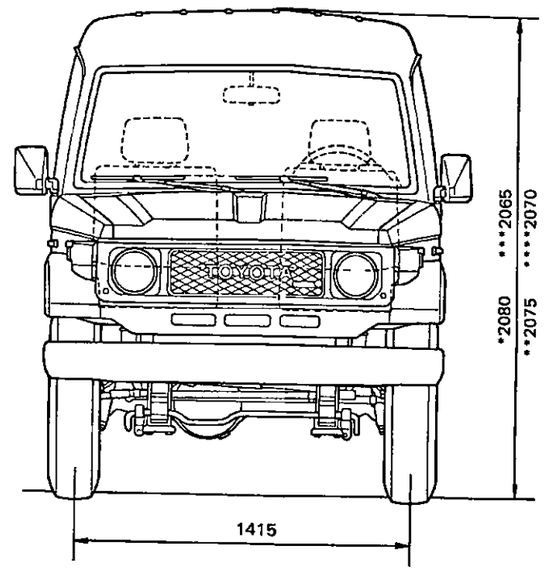

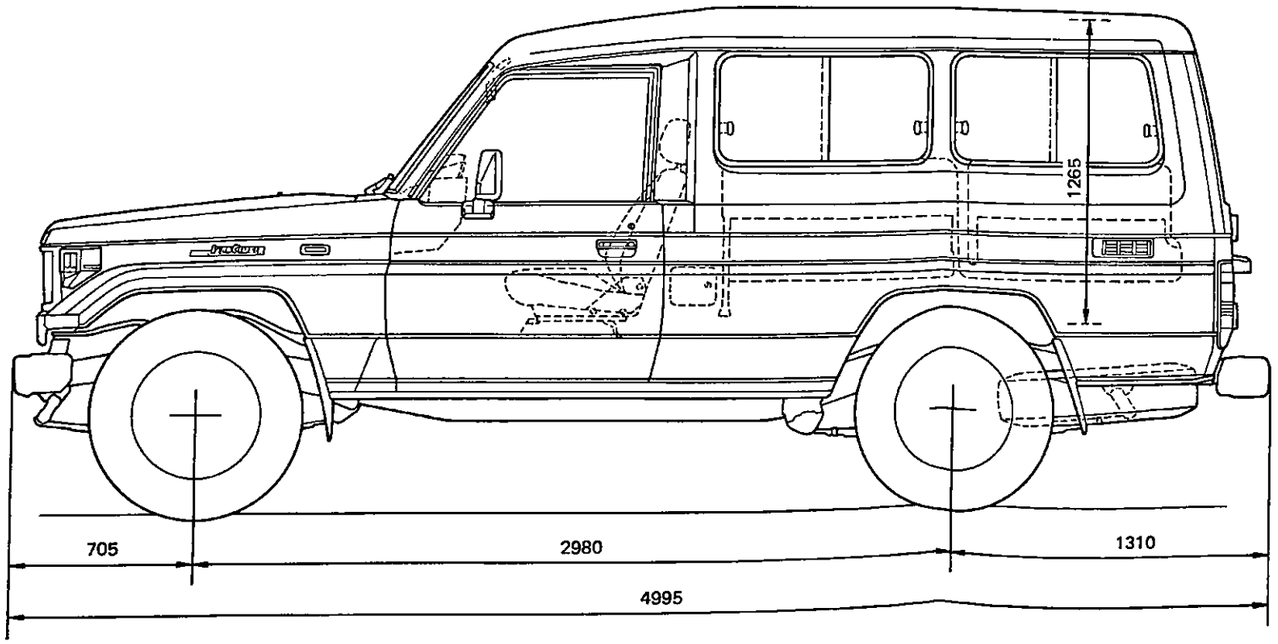

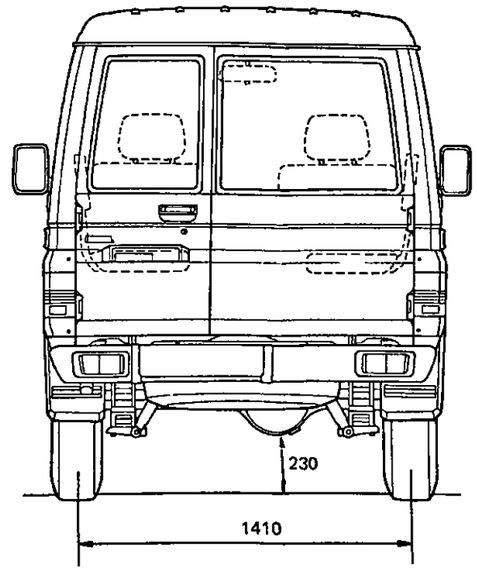

*FJ Series ***FJ75LV-MRV
**BJ & HJ Series ****HJ75RV-MRQ, FJ75RV-MRQ

(2) PICKUP

MODEL
BJ75$^{R}_{L}$P-KR
HJ75$^{R}_{L}$P-KR
HJ75LP-MR
FJ75$^{R}_{L}$P-KR
FJ75LP-MR
FJ75LP-MRV
HJ75RP-MRQ
BJ75LP-MRW

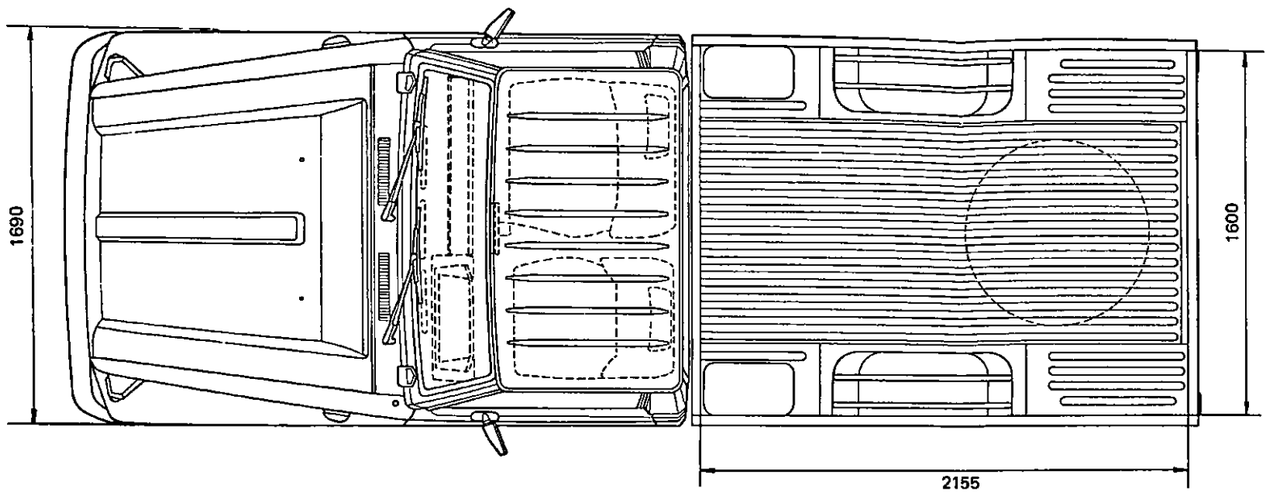

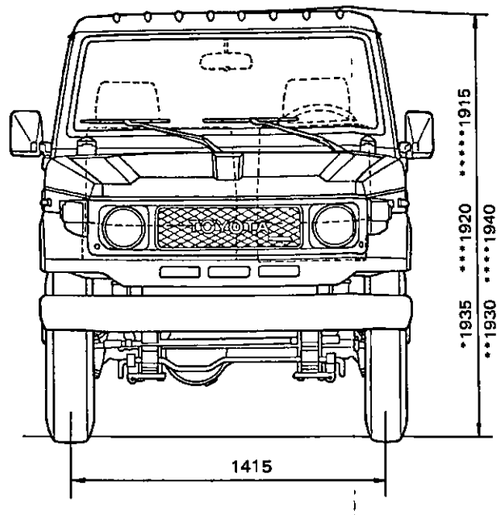

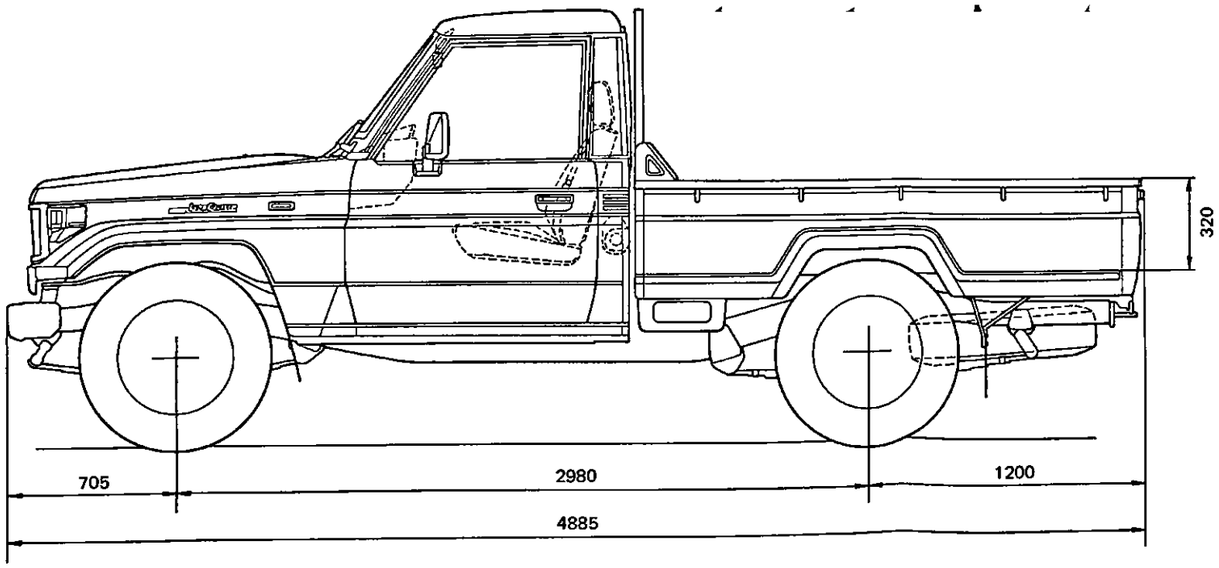

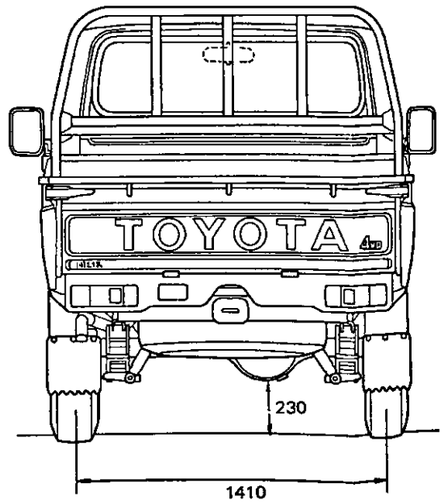

*FJ & BJ Series
**HJ Series
***FJ75LP-MRV
****HJ75RP-MRQ, FJ75RP-MRN
***** HJ75RP-MRN

1-2. Cab & Chassis Drawings & Dimensions (1/20)

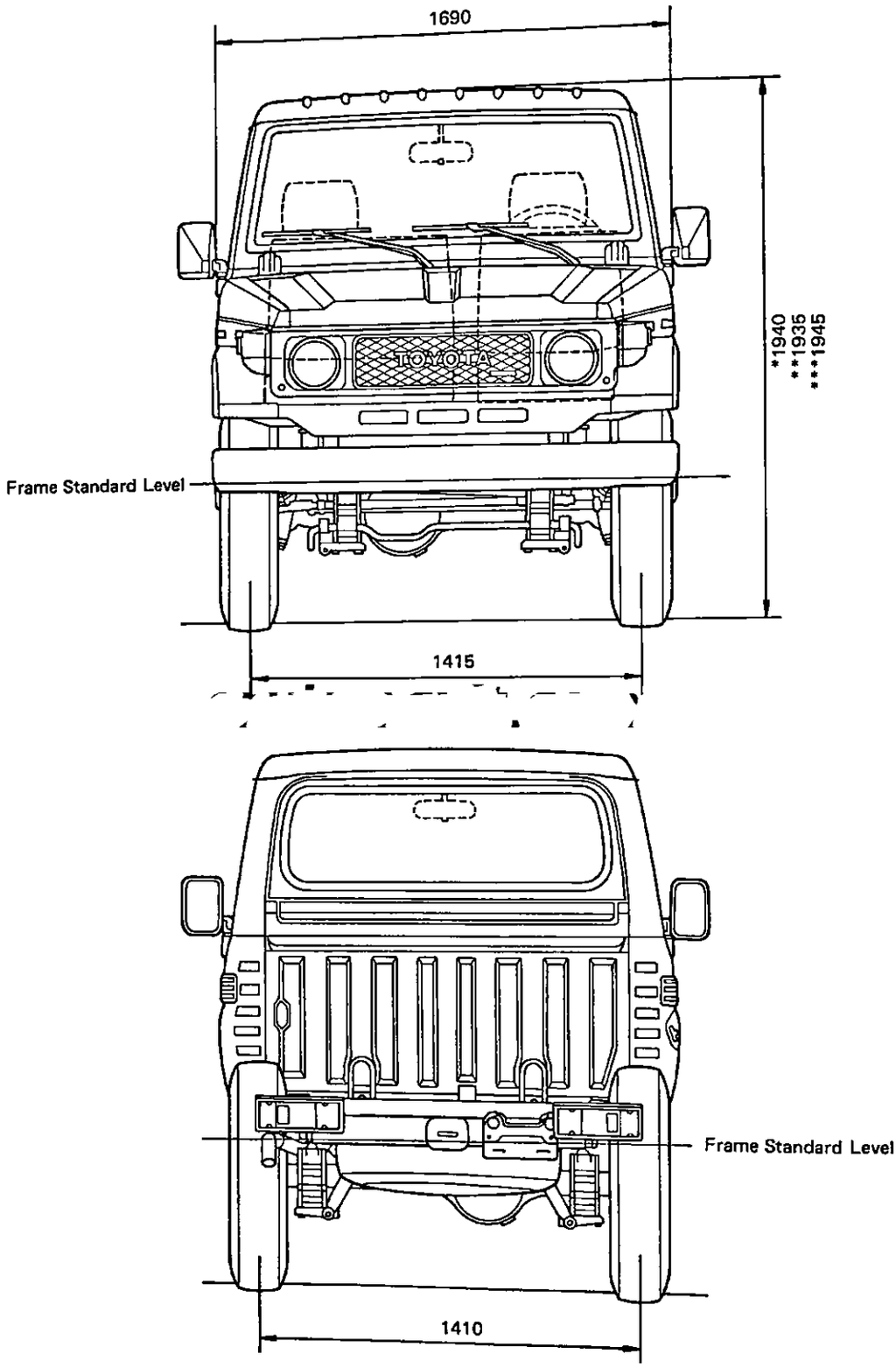

*FJ & BJ Series
**HJ Series
***FJ75RP-MRQ3

MODEL
BJ75RP-KR3
BJ75RP-MR3

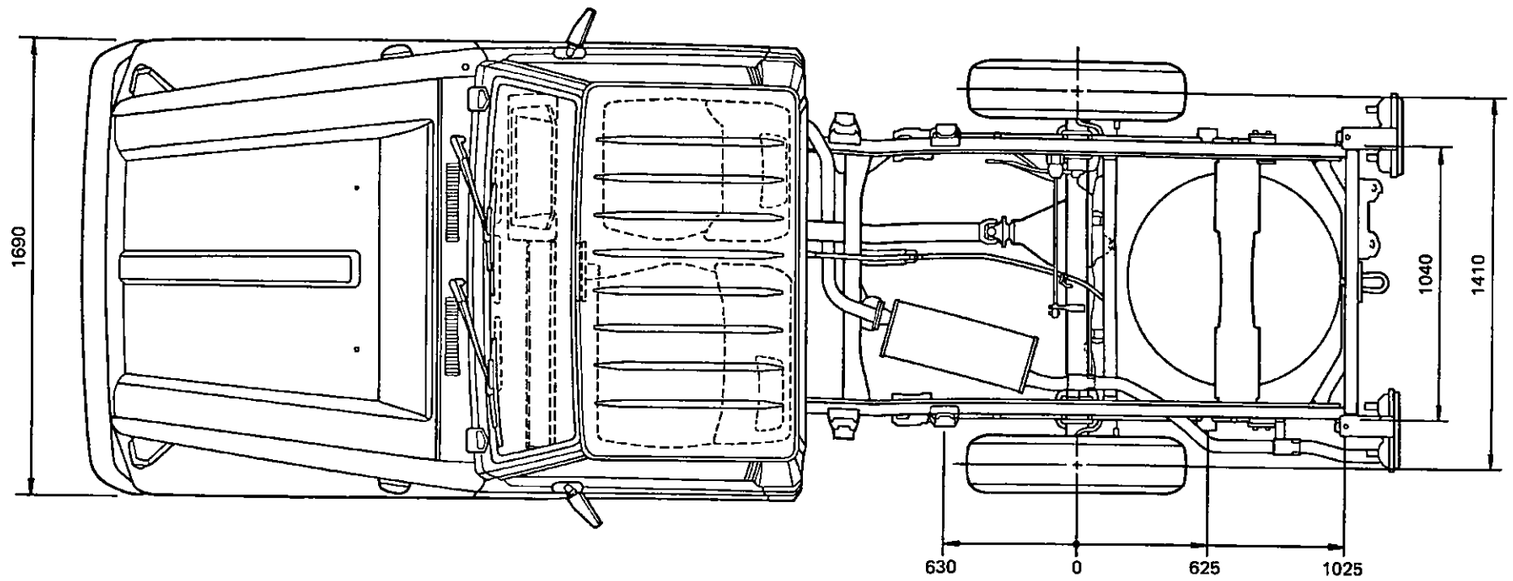

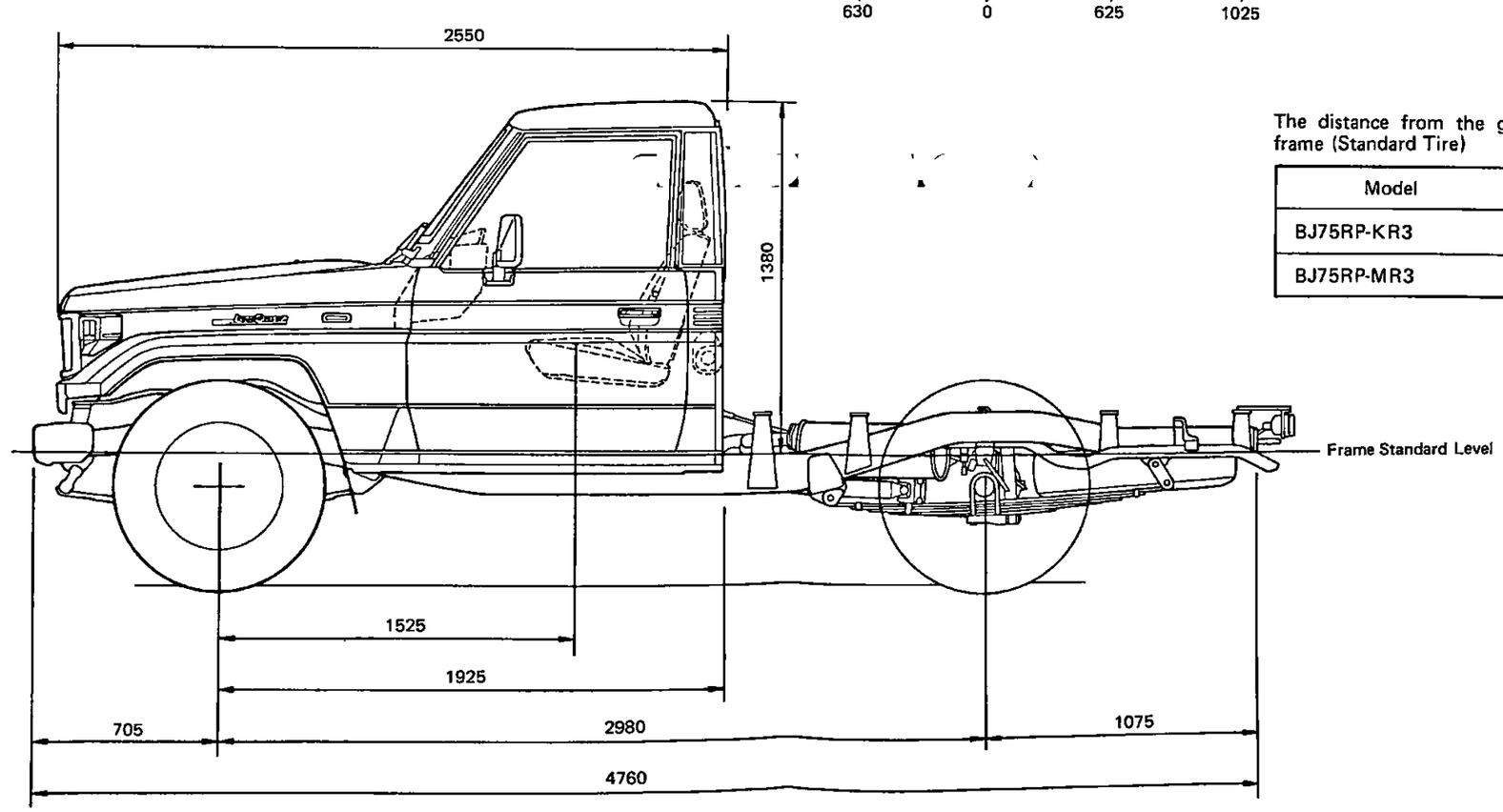

The distance from the ground to the upper side of the frame (Standard Tire)

Model	Cab Back	Rear Axle
BJ75RP-KR3	205	375
BJ75RP-MR3	205	375

MODEL
HJ75RP-KR3
HJ75RP-MRQ3
FJ75$^{R}_{L}$P-KR3
FJ75$^{R}_{L}$P-MR3

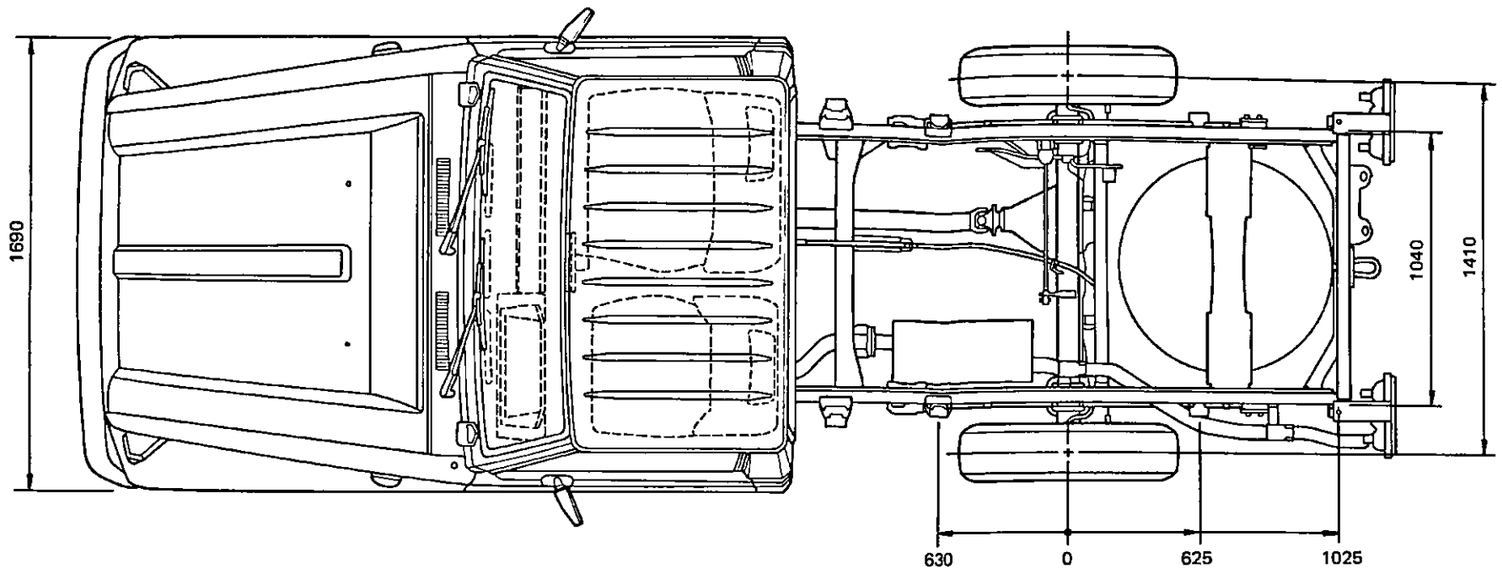

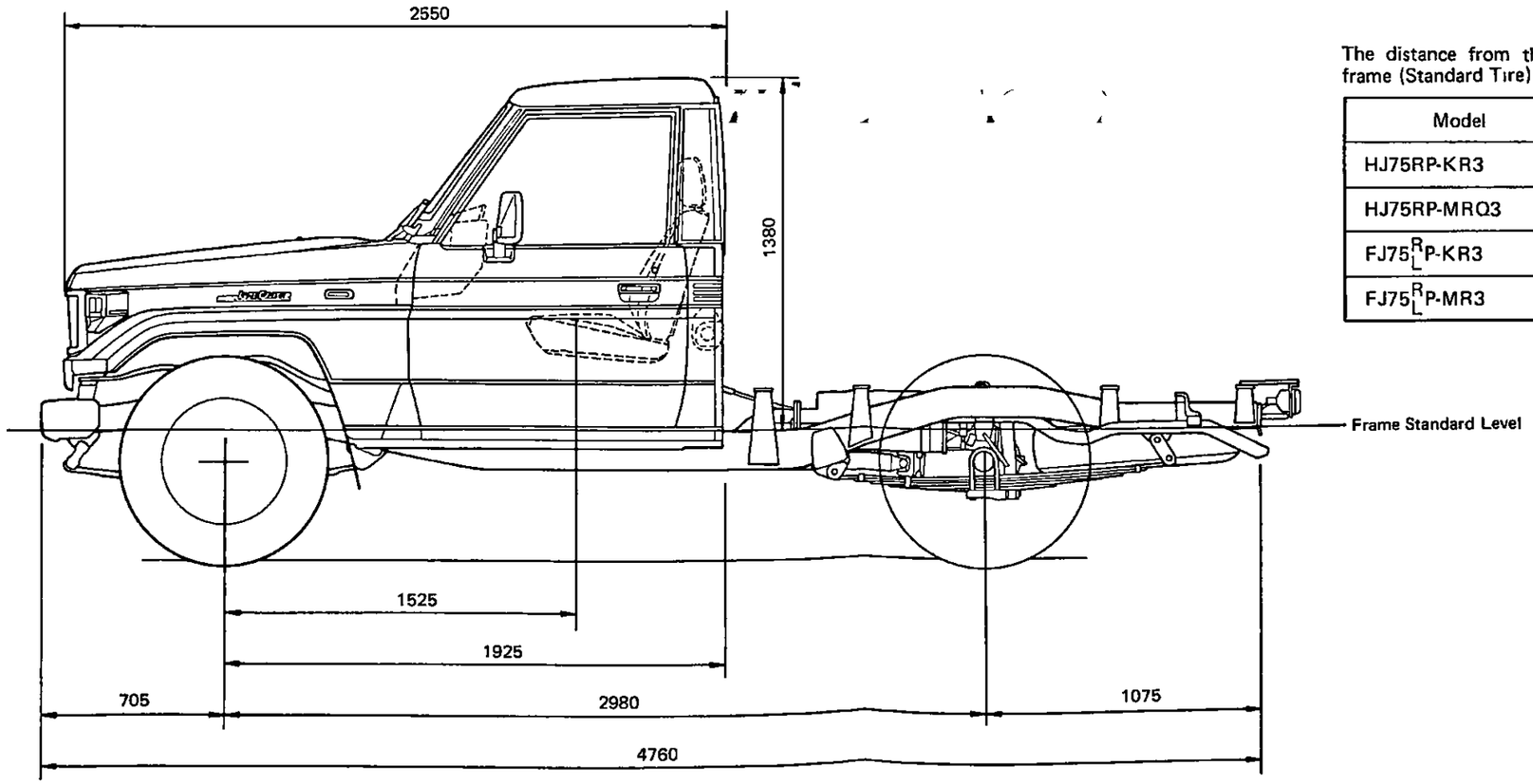

The distance from the ground to the upper side of the frame (Standard Tire)

Model	Cab Back	Rear Axle
HJ75RP-KR3	205	375
HJ75RP-MRQ3	205	375
FJ75$^{R}_{L}$P-KR3	205	375
FJ75$^{R}_{L}$P-MR3	205	375

MODEL
FJ75$^{R}_{L}$P-KR3
FJ75$^{R}_{L}$P-MR3
HJ75RP-KR3
HJ75RP-MR3
w/Fuel Sub Tank

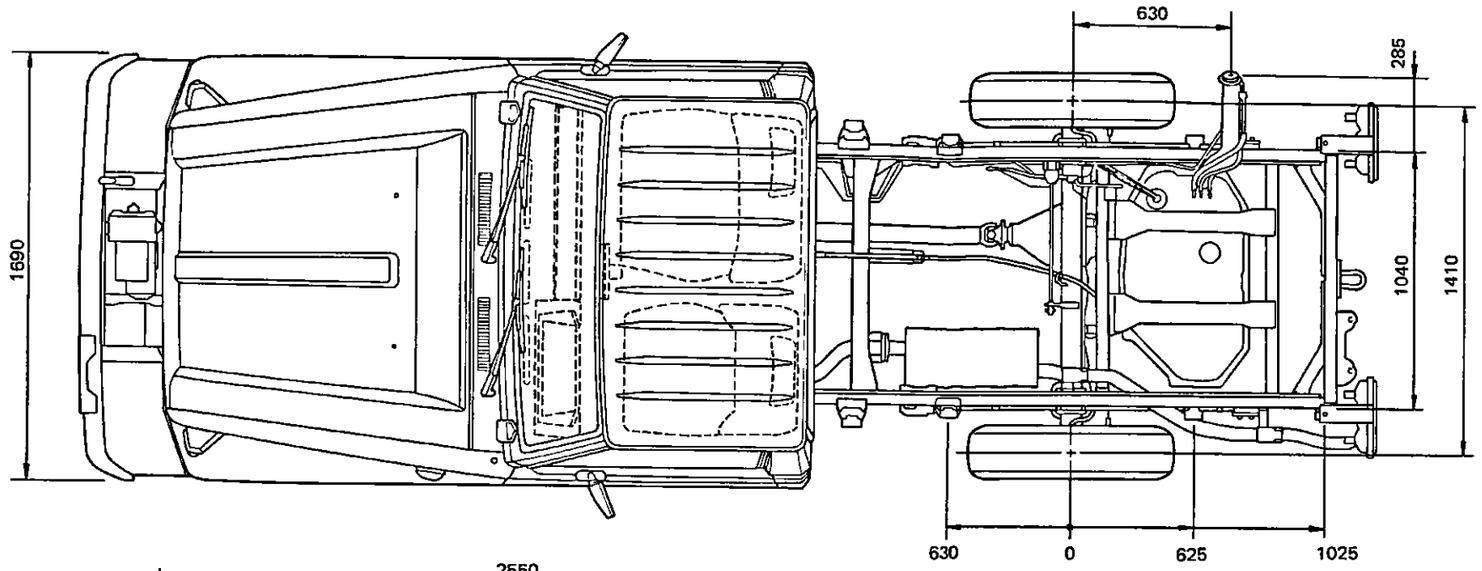

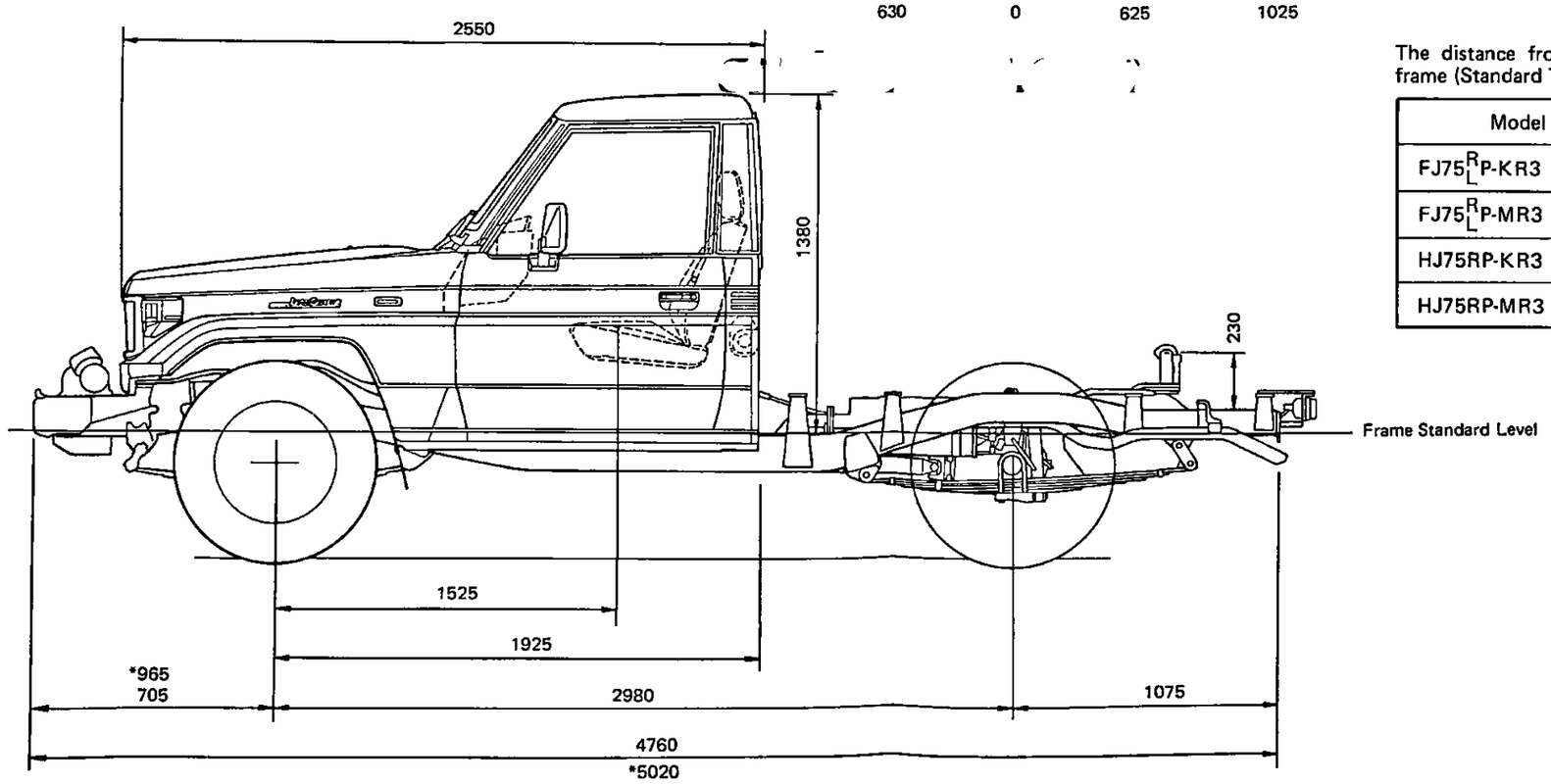

The distance from the ground to the upper side of the frame (Standard Tire)

Model	Cab Back	Rear Axle
FJ75$^{R}_{L}$P-KR3	210	380
FJ75$^{R}_{L}$P-MR3	210	380
HJ75RP-KR3	210	380
HJ75RP-MR3	210	380

*w/ winch

1-3. Pre-cleaner & Snorkel Air-cleaner Related Charts

MODEL
FJ75$^{R}_{L}$V-KR
FJ75LV-MR
BJ75$^{R}_{L}$V-KR
HJ75$^{R}_{L}$V-KR
FJ75LV-MRV
HJ75RV-MRQ
FJ75RV-MRQ

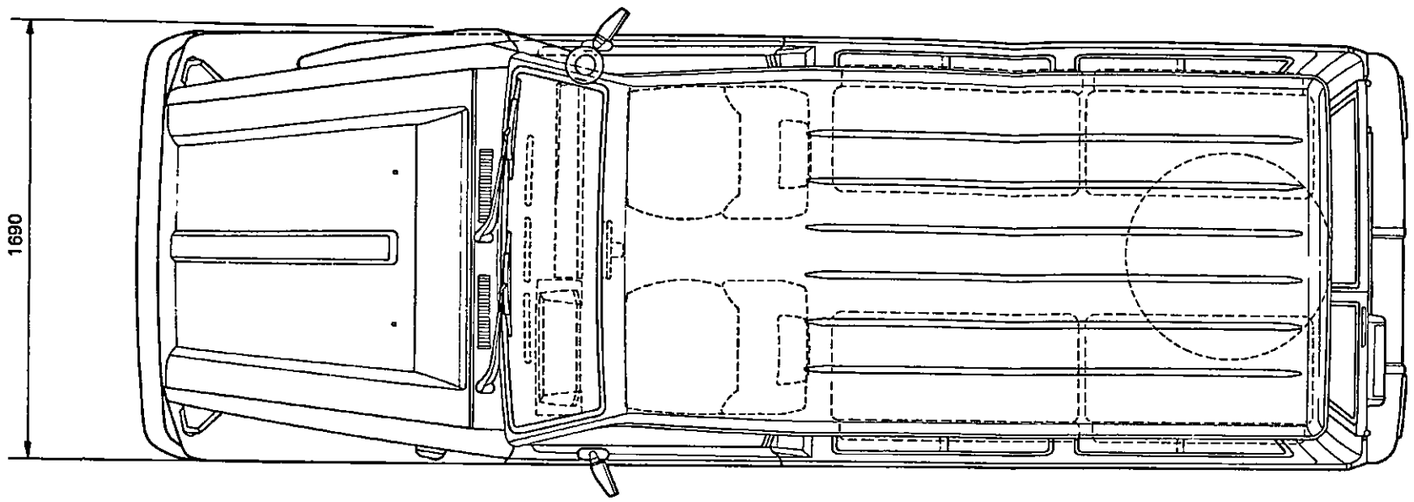

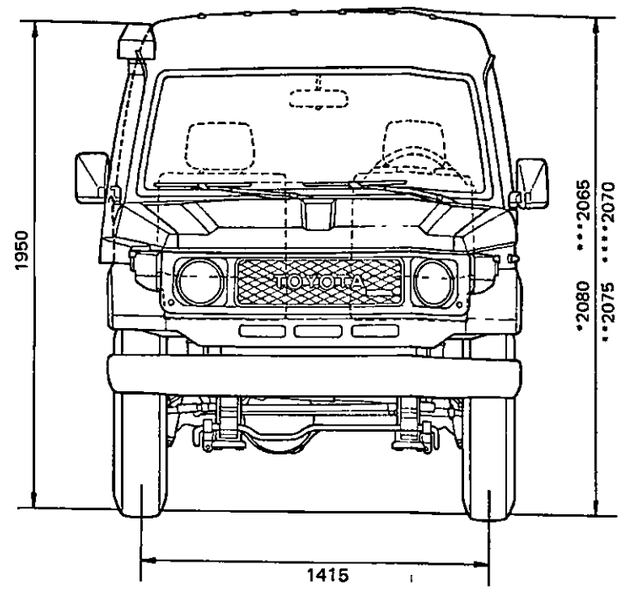

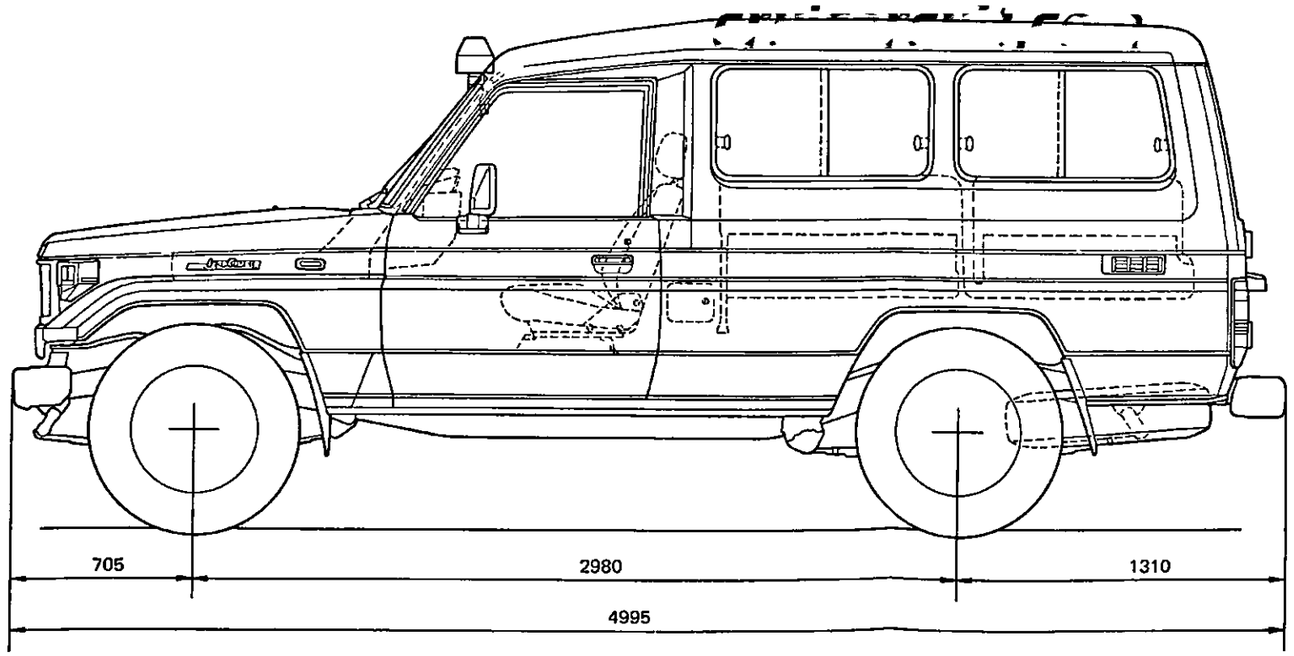

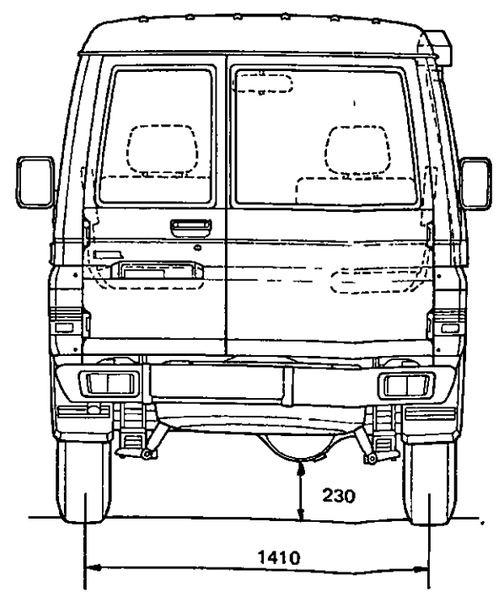

*FJ Series
**BJ & HJ Series
***FJ75LV-MRV
****HJ75RV-MRQ, FJ75RV-MRQ

MODEL
BJ75$^{R}_{L}$P-KR
HJ75$^{R}_{L}$P-KR
HJ75LP-MR
FJ75$^{R}_{L}$P-KR
FJ75LP-MR
FJ75LP-MRV
HJ75RP-MRQ

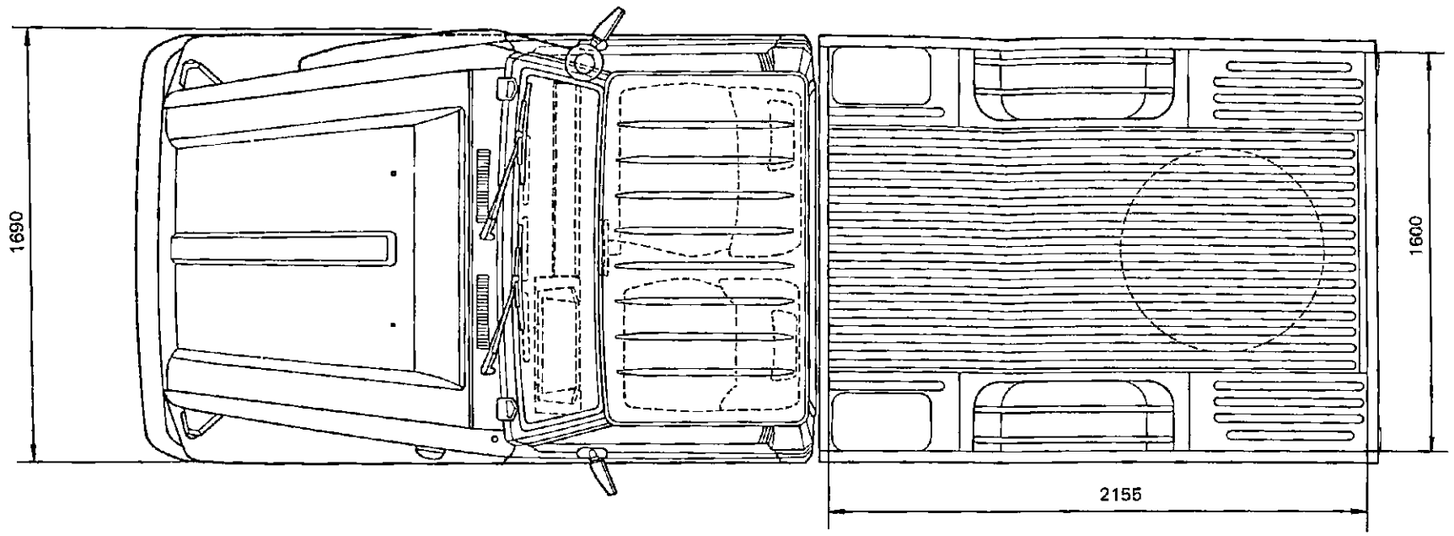

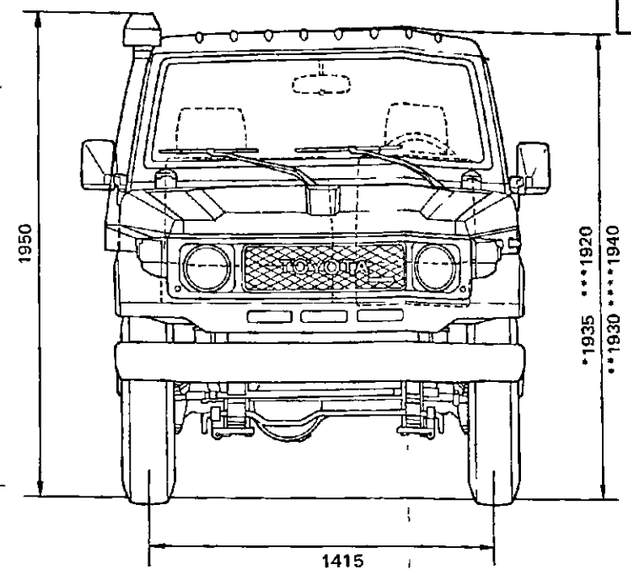

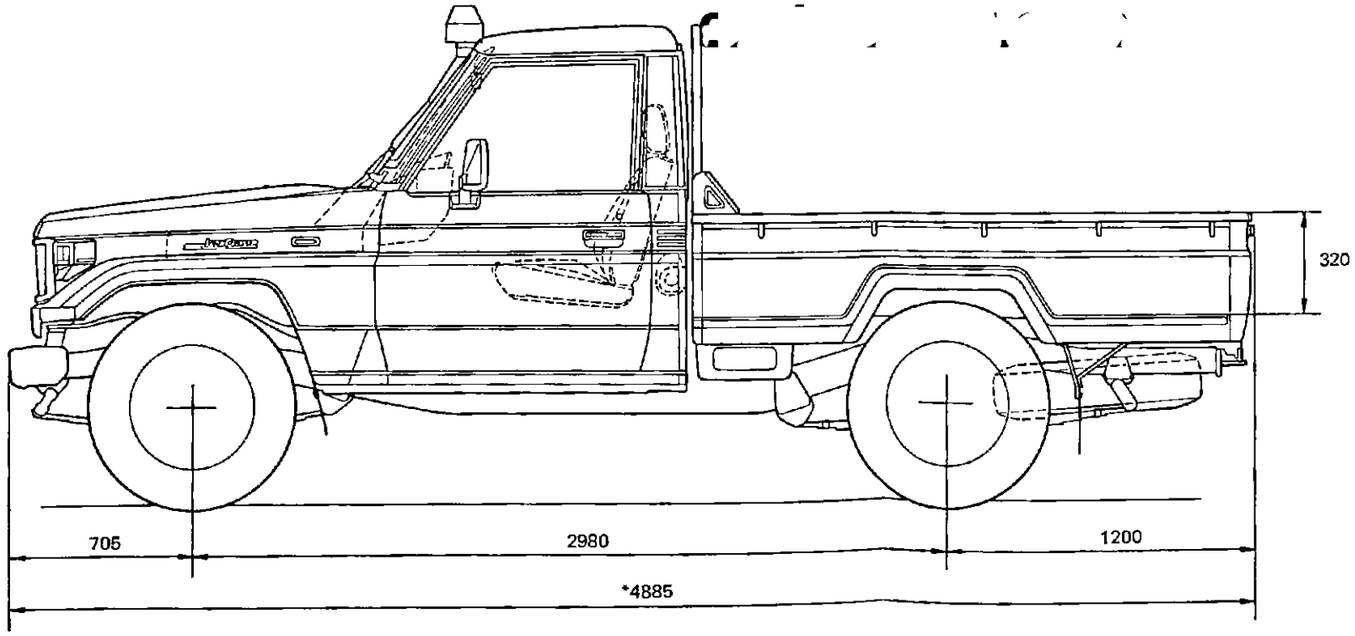

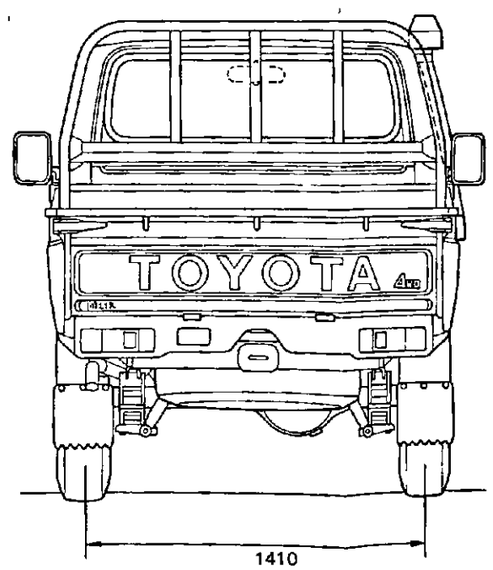

*FJ & BJ Series ****HJ75RP-MRQ,
**HJ Series
***FJ75LP-MRV

2. EXHAUST PIPE DRAWINGS

MODEL
FJ75 Series
HJ75 Series

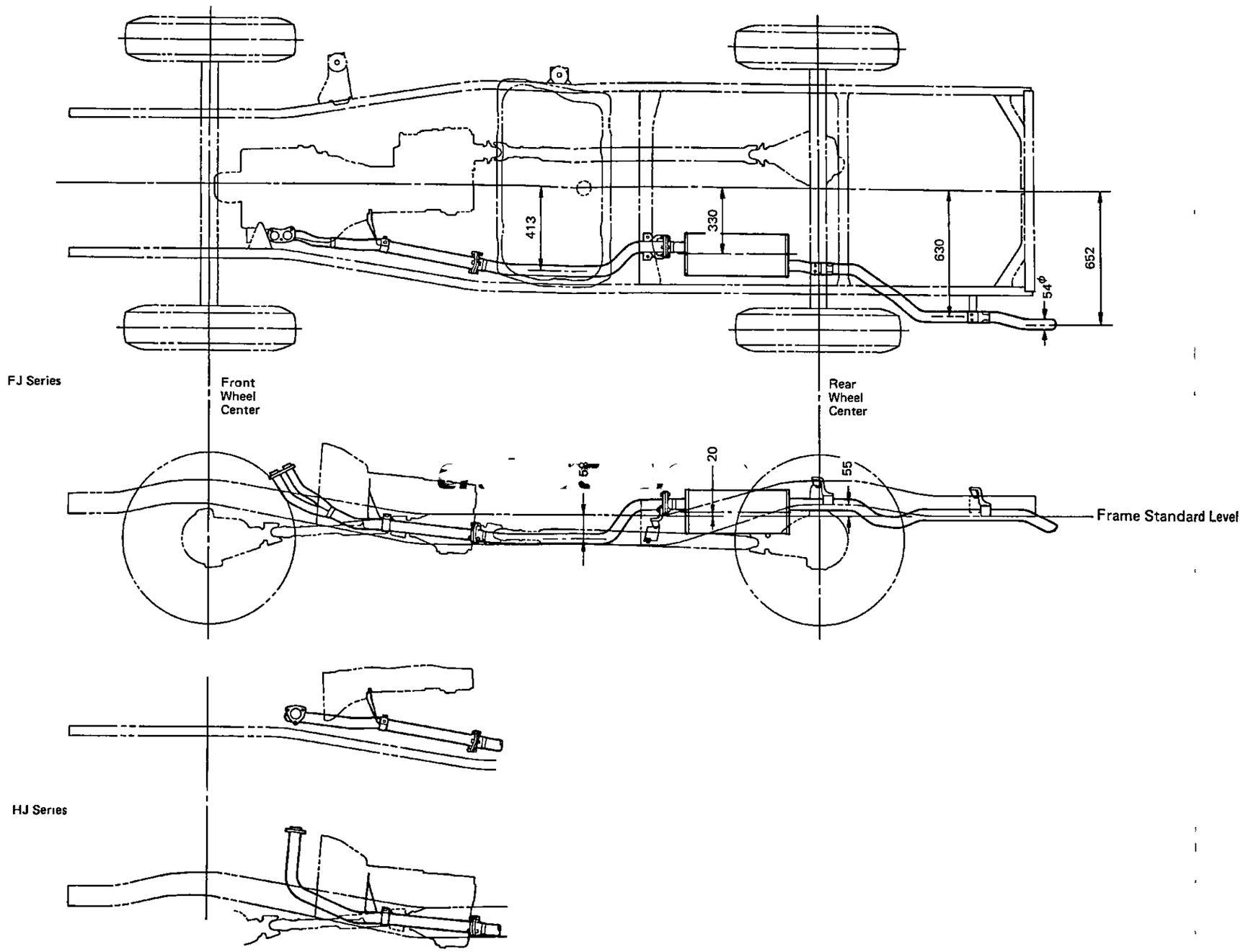

BJ Series

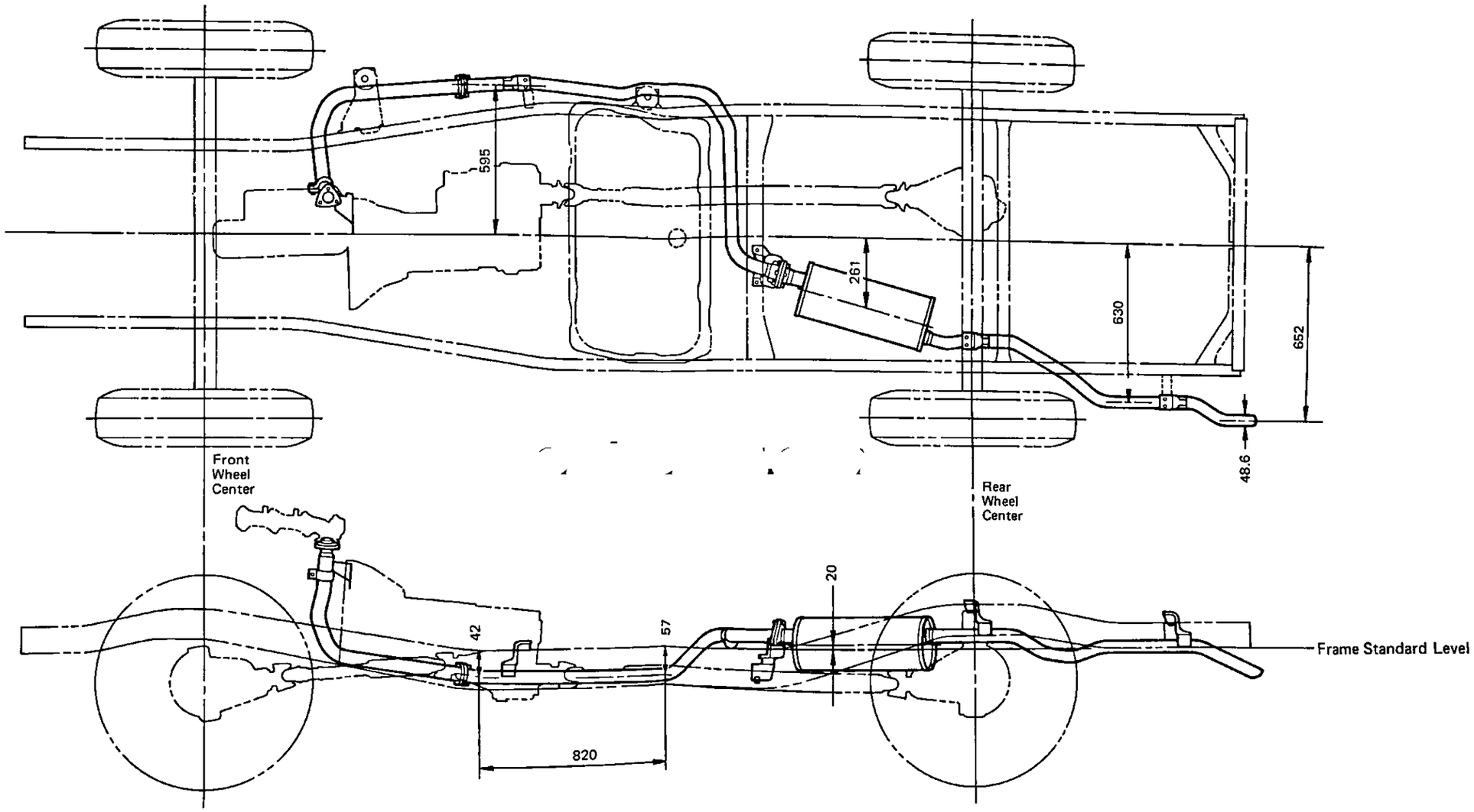
595
261
630
652
48.6
Front
Wheel
Center
Rear
Wheel
Center
20
42
57
820
Frame Standard Level

3. PTO-RELATED CHARTS

3-1. P.T.O Availability

	Option	Set Option (w/winch)	
Model	HJ75$^{R}_{L}$V-KR HJ75RP-KR HJ75RP-KR3 HJ75LP-KR HJ75LP-MR BJ75LV-MRW BJ75LP-MRW	FJ75$^{R}_{L}$V-KR FJ75LV-MR BJ75$^{R}_{L}$V-KR HJ75$^{R}_{L}$V-KR FJ75$^{R}_{L}$P-KR FJ75LP-MR FJ75RP-MRN BJ75$^{R}_{L}$P-KR HJ75$^{R}_{L}$P-KR HJ75LP-MR HJ75RP-MRN FJ75LV-MRV FJ75LP-MRV BJ75LV-MRW BJ75LP-MRW	FJ75$^{R}_{L}$P-KR3 FJ75$^{R}_{L}$P-MR3 BJ75RP-KR3 BJ75RP-MR3 HJ75RP-KR3
Transmission	H41 & H55F	H41 & H55F	
P.T.O. Part No.	36610-60080	36610-60080	
P.T.O. Max Torque	14 kg·m	14 kg·m	

3-2. P.T.O Gear Specifications

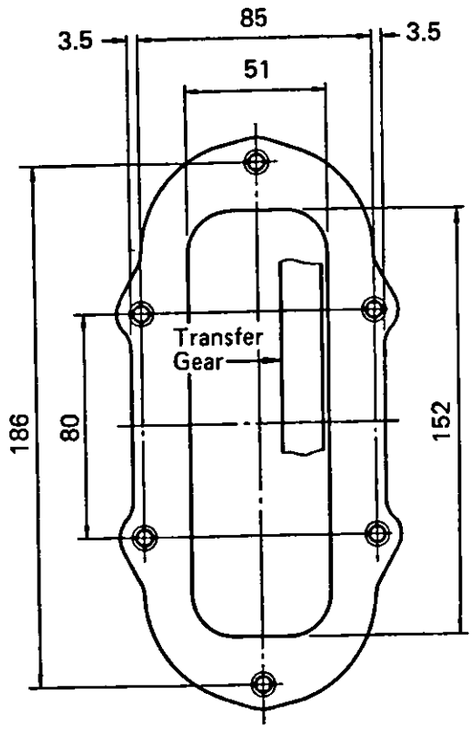

Power Take Off Gear	T/F P.T.O Gear
Tooth Shape	Spur Gear
Normal Pressure Angle	20°
Tooth Module	3.629
Standard Pitch Diameter	112.485ϕ
Diameter	119.7ϕ
Base Diameter	105.71ϕ
Torsional Angle	–
Torsional Direction	–
Number of Teeth	31
Tooth Width	15

3-3. Engine Center and T/M Combination

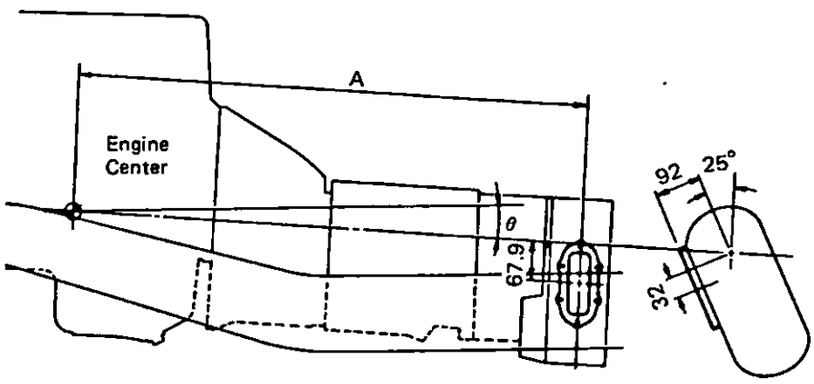

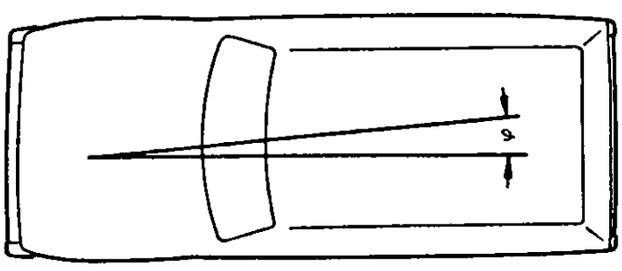

Item	FJ Series	BJ Series	HJ Series
A mm	1010.5	962.5	1004
θ Degress	2°	2°30′	2°30′
φ Degress	2°30′	4°15′	3°40′

3-4. P.T.O Controll Lever Related Charts (Option)

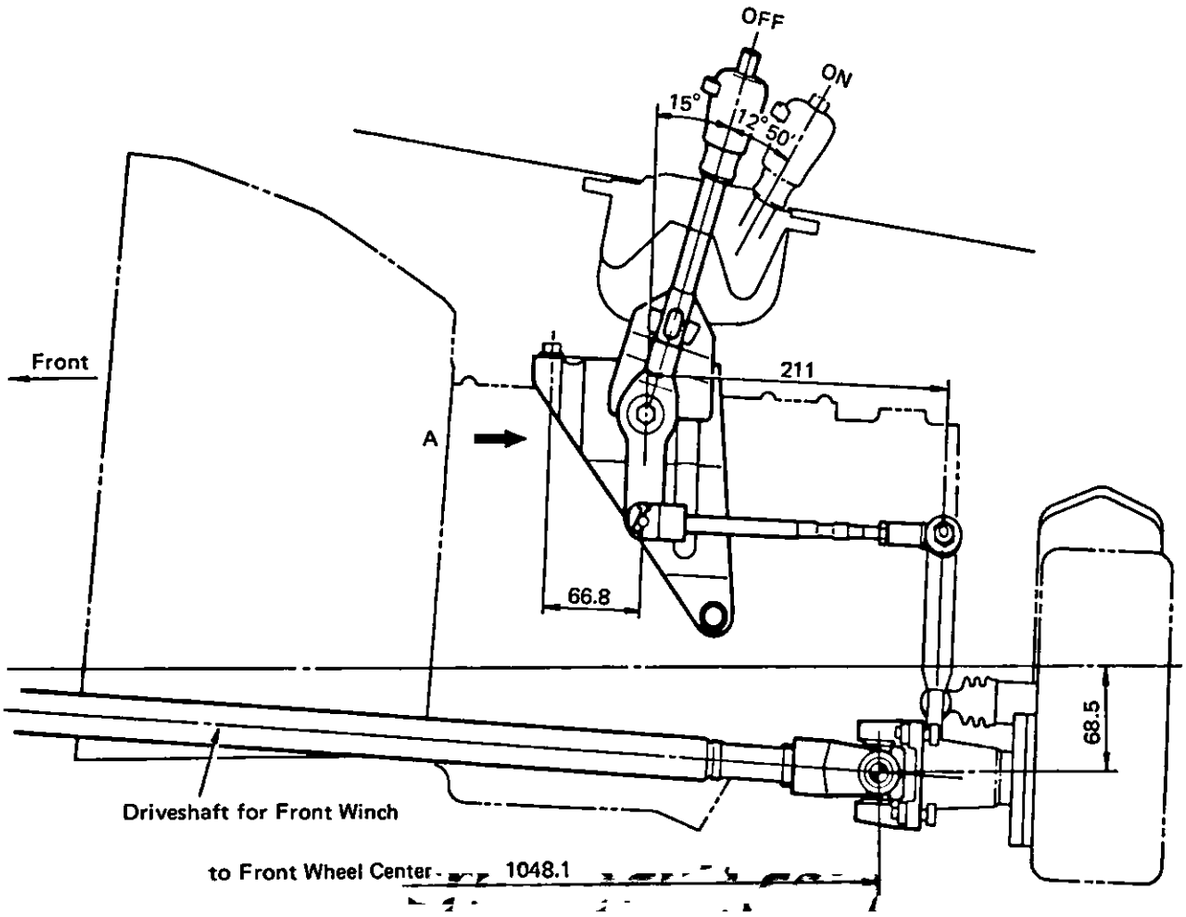

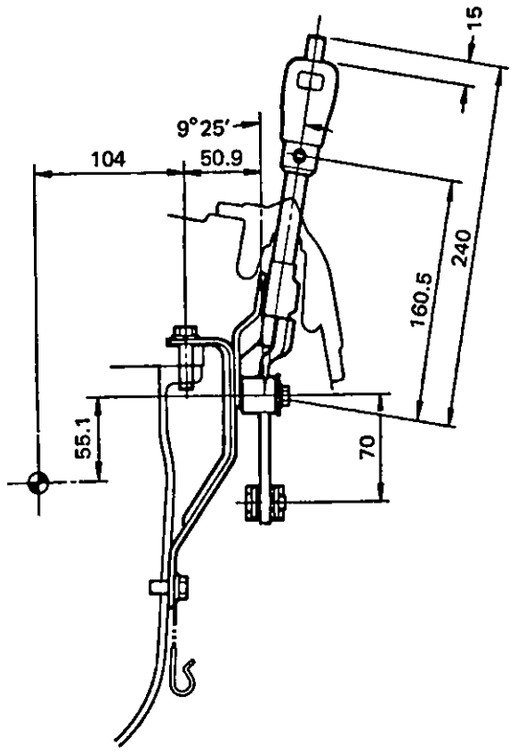

A View

3-5. Side P.T.O for Land Cruiser (Option)

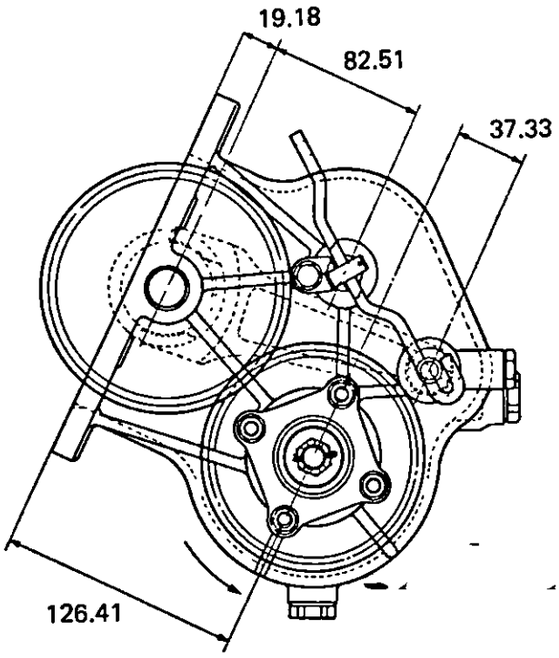

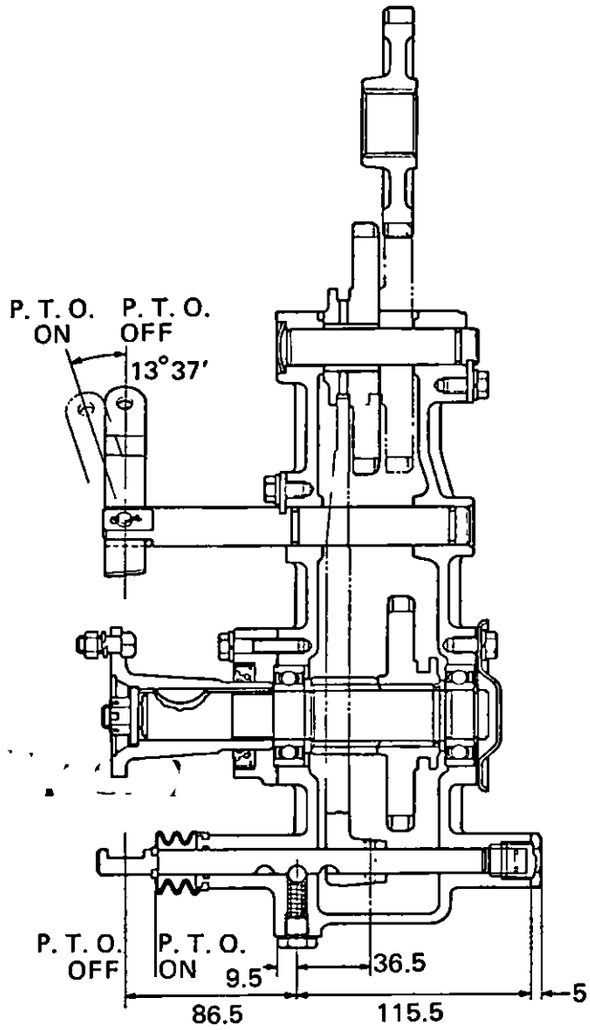

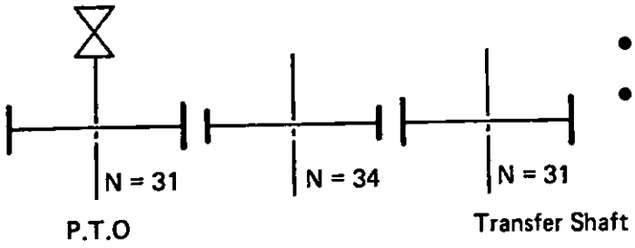

- Reduction Gear Ratio: 34/31 x 31/34 = 1.000
- Permissible Torque = 14 kg·m

4. TIRE AND DIFFERENTIAL BOUNDING LIMITS

The tire limit under poorest road condition is as shown below.

MODEL
All Models

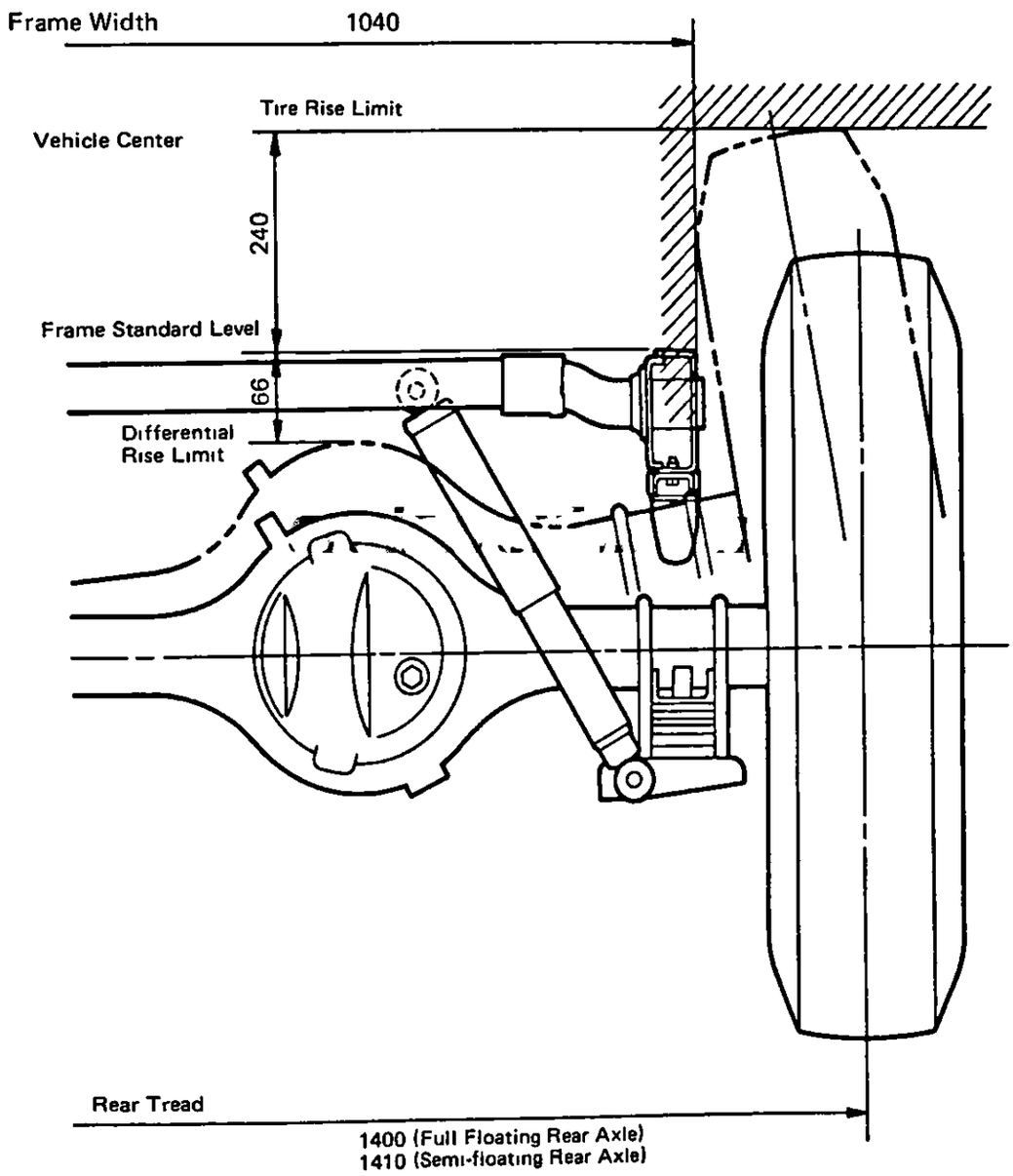

5. SPRING CHARACTERISTIC CURVE

5-1. Front Spring Performance Curve

(Loading weight and spring rate on one side)

MODEL
All Models

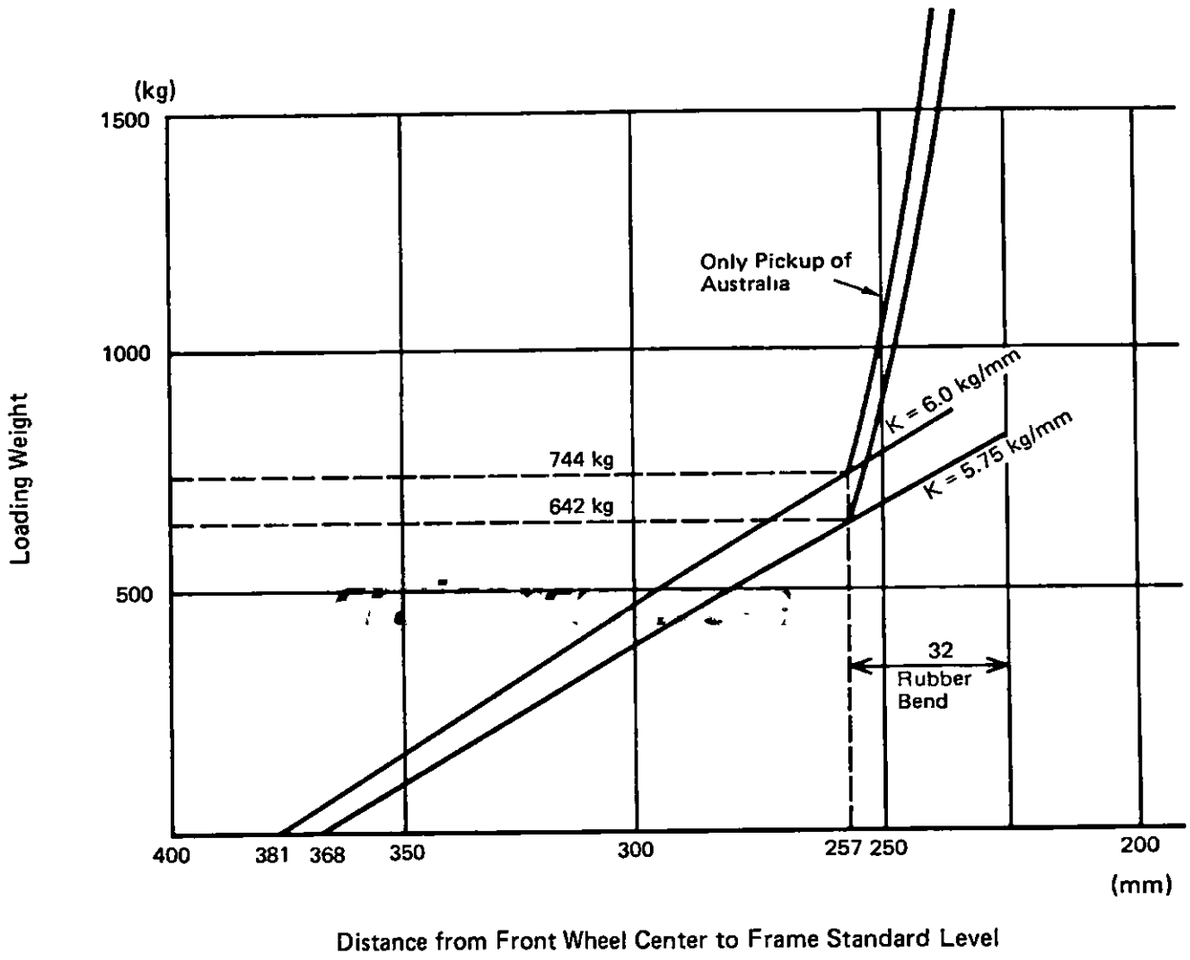

5-2. Rear Leaf Spring Performance Curve

(Loading weight and spring rate on one side)

MODEL
All Models

Standard Spring

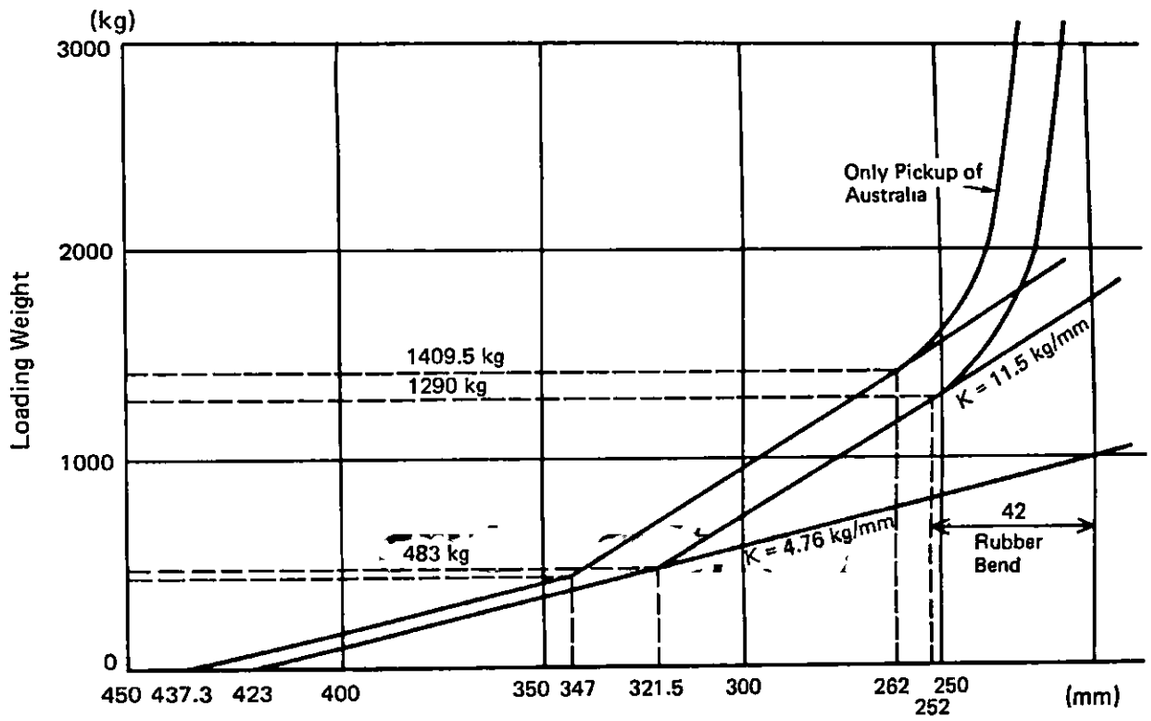

Distance from Front Wheel Center to Frame Standard Level

Heavy Duty Spring (Option for Pickup Series)

MODEL
General & Middle East

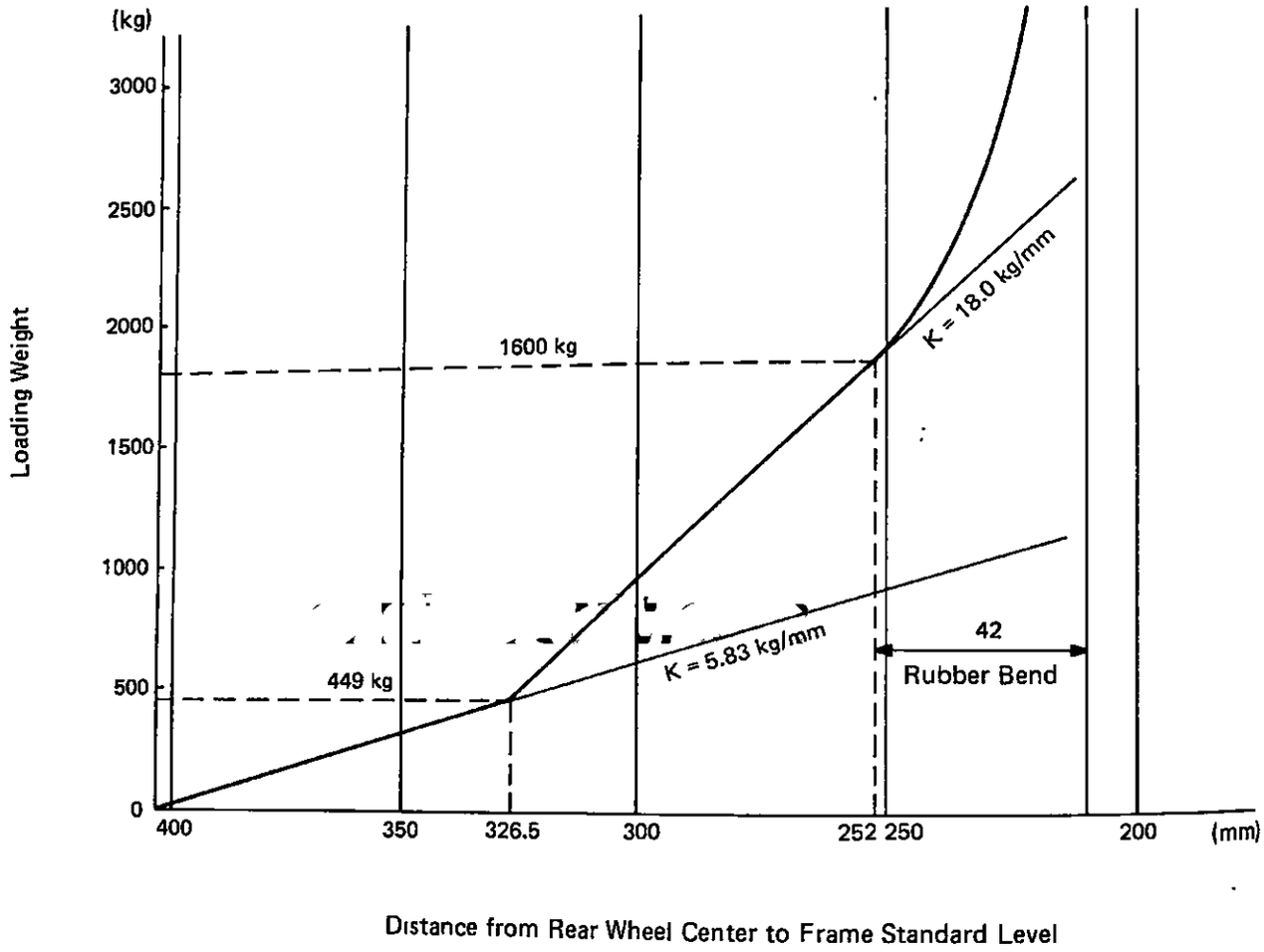

6. FRAME DRAWINGS (1/20)

Note: In the frame drawing, the engine mounting bracket should be changed by the mounted engine.

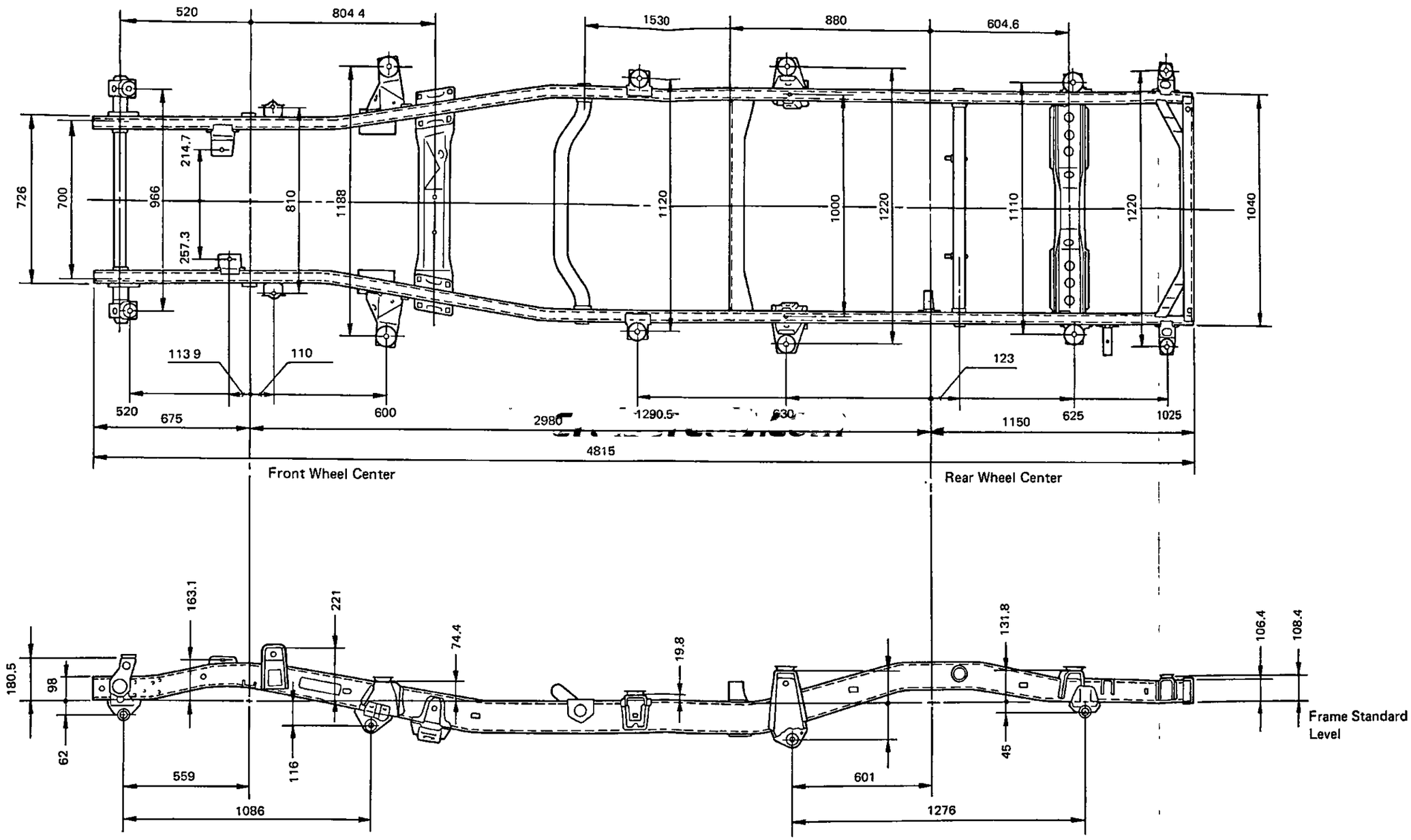

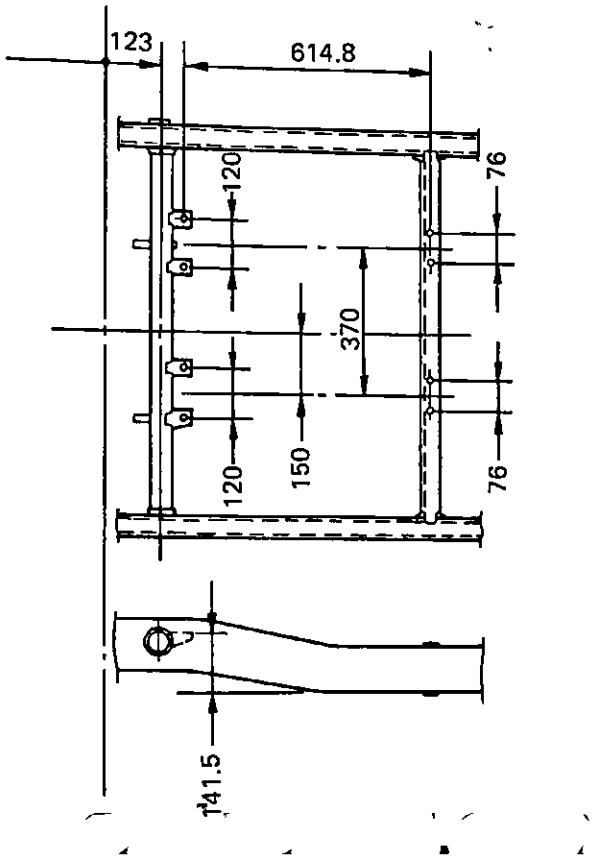

The Detailed Illustration of The Frame Part for Sub-fuel Tank Installation

7. FUEL TANK INSTALLATION RELATED DRAWINGS (Drawings for optional fuel tank)

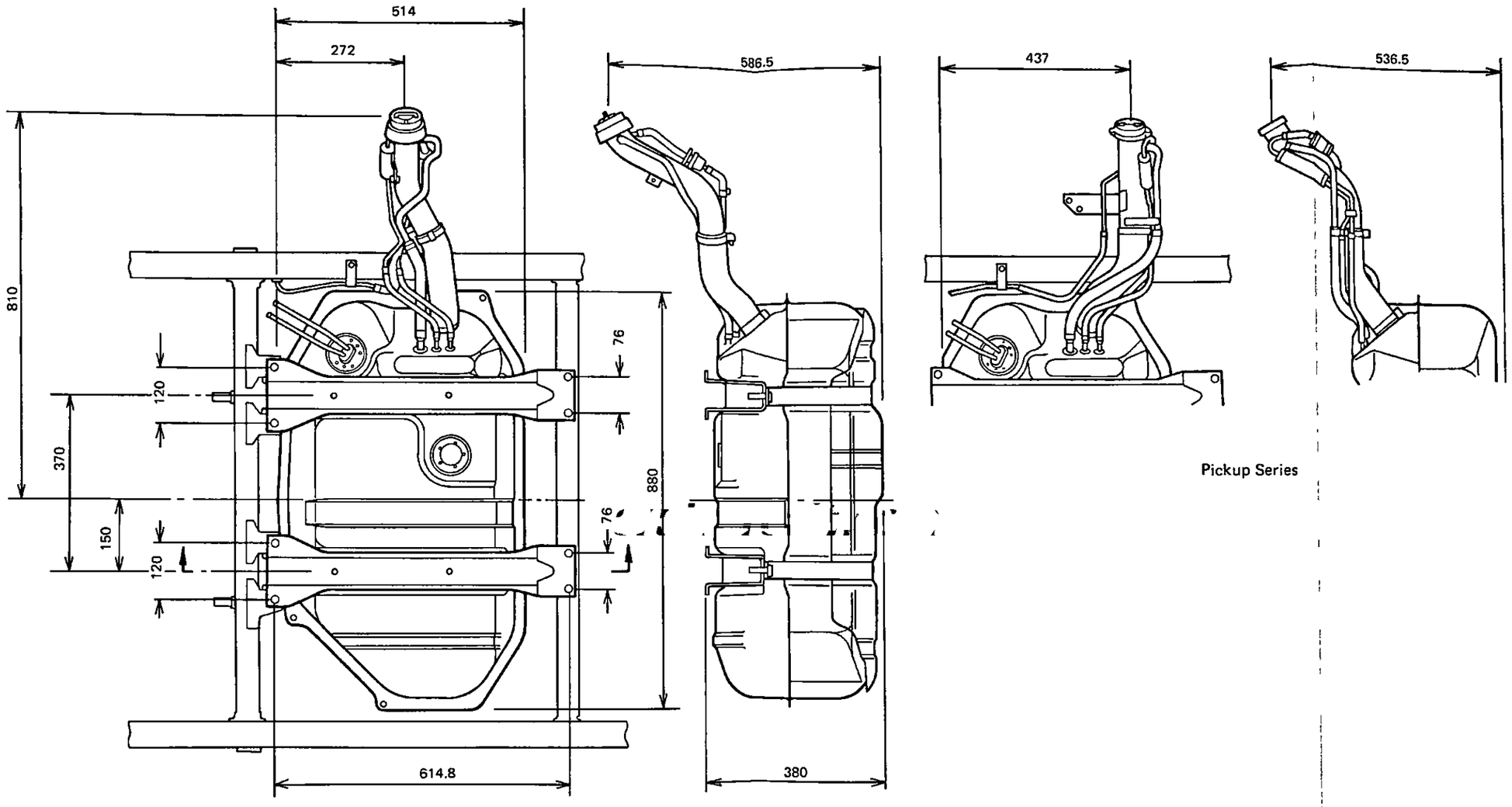

Pickup Series

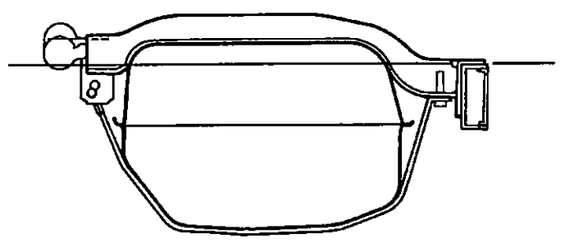

Van Series

8. REAR COMBINATION LAMP RELATED CHART

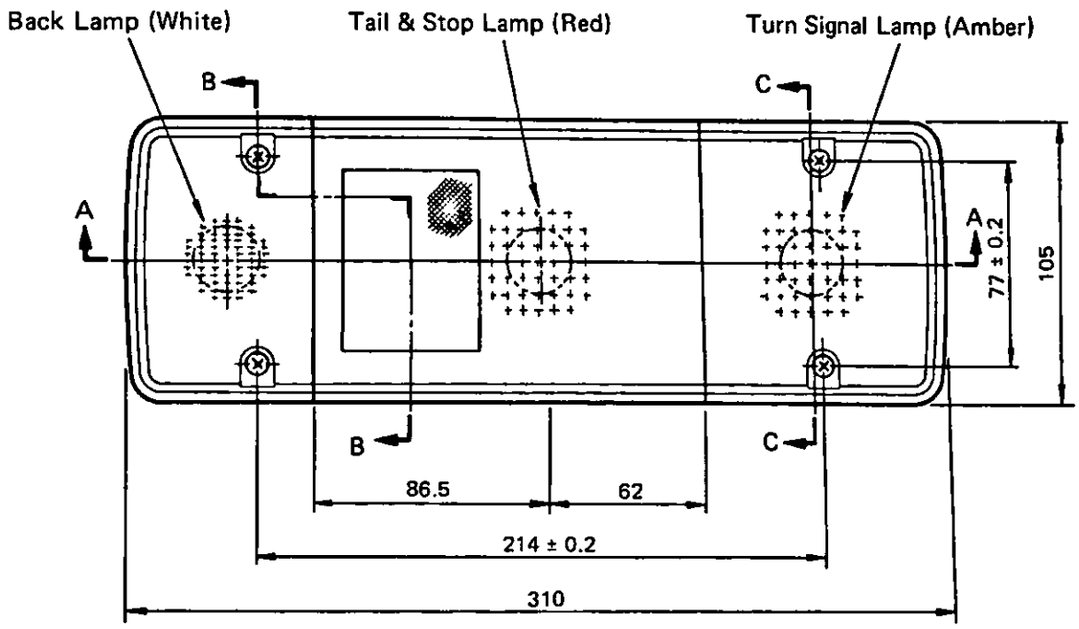

A-A Section

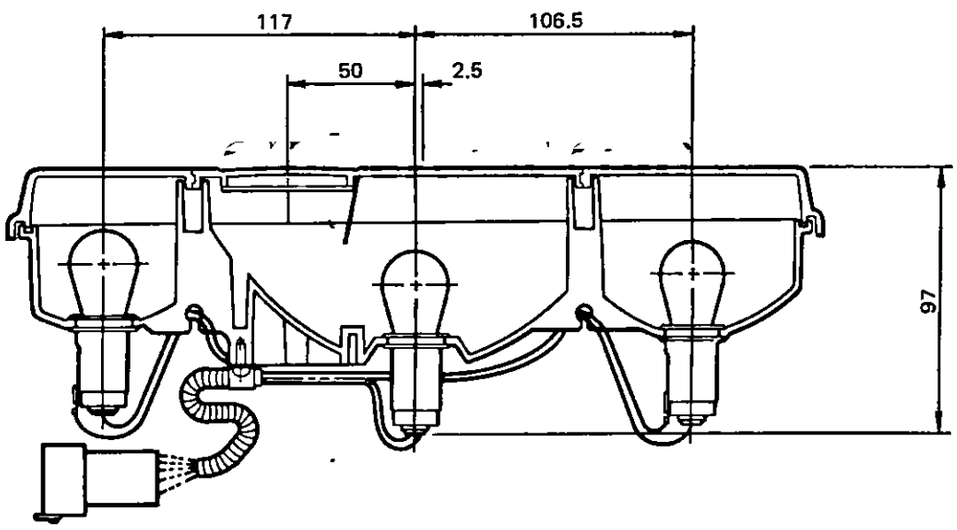

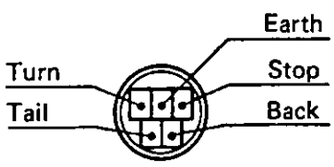

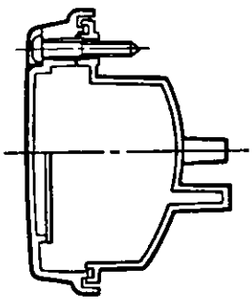

B-B Section

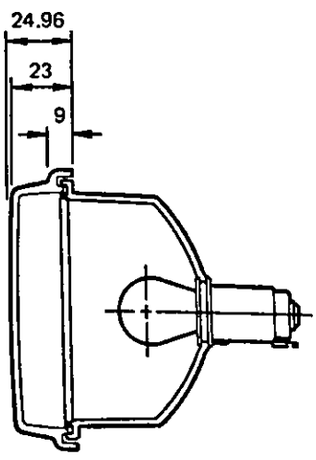

C-C Section

Licence Lamp

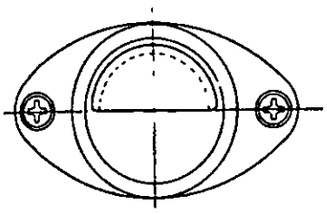

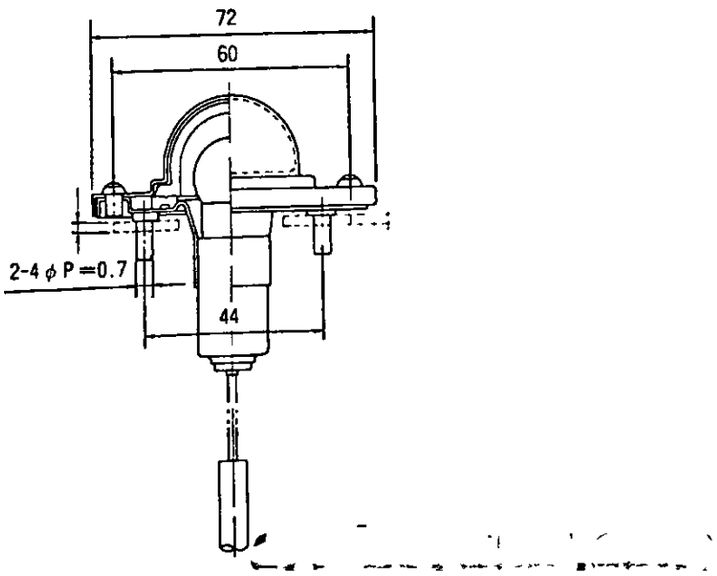

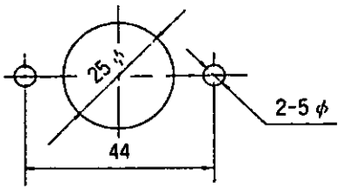

9. LICENSE PLATE BRACKET

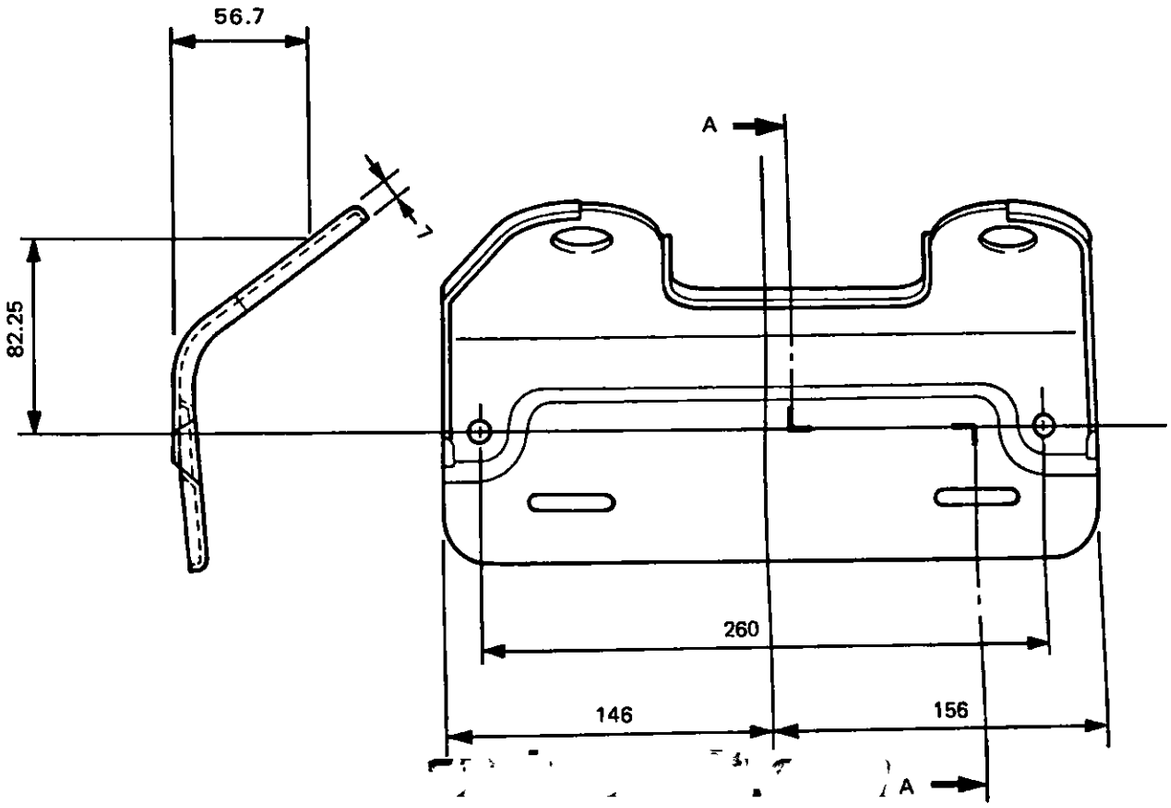

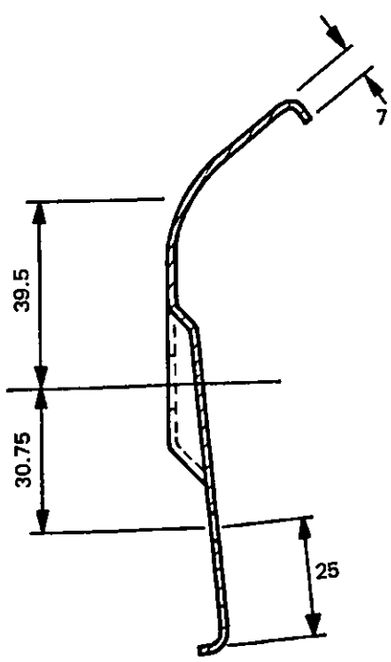

A-A Section

SYSTEM INDEX

1986 Production Vehicles (Page 91 to Page 99)

LAND CRUISER (Heavy-Duty)

LAND CRUISER (Heavy-Duty) ELECTRICAL WIRING DIAGRAM-1986 Production Vehicles (Page 1 to Page 8)

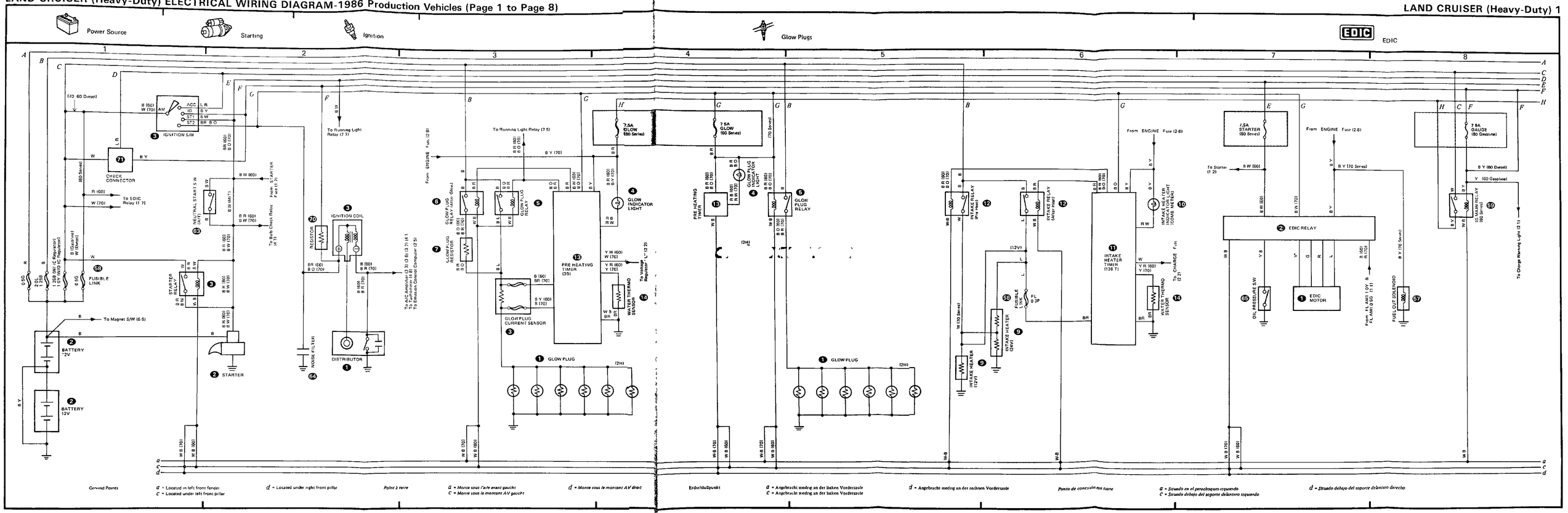

Ground Points

a = Located in left front fender
c = Located under left front pillar
d = Located under right front pillar

Point à terre

a = Monté sous l'aile avant gauche
c = Monté sous le montant AV gauche
d = Monté sous le montant AV droit

Erdschlußpunkt

a = Angebracht mnding an der linken Vordersäule
c = Angebracht mnding an der linken Vordersäule
d = Angebracht mnding an der rechnen Vordersäule

Punto de conexión tierra

a = Situado en el parachoques izquierdo
c = Situado debajo del soporte delantero izquierdo
d = Situado debajo del soporte delantero derecho

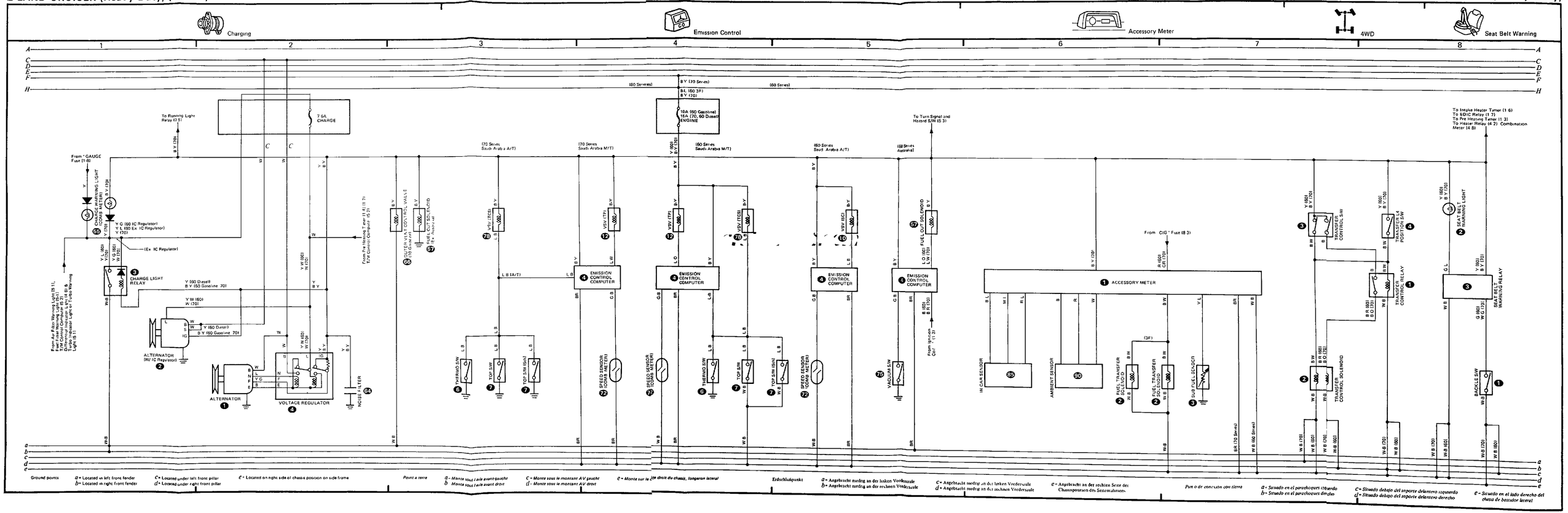
Charging
Emission Control
Accessory Meter
4WD
Seat Belt Warning
7.5A CHARGE
10A (60 Gasoline) 15A (70, 60 Diesel) ENGINE
CHARGE WARNING LIGHT
CHARGE LIGHT RELAY
ALTERNATOR (W/ IC Regulator)
ALTERNATOR
VOLTAGE REGULATOR
NOISE FILTER
TOWER VALVE CONTROL VALVE (Diesel)
FUEL CUT SOLENOID (Ex. Diesel)
EMISSION CONTROL COMPUTER
VSV (TP)
VSV (TCS)
THERMO SW
TOP SW
TOP SW (SA)
SPEED SENSOR (COMB METER)
VACUUM SW
FUEL CUT SOLENOID
ACCESSORY METER
IN CAR SENSOR
AMBIENT SENSOR
FUEL TRANSFER SOLENOID
SUB FUEL SENSOR
TRANSFER CONTROL SW
TRANSFER LO POSITION SW
TRANSFER CONTROL RELAY
TRANSFER CONTROL SOLENOID
SEAT BELT WARNING LIGHT
BACKLE SW
SEAT BELT WARNING RELAY
To Running Light Relay (7 5)
From "GAUGE" Fuse (1 8)
From Pre Heating Timer (1 4) (1 7) Type Combination Meter (5 2)
From Air Filter Warning Light (9 11), Low Fuel Warning Light (9 8), TVM Control Computer (5 2), Diesel Throttle Sensor (1 8), Turbo Indicator Light or Turbo Warning Light (9 1)
To Turn Signal and Hazard S/W (5 3)
From Vacuum Cut V (1 2)
From CIG "Fuse (8 3)
To Intake Heater Timer (1 6)
To EDIC Relay (1 7)
To Pre Heating Timer (1 3)
To Heater Relay (4 2) Combination Meter (4 8)
Ground points
a - Located on left front fender
b - Located in right front fender
c - Located under left front pillar
d - Located under right front pillar
e - Located on right side of chassis position on side frame
Point à terre
a - Monté sous l'aile avant gauche
b - Monté sous l'aile avant droit
c - Monté sous le montant AV gauche
d - Monté sous le montant AV droit
e - Monté sur le côté droit du chassis, longeron latéral
Erdschlußpunkt
a - Angebracht niedrig an der linken Vordersäule
b - Angebracht niedrig an der rechten Vordersäule
c - Angebracht niedrig an der linken Vordersäule
d - Angebracht niedrig an der rechten Vordersäule
e - Angebracht an der rechten Seite des Chassispositions des Seitenrahmens
Punto de conexión con tierra
a - Situado en el parachoques izquierdo
b - Situado en el parachoques derecho
c - Situado debajo del soporte delantero izquierdo
d - Situado debajo del soporte delantero derecho
e - Situado en el lado derecho del chasis de bastidor lateral

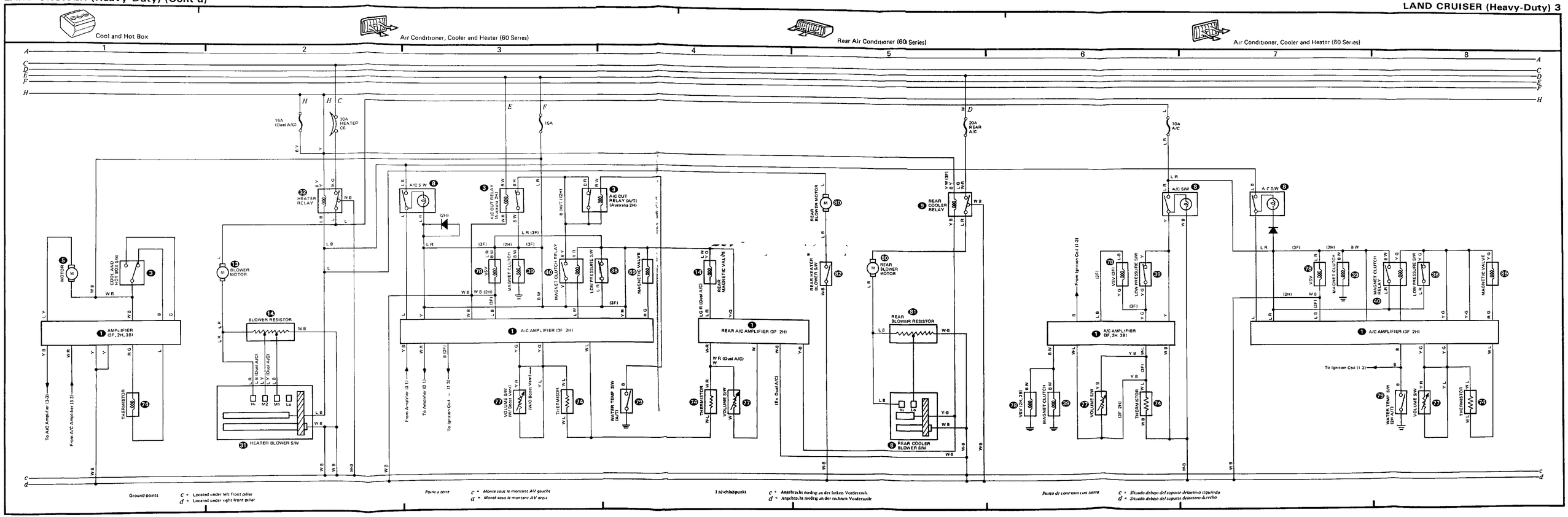
Cool and Hot Box
Air Conditioner, Cooler and Heater (60 Series)
Rear Air Conditioner (60 Series)
Air Conditioner, Cooler and Heater (60 Series)
15A (Dual A/C)
30A HEATER CB
15A
20A REAR A/C
10A A/C
HEATER RELAY
A/C S/W
A/C CUT RELAY (Australia 2H)
A/C CUT RELAY (A/T) (Australia 2H)
REAR COOLER RELAY
REAR BLOWER MOTOR
REAR HEATER BLOWER S/W
REAR BLOWER RESISTOR
REAR COOLER BLOWER S/W
MOTOR
COOL AND HOT BOX S/W
BLOWER MOTOR
BLOWER RESISTOR
AMPLIFIER (3F, 2H, 3B)
A/C AMPLIFIER (3F 2H)
REAR A/C AMPLIFIER (3F 2H)
A/C AMPLIFIER (3F, 2H 3B)
THERMISTOR
HEATER BLOWER S/W
MAGNET CLUTCH
LOW PRESSURE S/W
MAGNETIC VALVE
VSV
VOLUME S/W
WATER TEMP S/W (A/T)
To A/C Amplifier (3-3)
From A/C Amplifier (3-3)
From Amplifier (3-1)
To Amplifier (3-1)
To Ignition Coil (1-3)
From Ignition Coil (1-3)
(W/O Bezel Vent)
(Ex. Dual A/C)
Ground points
C = Located under left front pillar
d = Located under right front pillar
Point à terre
c = Monté sous le montant AV gauche
d = Monté sous le montant AV droit
Lötchlußpunkt
c = Angebracht neding an der linken Vordersäule
d = Angebracht neding an der rechten Vordersäule
Punto de conexión con tierra
c = Situado debajo del soporte delantero izquierdo
d = Situado debajo del soporte delantero derecho

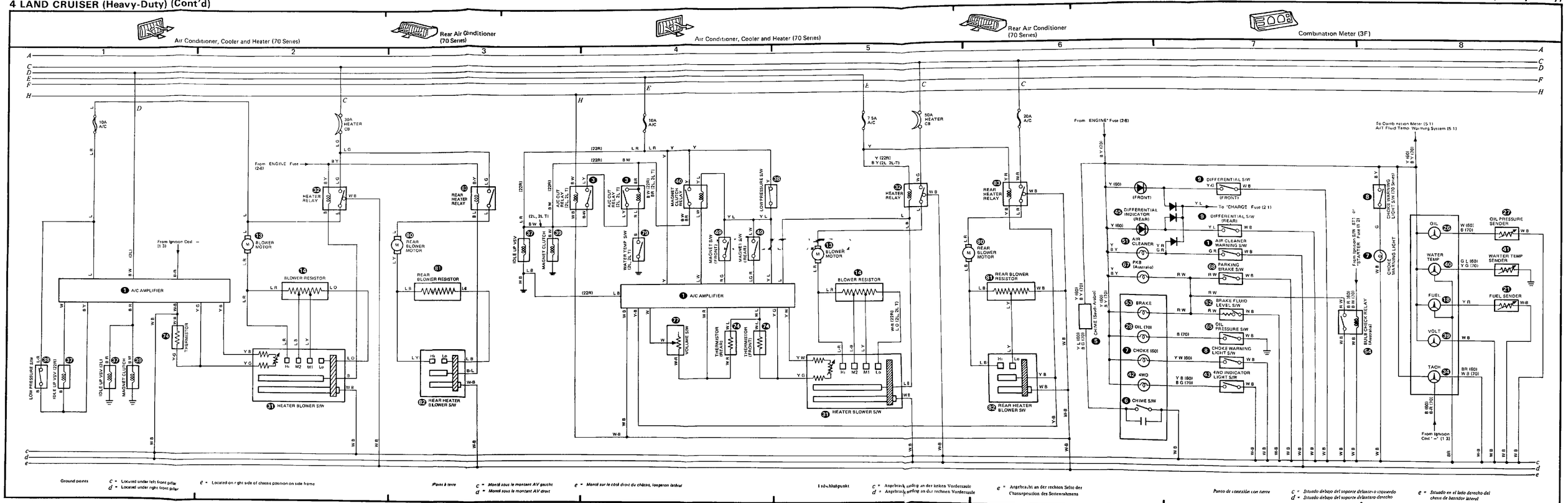
Air Conditioner, Cooler and Heater (70 Series)
Rear Air Conditioner (70 Series)
Air Conditioner, Cooler and Heater (70 Series)
Rear Air Conditioner (70 Series)
Combination Meter (3F)
1
2
3
4
5
6
7
8
A
C
D
E
F
H
10A A/C
30A HEATER CB
From ENGINE Fuse (2-8)
HEATER RELAY
REAR HEATER RELAY
BLOWER MOTOR
REAR BLOWER MOTOR
From Ignition Coil – (1 3)
A/C AMPLIFIER
BLOWER RESISTOR
REAR BLOWER RESISTOR
THERMISTOR
HEATER BLOWER S/W
REAR HEATER BLOWER S/W
LOW PRESSURE S/W
IDLE UP VSV (2L)
MAGNET CLUTCH
IDLE UP VSV (22R)
AIR CUT RELAY (2L, 2L-T)
AIR CUT RELAY (22R, 2L-T)
MAGNET CLUTCH RELAY
WATER TEMP S/W (2L, 2L-T)
MAGNET S/W (FRONT)
MAGNET S/W (REAR)
VOLUME S/W
THERMISTOR (REAR)
THERMISTOR (FRONT)
7.5A A/C
50A HEATER CB
20A A/C
REAR HEATER BLOWER MOTOR
REAR BLOWER RESISTOR
REAR HEATER BLOWER SW
DIFFERENTIAL S/W (FRONT)
DIFFERENTIAL INDICATOR (REAR)
DIFFERENTIAL S/W (REAR)
AIR CLEANER
AIR CLEANER WARNING S/W
PKB (Australia)
PARKING BRAKE S/W
BRAKE
BRAKE FLUID LEVEL S/W
OIL (70)
OIL PRESSURE S/W
CHOKE (60)
CHOKE WARNING LIGHT S/W
4WD
4WD INDICATOR LIGHT S/W
CHIME S/W
CHOKE (Saudi-Arabia)
To "CHARGE" Fuse (2 1)
To Combination Meter (5 1) A/T Fluid Temp. Warning System (5 1)
From Ignition S/W ST1 or "ST" STARTER Fuse (1 2)
CHOKE WARNING LIGHT
CHOKE WARNING LIGHT S/W (70 Series)
BULB CHECK RELAY (Australia)
OIL
WATER TEMP
FUEL
VOLT
TACH
OIL PRESSURE SENDER
WATER TEMP SENDER
FUEL SENDER
From Ignition Coil "–" (1 3)
Ground points
c = Located under left front pillar
d = Located under right front pillar
e = Located on right side of chassis position on side frame
Points à terre
c = Monté sous le montant AV gauche
d = Monté sous le montant AV droit
e = Monté sur le côté droit du châssis, longeron latéral
Erdungspunkt
c = Angebracht an der linken Vordersäule
d = Angebracht an der rechten Vordersäule
e = Angebracht an der rechten Seite der Chassisposition des Seitenrahmens
Punto de conexión con tierra
c = Situado debajo del soporte delantero izquierdo
d = Situado debajo del soporte delantero derecho
e = Situado en el lado derecho del chasis de bastidor lateral

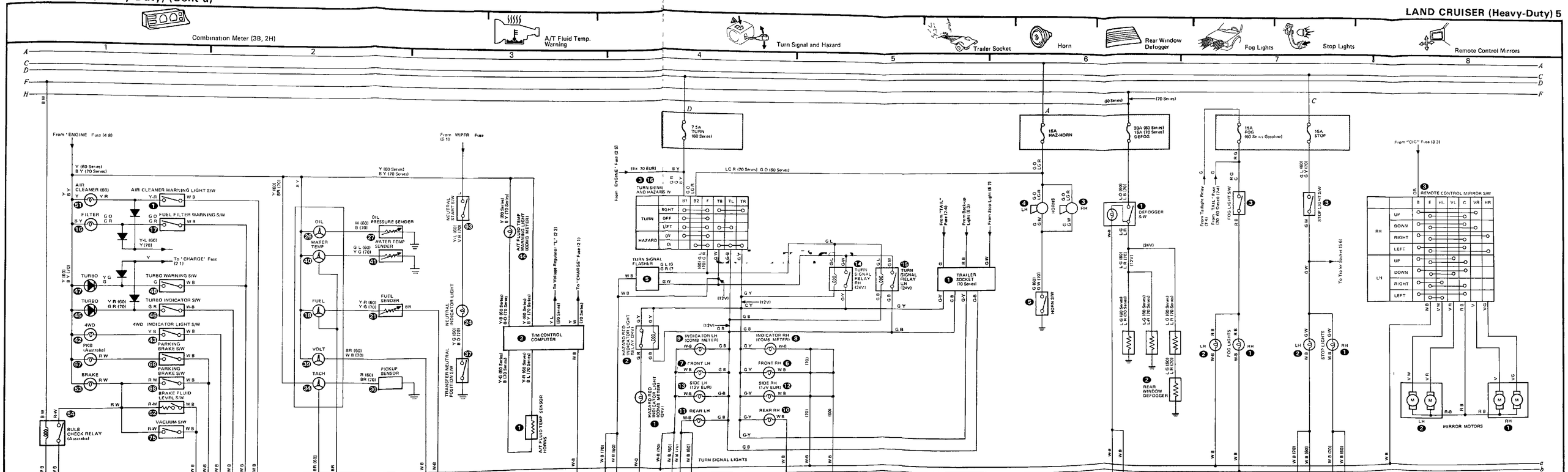
Combination Meter (3B, 2H)
A/T Fluid Temp. Warning
Turn Signal and Hazard
Trailer Socket
Horn
Rear Window Defogger
Fog Lights
Stop Lights
Remote Control Mirrors
From "ENGINE" Fuse (4 8)
From WIPER Fuse (5 1)
AIR CLEANER WARNING LIGHT S/W
FUEL FILTER WARNING S/W
TURBO WARNING S/W
TURBO INDICATOR S/W
4WD INDICATOR LIGHT S/W
PARKING BRAKE S/W
BRAKE FLUID LEVEL S/W
VACUUM S/W
BULB CHECK RELAY (Australia)
OIL PRESSURE SENDER
WATER TEMP SENDER
FUEL SENDER
PICKUP SENSOR
NEUTRAL START S/W
NEUTRAL INDICATOR LIGHT
TRANSFER NEUTRAL POSITION S/W
A/T FLUID TEMP WARNING LIGHT (COMB METER)
T/M CONTROL COMPUTER
A/T FLUID TEMP SENSOR
To Voltage Regulator "L" (2 2)
To "CHARGE" Fuse (2 1)
7.5A TURN (60 Series)
TURN SIGNAL AND HAZARDS SW
TURN SIGNAL FLASHER
HAZARD INDICATOR LIGHT RELAY (24V)
HAZARD INDICATOR LIGHT (COMB METER)
INDICATOR LH (COMB METER)
INDICATOR RH (COMB METER)
FRONT LH
SIDE LH (12V EUR)
REAR LH
FRONT RH
SIDE RH (12V EUR)
REAR RH
TURN SIGNAL RELAY LH (24V)
TURN SIGNAL RELAY RH (24V)
TURN SIGNAL LIGHTS
From "TAIL" Fuse (7A)
From Back-up Light (6 3)
From Stop Light (6 7)
TRAILER SOCKET (70 Series)
15A HAZ-HORN
20A (60 Series) 15A (70 Series) DEFOG
HORNS
HORN S/W
DEFOGGER S/W
REAR WINDOW DEFOGGER
15A FOG (60 Series Gasoline)
15A STOP
From Taillight Relay (7 4)
From "TAIL" Fuse (7A) (70 60 Diesel (7A))
FOG LIGHT S/W
FOG LIGHTS
STOP LIGHT S/W
STOP LIGHTS
To Trailer Socket (5 6)
From "CIG" Fuse (8 3)
REMOTE CONTROL MIRROR S/W
MIRROR MOTORS
Ground points
a = Located in left front fender
b = Located in right front fender
c = Located under left front pillar
d = Located under right front pillar
e = Located on right side of chassis position on side frame
Point a terre
a = Monté sous l'aile avant-gauche
b = Monté sous l'aile avant droit
c = Monté sous le montant AV gauche
d = Monté sous le montant AV droit
e = Monté sur le côté droit du chassis, longeron latéral
Indicadlupunkt
a = Angebracht nedrig an der linken Vorderseuale
b = Angebracht nedrig an der rechten Vorderseuale
c = Angebracht nedrig an der linken Vorderseuale
d = Angebracht nedrig an der rechten Vorderseuale
e = Angebracht an der rechten Seite der Chassisposition des Seitenrahmens
Punto de conexión con tierra
a = Situado en el parachoques izquierdo
b = Situado en el parachoques derecho
c = Situado debajo del soporte delantero izquierdo
d = Situado debajo del soporte delantero derecho
e = Situado en el lado derecho del chasis de bastidor lateral

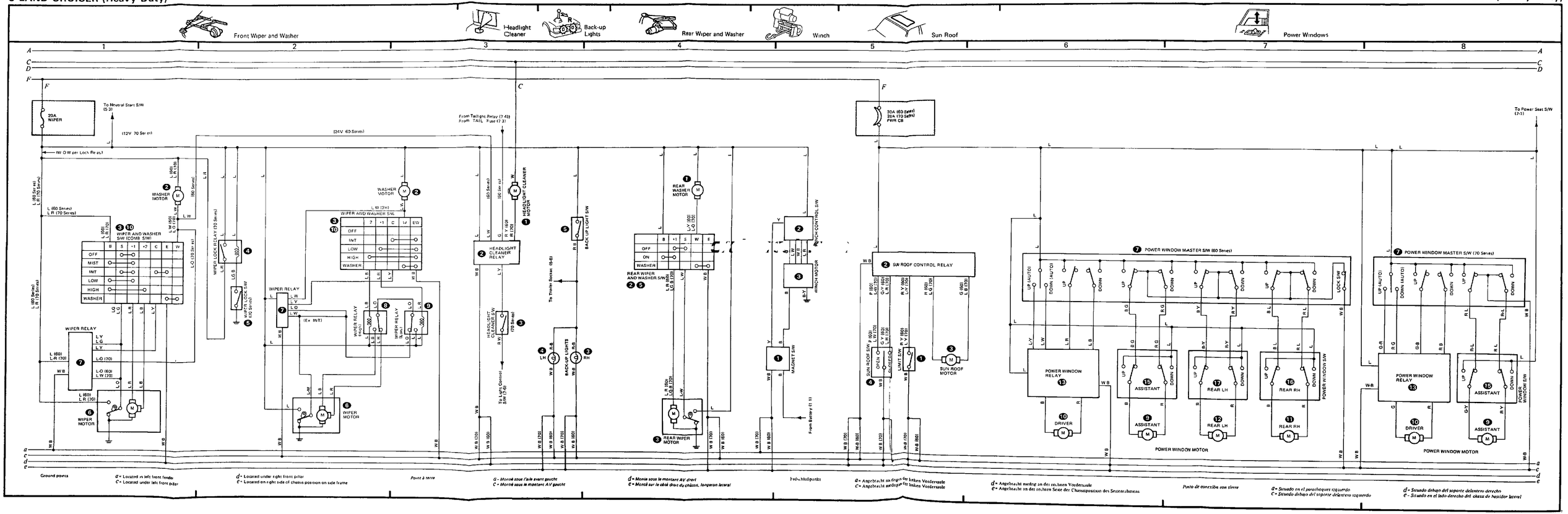
Front Wiper and Washer
Headlight Cleaner
Back-up Lights
Rear Wiper and Washer
Winch
Sun Roof
Power Windows
20A WIPER
To Neutral Start S/W (5-3)
(12V 70 Series)
(24V 60 Series)
W O W per Lock Relay)
From Taillight Relay (7-4)
From TAIL Fuse (7-3)
30A (60 Series) 20A (70 Series) PWR CB
To Power Seat S/W (7-1)
WASHER MOTOR
WIPER AND WASHER S/W (COMB S/W)
OFF
INT
LOW
HIGH
WASHER
WIPER LOCK RELAY (70 Series)
WIPER LOCK S/W (70 Series)
WIPER RELAY
WIPER MOTOR
HEADLIGHT CLEANER RELAY
HEADLIGHT CLEANER MOTOR
HEADLIGHT CLEANER S/W (70 Series)
To Trailer Socket (6-5)
To Light Control S/W (7-6)
BACK-UP LIGHT S/W
BACK-UP LIGHTS
REAR WASHER MOTOR
REAR WIPER AND WASHER S/W
REAR WIPER MOTOR
WINCH CONTROL S/W
WINCH MOTOR
MAGNET S/W
From Battery (1-1)
SUN ROOF CONTROL RELAY
SUN ROOF S/W
SUN ROOF MOTOR
LIMIT S/W
POWER WINDOW MASTER S/W (60 Series)
POWER WINDOW MASTER S/W (70 Series)
POWER WINDOW RELAY
DRIVER
ASSISTANT
REAR LH
REAR RH
POWER WINDOW S/W
LOCK S/W
POWER WINDOW MOTOR
Ground points
Point à terre
Punto de conexión con tierra
Erdungspunkte

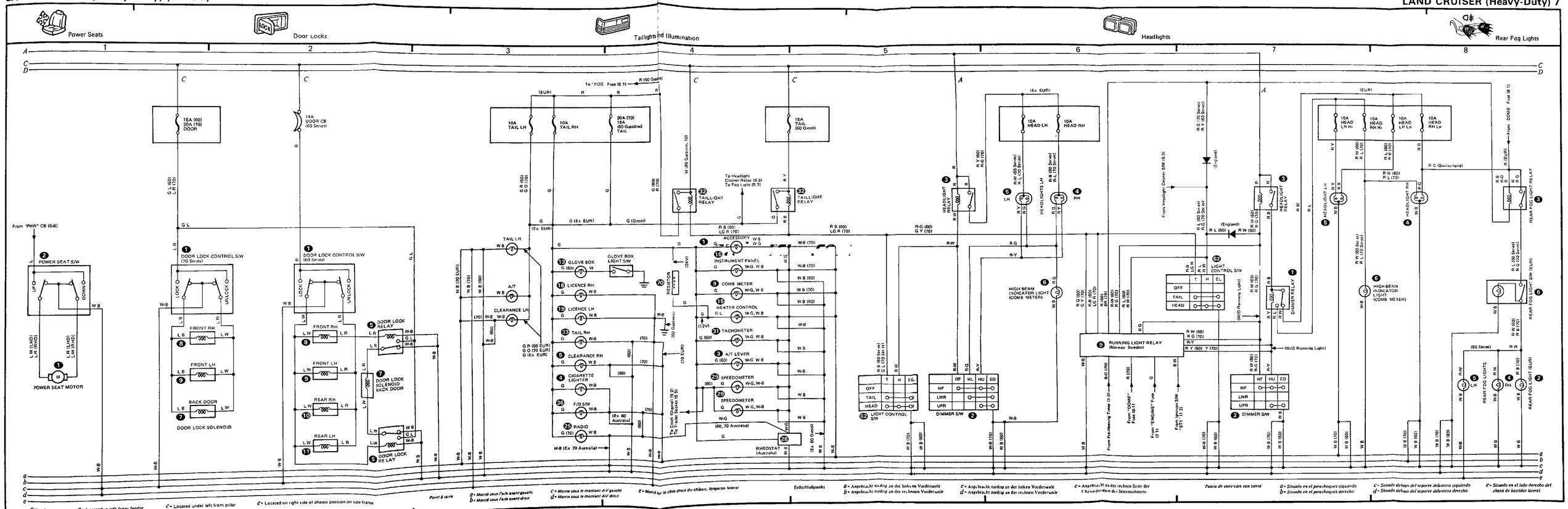
Power Seats
Door Locks
Taillights and Illumination
Headlights
Rear Fog Lights
15A (60) 20A (70) DOOR
14A DOOR CB (60 Series)
10A TAIL LH
10A TAIL RH
20A (70) 15A (60 Gasoline) TAIL
15A TAIL (60 Diesel)
10A HEAD LH
10A HEAD RH
10A HEAD LH Hi
10A HEAD RH Hi
10A HEAD LH Lo
10A HEAD RH Lo
From "PWR" CB (6-8)
POWER SEAT S/W
POWER SEAT MOTOR
DOOR LOCK CONTROL S/W (70 Series)
DOOR LOCK CONTROL S/W (60 Series)
DOOR LOCK SOLENOID
DOOR LOCK RELAY
DOOR LOCK SOLENOID BACK DOOR
DOOR LOCK RELAY
TAILLIGHT RELAY
TAILLIGHT RELAY
TAIL LH
A/T
CLEARANCE LH
GLOVE BOX
GLOVE BOX LIGHT S/W
LICENCE RH
LICENCE LH
TAIL RH
CLEARANCE RH
CIGARETTE LIGHTER
F/D S/W
RADIO
RESISTOR
ACCESSORY
INSTRUMENT PANEL
COMB METER
HEATER CONTROL
TACHOMETER
A/T LEVER
SPEEDOMETER
SPEEDOMETER
RHEOSTAT (Australia)
HEADLIGHT RELAY
HEADLIGHTS LH
HEADLIGHTS RH
HIGH BEAM INDICATOR LIGHT (COMB METER)
LIGHT CONTROL S/W
OFF
TAIL
HEAD
DIMMER S/W
RUNNING LIGHT RELAY (Norway Sweden)
DIMMER RELAY
HEADLIGHT LH
HEADLIGHT RH
HIGH BEAM INDICATOR LIGHT (COMB METER)
REAR FOG LIGHT RELAY
REAR FOG LIGHTS
REAR FOG LIGHT S/W (EUR)
REAR FOG LIGHT (EUR)
Ground points
a = Located in left front fender
b = Located in right front fender
c = Located under left front pillar
d = Located under right front pillar
e = Located on right side of chassis position on side frame
Point à terre
a = Monté sous l'aile avant-gauche
b = Monté sous l'aile avant-droit
c = Monté sous le montant AV gauche
d = Monté sous le montant AV droit
e = Monté sur le côté droit du châssis, longeron latéral
Erdschlußpunkt
a = Angebracht nach an der linken Vorderwand
b = Angebracht nach an der rechnen Vorderwand
c = Angebracht nach an der linken Vorderwand
d = Angebracht nach an der rechnen Vorderwand
e = Angebracht an der rechten Seite der Chassisposition des Seitenrahmens
Punto de conexión con tierra
a = Situado en el parachoquet izquierdo
b = Situado en el parachoquet derecho
c = Situado debajo del soporte delantero izquierdo
d = Situado debajo del soporte delantero derecho
e = Situado en el lado derecho del chasis de bastidor lateral

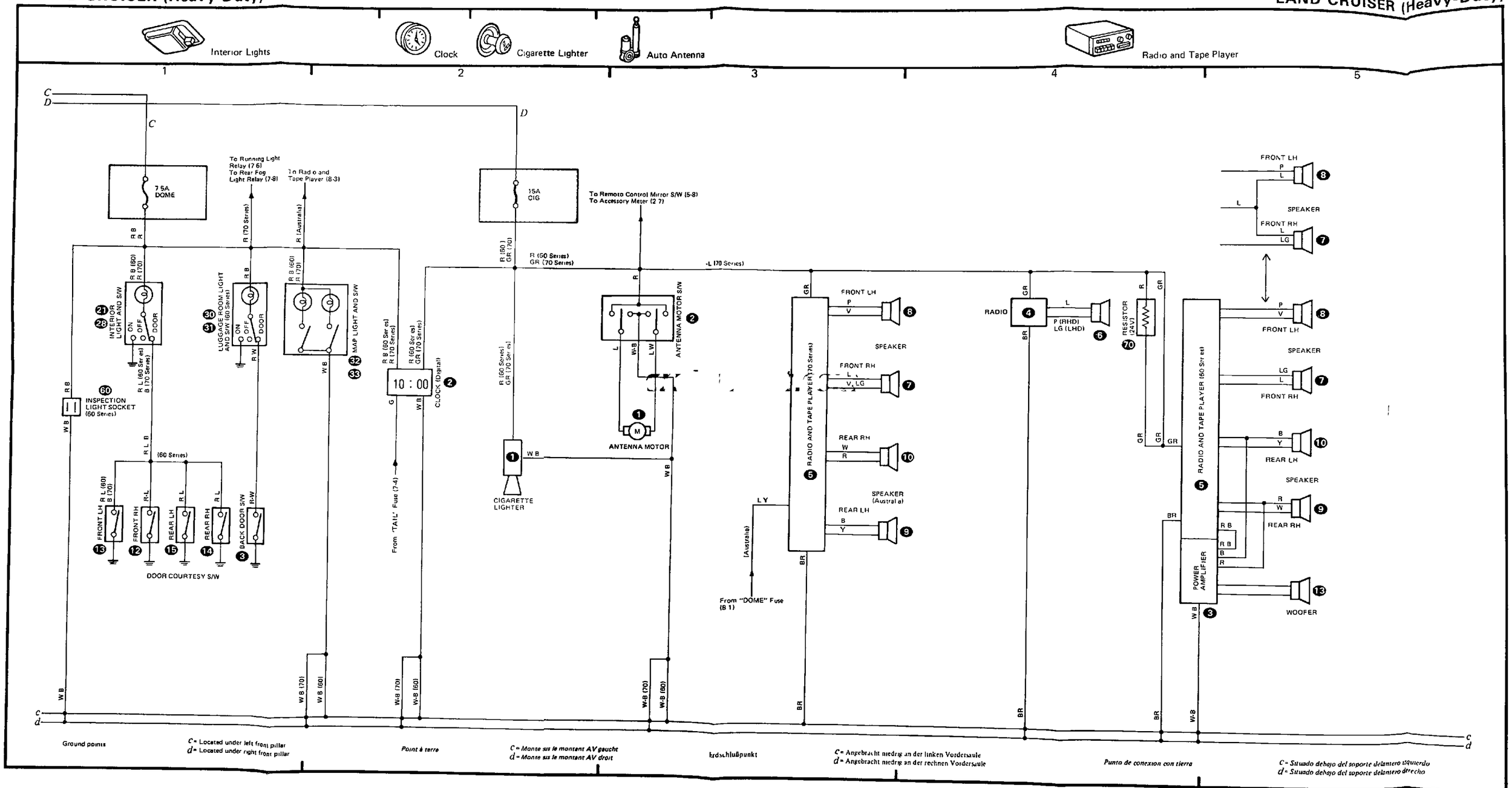
Interior Lights
Clock
Cigarette Lighter
Auto Antenna
Radio and Tape Player
1
2
3
4
5
7.5A DOME
15A CIG
To Running Light Relay (7-6)
To Rear Fog Light Relay (7-8)
To Radio and Tape Player (8-3)
To Remote Control Mirror S/W (5-8)
To Accessory Meter (2-7)
INTERIOR LIGHT AND S/W
LUGGAGE ROOM LIGHT AND S/W (60 Series)
MAP LIGHT AND S/W
INSPECTION LIGHT SOCKET (60 Series)
CLOCK (Digital)
From "TAIL" Fuse (7-4)
ANTENNA MOTOR S/W
ANTENNA MOTOR
CIGARETTE LIGHTER
RADIO AND TAPE PLAYER (70 Series)
RADIO
RESISTOR (24V)
RADIO AND TAPE PLAYER (60 Series)
POWER AMPLIFIER
FRONT LH
SPEAKER
FRONT RH
REAR RH
REAR LH
WOOFER
DOOR COURTESY S/W
FRONT LH
FRONT RH
REAR LH
REAR RH
BACK DOOR S/W
From "DOME" Fuse (B-1)
Ground points
C = Located under left front pillar
d = Located under right front pillar
Point à terre
C = Monte sur le montant AV gauche
d = Monte sur le montant AV droit
Erdschlußpunkt
C = Angebracht niedrig an der linken Vordersäule
d = Angebracht niedrig an der rechnen Vordersäule
Punto de conexion con tierra
C = Situado debajo del soporte delantero izquierdo
d = Situado debajo del soporte delantero derecho

TOYOTA

QUALITY SERVICE

OVERSEAS SERVICE DEPARTMENT
TOYOTA MOTOR CORPORATION
Haruhi Center

PRINTED IN JAPAN ©
APRIL 1986