TROUBLESHOOTING W/VOLT,OHMMETER (A/T)

EG0G8-03

HINT:

- The following troubleshooting procedures are designed for inspection of each separate system, and therefore the actual procedure may vary somewhat. However, troubleshooting should be performed while referring to the inspection methods described in this manual.
- Before beginning inspection, it is best to first make a simple check of the fuses, H—fuses, fusible links and the condition of the connectors.
- The following troubleshooting procedures are based on the supposition that the trouble lies in either a short or open circuit within the computer.
- If engine trouble occurs even though proper operating voltage is detected in the computer connector, then it can be assumed that the ECU is faulty and should be replaced.

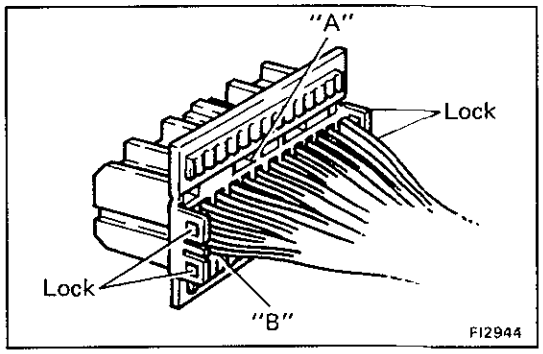

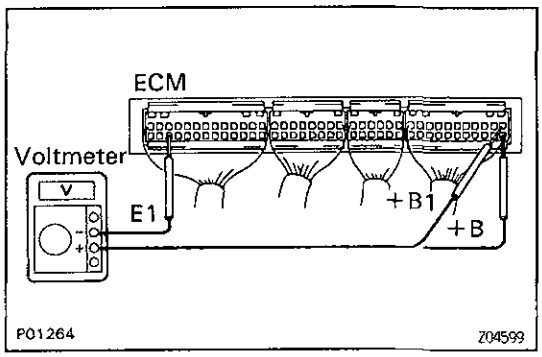

EFI SYSTEM CHECK PROCEDURE

EG0GA-03

PREPARATION

(a) Disconnect the connectors from the ECU.

(b) Remove the locks as shown in the illustration so that the tester probe(s) can easily come in.
NOTICE: Pay attention to sections "A" and "B" in the illustration which can be easily broken.

(c) Reconnect the connectors to the ECU.

(d) Using a voltmeter with high impedance (10 kΩ/V minimum), measure the voltage at each terminal of the wiring connectors.
HINT:
- Perform all voltage measurements with the connectors connected.
- Verify that the battery voltage is 11 V or more when the ignition switch is in "ON" position.

ECU Terminals (For A/T)

Symbol	Connection	Symbol	Connection	Symbol	Connection
E01	POWER GROUND		—	HT2*	NO.2 HEATED OXYGEN SENSOR
E02	POWER GROUND	E11	ECU GROUND		—
#10	INJECTOR (No.1)	TE1	Check Connector	STA	NSW SWITCH
#30	INJECTOR (No.3)	TE2	Check Connector	NSW	IGNITION SWITCH
#20	INJECTOR (No.2)	KNK1	NO.1 KNOCK SENSOR	NEO	ECT ECU
E1	ECU GROUND	KNK2	NO.2 KNOCK SENSOR		—
#40	INJECTOR (No.4)	OX1	NO.1 OXYGEN SENSOR	VA	ECT ECU
IGT	IGNITER	OX2*	NO.2 OXYGEN SENSOR	ECT1	ECT ECU
IPV	VSV FOR EVAP	THW	WATER TEMP. SENSOR	SPD	VEHICLE SPEED SENSOR
EGR*	VSV FOR EGR	OX+	OXYGEN SENSORS	ECT2	ECT ECU
AS*	VSV FOR AS	THA	AIR FLOW METER	A/C	A/C AMPLIFIE
FPU	VSV FOR FUEL PRESSURE CONTROL	IDL	TP SENSOR	ECT	ECT ECU
ISC1	ISC VALVE (No.1 Motor Coil)	VS	AIR FLOW METER		—
		VTA	TP SENSOR	ESA1	ECT ECU
ISC2	ISC VALVE (No.2 Motor Coil)	VCC	TP SENSOR		—
	—	E2	SENSOR GROUND	ESA2	ECT ECU
ISC3	ISC VALVE (No.3 Motor Coil)	G ⊖	DISTRIBUTOR	W	"CHECK" ENGINE WARNING LIGHT
	—	NE	DISTRIBUTOR	ESA3	ECT ECU
ISC4	ISC VALVE (No.4 Motor Coil)		—	M-REL	EFI MAIN RELAY (COIL)
IGF	IGNITER	G1	DISTRIBUTOR	STP	STOP LIGHT SWITCH
FPR	FUEL PUMP RELAY		—	BATT	BATTERY B+
VF2	Check Connector	G2	DISTRIBUTOR	IGSW	IGNITION SWITCH
#50	INJECTOR (No.5)		—	+B1	EFI MAIN RELAY
VF1	Check Connector		—	+B	EFI MAIN RELAY
#60	INJECTOR (No.6)	HT1	NO.1 OXYGEN SENSOR		
	—		—		

*Only for Europe.

ECU Terminals

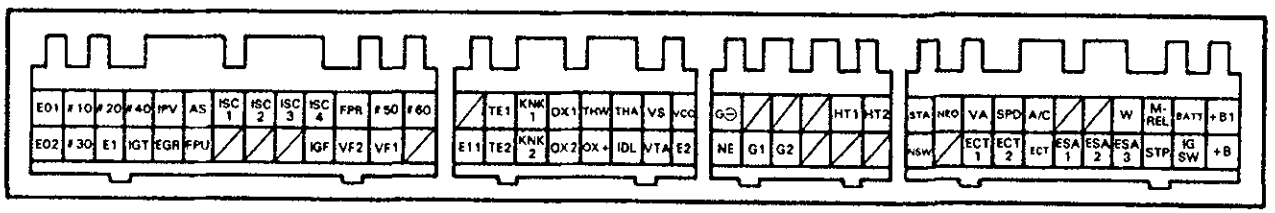

P01399

EG270-01

EG

ECU Wiring Connectors Voltage (For A/T)

No.	Terminals	Condition		STD voltage (V)	See page
1	BATT — E1	—		9 — 14	EG-203
	IG SW — E1	IG SW ON			
	M-REL — E1				
	+B, +B1 — E1				
2	IDL — E2	IG SW ON	Throttle valve open	9 — 14	EG-204
	VCC — E2		—	4.5 — 5.5	
	VTA — E2		Throttle valve fully closed (Throttle opener must be cancelled first)	0.3 — 0.8	
			Throttle valve fully open	3.2 — 4.9	
3	VCC — E2		—	4.5 — 5.5	EG-208
	VS — E2		Measuring plate fully closed	3.5 — 4.5	
			Measuring plate fully open	0.2 — 0.5	
		Idling		1.2 — 2.4	
		3,000 rpm		0.8 — 1.3	
4	#10 ~ #60 — E01, E02	IG SW ON		9 — 14	EG-209
5	THA — E2	IG SW ON	Intake air temp. 20°C (68°F)	0.5 — 3.4	EG-210
6	THW — E2		Engine coolant temp. 80°C (176°F)	0.2 — 1.0	EG-211
7	STA — E1	Cranking		6 or more	EG-212
8	IGT — E1	Idling		Pulse generation	EG-213
9	ISC1 ~ ISC4 — E1	IG SW ON		9 — 14	EG-214
10	W — E1	No trouble (malfunction indicator lamp light off) and engine running		9 — 14	EG-215

ECM Terminals

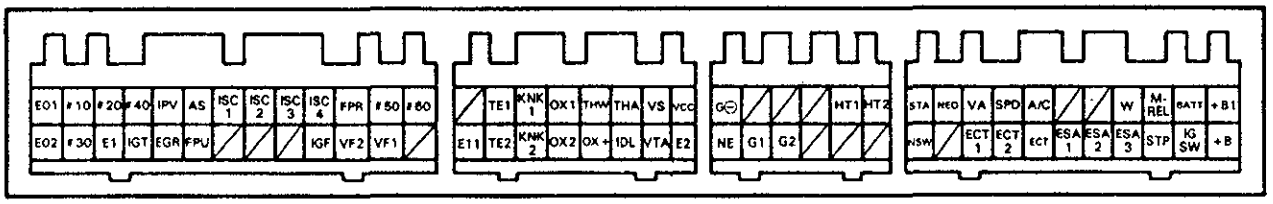

P01399

No.	Terminals	Trouble	Condition	STD voltage
1	BATT – E1	No voltage	–	9 – 14 V
	IG SW – E1	No voltage	IG SW ON	9 – 14 V
	M-REL – E1			
	+B (+B1) – E1			

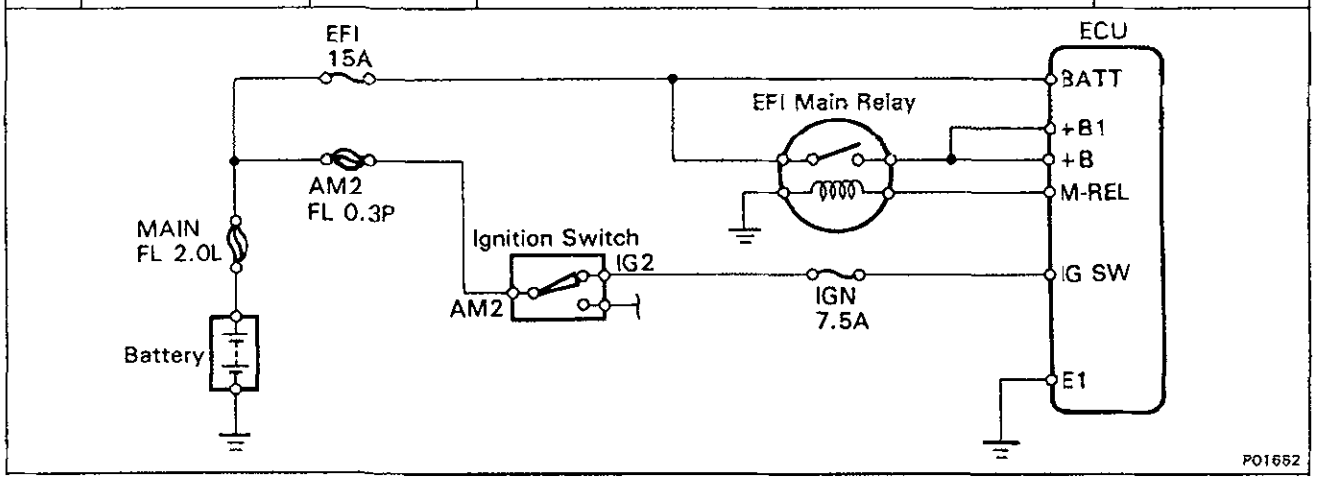

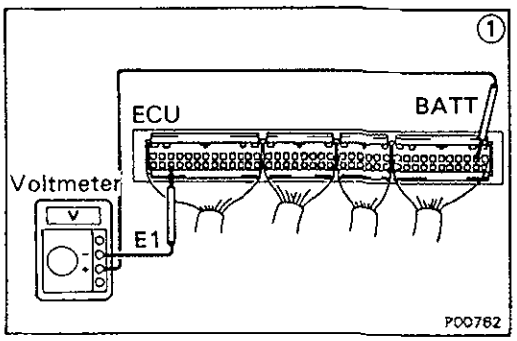

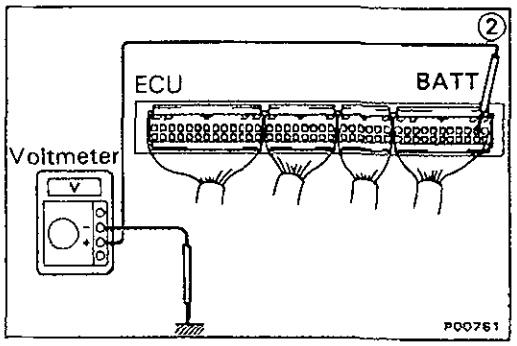

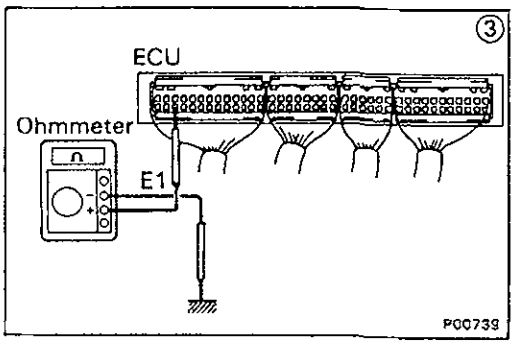

• **BATT – E1**

① There is no voltage between ECU terminals BATT and E1.

↓

② Check that there is voltage between ECU terminal BATT and body ground.

NO → Check fuse and fusible link. → BAD → Replace.

OK → ③ Check wiring between ECU terminal E1 and body ground.

- OK → Try another ECU.
- BAD → Repair or replace.

OK → Check wiring between ECU terminal and battery. → BAD → Repair or replace.

EG

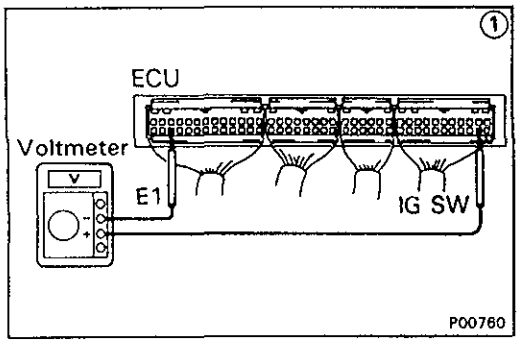

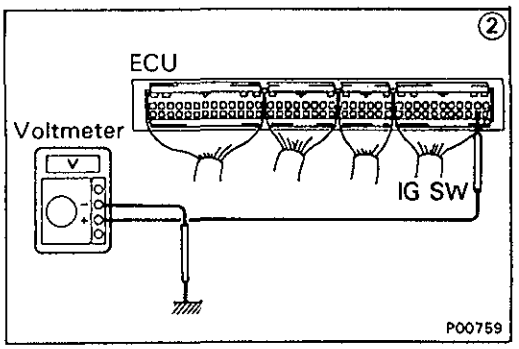

• **IG SW — E1**

① There is no voltage between ECU terminals IG SW and E1. **(IG SW ON)**

② Check that there is voltage between ECU terminal IG SW and body ground. **(IG SW ON)**

NO → Check fuses, fusible link and ignition switch. → BAD → Replair or replace.

OK → Check wiring between ECU terminal E1 and body ground.

OK → Try another ECU.

BAD → Repair or replace.

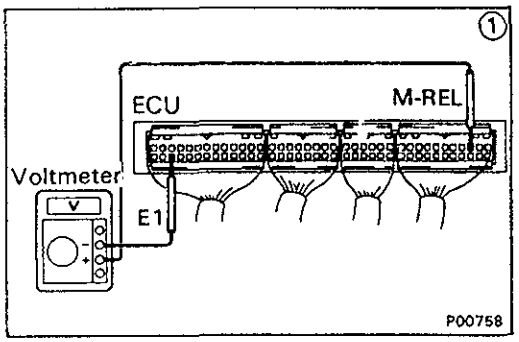

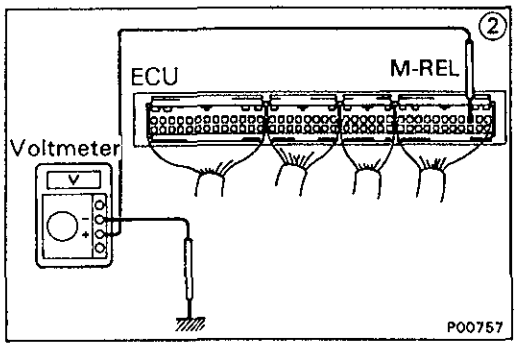

• **M-REL — E1**

① There is no voltage between ECU terminals M-REL and E1. **(IG SW ON)**

② Check that there is voltage between ECU terminal M-REL and body ground. **(IG SW ON)**

NO → Check EFI main relay and wiring harness.(See page EG-272) → BAD → Replace.

OK → Try another ECU.

OK → Check wiring between ECU terminal E1 and body ground.

OK → Try another ECU.

BAD → Repair or replace.

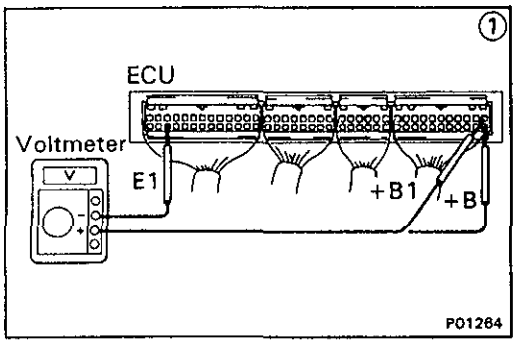

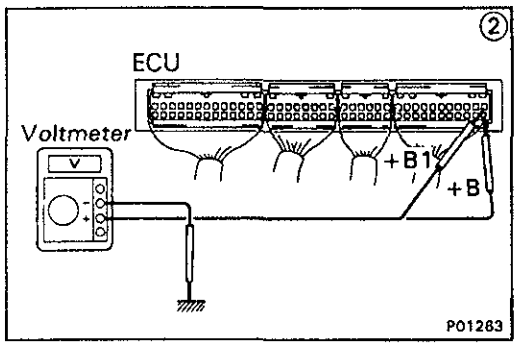

• **+B (+B1) — E1**

① There is no voltage between ECU terminals +B (+B1) and E1. **(IG SW ON)**

② Check that there is voltage between ECU terminal +B (+B1) and body ground. **(IG SW ON)**

- NO → Check fuse, fusible link and wiring harness.
- OK → Check wiring between ECU terminal E1 and body ground.
  - OK → Try another ECU.
  - BAD → Repair or replace.

Check fuse, fusible link and wiring harness.
- BAD → Repair or replace.
- OK → Check EFI main relay. (See page EG-272)
  - BAD → Replace.
  - OK → Refer to M-REL — E1 trouble section.

EG

EG

No.	Terminals	Trouble	Condition		STD voltage
2	IDL — E2	No voltage	IG SW ON	Throttle valve open	9 — 14 V
	VCC — E2			—	4.5 — 5.5 V
	VTA — E2			Throttle valve fully closed (Throttle opener must be cancelled first)	0.3 — 0.8 V
				Throttle valve fully open	3.2 — 4.9 V

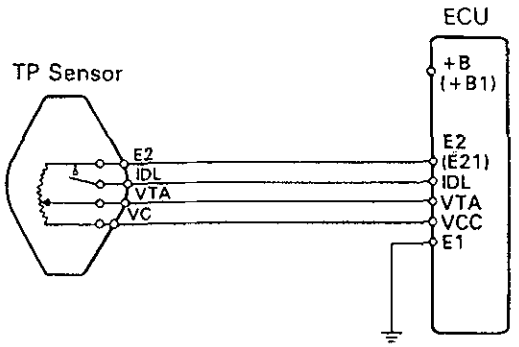

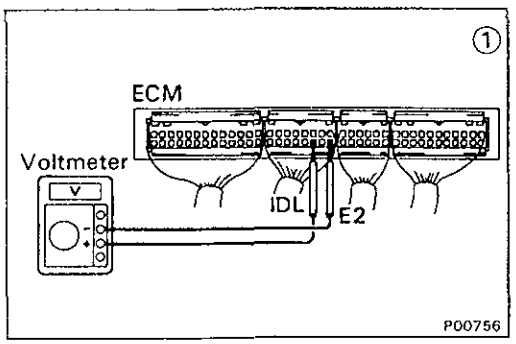

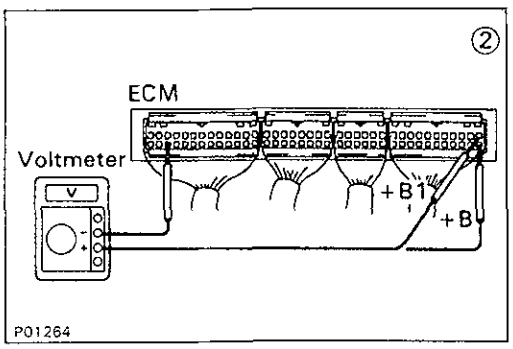

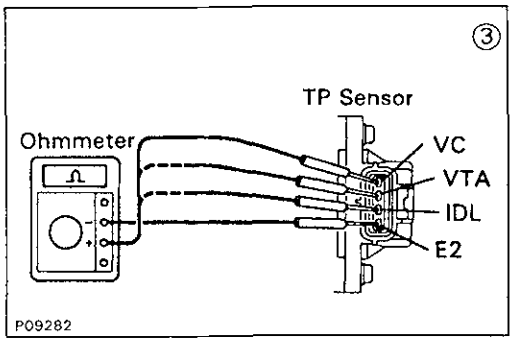

• IDL - E2

① There is no voltage between ECU terminals IDL and E2. **(IG SW ON)** (Throttle valve open)

↓

② Check that there is voltage between ECU terminal +B (+B1) and body ground. **(IG SW ON)**

NO → Refer to No.1. (See page EG-203)

OK → Check wiring between ECU terminal E1 and body ground.

- OK → Try another ECU.
- BAD → Repair or replace.

Refer to No.1. (See page EG-203) → BAD → Repair or replace.

OK → ③ Check TP sensor. (See page EG-259)

- BAD → Repair or replace TP sensor.
- OK → Check wiring between ECU and TP sensor.
  - OK → Try another ECU.
  - BAD → Repair or replace.

W02819

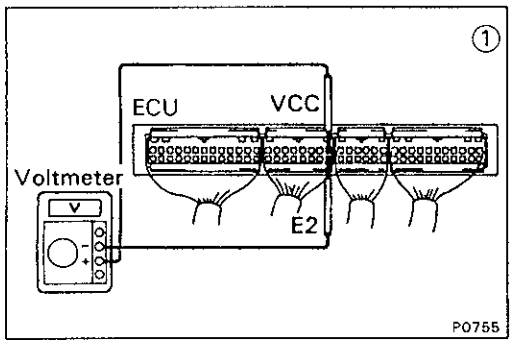

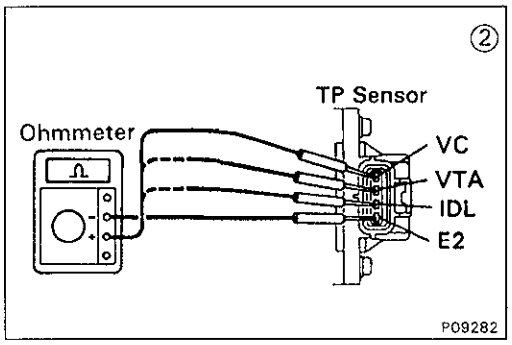

• **VC - E2**

① There is no voltage between ECU terminals VCC and E2. **(IG SW ON)**

↓

Check that there is voltage between ECU terminal +B (+B1) and body ground. **(IG SW ON)**

- OK → ② Check TP sensor. (See page EG-259)
  - BAD → Repair or replace.
  - OK → Check wiring between ECU and TP sensor.
    - OK → Try another ECU.
    - BAD → Repair or replace wiring.
- NO → Refer to No.1. (See page EG-203)

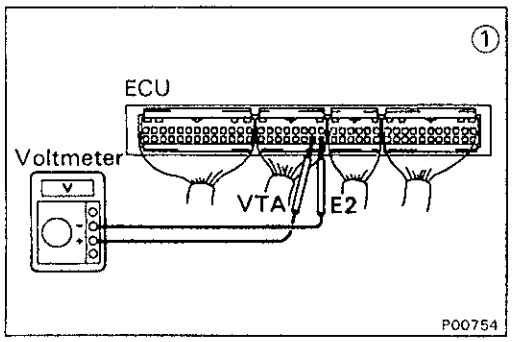

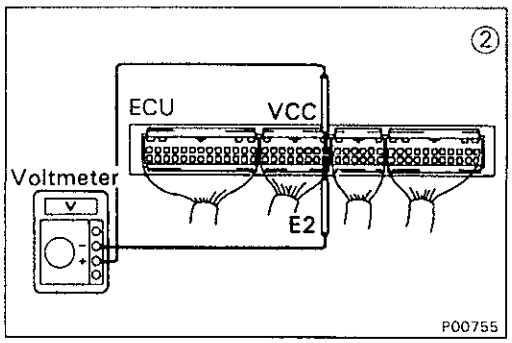

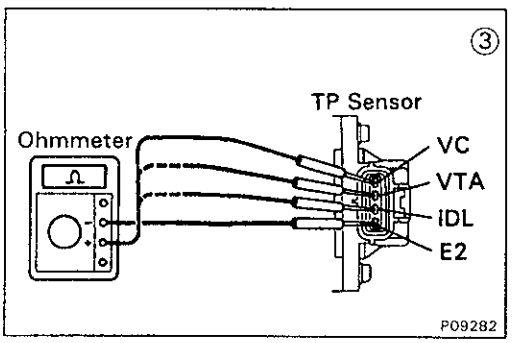

• **VTA - E2**

① There is no specified voltage at ECU terminals VTA and E2. **(IG SW ON)**

↓

② Check that there is voltage between ECU terminals VCC and E2. **(IG SW ON)**

- NO → Refer to VCC — E2 trouble section.
- OK →

↓

③ Check TP sensor. (See page EG-259)
- BAD → Repair or replace.
- OK ↓

Check wiring between ECU and TP sensor.
- BAD → Repair or replace.
- OK ↓

Try another ECU.

EG

V02820

EG

No.	Terminals	Trouble	Condition		STD voltage
3	VCC – E2	No voltage	IG SW ON	–	4.5 – 5.5 V
	VS – E2			Measuring plate fully closed	3.5 – 4.5 V
	VS – E2			Measuring plate fully open	0.2 – 0.5 V
	VS – E2		Idling		1.2 – 2.4 V
	VS – E2		3,000 rpm		0.8 – 1.3 V

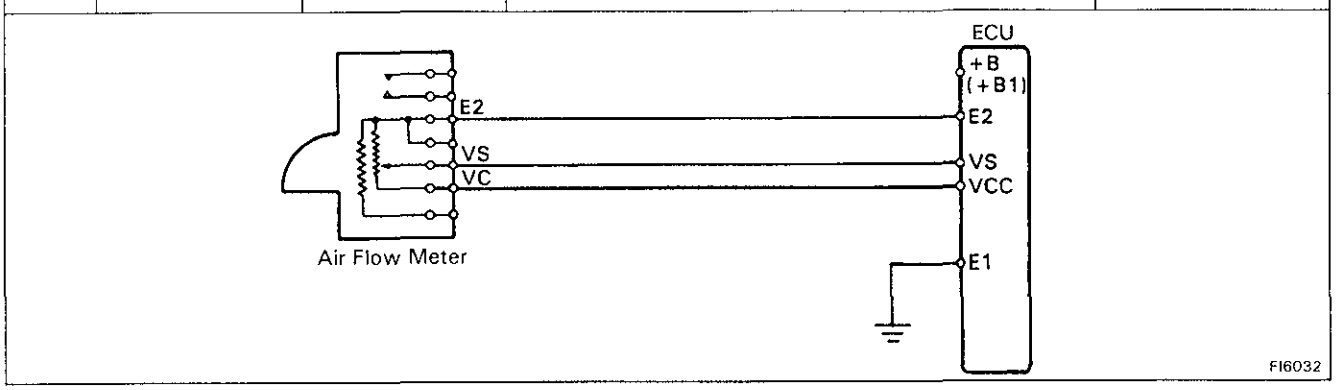

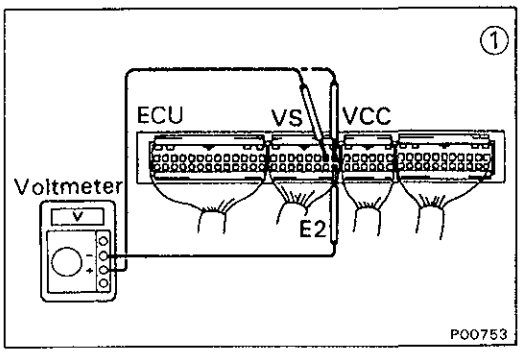

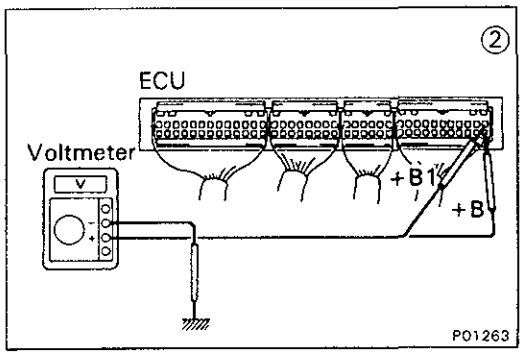

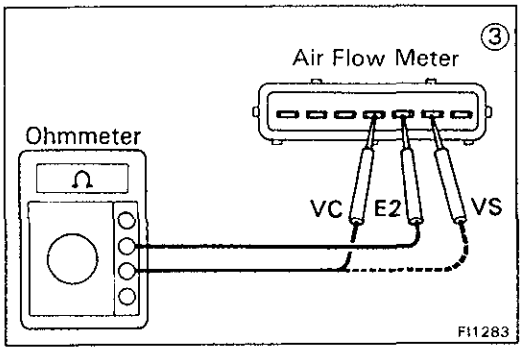

① There is no voltage between ECU terminals VCC or VS and E2. **(IG SW ON)**

↓

② Check that there is voltage between ECU terminal +B (+B1) and body ground. **(IG SW ON)**

- NO → Refer to No.1 (See page EG-203)
- OK ↓

Check wiring between ECU terminal E1 and body ground.

- BAD → Repair or replace.
- OK ↓

③ Check Air Flow meter. (See page EG-267)

- BAD → Replace Air Flow meter.
- OK ↓

Check wiring between ECU and Air Flow meter.

- BAD → Repair or replace.
- OK ↓

Try another ECU.

V02821

No.	Terminals	Trouble	Condition	STD voltage
4	#10 E01 ~ #60 E02	No voltage	IG SW ON	9 — 14 V

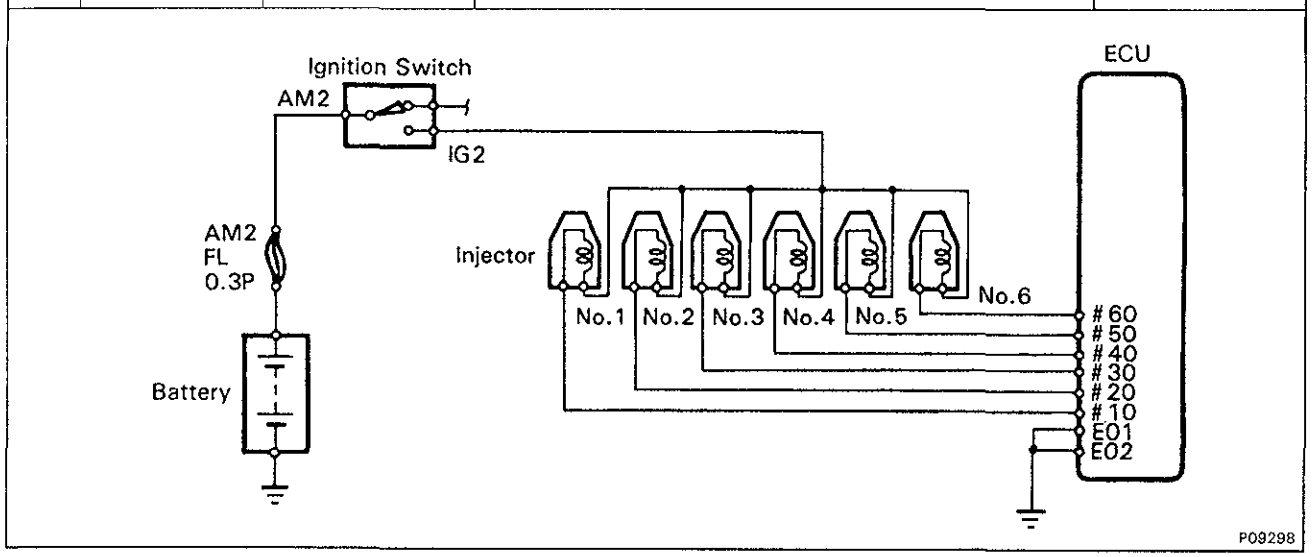

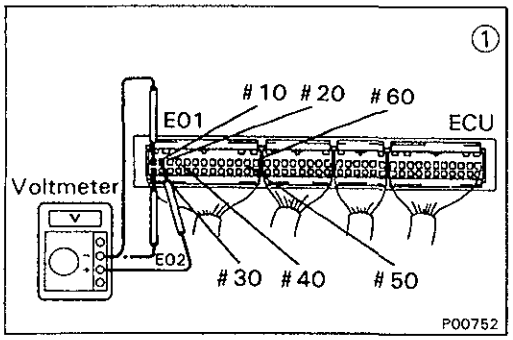

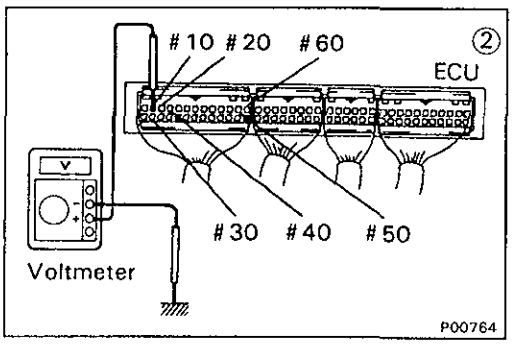

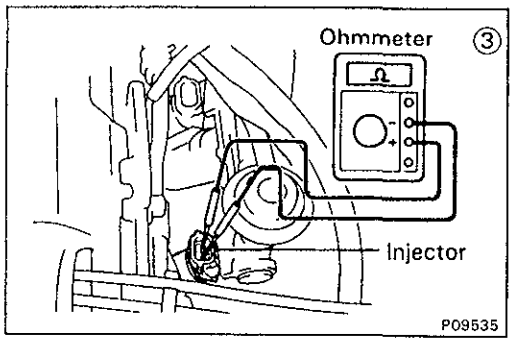

① There is no voltage between ECU terminals #10 ~ #60 and E01 and/or E02. **(IG SW ON)**

↓

② Check that there is voltage between ECU terminal #10 ~ #60 and body ground.

- NO → Check fusible link and ignition switch.
- OK → Check wiring between ECU terminal E01 and/or E02 and body ground.
  - OK → Try another ECU.
  - BAD → Repair or replace.

Check fusible link and ignition switch.
- BAD → Repair or replace.
- OK ↓

③ Check resistance of each injector.
STD resistance: Approx. 13.8 Ω
- OK ↓
- BAD → Replace injector.

Check wiring between ECU terminal #10 ~ #60 and battery.
- BAD → Repair or replace.

EG

No.	Terminals	Trouble	Condition		STD voltage
5	THA — E2	No voltage	IG SW ON	Intake air temperature 20 °C (68 °F)	0.5 — 3.4 V

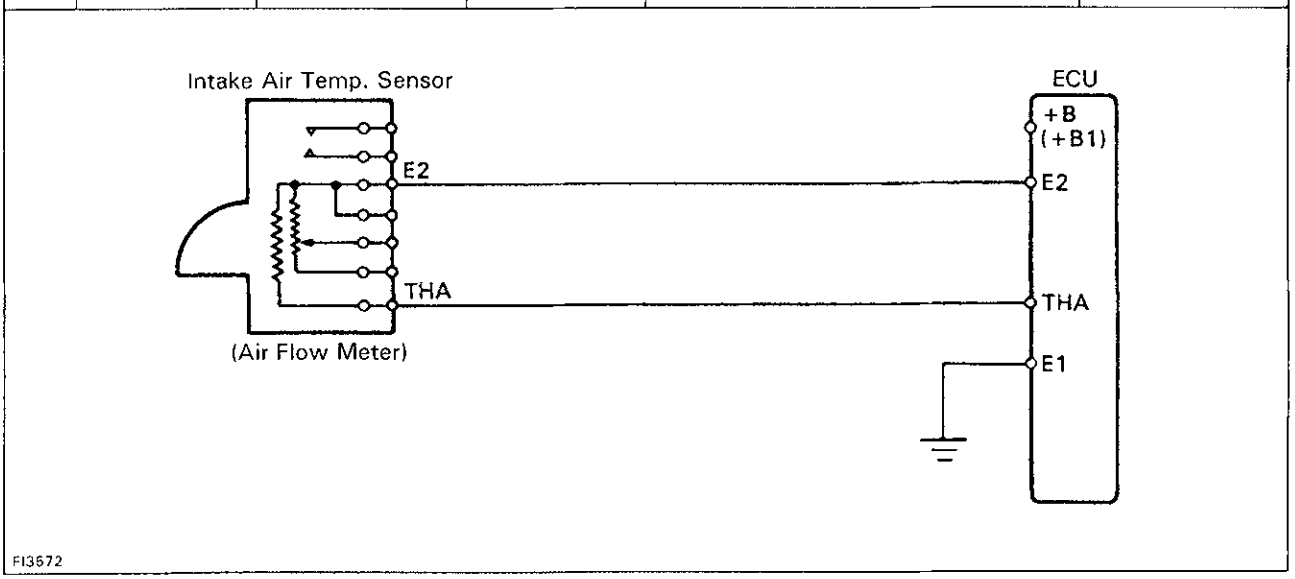

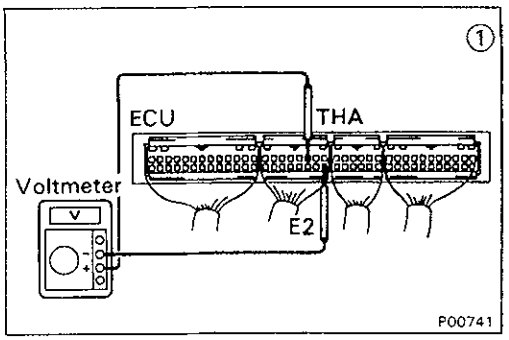

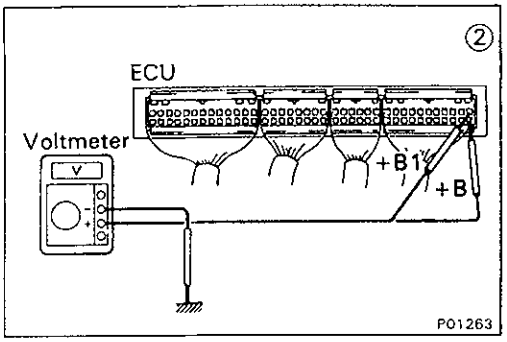

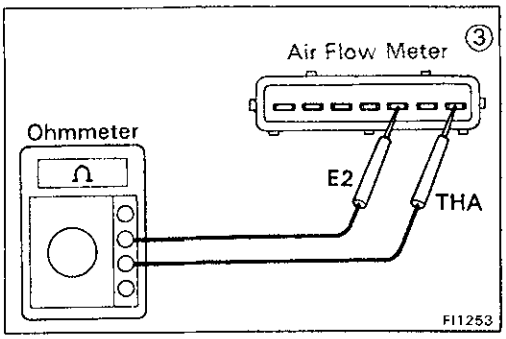

① There is no voltage between ECU terminals THA and E2. **(IG SW ON)**

↓

② Check that there is voltage between ECU terminal +B (+B1) and body ground. **(IG SW ON)**

- NO → Refer to No.1 (See page EG-203)
- OK ↓

Check wiring between ECU terminal E1 and body ground.

- BAD → Repair or replace.
- OK ↓

③ Check Intake air temp. sensor. (See page EG-268)

- BAD → Replace Air Flow meter.
- OK ↓

Check wiring between ECU and Intake air temp. sensor.

- BAD → Repair or replace.
- OK ↓

Try another ECU.

No.	Terminals	Trouble	Condition		STD voltage
6	THW – E2	No voltage	IG SW ON	Engine coolant temperature 80 °C (176 °F)	0.2 – 1.0 V

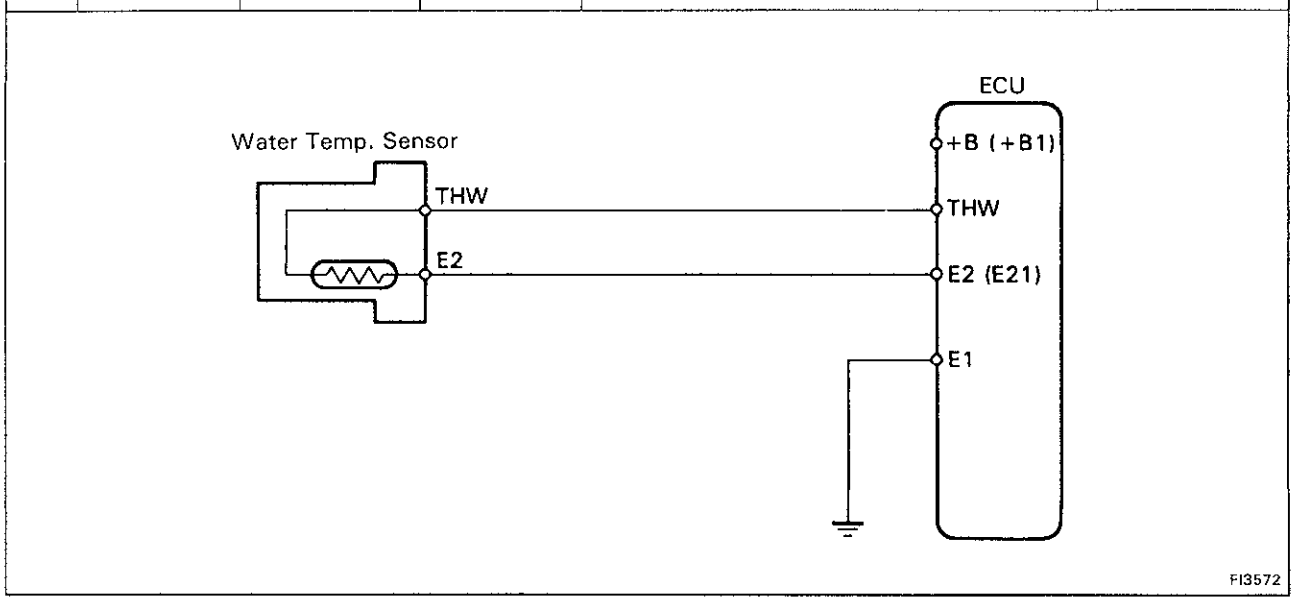

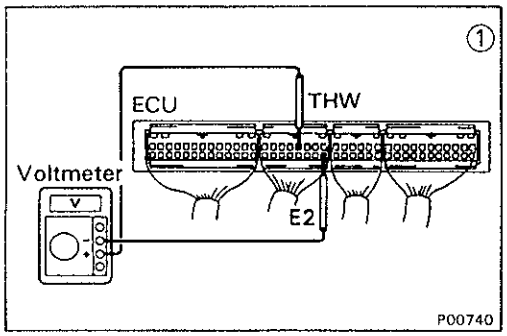

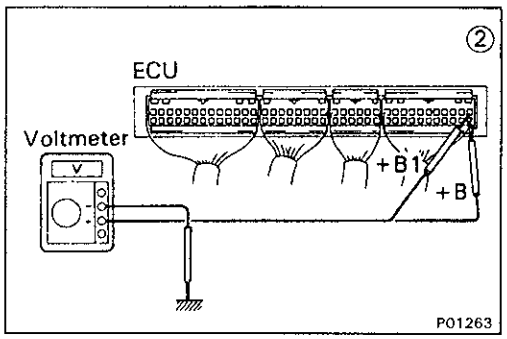

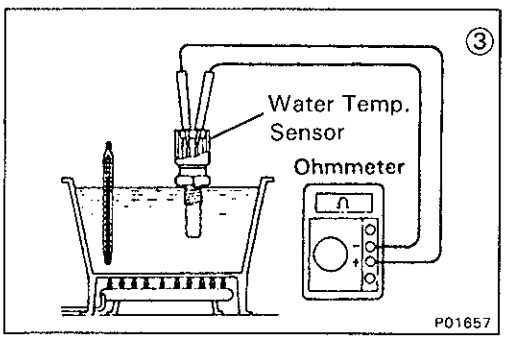

① There is no voltage between ECU terminals THW and E2. **(IG SW ON)**

↓

② Check that there is voltage between ECU terminal +B (+B1) and body ground. **(IG SW ON)**

- OK → Check wiring between ECU terminal E1 and body ground.
- NO → Refer to No.1 (See page EG-203)

Check wiring between ECU terminal E1 and body ground.

- OK → ③ Check Water temp. sensor. (See page EG-275)
- BAD → Repair or replace.

③ Check Water temp. sensor. (See page EG-275)

- BAD → Replace Water temp. sensor.
- OK → Check wiring between ECU and ECT sensor.

Check wiring between ECU and ECT sensor.

- OK → Try another ECU.
- BAD → Repair or replace.

EG

No.	Terminals	Trouble	Condition	STD voltage
8	STA - E1	No voltage	Cranking	6 V or more

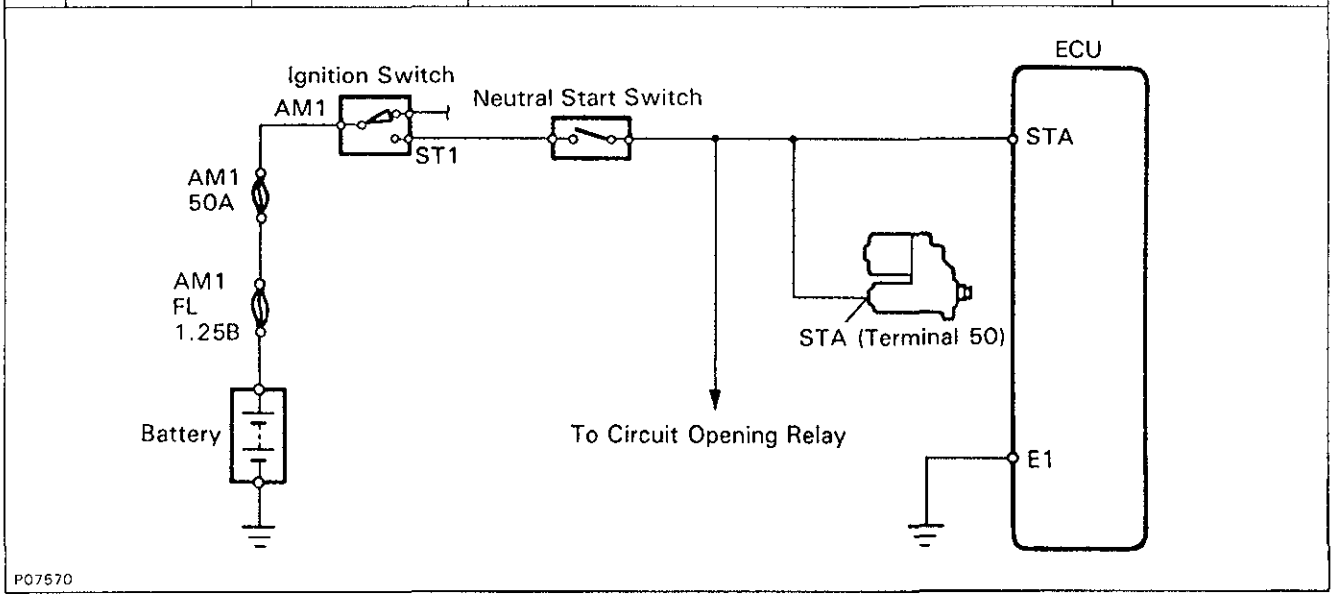

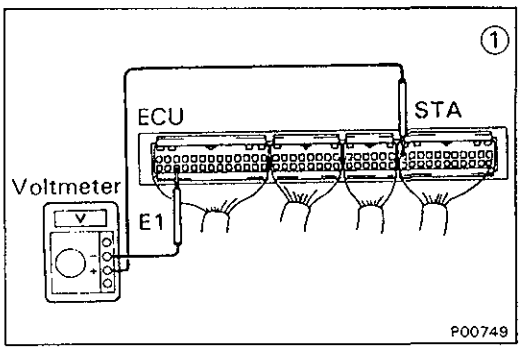

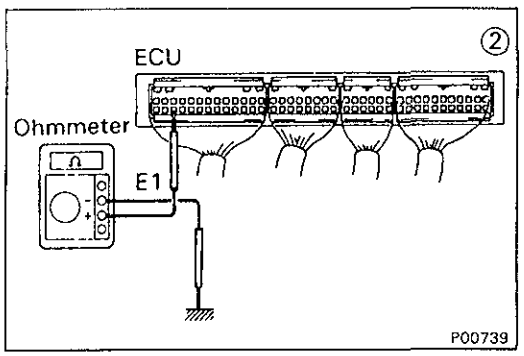

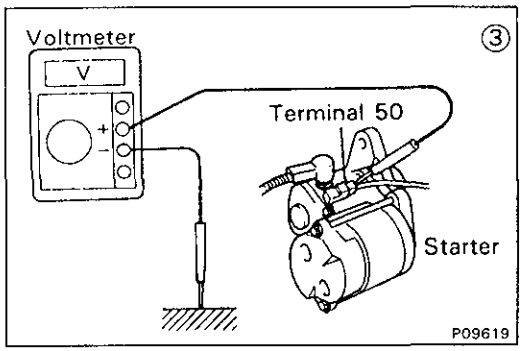

① There is no voltage between ECU terminals STA and E1. **(IG SW START)**

Check starter operation.
- OK → Check wiring between ECU terminal STA and ignition switch terminal ST1.
  - OK → ② Check wiring between ECU terminal E1 and body ground.
    - OK → Try another ECU.
    - BAD → Repair or replace.
  - BAD → Repair or replace.
- BAD → Check H-fuse, fusible link, battery, wiring, ignition switch and neutral start switch.
  - BAD → Repair or replace.
  - OK → ③ Check that there is voltage at starter terminal 50. **(IG SW START) STD voltage: 6 V or more**
    - OK → Check starter.
    - NO → Check wiring between ignition switch terminal ST1 and starter terminal 50.

W02825

No.	Terminals	Trouble	Condition	STD voltage
8	IGT — E1	No voltage	Idling	Palse generation

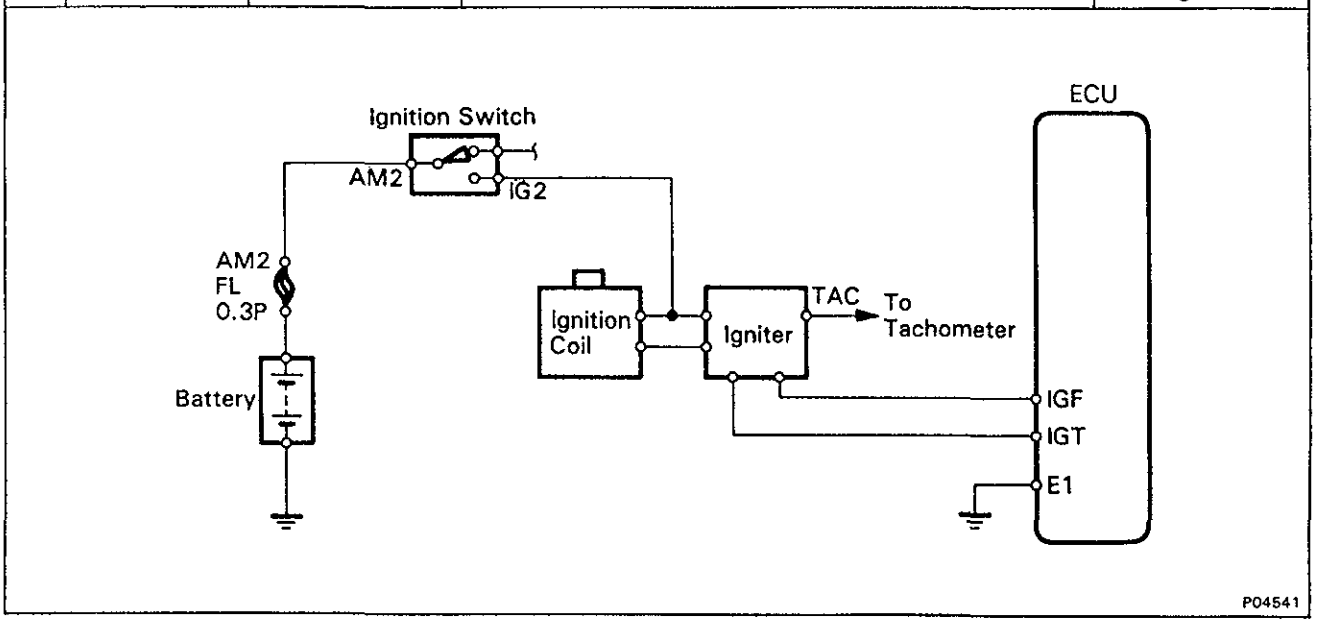

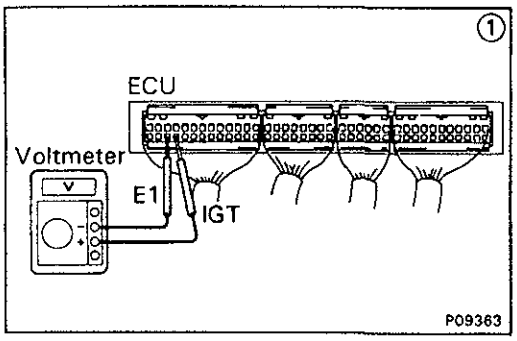

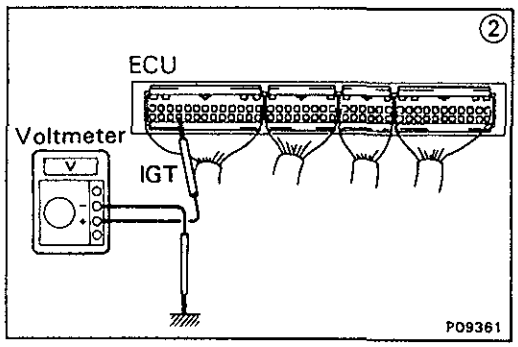

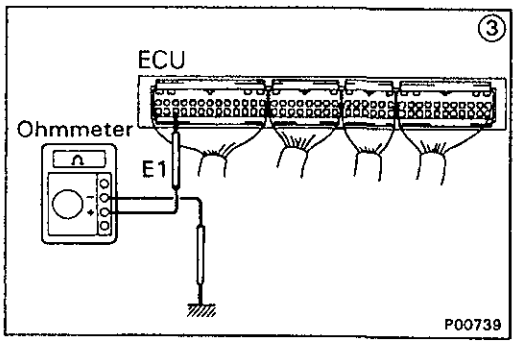

① There is no voltage between ECU terminals IGT and E1. **(Idling)**

↓

② Check that there is voltage between ECU terminal IGT and body ground **(Idling)**

- NO → Check fusible link and ignition switch.
- OK → ③ Check wiring between ECU terminal E1 and body ground.
  - BAD → Repair or replace.
  - OK → Try another ECU.

Check fusible link and ignition switch.
- BAD → Repair or replace.
- OK ↓

Check distributor (See IG section)
- BAD → Repair or replace.
- OK ↓

Check wiring between ECU and battery.
- BAD → Repair or replace.
- OK ↓

Check igniter. (See IG section)
- BAD → Repair or replace.

W02826

No.	Terminals	Trouble	Condition	STD voltage
9	ISC1~ISC4—E1	No voltage	IG SW ON	9 — 14 V

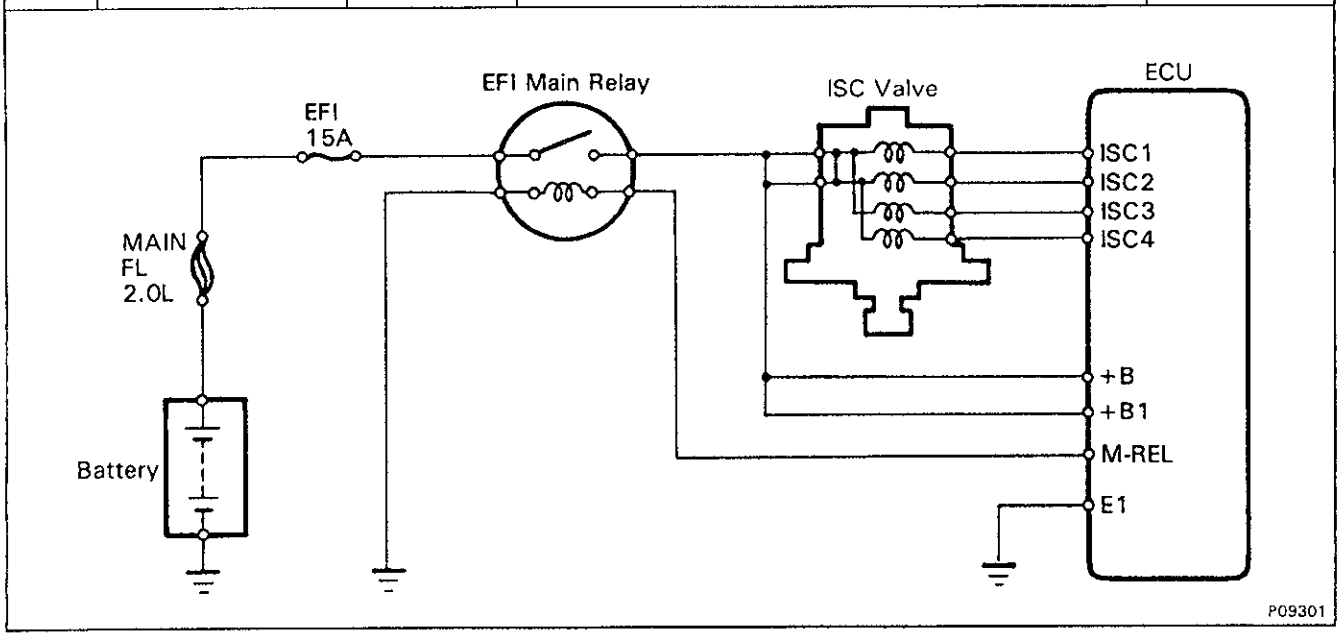

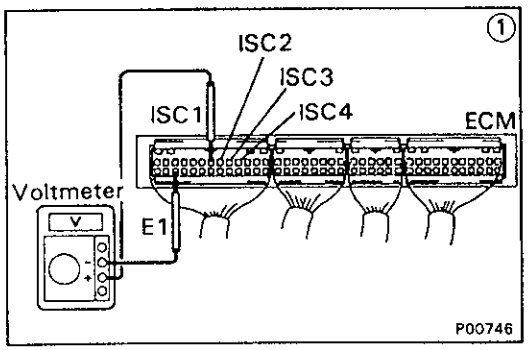

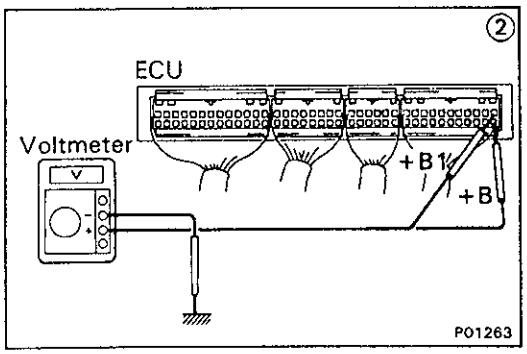

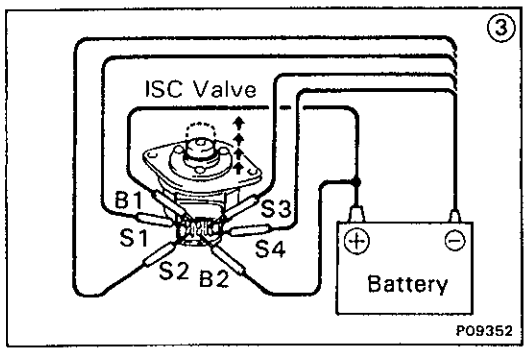

① There is no voltage between ECU terminals ISC1 ~ ISC4 and E1. **(IG SW ON)**

② Check that there is voltage between ECU terminal +B (+B1) and body ground **(IG SW ON)**

- OK → Check wiring between ECU terminal E1 and body ground.
- NO → Refer to No. 1 (See page EG-203)

Check wiring between ECU terminal E1 and body ground.

- OK → ③ Check ISC valve. (See page EG-269)
- BAD → Repair or replace.

③ Check ISC valve. (See page EG-269)

- BAD → Replace ISC valve
- OK → Check wiring between ECU and EFI main relay.

Check wiring between ECU and EFI main relay.

- OK → Try another ECU.
- BAD → Repair or replace.

V02827

No.	Terminals	Trouble	Condition	STD voltage
10	W — E1	No voltage	No trouble (malfunction indicator lamp light off) and engine running.	9 — 14 V

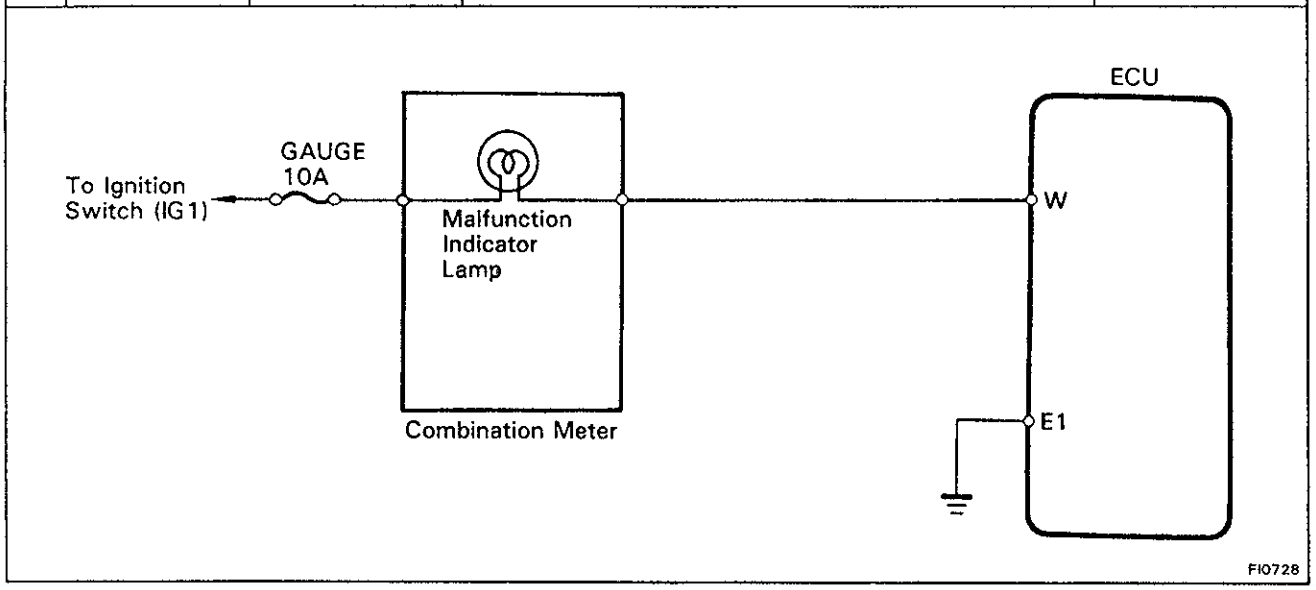

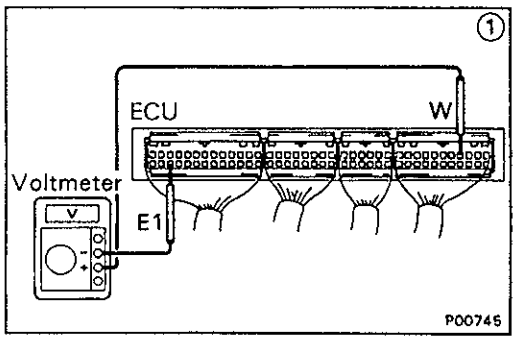

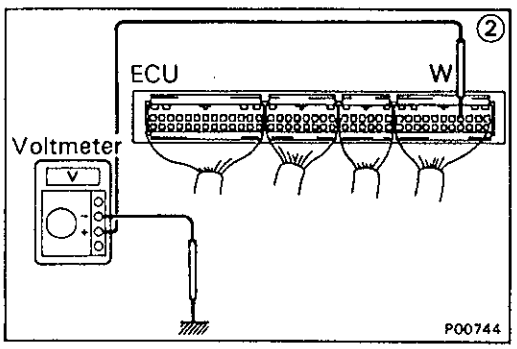

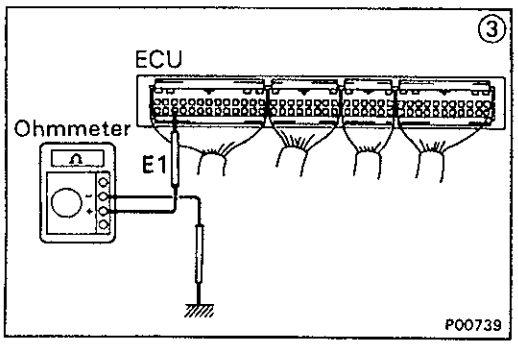

① There is no voltage between ECU terminals W and E1. **(Idling)**

↓

② Check that there is voltage between ECU terminal W and body ground.

- NO → Check GAUGE fuse (10A) and malfunction indicator lamp.
- OK → ③ Check wiring between ECUterminal E1 and body ground.
  - OK → Try another ECU.
  - BAD → Repair or replace.

Check GAUGE fuse (10A) and malfunction indicator lamp.

- OK → Check wiring between ECU terminal W and fuse.
- BAD → Repair or replace.
  - Fuse blows again → Check wiring between ECU terminal W and fuse.
    - BAD → Repair or replace.

V02828

EG

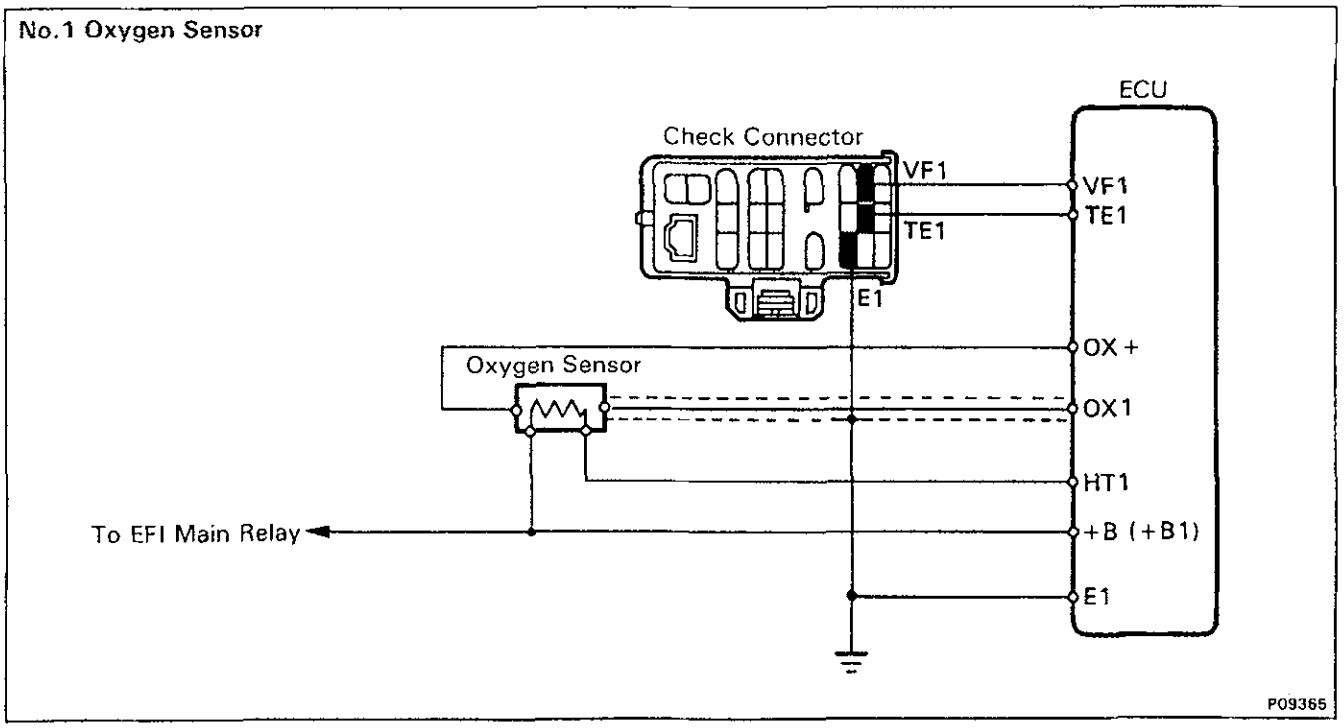

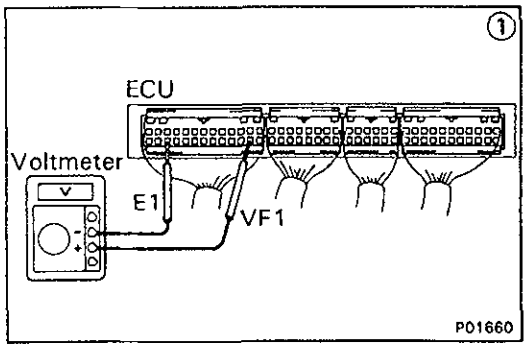

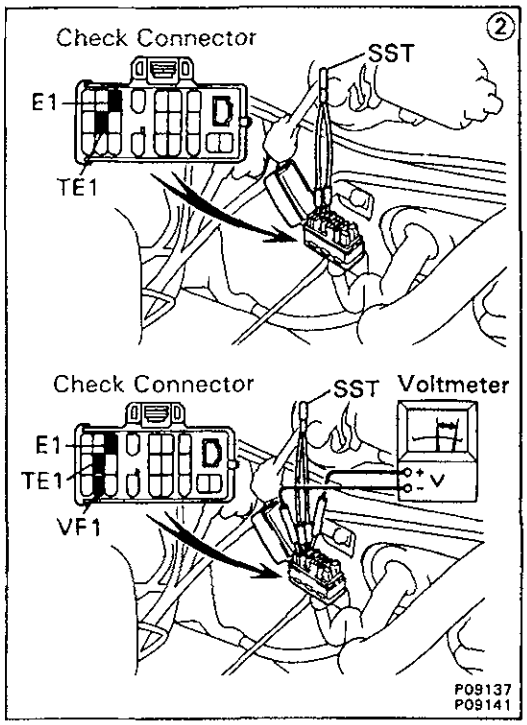

① There is no voltage between ECU terminals VF1 and E1.

Check that there is specified voltage between ECU terminal VF1 and body ground.

- NO → Check for air suction of air into exhaust system.
- OK → Check wiring between ECU terminal E1 and body ground.
  - OK → Try another ECU.
  - BAD → Repair or replace.

Check for air suction of air into exhaust system. — BAD → Repair air suction.
OK ↓

Check for air leak from air induction system. — BAD → Repair air leak.
OK ↓

Check spark plugs. — BAD → Repair or replace.
OK ↓

Check distributor and ignition system. — BAD → Repair or replace.
OK ↓

Check fuel pressure. — BAD → Repair or replace.
OK ↓

Check injectors. — BAD → Repair or replace.
OK ↓

Check air flow meter. — BAD → Repair or replace.
OK ↓

② Check operatin of oxygen sensor. — OK → System normal.
BAD ↓

Check wiring between oxygen sensor and ECU connectors. — BAD → Repair wiring.
OK ↓

Repair oxygen sensor.

V02829

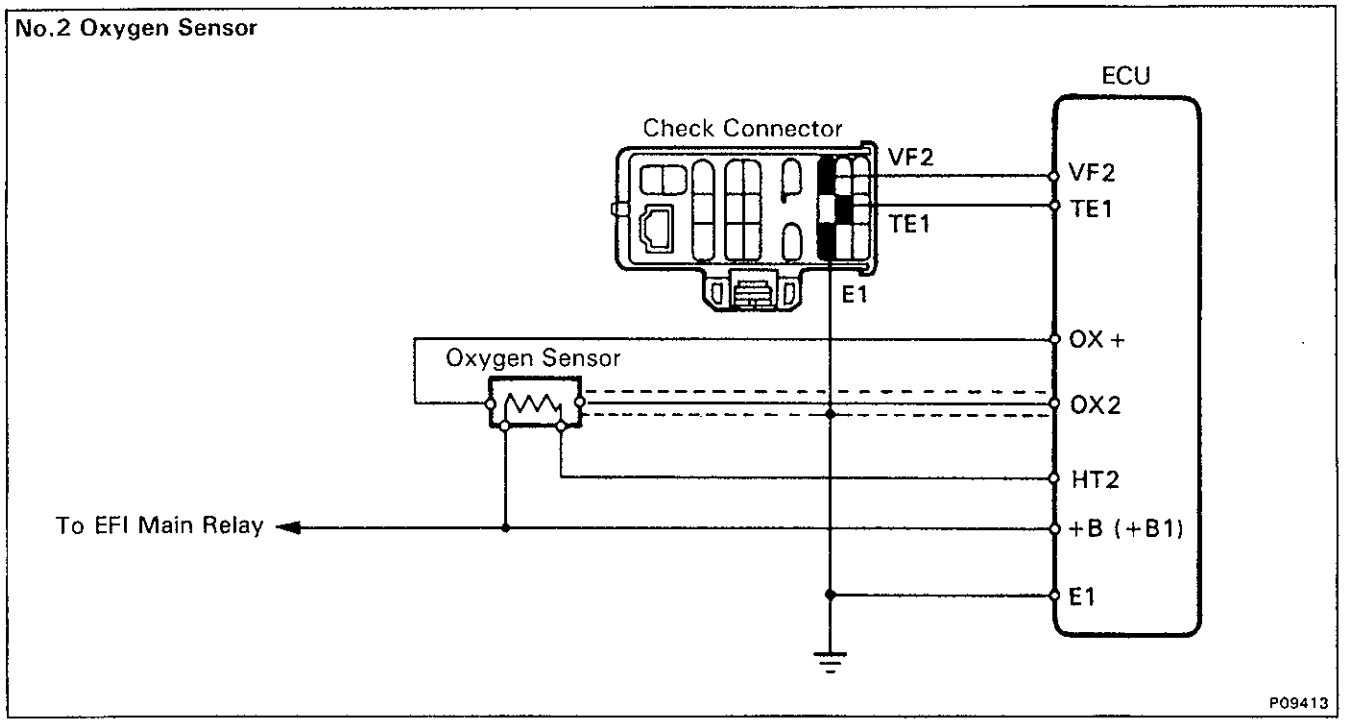

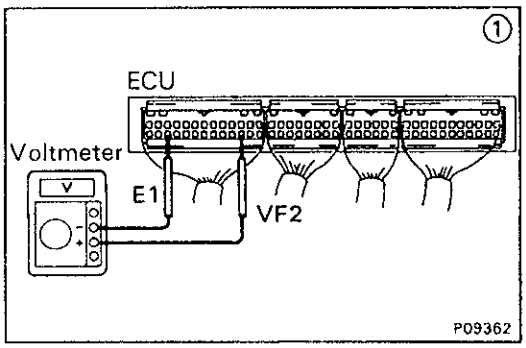

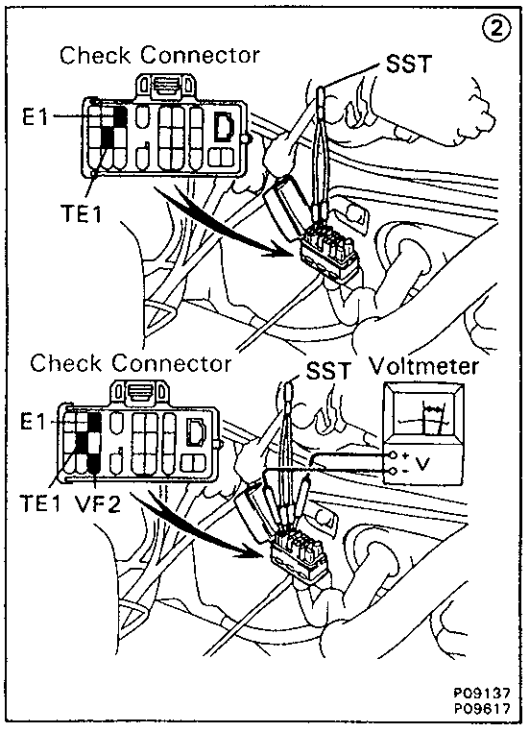

① There is no voltage between ECU terminals VF2 and E1.

Check that there is specified votage between ECU terminal VF2 and body ground.

NO → OK

Check wiring between ECU terminal E1 and body ground.

OK → Try another ECU.

BAD → Repair or replace.

Check for air suction of air into exhaust system. BAD → Repair air suction.

OK

Check for air leak from air induction system. BAD → Repair air leak.

OK

Check spark plugs. BAD → Repair or replace.

OK

Check distributor and ignition system. BAD → Repair or replace.

OK

Check fuel pressure. BAD → Repair or replace.

OK

Check injectors. BAD → Repair or replace.

OK

Check air flow meter. BAD → Repair or replace.

OK

② Check operatin of oxygen sensor. OK → System normal.

BAD

Check wiring between oxygen sensor and ECU connectors. BAD → Repair wiring.

OK

Repair oxygen sensor.

V02830