ENGINE UNIT

COMPONENTS

EM1EC–01

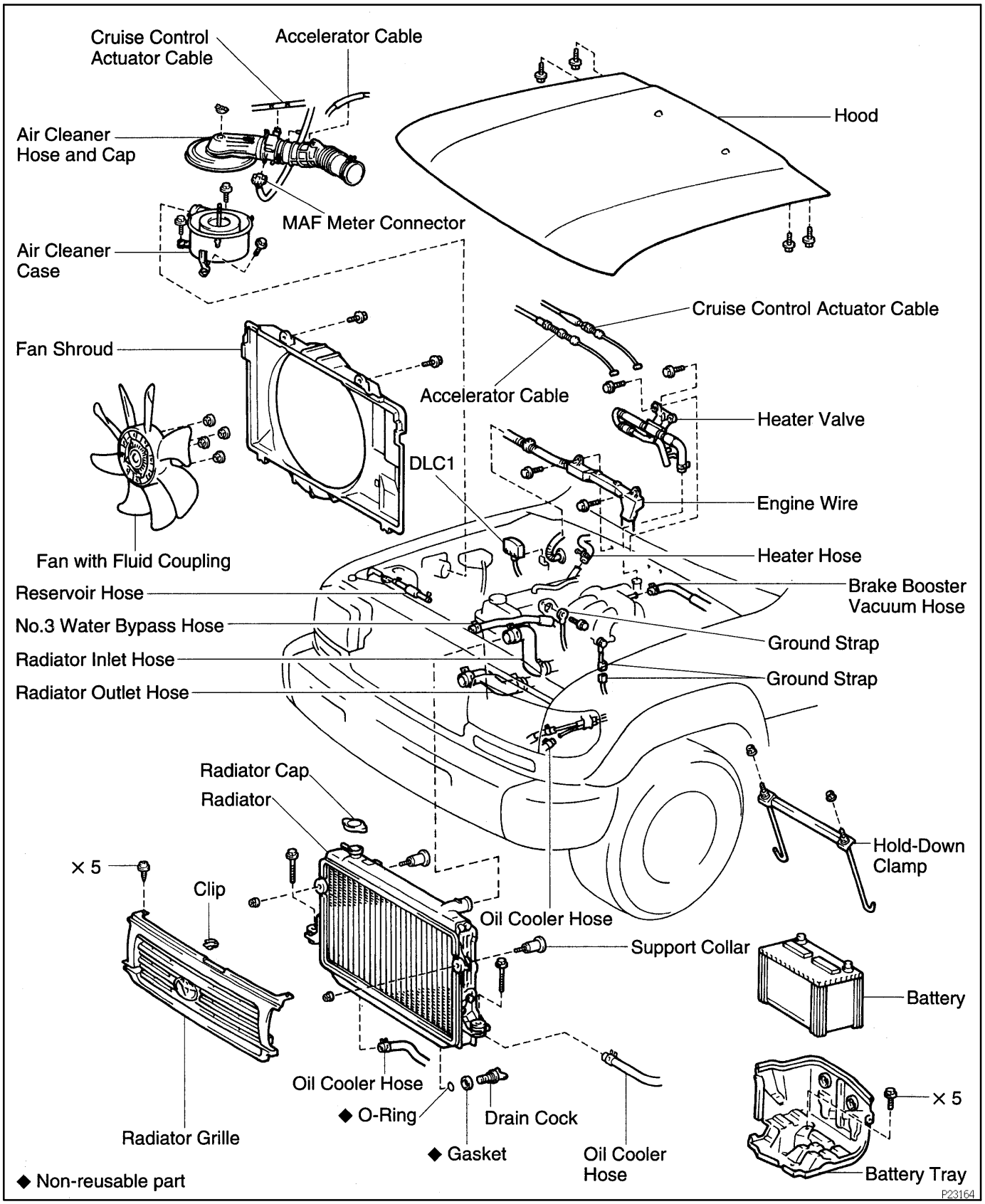

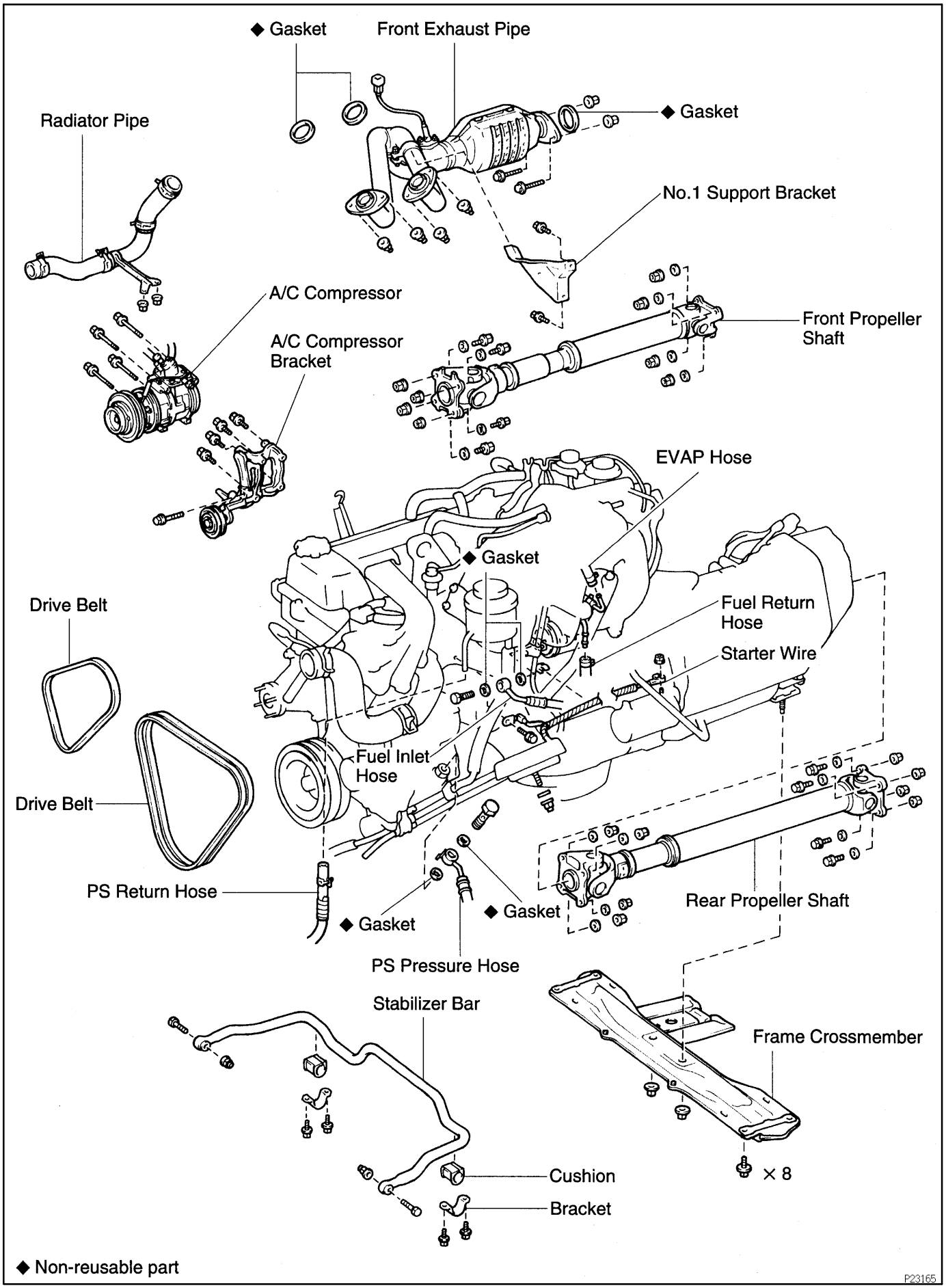
◆ Gasket
Front Exhaust Pipe
◆ Gasket
Radiator Pipe
No.1 Support Bracket
A/C Compressor
Front Propeller Shaft
A/C Compressor Bracket
EVAP Hose
◆ Gasket
Drive Belt
Fuel Return Hose
Starter Wire
Fuel Inlet Hose
Drive Belt
PS Return Hose
◆ Gasket
◆ Gasket
Rear Propeller Shaft
PS Pressure Hose
Stabilizer Bar
Frame Crossmember
Cushion
× 8
Bracket
◆ Non-reusable part
P23165

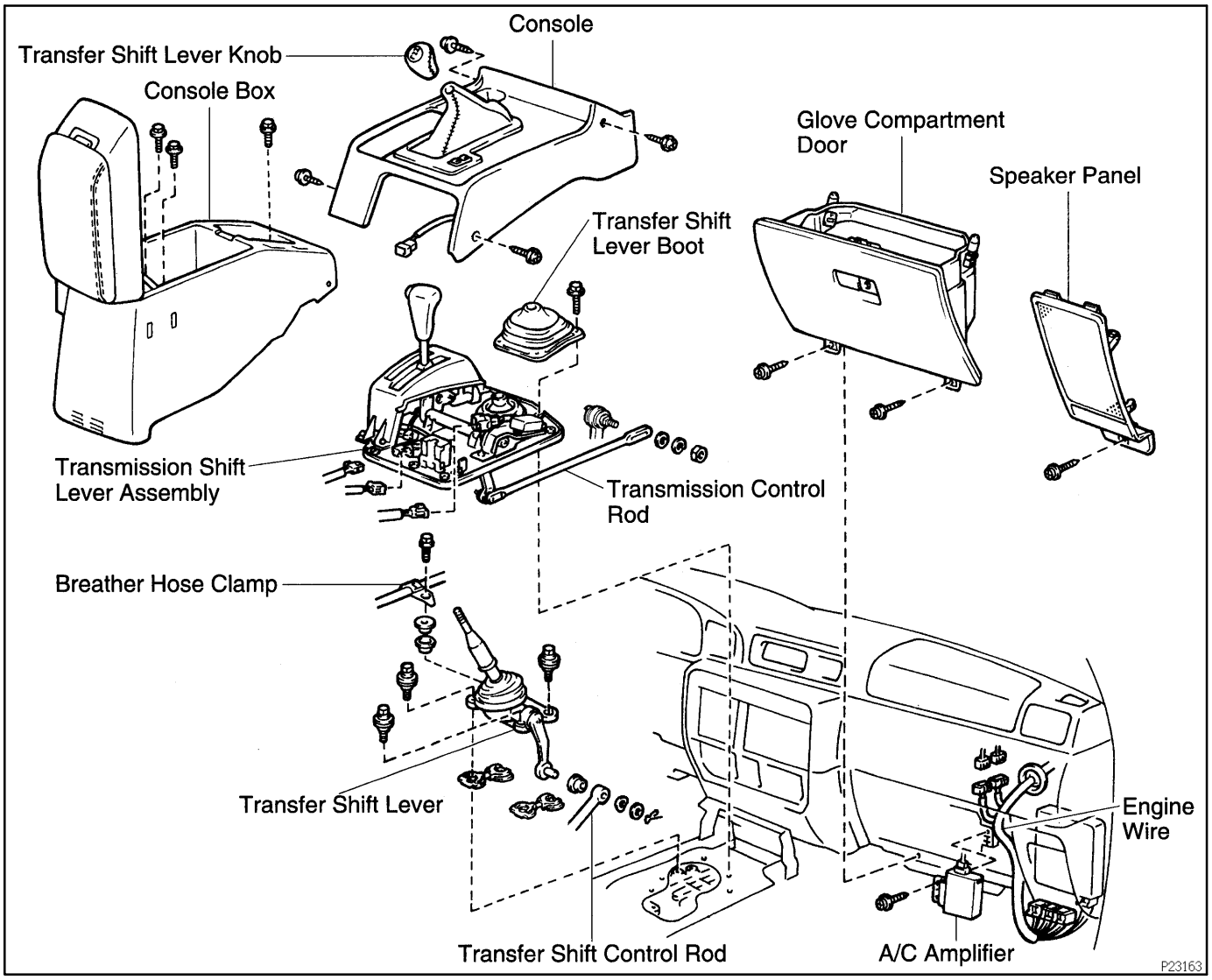
Console
Transfer Shift Lever Knob
Console Box
Glove Compartment Door
Speaker Panel
Transfer Shift Lever Boot
Transmission Shift Lever Assembly
Transmission Control Rod
Breather Hose Clamp
Transfer Shift Lever
Engine Wire
Transfer Shift Control Rod
A/C Amplifier
P23163

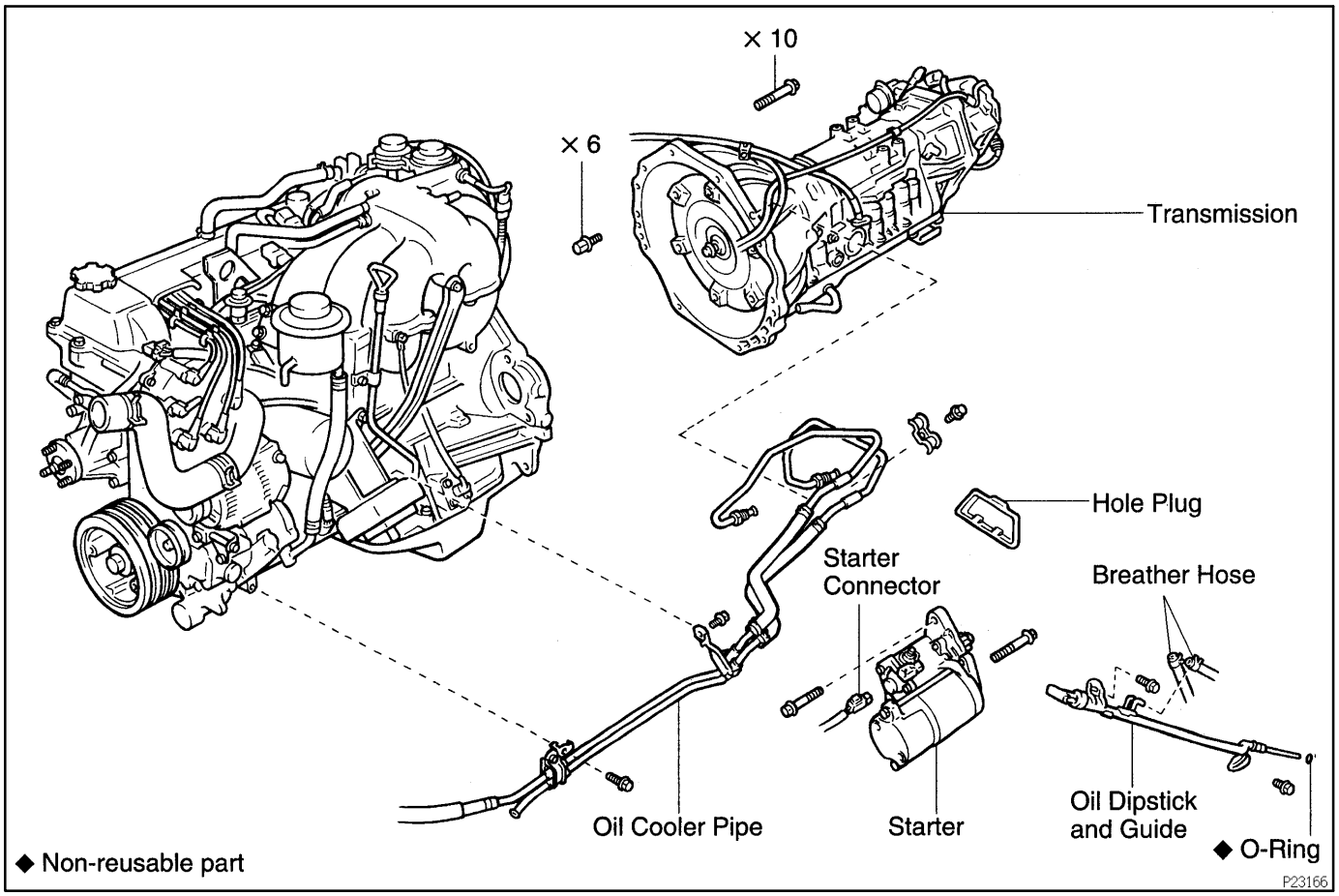
× 10
× 6
Transmission
Hole Plug
Starter
Connector
Breather Hose
Oil Cooler Pipe
Starter
Oil Dipstick
and Guide
◆ O-Ring
◆ Non-reusable part
P23166