SF0XZ–04
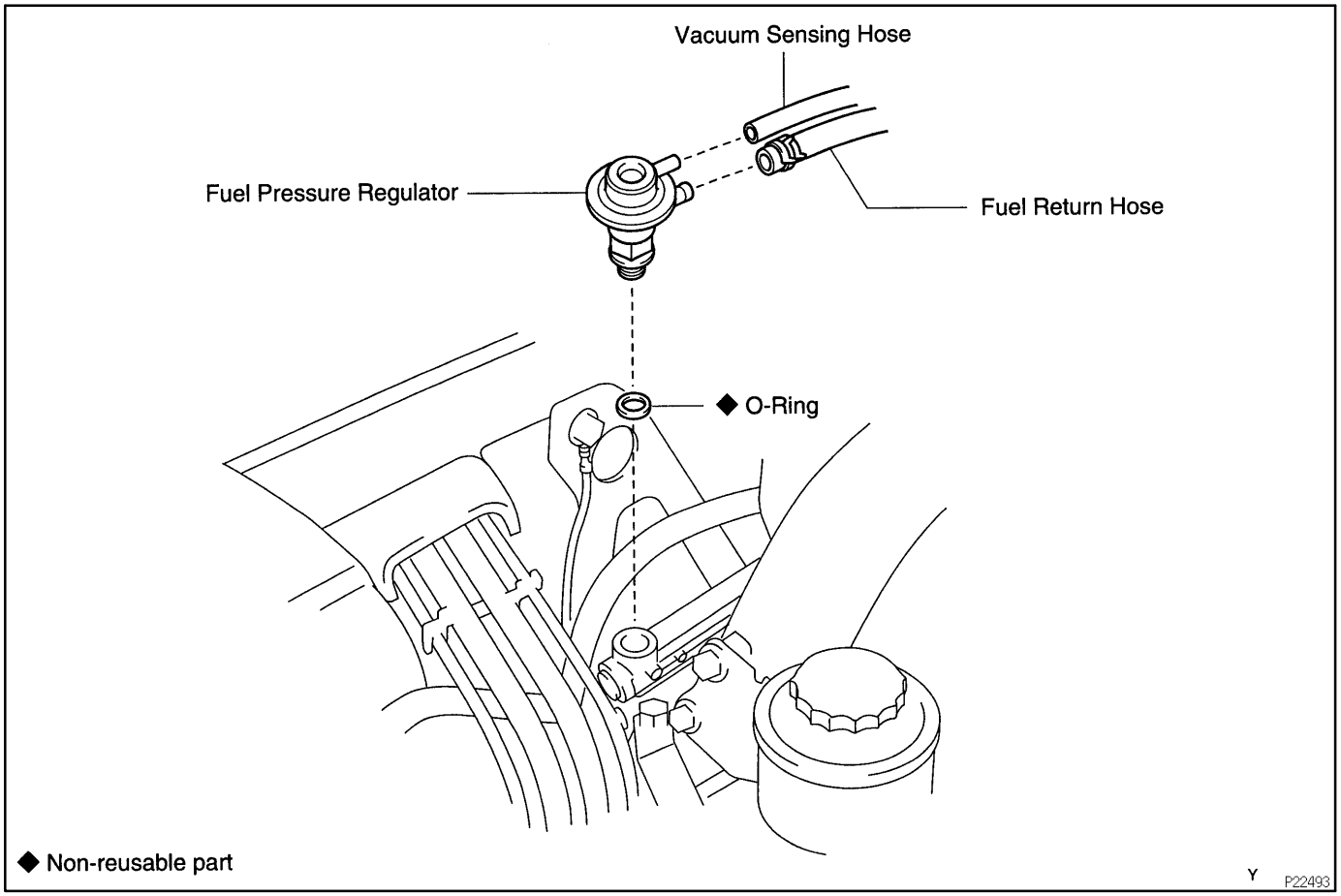
COMPONENTS