POWER DOOR LOCK CONTROL SYSTEM

LOCATION
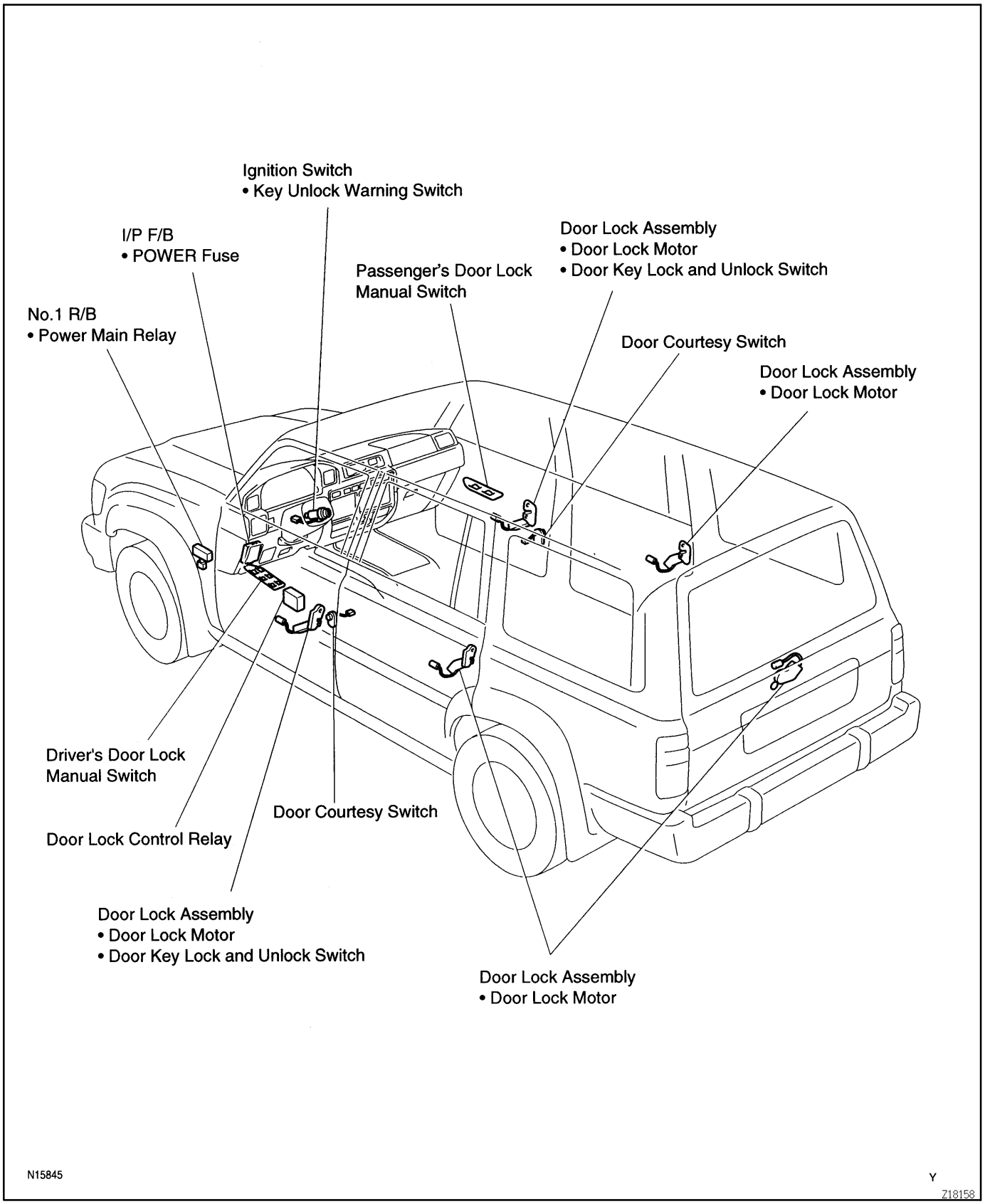
BE1MI–01