SLIDING ROOF

COMPONENTS

BO390–01

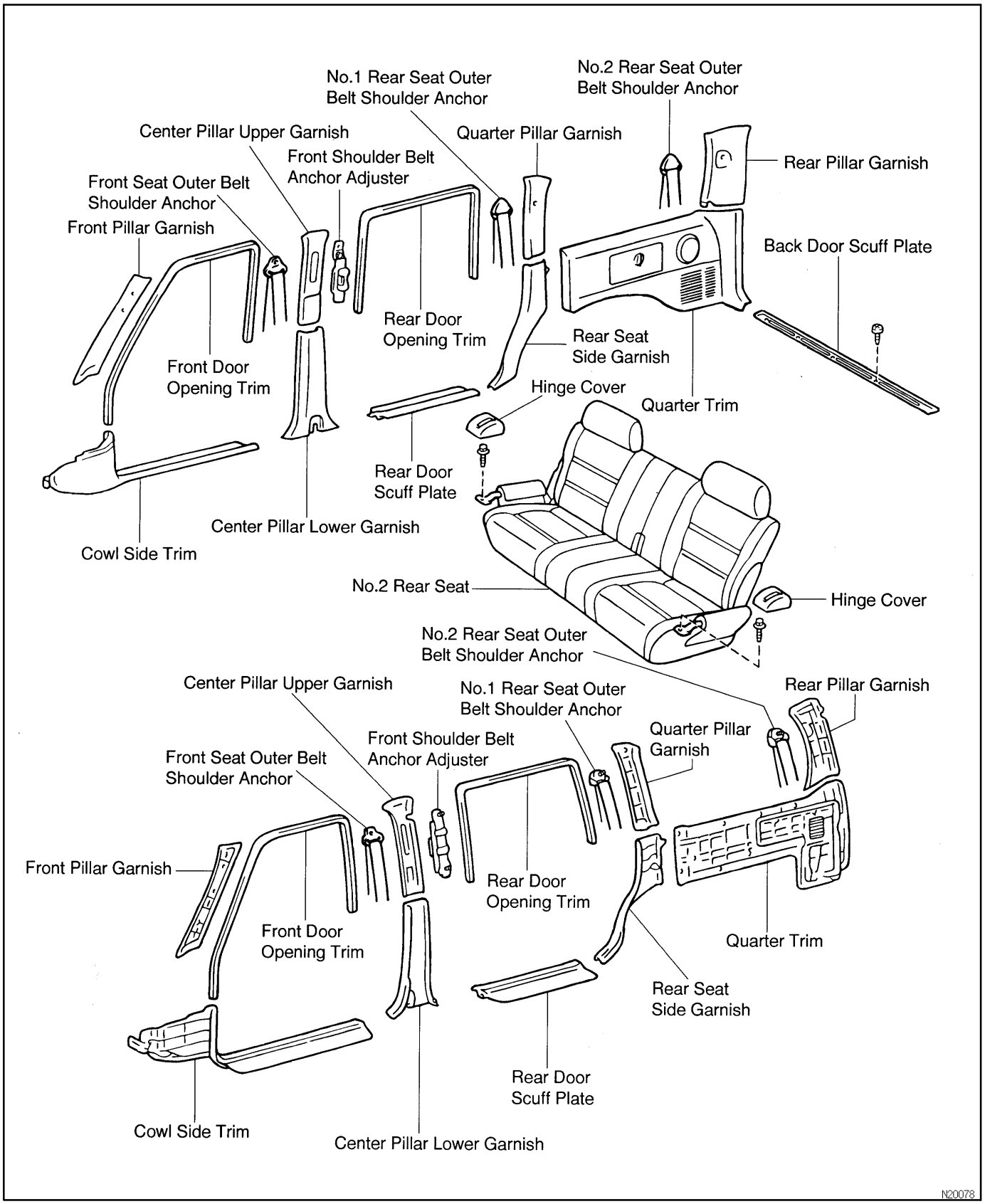

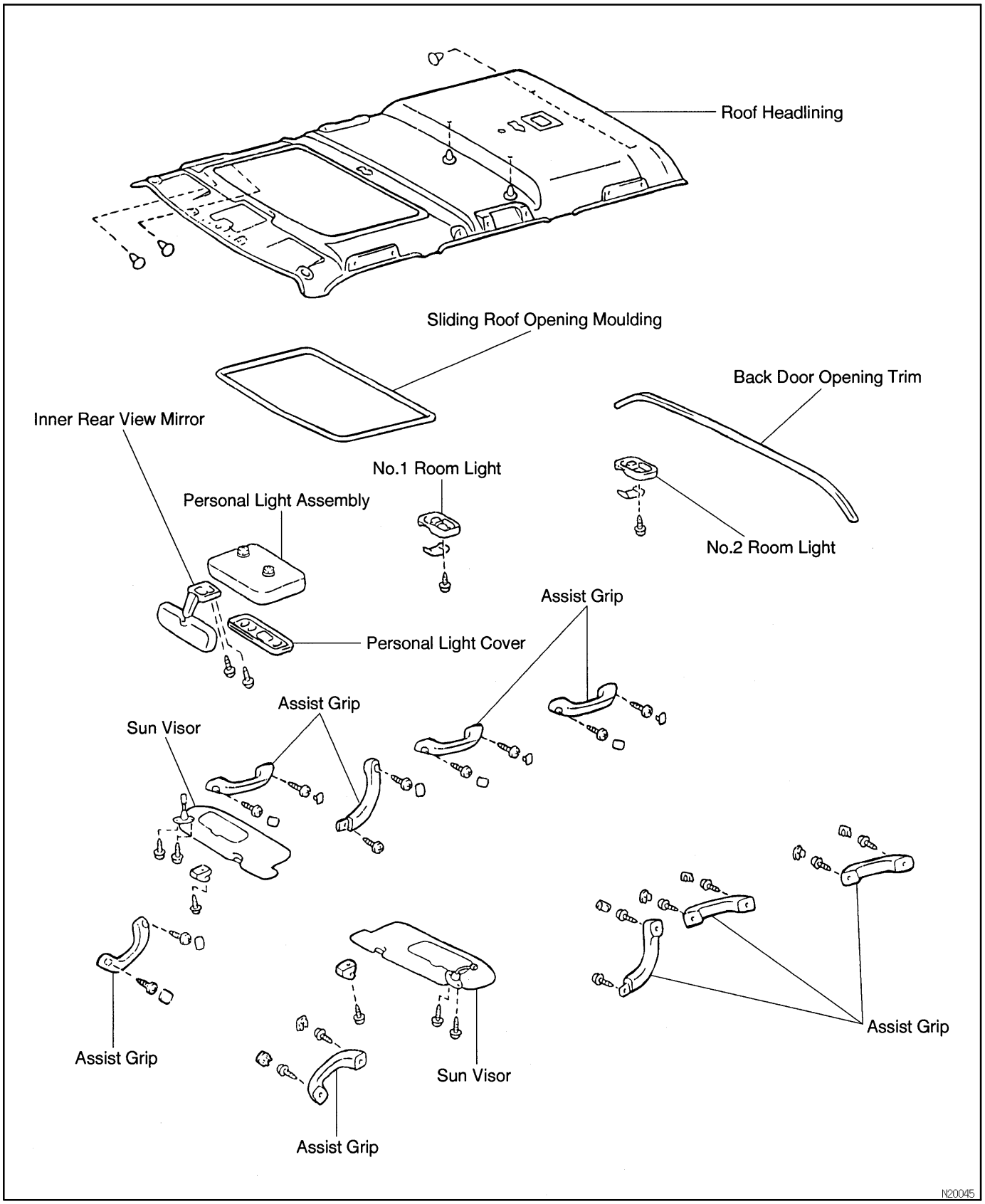
Roof Headlining
Sliding Roof Opening Moulding
Back Door Opening Trim
Inner Rear View Mirror
No.1 Room Light
Personal Light Assembly
No.2 Room Light
Assist Grip
Personal Light Cover
Assist Grip
Sun Visor
Assist Grip
Assist Grip
Sun Visor
Assist Grip
N20045

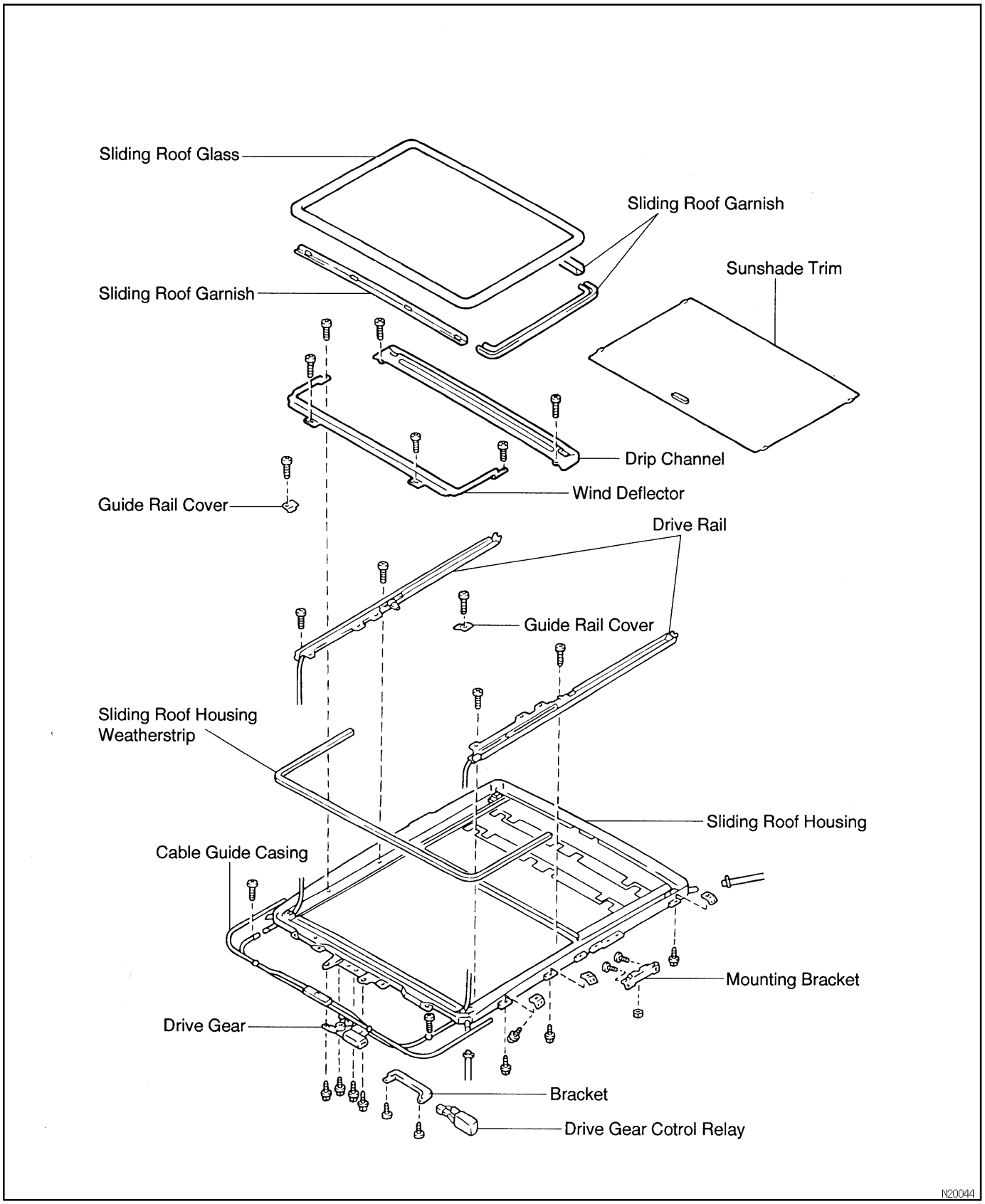
Sliding Roof Glass
Sliding Roof Garnish
Sunshade Trim
Sliding Roof Garnish
Drip Channel
Wind Deflector
Guide Rail Cover
Drive Rail
Guide Rail Cover
Sliding Roof Housing
Weatherstrip
Sliding Roof Housing
Cable Guide Casing
Mounting Bracket
Drive Gear
Bracket
Drive Gear Cotrol Relay
N20044