GENERATOR

COMPONENTS

CH06H–05

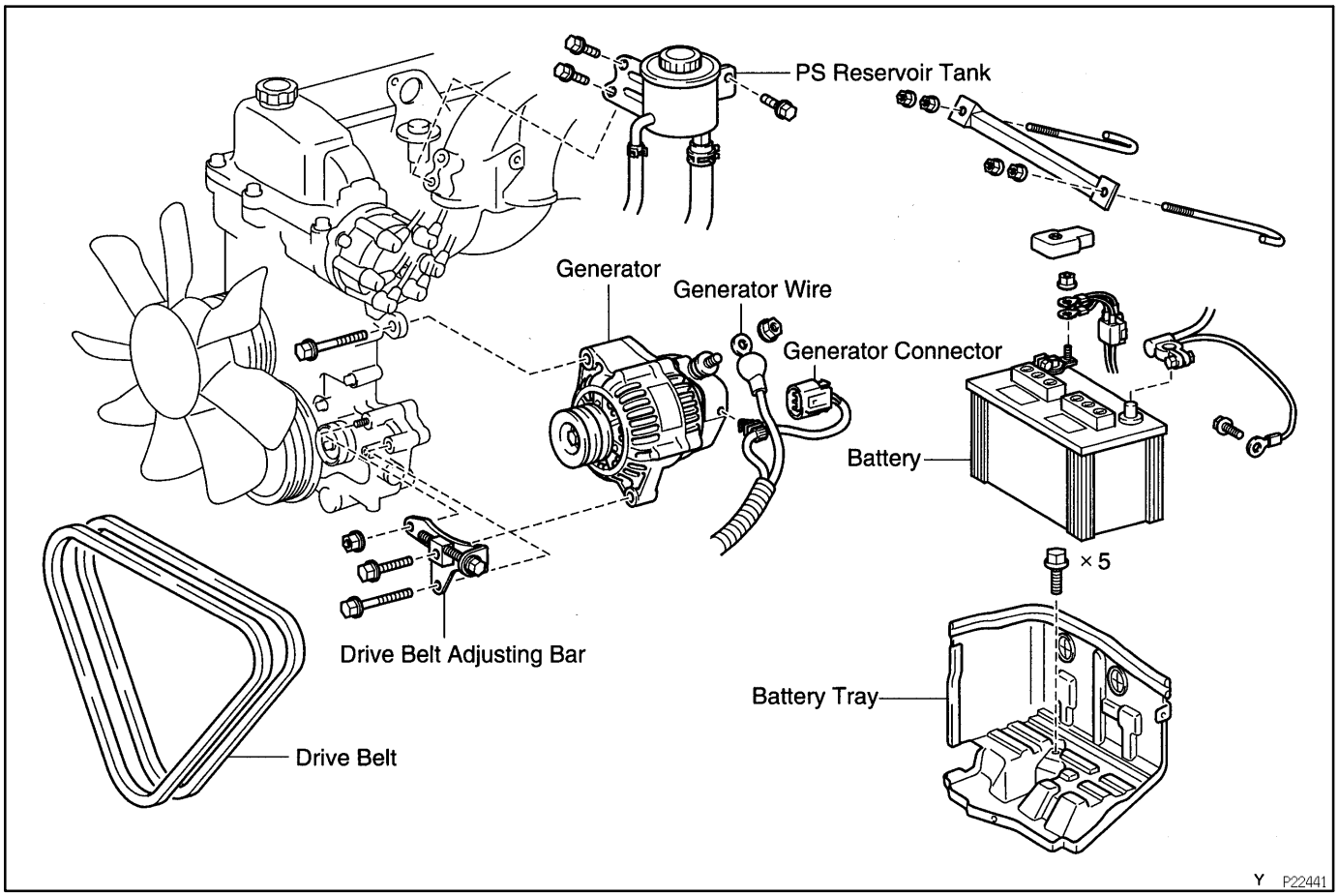

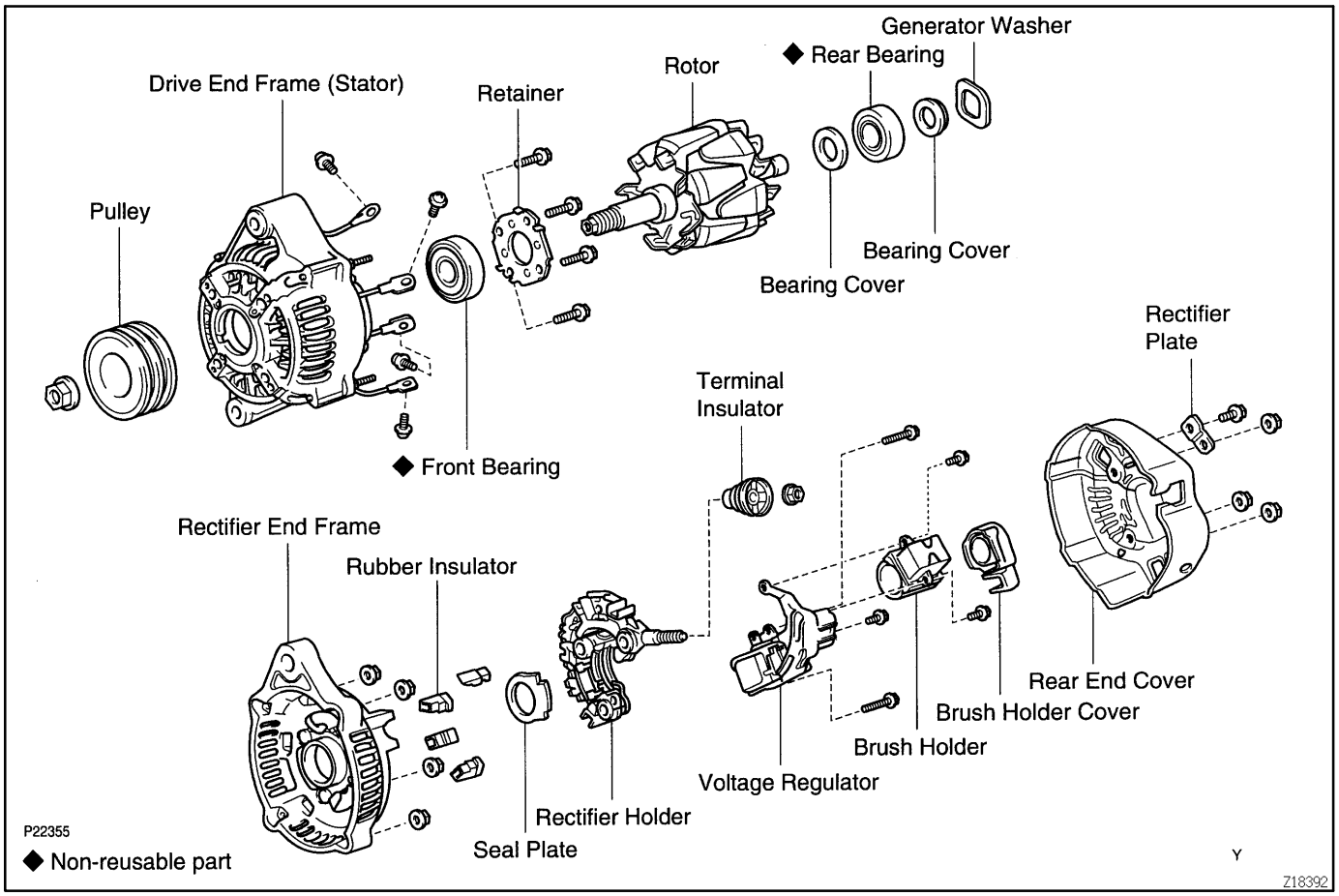
Generator Washer
◆ Rear Bearing
Rotor
Drive End Frame (Stator)
Retainer
Pulley
Bearing Cover
Bearing Cover
Rectifier Plate
Terminal Insulator
◆ Front Bearing
Rectifier End Frame
Rubber Insulator
Rear End Cover
Brush Holder Cover
Brush Holder
Voltage Regulator
Rectifier Holder
Seal Plate
P22355
◆ Non-reusable part
Y
Z18392