CYLINDER HEAD

COMPONENTS

EM1E2–01

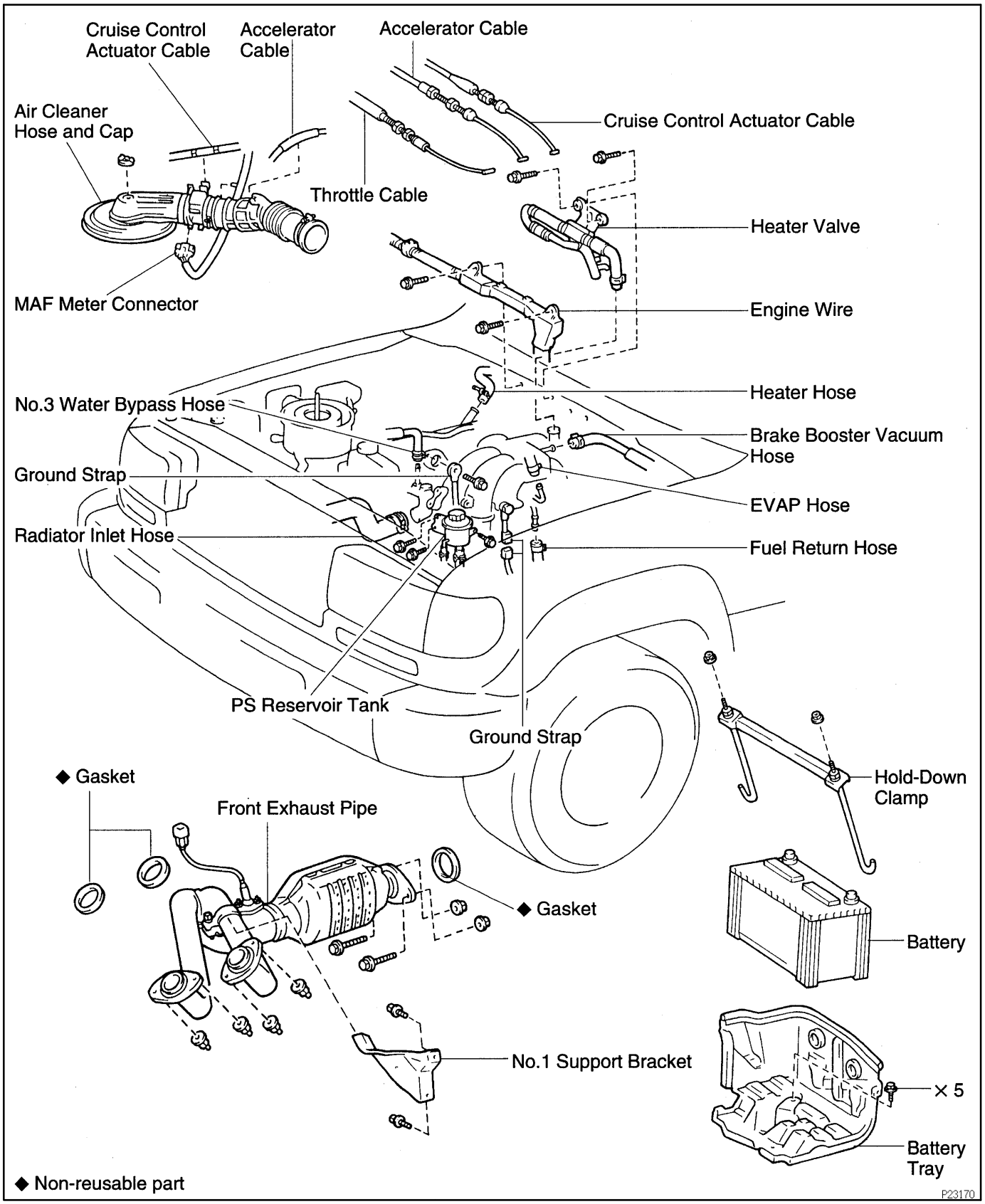

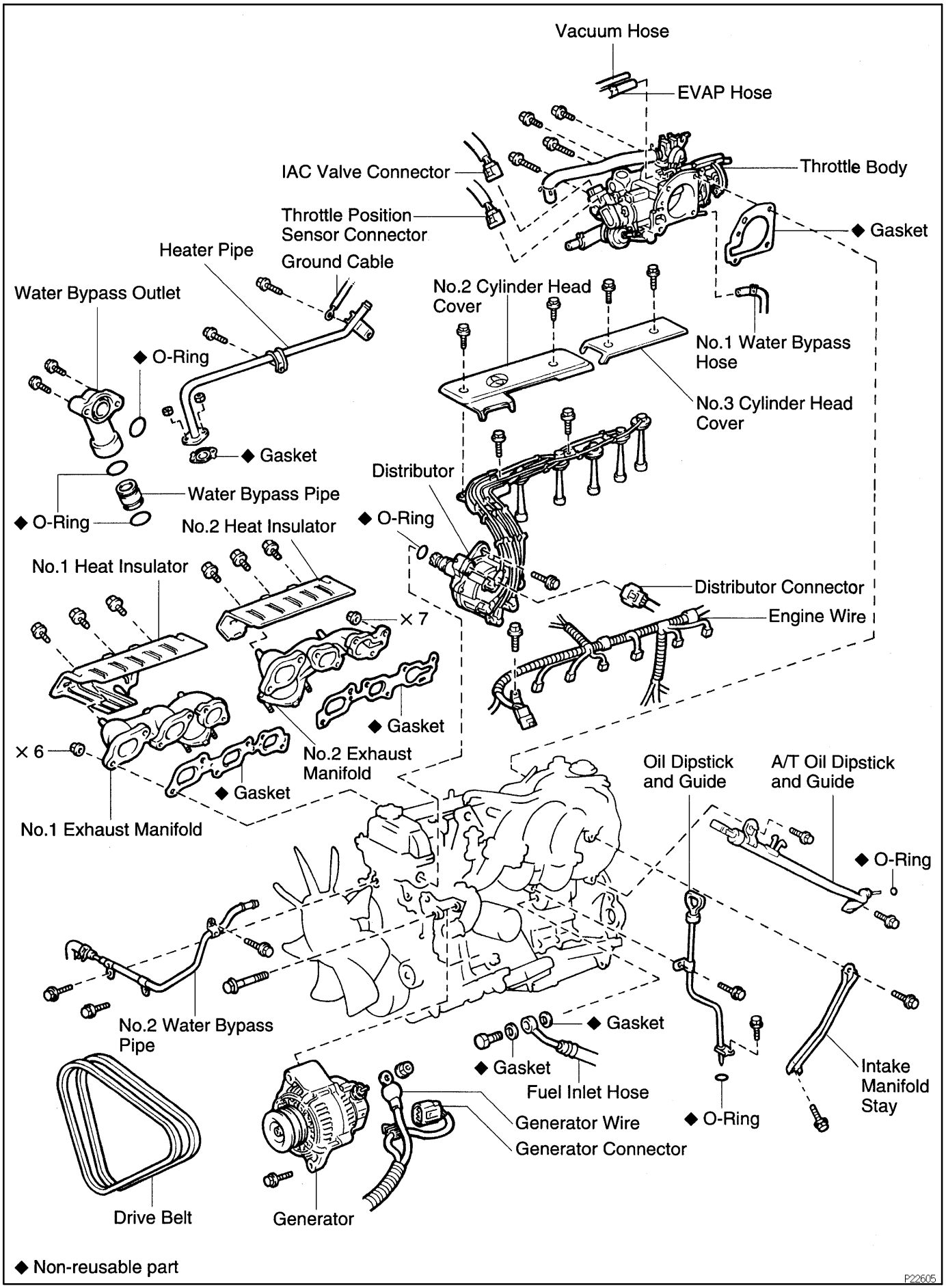
Vacuum Hose
EVAP Hose
IAC Valve Connector
Throttle Body
Throttle Position Sensor Connector
◆ Gasket
Heater Pipe
Ground Cable
Water Bypass Outlet
No.2 Cylinder Head Cover
◆ O-Ring
No.1 Water Bypass Hose
No.3 Cylinder Head Cover
◆ Gasket
Distributor
Water Bypass Pipe
◆ O-Ring
No.2 Heat Insulator
◆ O-Ring
No.1 Heat Insulator
Distributor Connector
× 7
Engine Wire
◆ Gasket
× 6
No.2 Exhaust Manifold
◆ Gasket
No.1 Exhaust Manifold
Oil Dipstick and Guide
A/T Oil Dipstick and Guide
◆ O-Ring
No.2 Water Bypass Pipe
◆ Gasket
◆ Gasket
Fuel Inlet Hose
Intake Manifold Stay
Generator Wire
◆ O-Ring
Generator Connector
Drive Belt
Generator
◆ Non-reusable part
P22605

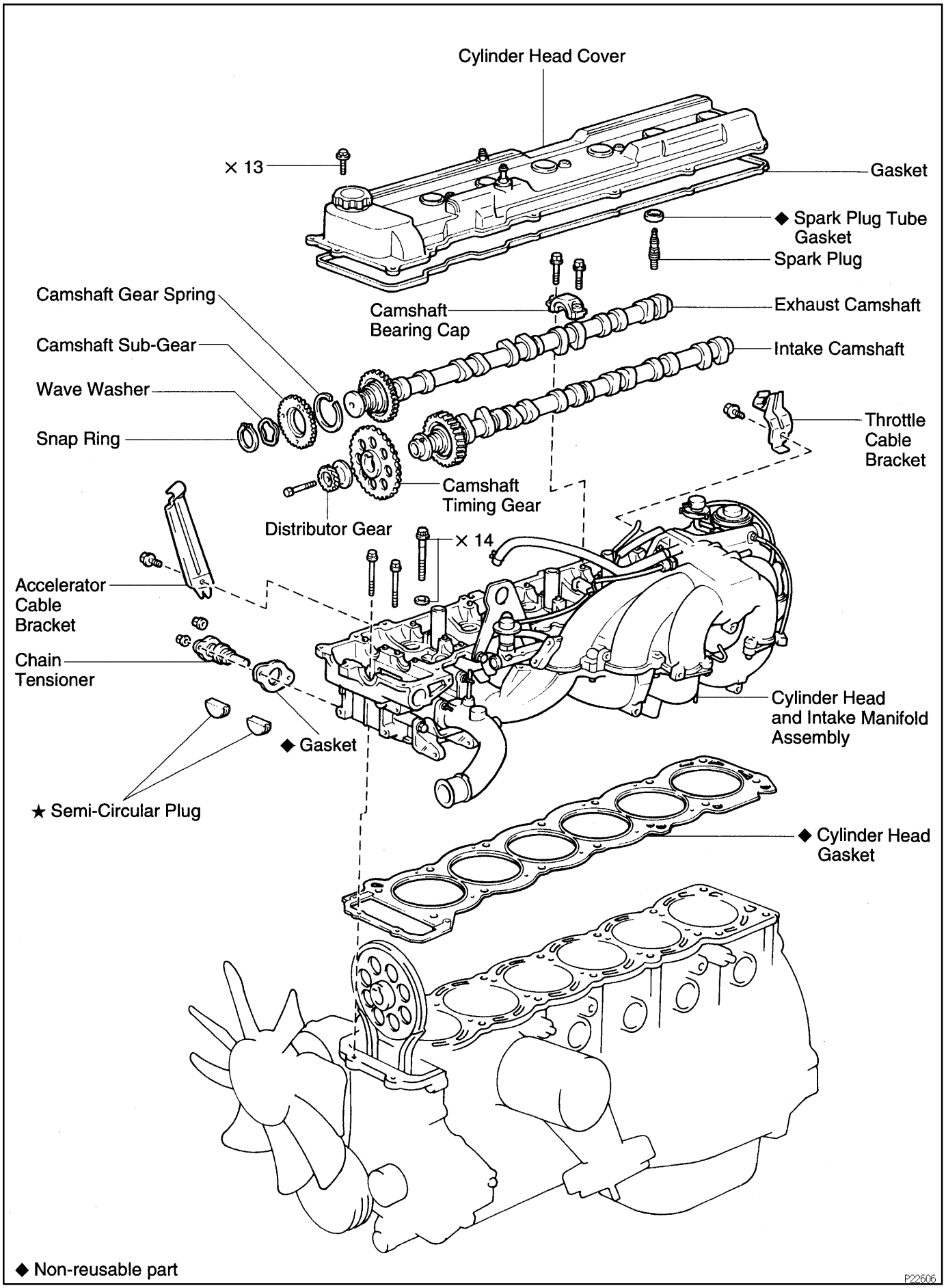
Cylinder Head Cover
× 13
Gasket
◆ Spark Plug Tube Gasket
Spark Plug
Camshaft Gear Spring
Camshaft Bearing Cap
Exhaust Camshaft
Camshaft Sub-Gear
Intake Camshaft
Wave Washer
Snap Ring
Throttle Cable Bracket
Camshaft Timing Gear
Distributor Gear
× 14
Accelerator Cable Bracket
Chain Tensioner
Cylinder Head and Intake Manifold Assembly
◆ Gasket
★ Semi-Circular Plug
◆ Cylinder Head Gasket
◆ Non-reusable part
P22606

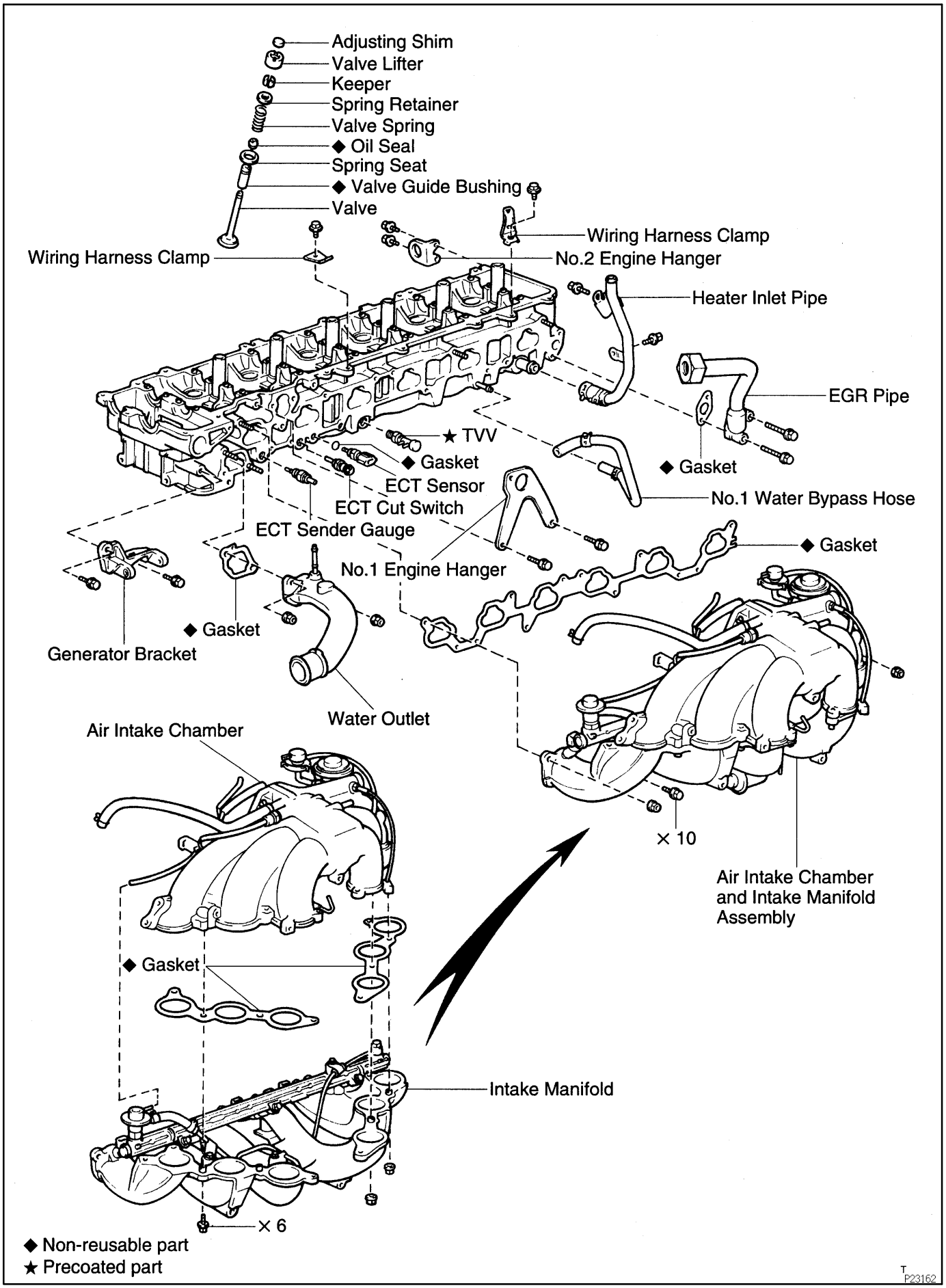
Adjusting Shim
Valve Lifter
Keeper
Spring Retainer
Valve Spring
◆ Oil Seal
Spring Seat
◆ Valve Guide Bushing
Valve
Wiring Harness Clamp
Wiring Harness Clamp
No.2 Engine Hanger
Heater Inlet Pipe
EGR Pipe
★ TVV
◆ Gasket
◆ Gasket
ECT Sensor
ECT Cut Switch
ECT Sender Gauge
No.1 Water Bypass Hose
No.1 Engine Hanger
◆ Gasket
◆ Gasket
Generator Bracket
Water Outlet
Air Intake Chamber
× 10
Air Intake Chamber and Intake Manifold Assembly
◆ Gasket
Intake Manifold
× 6
◆ Non-reusable part
★ Precoated part
T P23162