SF1EF-01

COMPONENTS

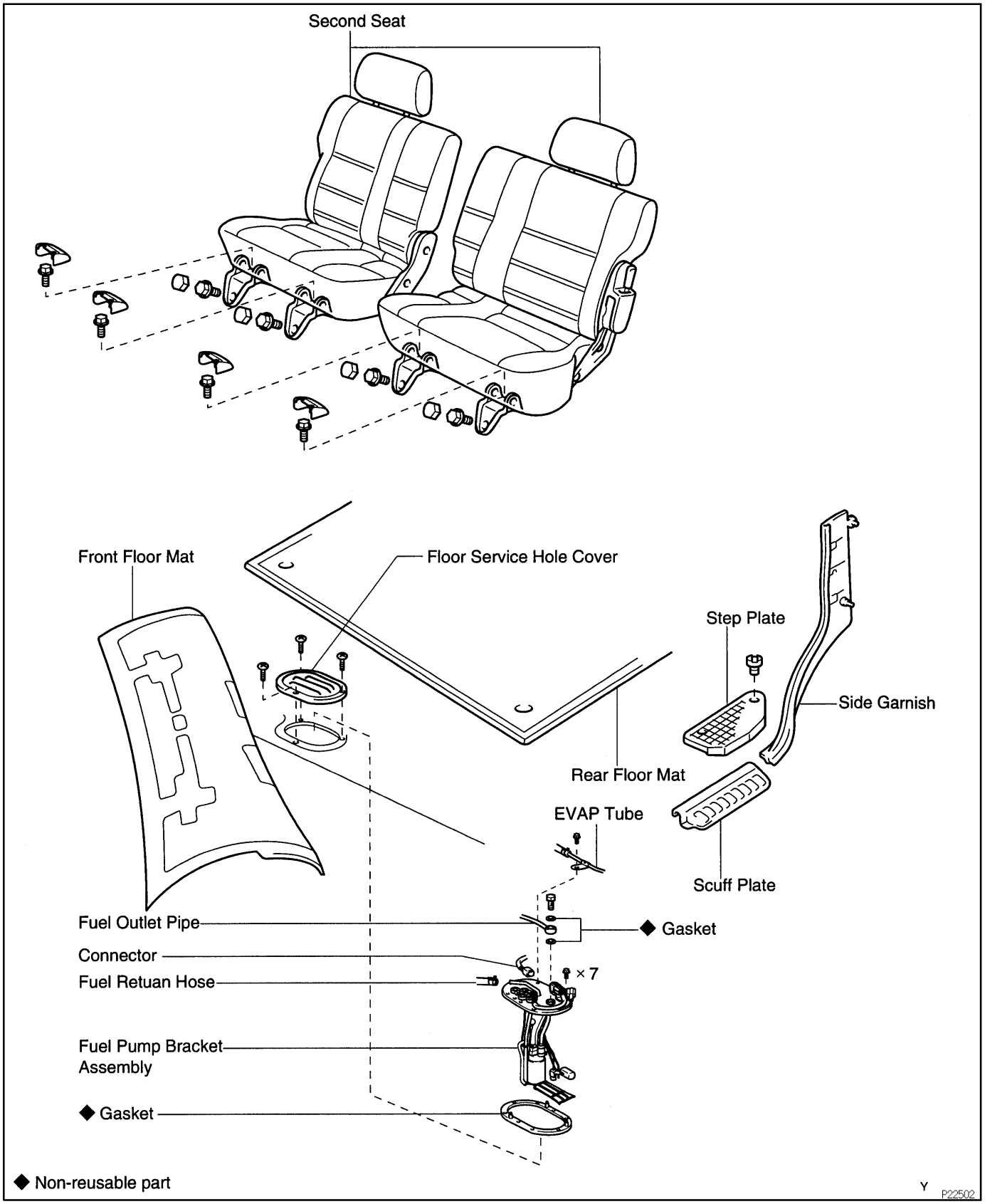

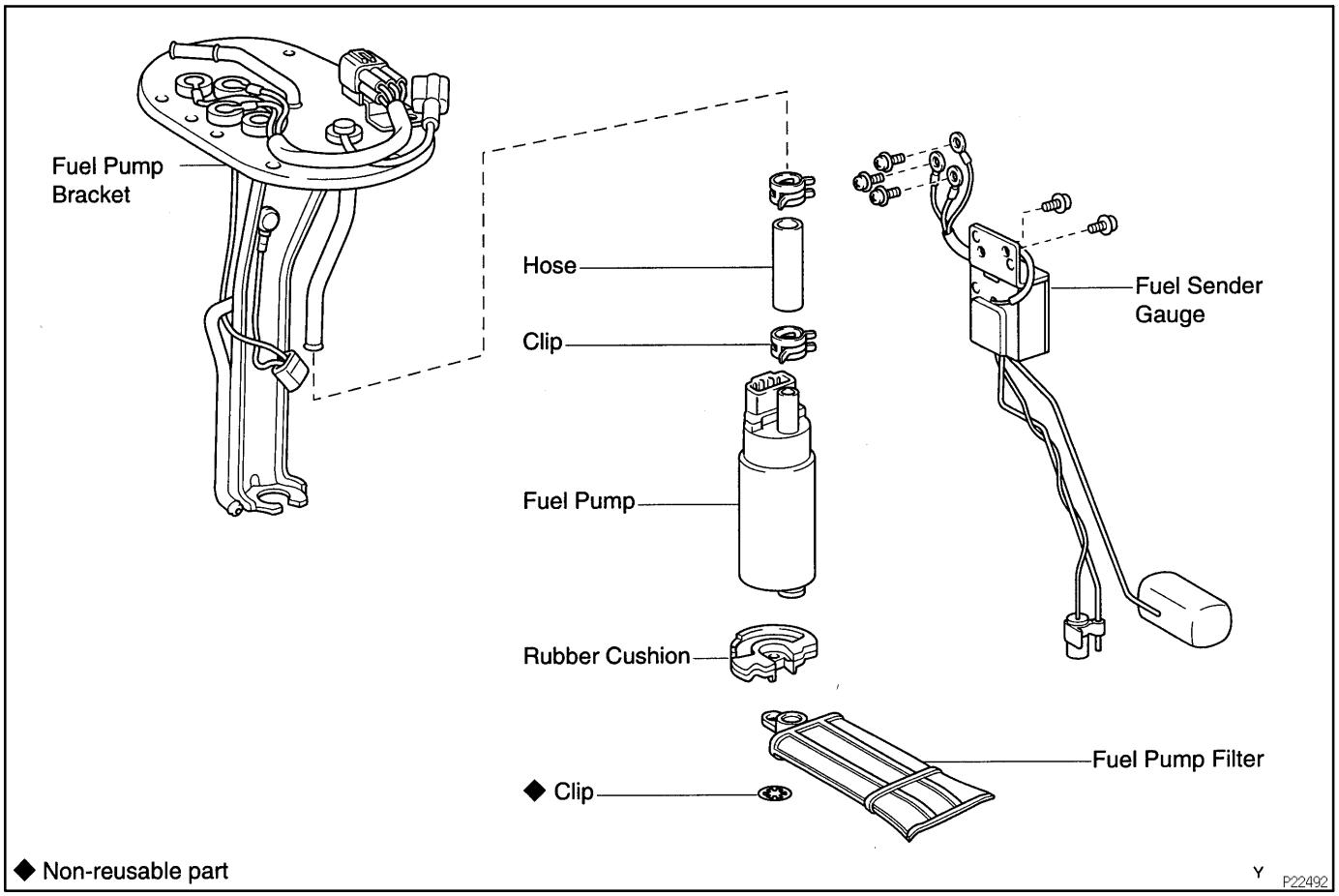
Fuel Pump Bracket
Hose
Clip
Fuel Pump
Rubber Cushion
◆ Clip
Fuel Sender Gauge
Fuel Pump Filter
◆ Non-reusable part
Y
P22492