TILT STEERING COLUMN

COMPONENTS

SR169–01

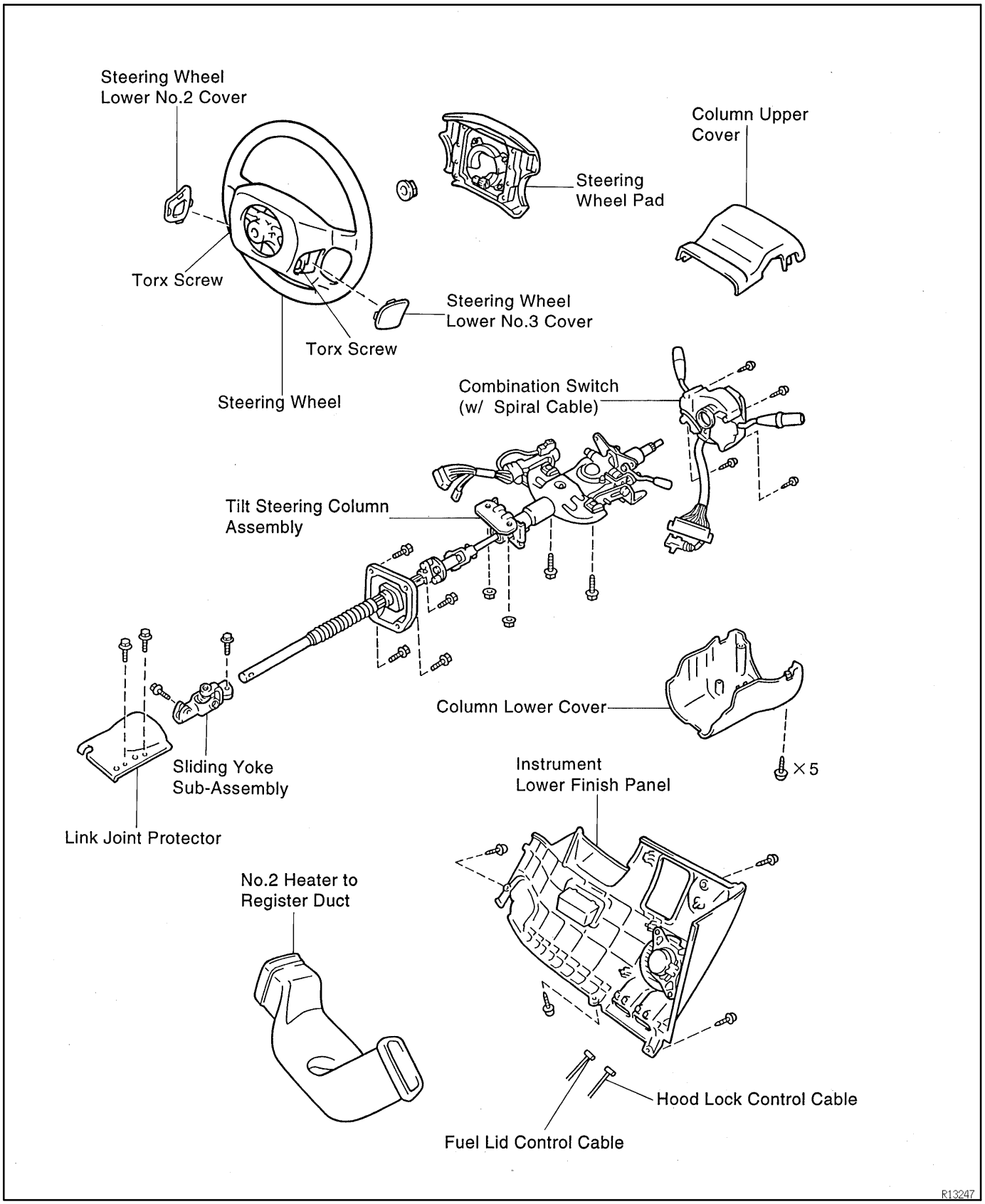

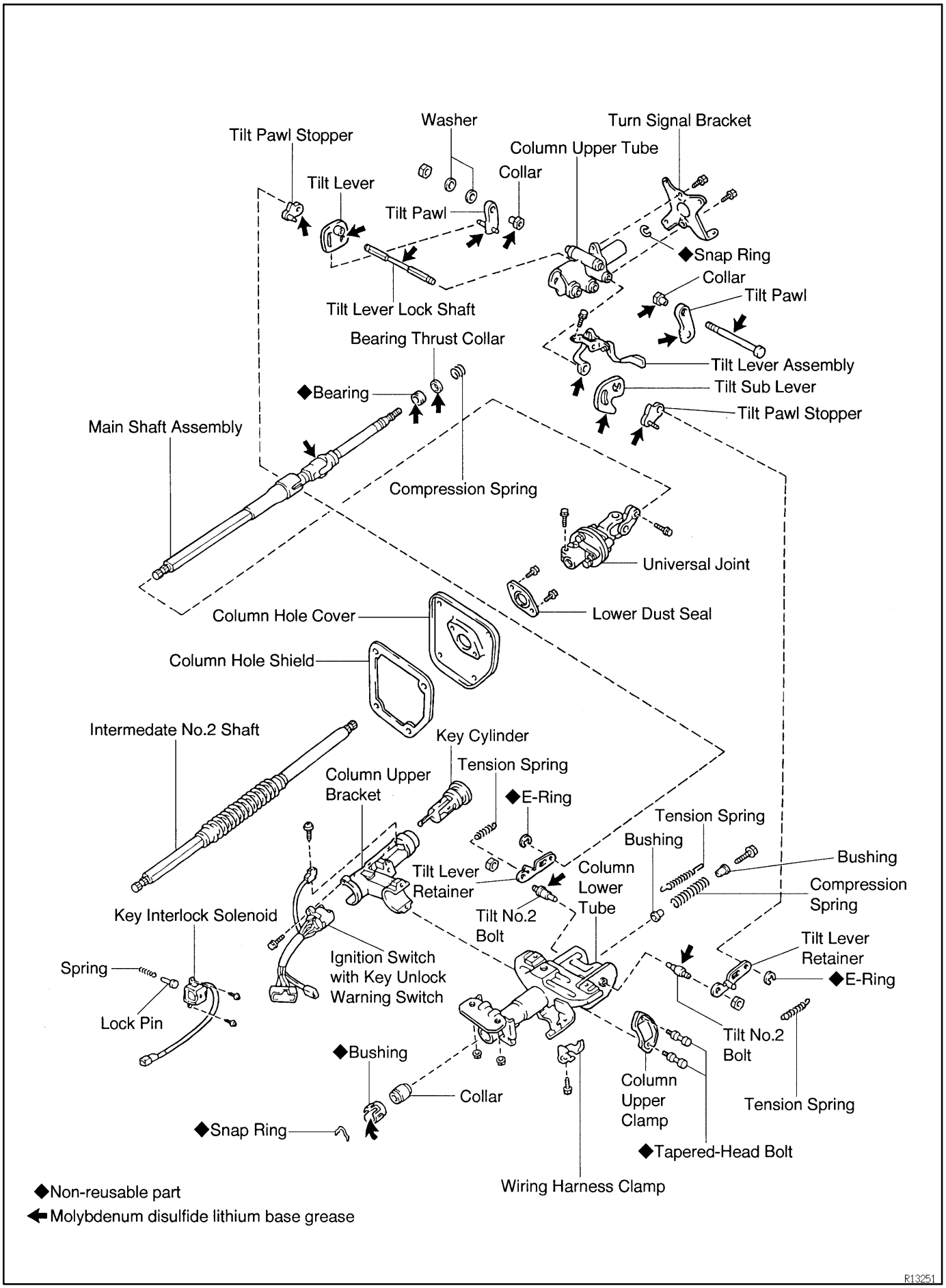
Tilt Pawl Stopper
Washer
Turn Signal Bracket
Column Upper Tube
Collar
Tilt Lever
Tilt Pawl
◆Snap Ring
Collar
Tilt Pawl
Tilt Lever Lock Shaft
Bearing Thrust Collar
Tilt Lever Assembly
Tilt Sub Lever
◆Bearing
Tilt Pawl Stopper
Main Shaft Assembly
Compression Spring
Universal Joint
Lower Dust Seal
Column Hole Cover
Column Hole Shield
Intermedate No.2 Shaft
Key Cylinder
Tension Spring
Column Upper Bracket
◆E-Ring
Tension Spring
Bushing
Bushing
Tilt Lever Retainer
Column Lower Tube
Compression Spring
Key Interlock Solenoid
Tilt No.2 Bolt
Tilt Lever Retainer
Spring
Ignition Switch with Key Unlock Warning Switch
◆E-Ring
Lock Pin
Tilt No.2 Bolt
◆Bushing
Collar
Column Upper Clamp
Tension Spring
◆Snap Ring
◆Tapered-Head Bolt
Wiring Harness Clamp
◆Non-reusable part
Molybdenum disulfide lithium base grease
R13251