TOYOTA

1PZ, 1HZ, 1HD-T ENGINE

REPAIR MANUAL

Feb., 1990

Pub. No. RM172E

FOREWORD

This repair manual has been prepared to provide information covering general service repairs for the 1PZ, 1HZ and 1HD-T engines equipped on the TOYOTA LAND CRUISER and COASTER.

Applicable models:
PZJ70, 73, 75 series
HZJ70, 73, 75, 80 series
HDJ80 series
HZB30 series
HDB30 series

Please note that the publications below have also been prepared as relevant service manuals for the components and system in this engine.

Manual Name	Pub. No.
• Land Cruiser (Wagon) New Car Features	NCF064E

All information in this manual is based on the latest product information at the time of publication. However, specifications and procedures are subject to change without notice.

TOYOTA MOTOR CORPORATION

CAUTION

This manual does not include all the necessary items about repair and service. this manual is made for the purpose of the use for the persons who have special techniques and certifications. In the cases that non–specialized or uncertified technicians perform repair or service only using this manual or without proper equipment or tool, that may cause severe injury to you or other people around and also cause damage to your customer's vehicle.

In order to prevent dangerous operation and damages to your customer's vehicle, be sure to follow the instruction shown below.

- Must read this manual thoroughly. It is especially important to have good understanding all the contents written in the PRECAUTION of "IN" section.
- The service method written in this manual is very effective to perform repair and service. When performing the operations following the procedures using this manual, be sure to use tools specified and recommended. If using non–specified or recommended tools and service method, be sure to confirm safety of the technicians and any possibility of causing personal injury or damage to the customer's vehicle before starting the operation.
- If part replacement is necessary, must replace the part with the same part number or equivalent part. Do not replace it with inferior quality.
- It is important to note that this manual contains various "Cautions" and "Notices" that must be carefully observed in order to reduce the risk of personal injury during service or repair, or the possibility that improper service or repair may damage the vehicle or render it unsafe. It is also important to understand that these "Cautions" and "Notices" are not exhaustive, because it is important to warn of all the possible hazardous consequences that might result from failure to follow these instructions.

TOYOTA
1PZ, 1HZ, 1HD-T ENGINE
REPAIR MANUAL

INTRODUCTION IN
ENGINE MECHANICAL EM
TURBOCHARGER SYSTEM TC
FUEL SYSTEM FU
COOLING SYSTEM CO
LUBRICATION SYSTEM LU
STARTING SYSTEM ST
CHARGING SYSTEM CH
SERVICE SPECIFICATIONS A
STANDARD BOLT TORQUE SPECIFICATIONS B
SST AND SSM C

©2004 TOYOTA MOTOR CORPORATION
All rights reserved. This book may not be reproduced or copied, in whole or in part, without the written permission of Toyota Motor Corporation.

First Printing: Feb. 8, 1990 01-900208-00
40th Printing: Jan. 13, 2004 40-040113-06-2

INTRODUCTION

	Page
HOW TO USE THIS MANUAL	IN-2
IDENTIFICATION INFORMATION	IN-4
GENERAL REPAIR INSTRUCTIONS	IN-4
ABBREVIATIONS USED IN THIS MANUAL	IN-7

HOW TO USE THIS MANUAL

To assist you in finding your way through this manual, the Section Title and major heading are given at the top of every page.

An **INDEX** is provided on the 1st page of each section to guide you to the item to be repaired.

At the beginning of each section, **PRECAUTIONS** are given that pertain to *all* repair operations contained in that section.

Read these precautions before starting any repair task.

TROUBLESHOOTING tables are included for each system to help you diagnose the problem and find the cause. The repair for each possible cause is referenced in the remedy column to quickly lead you to the solution.

REPAIR PROCEDURES

Most repair operations begin with an overview illustration. It identifies the components and shows how the parts fit together.

Example:

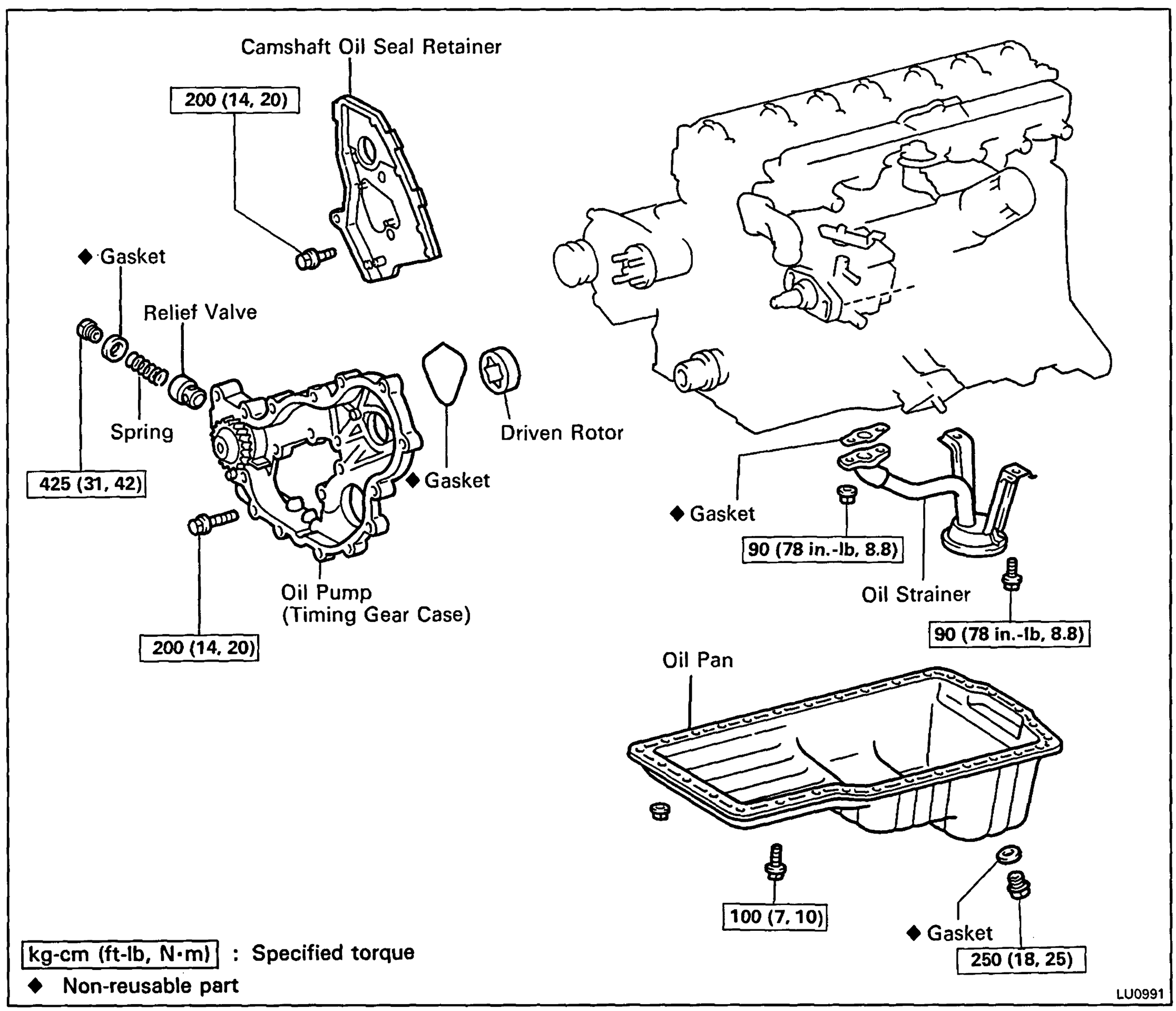

The procedures are presented in a step-by-step format:

- The illustration shows *what* to do and *where* to do it.
- The task heading tells *what* to do.
- The detailed text tells *how* to perform the task and gives other information such as specifications and warnings.

Example:

Task heading: what to do

Detailed text: how to do task

13. INSTALL GOVERNOR LINK

(a) Using SST, install the governor link with new two gaskets and the two support bolts.

Torque: 140 kg-cm (10 ft-lb, 14 N·m)

SST 09260-54012 (09269-54040)

Specification

Set part No. *Component part No.*

Illustration: what to do and where

This format provides the experienced technician with a FAST TRACK to the information needed. The upper case task heading can be read at a glance when necessary, and the text below it provides detailed information. Important specifications and warnings always stand out in bold type.

REFERENCES

References have been kept to a minimum. However, when they are required, you are given the page to refer to.

SPECIFICATIONS

Specifications are presented in bold type throughout the text where needed. You never have to leave the procedure to look up your specifications. They are also found in Appendix A for quick reference.

CAUTIONS, NOTICES, HINTS:

- CAUTIONS are presented in bold type, and indicate there is a possibility of injury to you or other people.
- NOTICES are also presented in bold type, and indicate the possibility of damage to the components being repaired.
- HINTS are separated from the text but do not appear in bold. They provide additional information to help you efficiently perform the repair.

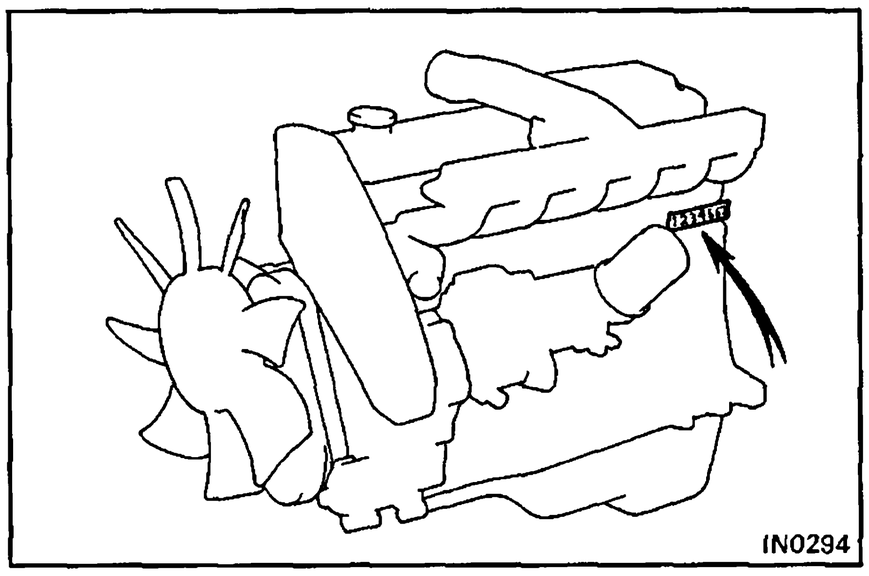

IDENTIFICATION INFORMATION

ENGINE SERIAL NUMBER

The engine serial number is stamped on the left side of the cylinder block.

GENERAL REPAIR INSTRUCTIONS

1. Use fender, seat and floor covers to keep the vehicle clean and prevent damage.
2. During disassembly, keep parts in order to facilitate reassembly.
3. Observe the following:
   (a) Before performing electrical work, disconnect the negative (–) cable from the battery terminal.
   (b) If it is necessary to disconnect the battery for inspection or repair, always disconnect the cable from the negative (–) terminal which is grounded to the vehicle body.
   (c) To prevent damage to the battery terminal post, loosen the terminal nut and raise the cable straight up without twisting or prying it.
   (d) Clean the battery terminal posts and cable terminals with a shop rag. Do not scrape them with a file or other abrasive object.
   (e) Install the cable terminal to the battery post with the nut loose, and tighten the nut after installation. Do not use a hammer to tap the terminal onto the post.
   (f) Be sure the cover for the positive (+) terminal is properly in place.
4. Check hose and wiring connectors to make sure that they are secure and correct.
5. Non-reusable parts
   (a) Always replace cotter pins gaskets, O-rings, oil seals, etc. with new ones.
   (b) Non-reusable parts are indicated in the component illustrations by the "◆" symbol.

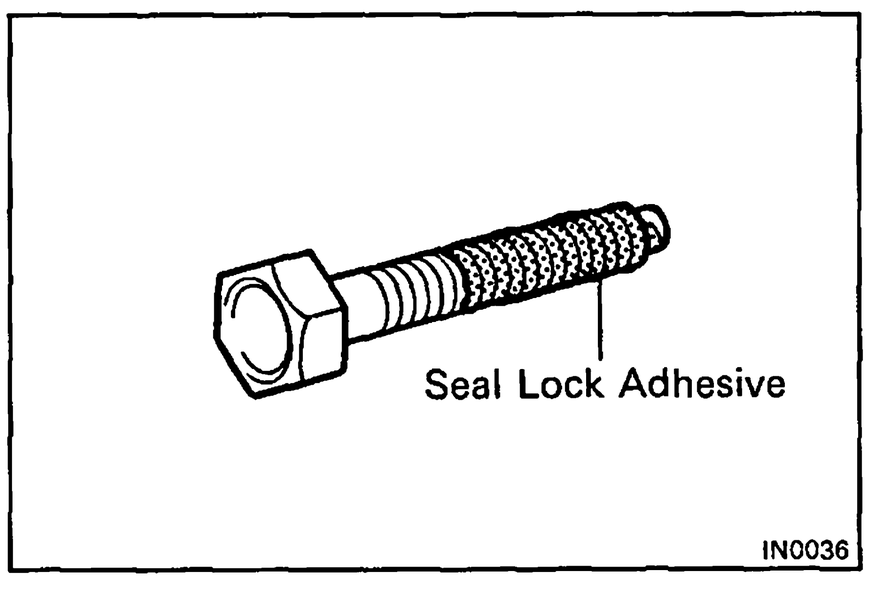

6. Precoated Parts

   Precoated parts are bolts and nuts, etc. that are coated with a seal lock adhesive at the factory.

   (a) If a precoated part is retightened, loosened or caused to move in any way, it must be recoated with the specified adhesive.

(b) Recoating of Precoated Parts

(1) Clean off the old adhesive from the part's threads.

(2) Dry with compressed air.

(3) Apply the specified seal lock adhesive to the part's threads.

(c) Precoated parts are indicated in the component illustrations by the "★" symbol.

7. When necessary, use a sealer on gaskets to prevent leaks.

8. Carefully observe all specifications for bolt torques. Always use a torque wrench.

9. Use of special service tools (SST) and special service materials (SSM) may be required, depending on the nature of the repair. Be sure to use SST and SSM where specified and follow the proper work procedure. A list of SST and SSM can be found at the back of this manual.

10. When replacing fuses, be sure the new fuse is the correct amperage. DO NOT exceed the rating or use one of a lower rating.

11. Care must be taken when jacking up and supporting the vehicle. Be sure to lift and support the vehicle at the proper locations.

(a) If the vehicle is to be jacked up only at the front or rear end, be sure to block the wheels in order to ensure safety.

(b) After the vehicle is jacked up, be sure to support it on stands. It is extremely dangerous to do any work on the vehicle raised on a jack alone, even for a small job that can be finished quickly.

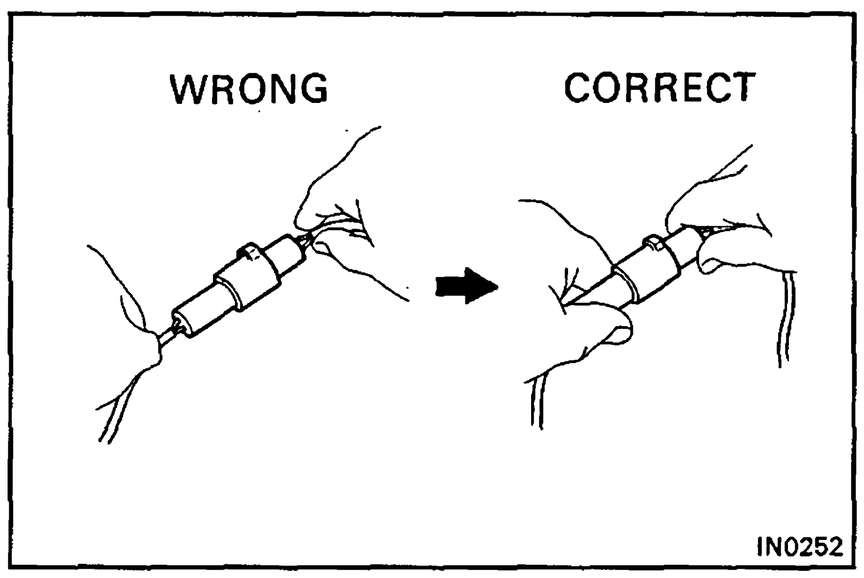

12. Observe the following precautions to avoid damaging the parts:

(a) Be careful not to drop electrical components, such as sensors or relays. If they are dropped on a hard floor, they should be replaced and not reused.

(b) To pull apart electrical connectors, pull on the connector itself, not the wires.

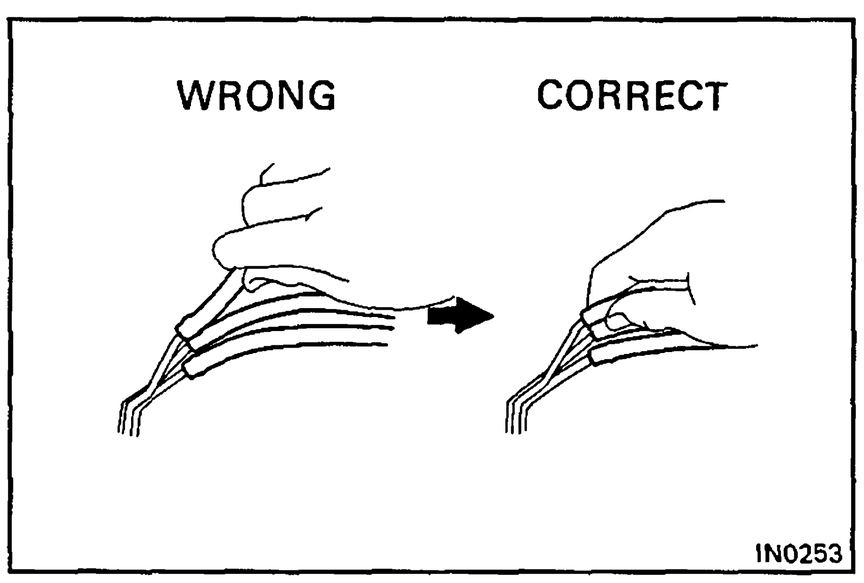

(c) To disconnect vacuum hoses, pull on the end, not the middle of the hose.

(d) When steam cleaning an engine, protect the air filter, and injection pump from water.

(e) Never use an impact wrench to remove or install temp. switches or temp. sensors.

(f) When checking continuity at the wire connector, insert the tester probe carefully to prevent terminals from bending.

(g) When using a vacuum gauge, never force the hose onto a connector that is too large. Use a step-down adapter instead. Once the hose has been stretched, it may leak.

13. After removing and reinstalling the injection pump and fuel hoses, clean off the fuel on engine components. In particular, be sure to check the radiator hose and by-pass hose, because they deteriorate easily if they come into contact with fuel.

ABBREVIATIONS USED IN THIS MANUAL

A/C	Air Conditioner
ACV	Air Control Valve
ACSD	Automatic Cold Start Device
Approx.	Approximately
A/T	Automatic Transmission
BACS	Boost and Altitude Compensation Stopper
BDC	Bottom Dead Center
Ex.	Except
FL	Fusible Link
FIPG	Formed in Place Gasket
HAC	High Altitude Compensator
LH	Left-Hand
LHD	Left-Hand Drive
LST	Load Sensing Timer
MP	Multipurpose
M/T	Manual Transmission
OHC	Over Head Cam
O/S	Oversized
PCS	Power Control System
PCV	Positive Crankcase Ventilation
RH	Right-Hand
RHD	Right-Hand Drive
SSM	Special Service Materials
SST	Special Service Tools
STD	Standard
SW	Switch
TDC	Top Dead Center
U/S	Undersize
w/	With
w/o	Without

ENGINE MECHANICAL

	Page
DESCRIPTION	EM-2
TROUBLESHOOTING	EM-4
Diesel Engine Diagnosis	EM-4
Diesel Electrical System Diagnosis	EM-14
ENGINE TUNE-UP	EM-17
COMPRESSION CHECK	EM-30
TIMING BELT	EM-32
TIMING GEARS	EM-42
CYLINDER HEAD	EM-54
CYLINDER BLOCK	EM-84

DESCRIPTION

The 1PZ engine is an in-line 5-cylinder 3.5 liter OHC engine.
The 1HZ and 1HD-T engines are an in-line 6-cylinder 4.2 liter OHC engine.

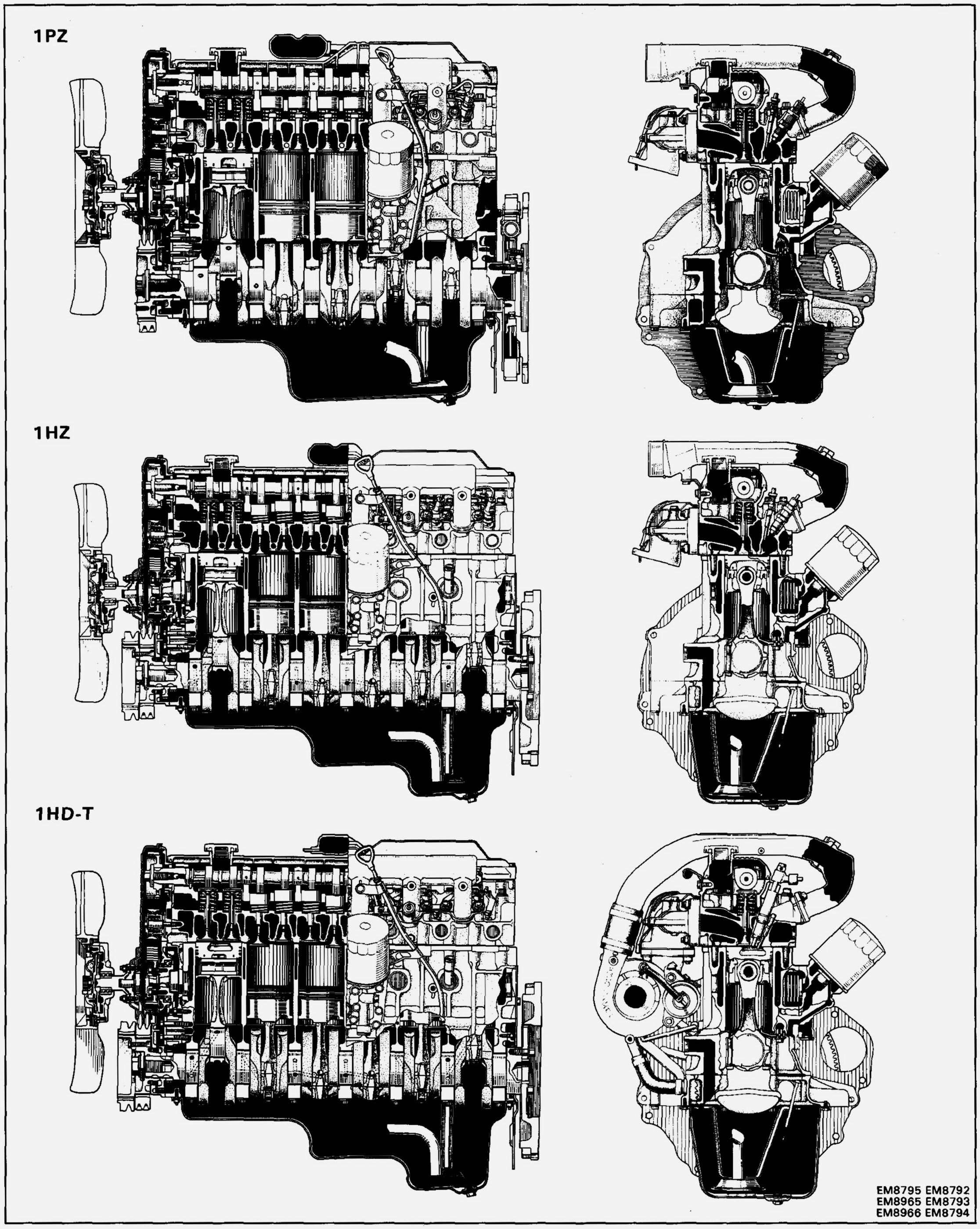

The 1PZ engine is an in-line 5-cylinder engine with the cylinders numbered 1 – 2 – 3 – 4 – 5 from the front. This engine's injection order is 1 – 2 – 4 – 5 – 3.

The 1HZ and 1HD-T engines are an in-line 6-cylinder engine with the cylinders numbered 1 – 2 – 3 – 4 – 5 – 6 from the front. This engine's injection order is 1 – 4 – 2 – 6 – 3 – 5.

The crankshaft is supported by 6 (1PZ) or 7 (1HZ and 1HD-T) bearings on the inside of the crankcase. These bearings are made of aluminum alloy. The crankshaft is integrated with 10 weights (1PZ) or 12 weights (1HZ and 1HD-T) which are cast along with it for balancing. Oil holes are built into the crankshaft for supplying oil to the connecting rods, bearings and other components.

The crankshaft bearing cap is of ladder frame construction and is incorporated into the crank case.

The cylinder head is made of cast iron with a cross flow type intake and exhaust layout. The combustion chambers are swirl chamber type for the 1PZ and 1HZ engines and direct injection type for the 1HD-T engine. The camshaft journal part of the cylinder head has camshaft caps made of aluminum alloy and is made of cast iron on the cylinder head side. The camshaft journal has no bearings (with the exception of the No.1 journal).

The 1HZ and 1HD-T engines has dual-type exhaust manifolds.

Exhaust and intake valves are equipped with irregular pitch springs which are capable of following the valves even at high engine speeds.

The camshaft is driven by the timing belt. The camshaft journal is supported at 6 places (1PZ) or 7 places (1HZ and 1HD-T). Lubrication of the camshaft journal and cam is accomplished by oil being supplied through the oiler port in the No.6 (1PZ) or No.7 (1HZ and 1HD-T) of the camshaft journal.

Adjustment of the valve clearance is done by means of an outer shim type system, in which valve adjusting shims are located above the valve lifters. This permits replacement of the shims without removal of the camshaft.

Pistons are made of highly temperature-resistant aluminum alloy. As the 1HD-T engine is the direct injection type, a deep combustion chamber has been provided. The No.1 piston ring groove has been strengthened using a fiber reinforced metal.

Piston pins are the full-floating type, with the pins fastened to neither the connecting rods nor the piston boss, but with a snap rings fitted to both ends of the pin to prevent the pin from slipping out.

The No.1 compression ring is made of steel and the No.2 compression ring is made of cast iron. The oil ring is made of steel. The outer diameter of each piston ring is slightly larger than the diameter of the piston and the flexibility of the rings allows them to hug the cylinder walls when they are mounted on the piston. Compression rings No.1 and No.2 work to prevent the leakage of gas from the cylinder and the oil ring works to scrape oil off the cylinder walls to prevent it from entering the combustion chamber.

The cylinder block is made of cast iron. It has 5 cylinders (1PZ) or 6 cylinders (1HZ and 1HD-T) which are approximately 1.7 times the length of the piston stroke. The top of the cylinders is closed off by the cylinder head and the lower end of the cylinders becomes the crankcase, in which the crankshaft is installed. In addition, the cylinder block contains a water jacket, through which coolant is pumped to cool the cylinders.

Plastic region tightening bolts are used for the cylinder head bolts, crankshaft bearing cap bolts and connecting rod cap bolts.

The oil pan is bolted onto the bottom of the crankshaft bearing cap with bolts and nuts. The oil pan is an oil reservoir made of pressed steel sheet.

TROUBLESHOOTING

Diesel Engine Diagnosis

GENERAL

1. Diesel engine problems are usually caused by the engine or fuel system. The injection pump is very rarely the cause of fuel system problems.
2. Before beginning fuel system tests, first check that the engine compression, valve timing and other major systems are within specifications.

PRELIMINARY CHECKS

1. Before performing fuel system checks, ensure that the engine is in good running condition. If necessary, first check the compression, timing and major components or systems.
2. Check the air filter, and clean or replace it if necessary.
3. Check that there is sufficient fuel in the tank.
4. Check if the fuel is contaminated with gasoline or other foreign elements. Only good-quality diesel fuel should be used.
5. Bleed air from the system by pumping the priming.
6. Check for water in the fuel filter and fuel tank, and drain as necessary.
7. If the engine will not crank or if it cranks slowly, first troubleshoot the electrical system.

PRECAUTION:

1. **The basic troubleshooting procedures for the diesel engine (valve clearance, compression, bearings, valves, pistons, etc.) are the same checks you would make for gasoline engine.**
2. **Repair of the injection pump requires considerable skill and use of a special test bench.**

ENGINE WILL NOT CRANK

(Possible Cause)	(Check Procedure and Correction Method)
1. LOOSE OR CORRODED BATTERY CABLES	Check cables from battery to starter and make necessary repairs.
2. DISCHARGED BATTERY	Check alternator output and drive belt. If necessary, repair. (See page CH-5)
3. INOPERATIVE STARTER	Check for battery voltage at starter terminals 30 and 50. If Okay, see STARTING SYSTEM for repair procedure. (see page ST-15)

ENGINE CRANKS SLOWLY-WILL NOT START

HINT: Minimum cranking speed:

Cold	**HZJ80 (A/T) and HDJ80 (A/T)**	**110 rpm**
	Others	**100 rpm**
Hot		**150 rpm**

(Possible Cause)	(Check Procedure and Correction Method)
1. LOOSE OR CORRODED BATTERY CABLES	Check cables from battery to starter and make necessary repairs.
2. DISCHARGED BATTERY	Check alternator output and drive belt. If necessary, repair. (See page CH-5)
3. IMPROPER ENGINE OIL	Check engine oil. If improper viscosity, drain and refill with oil of viscosity recommended by manufacturer. (See page LU-6)

ENGINE CRANKS NORMALLY BUT WILL NOT START

(Possible Cause)	(Check Procedure and Correction Method)
1. NO FUEL TO NOZZLE	Loosen any one injection pipe union nut from its nozzle holder. Crank engine for about 5 seconds while confirming that fuel is being discharged from pipe. If fuel is coming out, begin diagnosis from item 4. If not, begin from item 2.
2. NO FUEL CUT SOLENOID OPERATION	With starter switch turned ON, check for fuel cut solenoid operation noise (clicking sound) while repeatedly connecting and disconnecting fuel cut solenoid. If no noise, check if there is battery voltage to solenoid when starter switch is ON. If battery voltage is confirmed, fuel cut solenoid is faulty and should be replaced. If no voltage, refer to ELECTRICAL DIAGNOSIS and make necessary repairs.
3. NO FUEL INTO INJECTION PUMP	Disconnect inlet hoses from fuel filter, and feed clean fuel from separate container directly into fuel pump. HINT: When feeding fuel tank directly into pump, keep container at same level as vehicle fuel tank. If engine starts, either fuel filter or line between fuel tank and filter is clogged and should be repaired accordingly. If engine still does not start (no fuel intake), check fuel line between filter and pump. If normal, pump is faulty and should be replaced.
4. FUEL LEAKAGE FROM INJECTION PIPES	Check for loose unions or cracks. If leaking, tighten to standard torque or, if necessary, replace pipe(s).
5. INOPERATIVE PRE-HEATING OPERATION	With starter switch turned ON and glow plug indicator light illuminated, check that there is voltage applied to glow plug. If not, refer to ELECTRICAL DIAGNOSIS and repair as necessary.

6. FAULTY GLOW PLUG OPERATION	Check glow plug for continuity. If no continuity, a broken wire is indicated and glow plug should be replaced.
7. IMPROPER INJECTION TIMING	Check injection timing. (See page EM-27) **Plunger stroke: 1PZ 0.82–0.88 mm (0.0323–0.0346 in.)** **1HZ 1.03–1.09 mm (0.0406–0.0429 in.)** **1HD-T 1.29–1.35 mm (0.0508–0.0531 in.)** If not as above, injection pump is improperly adjusted.
8. (w/ ACSD) IMPROPER COLD START ADVANCE AND FAST IDLE	Check timer piston stroke and fast idle lever opening angle with an injection pump tester when cold start advance is operated.
9. FAULTY INJECTION NOZZLES	Check injection pressure with a nozzle tester. (See page FU-10 or 20) **Opening pressure:** **1PZ and 1HZ 135–155 kg/cm^2 (1,920–2,205 psi) (13,239–15,200 kPa)** **1HD-T** **No.1 opening pressure 180–190 kg/cm^2 (2,560–2,702 psi) (17,652 – 18,633 kPa)** **No.2 opening pressure (Inspection pressure) 132–138 kg/cm^2 (1,877–1,963 psi) (12,945–13,533 kPa)** If not as above, nozzle adjustment is improper and pressure should be readjusted. If pressure cannot be adjusted to specification, replace injection nozzle.

ROUGH IDLE WITH WARM ENGINE

(Possible Cause)	(Check Procedure and Correction Method)
1. IMPROPER ADJUSTMENT OF ACCELERATOR CABLE	With accelerator pedal released, check that adjusting lever is in contact with idle speed adjusting screw. Also check if accelerator cable or linkage is catching on something. If necessary, adjust so that lever is in contact with screw, or make other required repairs.
2. IDLE SPEED TOO LOW	Check idle speed. (See page EM-27) **Idle speed:** **1PZ 600 – 700 rpm** **1HZ M/T 600 – 700 rpm** **1HZ A/T 660 – 760 rpm** **1HD-T M/T 600 – 700 rpm** **1HD-T A/T 750 – 850 rpm** HINT: If less than standard, idling would normally be rough. If not as above, adjust with idle speed adjusting screw.
3. FUEL LEAKAGE	Check for leaks at injection pump connections, pump distributive head bolts, injection nozzles and delivery valve holders. Tighten any loose connections to specified torque or replace parts as necessary.
4. IMPROPER INJECTION TIMING	Refer to step 7 of ENGINE CRANKS NORMALLY BUT WILL NOT START, above.

5. IMPROPER OPERATION OF INJECTION NOZZLES OR DELIVERY VALVES

With engine idling, loosen injection pipe to each cylinder in order, and check if idle speed changes.

If no change, a faulty cylinder is indicated. Check according to following procedure.

- Faulty injection nozzle

Check injection nozzle with a nozzle tester. (See page FU-10 or 20)

Opening pressure:

1PZ and 1HZ **135–155 kg/cm^2 (1,920–2,205 psi) (13,239–15,200 kPa)**

1HD-T

No.1 opening pressure **180–190 kg/cm^2 (2,560–2,702 psi) (17,652 – 18,633 kPa)**

No.2 opening pressure (Inspection pressure) **132–138 kg/cm^2 (1,877–1,963 psi) (12 ,945–13,533 kPa)**

If not as above, nozzle adjustment is improper and pressure should be readjusted.

If pressure cannot be adjusted to specification, replace injection nozzle.

- Faulty delivery valve

If injection pressure is as specified, delivery vale is defective and should be replaced.

ENGINE SUDDENLY STOPS

(Possible Cause)	(Check Procedure and Correction Method)
1. ENGINE WILL NOT RE-START	Check to see if engine re-starts according to prescribed procedure. If not, refer to ENGINE CRANKS NORMALLY BUT WILL NOT START, above, and repair as necessary.
2. ROUGH IDLE	Refer to ROUGH IDLE WITH WARM ENGINE and repair accordingly.
3. MALFUNCTION OF FUEL CUT SOLENOID	Refer to ENGINE CRANKS NORMALLY BUT WILL NOT START, above, and check accordingly. HINT: No operation noise from fuel cut solenoid may be due to loose electrical connections, so check connectors before proceeding with further repairs.
4. NO FUEL INTO INJECTION PUMP	Refer to step 3 of ENGINE CRANKS NORMALLY BUT WILL NOT START, above.

LACK OF POWER

HINT:
- First check that the air cleaner is not clogged or the engine overheating.
- Not applicable if the customer desires an output power higher than specified for that vehicle. For accuracy, adjust with a chassis dynamo.

(Possible Cause)	(Check Procedure and Correction Method)
1. IMPROPER ADJUSTMENT OF ACCELERATOR CABLE	With accelerator fully depressed, check that adjusting lever is in contact with maximum speed adjusting screw. Also check if accelerator cable or linkage is catching on something. If necessary, adjust so that lever is in contact with screw, or make other required repairs.
2. INSUFFICIENT MAXIMUM SPEED	Check maximum speed. (See page EM-27) **Maximum speed:** **1PZ and 1HZ 4,500 – 4,700 rpm** **1HD-T 4,300 – 4,500 rpm** If not as above, adjust with maximum speed adjusting screw.

3. INTERCHANGED OVERFLOW SCREW (OUT) AND INLET (NO MARK) FITTING	HINT: Overflow screw is marked "OUT" and has an inner jet. Although both fittings are same size, they must not be interchanged.
4. FUEL LEAKAGE	Refer to step 3 of ROUGH IDLE WITH WARM ENGINE.
5. CLOGGED FUEL FILTER	Disconnect inlet hose to fuel filter, and feed clean fuel directly into pump. HINT: When feeding fuel directly into pump, keep container at same level as vehicle fuel tank. If engine condition improves, fuel filter is clogged and should be replaced. (See page FU-4) If no increase in engine condition after replacing fuel filter, check priming pump (hand pump) or perform other necessary repairs.
6. IMPROPER INJECTION TIMING	Refer to step 7 of ENGINE CRANKS NORMALLY BUT WILL NOT START.
7. FAULTY INJECTION NOZZLES	Refer to step 9 of ENGINE CRANKS NORMALLY BUT WILL NOT START.

EXCESSIVE EXHAUST SMOKE

HINT:
- Check that the air cleaner is not clogged.
- Check with the customer whether or not oil consumption has been excessive.

(Possible Cause)	(Check Procedure and Correction Method)
1. IMPROPER INJECTION TIMING	Refer to step 7 of ENGINE CRANKS NORMALLY BUT WILL NOT START. HINT: Black smoke indicates advanced timing while white smoke indicates retarded timing. Adjustments should be made accordingly.
2. CLOGGED FUEL FILTER	Refer to step 5 of LACK OF POWER. HINT: At high speed (2,000 – 3,000 rpm), a clogged filter tends to make exhaust smoke white.
3. FAULTY INJECTION NOZZLES	Refer to step 9 of ENGINE CRANKS NORMALLY BUT WILL NOT START. HINT: Excessive exhaust smoke is often caused by nozzle pressure being too low.

EXCESSIVE FUEL CONSUMPTION

HINT: Check whether clutch slipping, brakes grabbing, tires wrong size or air filter clogged.

(Possible Cause)	(Check Procedure and Correction Method)
1. FUEL LEAKAGE	Refer to step 3 of ROUGH IDLE WITH WARM ENGINE.
2. IDLE SPEED TOO HIGH	After sufficiently warming up engine, check idle speed. (See page EM-27) **Idle speed:** **1PZ 600 – 700 rpm** **1HZ M/T 600 – 700 rpm** **1HZ A/T 660 – 760 rpm** **1HD-T M/T 600 – 700 rpm** **1HD-T A/T 750 – 850 rpm** If not as above, adjust with idle speed adjusting screw.
3. MAXIMUM SPEED TOO HIGH	Check maximum speed. (See page EM-27) **Maximum speed:** **1PZ and 1HZ 4,500 – 4,700 rpm** **1HD-T 4,300 – 4,500 rpm** If not as above, adjust with maximum speed adjusting screw.
4. IMPROPER INJECTION TIMING	Refer to step 7 of ENGINE CRANKS NORMALLY BUT WILL NOT START.
5. FAULTY INJECTION NOZZLES	Refer to step 9 of ENGINE CRANKS NORMALLY BUT WILL NOT START.

ENGINE NOISE WHEN WARM
(Cranking Noise with Excessive Vibration)

(Possible Cause)	(Check Procedure and Correction Method)
1. ENGINE COOLANT TEMPERATURE TOO LOW	Check coolant temperature with coolant temperature gauge. If not sufficiently warm, thermostat is faulty and should be replaced.
2. IMPROPER INJECTION TIMING	Refer to step 7 of ENGINE CRANKS NORMALLY BUT WILL NOT START.
3. FAULTY INJECTION NOZZLES	Refer to step 9 of ENGINE CRANKS NORMALLY BUT WILL NOT START.

ENGINE WILL NOT RETURN TO IDLE

(Possible Cause)	(Check Procedure and Correction Method)
BINDING ACCELERATOR CABLE	Operate adjusting lever on top of injection pump, and check if engine returns to idle. (See page EM-27) If so, accelerator cable is binding or improperly adjusted and should be repaired accordingly. If engine does not return to idle, injection pump is faulty and should be replaced.

ENGINE WILL NOT SHUT OFF WITH KEY

(Possible Cause)	(Check Procedure and Correction Method)
IMPROPER FUEL CUT SOLENOID OPERATION	Disconnect connector of fuel cut solenoid, and check if engine stops. If so, starter switch is faulty and should be repaired as necessary or replaced. If engine does not stop, either fuel cut solenoid is faulty or there is interference by foreign particles. Repair as necessary.

Diesel Electrical System Diagnosis

ENGINE DOES NOT START COLD

HINT:
- Battery voltage at least 12 V (or 24 V) – starter switch OFF.
- Engine cranks normally.
- Fusible link okay.
- Check the voltage marked with an asterisk (*) just as the starter switch is placed at ON because the voltage will change.

1. Pre-Heating System (Super Glow Type)

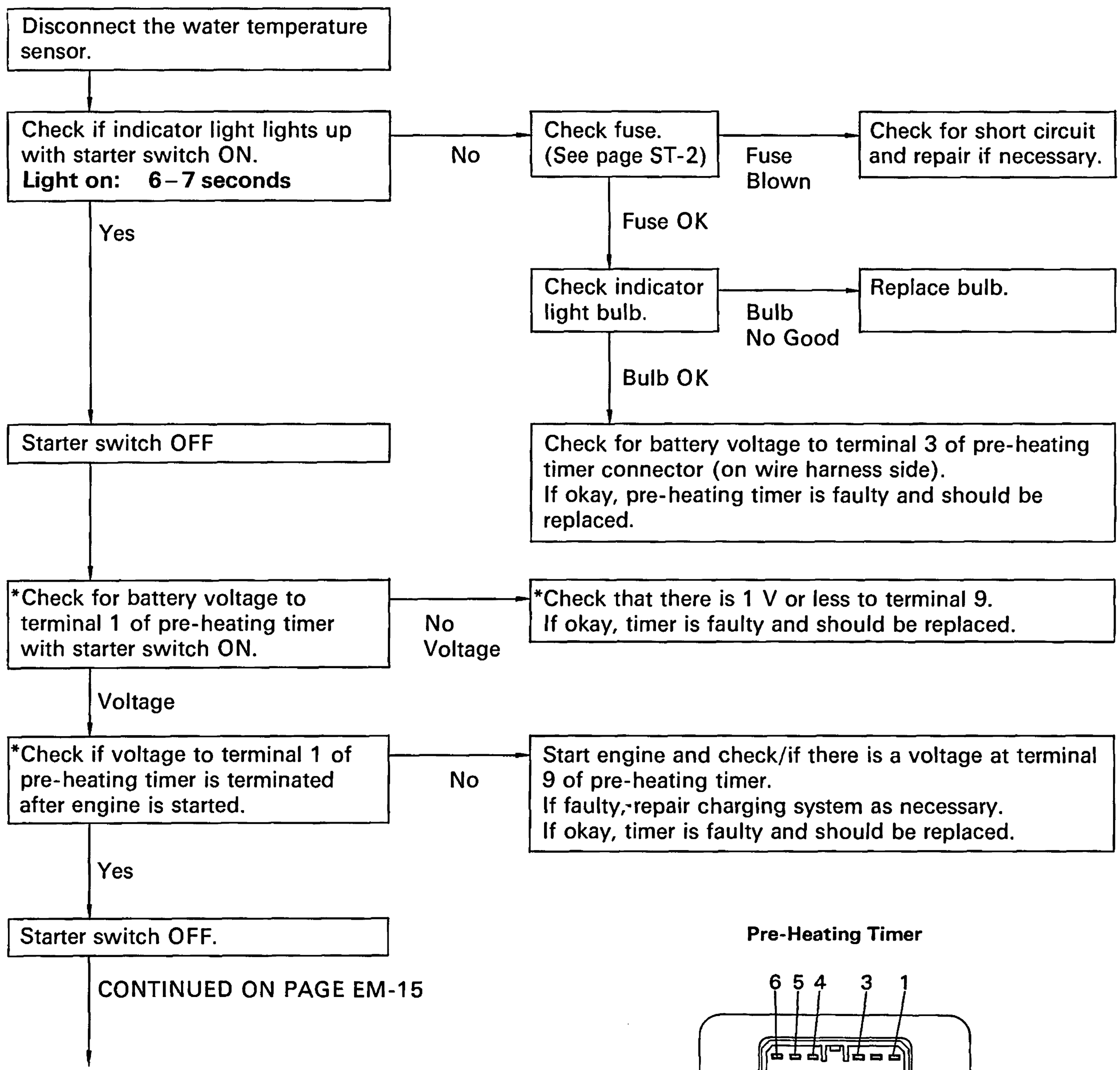

CONTINUED FROM PAGE EM-14

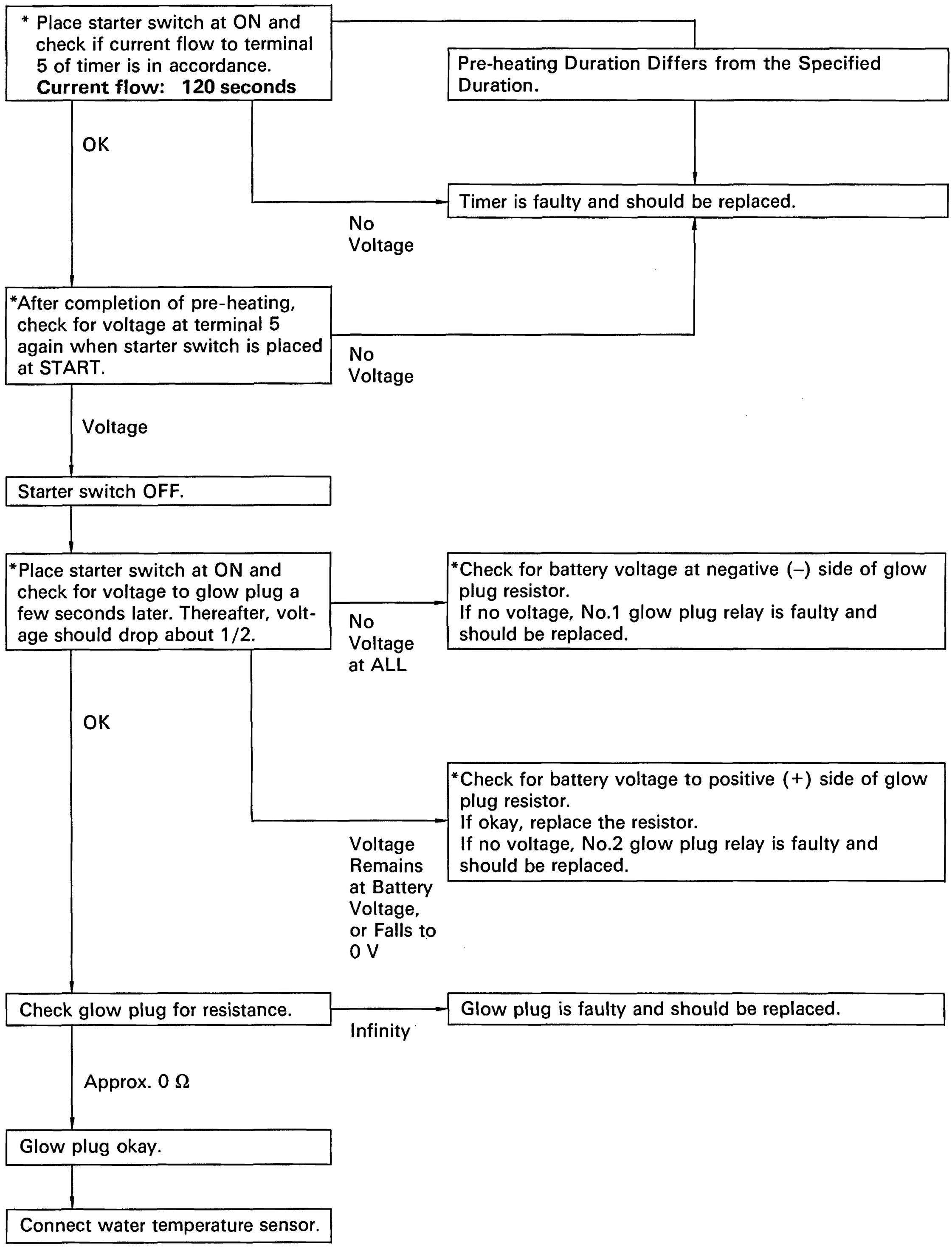

2. Fuel Cut Solenoid Valve

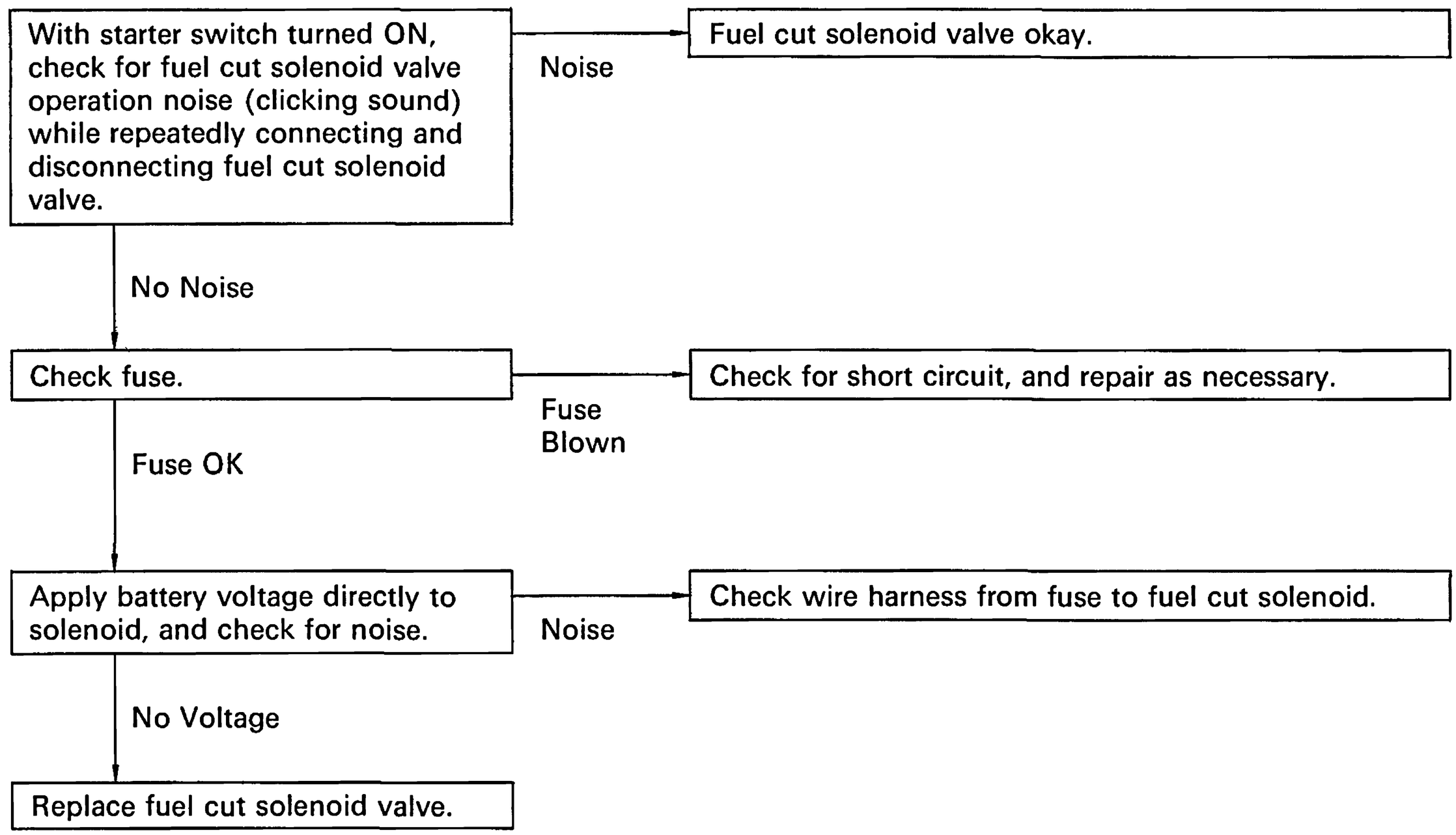

ENGINE TUNE-UP

INSPECTION OF ENGINE COOLANT

(See steps 1 and 2 on page CO-4)

INSPECTION OF ENGINE OIL

(See steps 1 and 2 on page LU-5)

INSPECTION OF BATTERY

(See pages 1 and 2 on page CH-5)

Standard specific gravity:
95D31R and 95D31L
1.27 – 1.29 when fully charged at 20°C (68°F)
ex. (95D31R and 95D31L)
1.25 – 1.27 when fully charged at 20°C (68°F)

INSPECTION OF AIR FILTER

(Paper Filter Type)

1. **INSPECT AIR FILTER**

   Visually check that the filter element is not excessively dirty, damaged or oily.

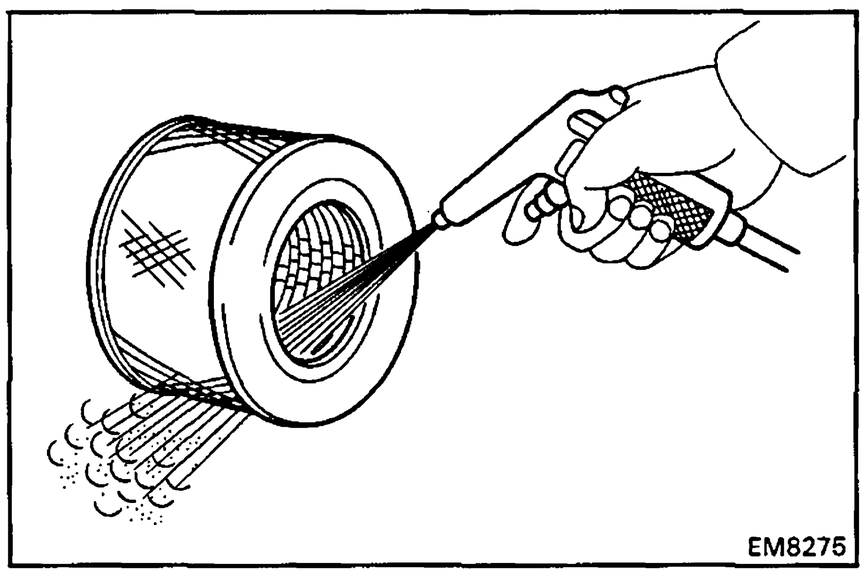

2. **CLEAN AIR FILTER**

   Clean the filter element with compressed air.

   First blow from the inside thoroughly. Then blow off the outside of the filter element.

(Washable Type)

1. **INSPECT AIR FILTER**

   Visually check that the filter element is not excessively dirty, damaged or oily.

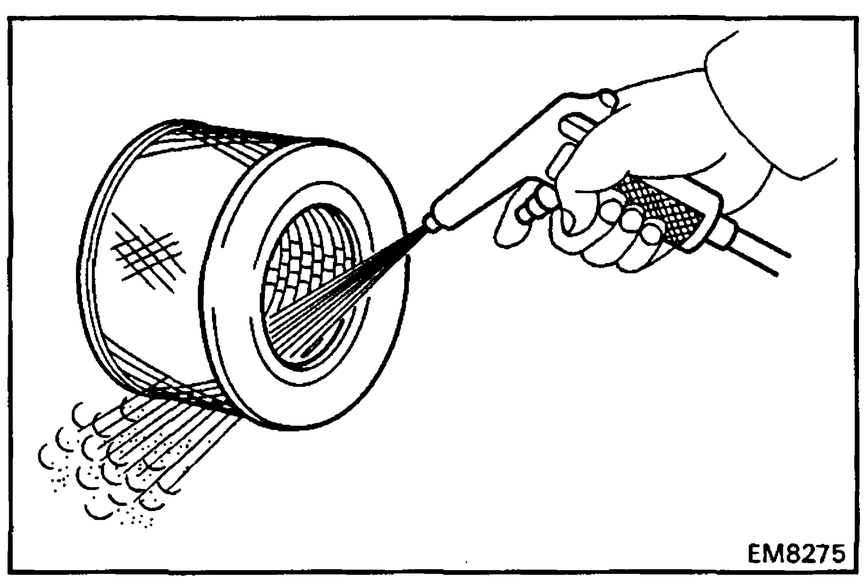

2. **CLEAN AIR FILTER**

   (a) Blow dirt off in the filter element with compressed air.

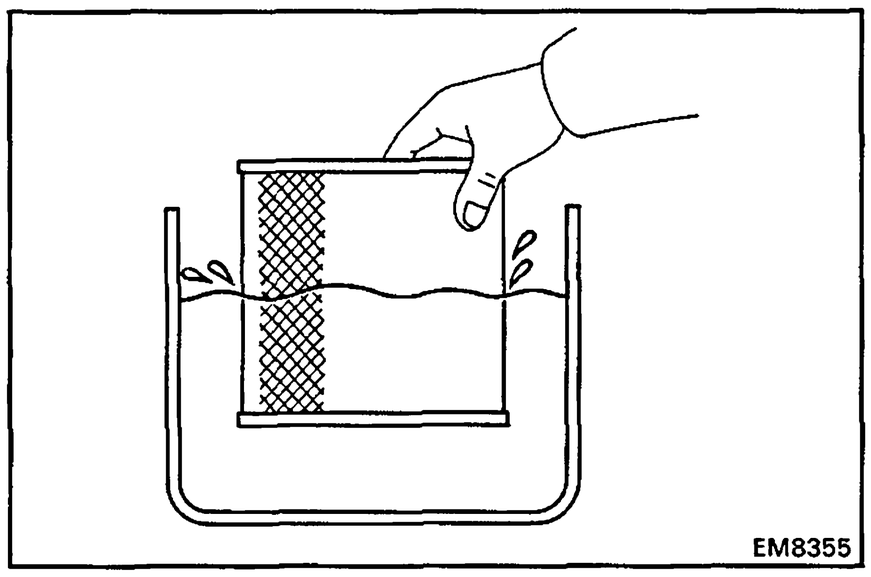

(b) Submerge the filter element in the water and agitate it up and down more than ten times.

(c) Repeat rinsing in clean water unitil rinse water is clear.

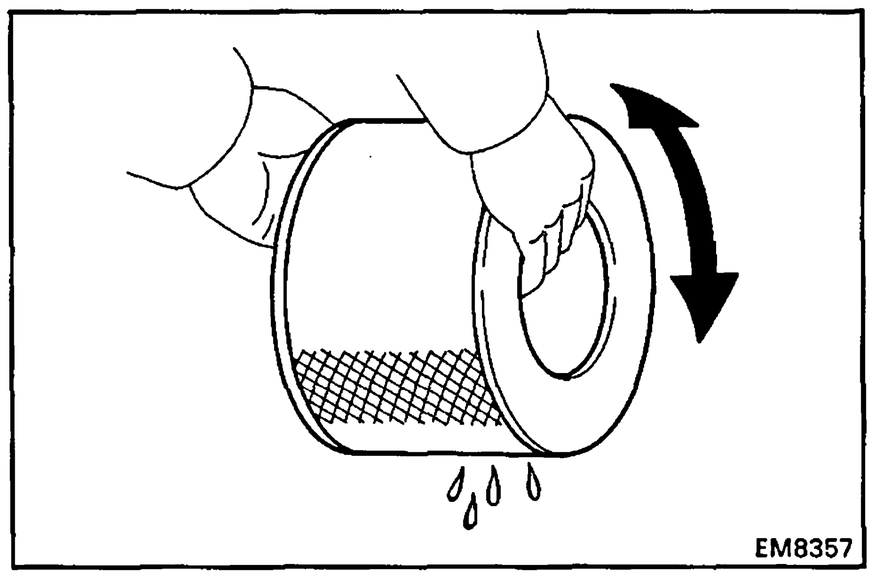

(d) Remove excess water by shaking the filter element or blowing with compressed air.

NOTICE: Do not beat or drop filter element.

(e) Wipe off dust on the air cleaner case interior.

INSPECTION OF ALTERNATOR DRIVE BELT

(See step 3 on page CH-5)

Drive belt deflection:

New belt	6 – 7 mm (0.24 – 0.28 in.)
Used belt	8 – 11 mm (0.31 – 0.43 in.)

Drive belt tension (Reference):

New belt	45 – 55 kg
Used belt	20 – 35 kg

INSPECTION OF GLOW PLUGS

(See page ST-7)

ADJUSTMENT OF VALVE CLEARANCE

HINT: Adjust the valve clearance while the engine is cold.

1. **REMOVE INTAKE PIPE**
   (See step 6 on page EM-34)

2. **REMOVE CYLINDER HEAD COVER**
   (See step 7 on page EM-35)

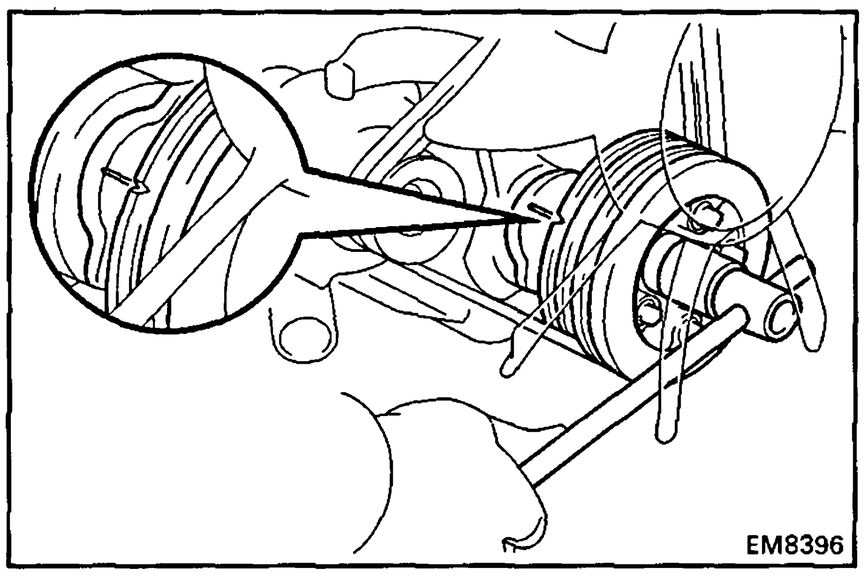

3. **SET NO.1 CYLINDER TO TDC/COMPRESSION**
   (a) Turn the crankshaft pulley clockwise, and align its groove with the timing gear cover groove.
   (b) (1PZ)
   Check that the valve lifters on the No.1 cylinder are loose and exhaust valve lifter on the No.5 cylinder is tight.
   (c) (1HZ and 1HD-T)
   Check that the valve lifters on the No.1 cylinder are loose and valve lifters on the No.6 cylinder are tight.

   If not, turn the crankshaft one revolution (360°) and align the mark as above.

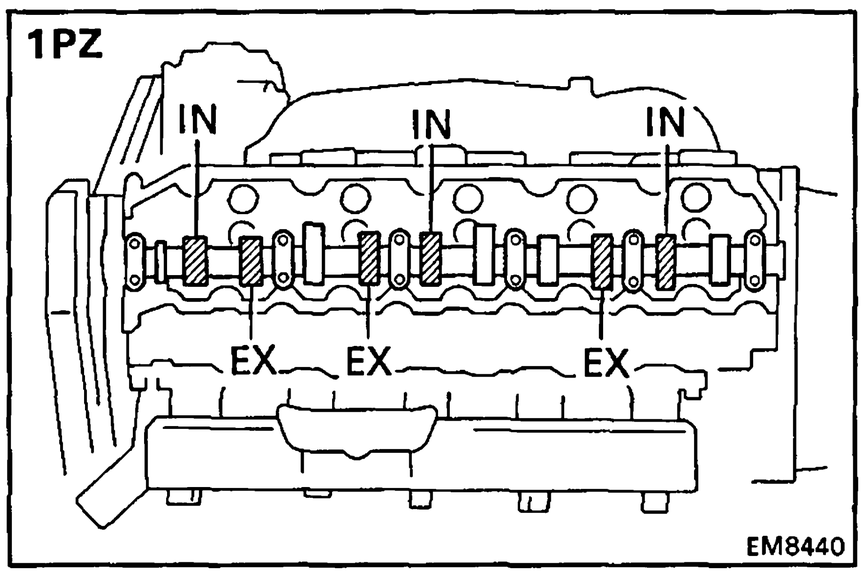

4. **ADJUST VALVE CLEARANCE**
   (a) Check only those valves indicated in the illustration.
   - Using a thickness gauge, measure the clearance between the valve lifter and camshaft.
   - Record the valve clearance measurements which are out of specification. They will be used later to determine the required replacement adjusting shim.

   Valve clearance (Cold):
   Intake 0.15 – 0.25 mm (0.006 – 0.010 in.)
   Exhaust 0.35 – 0.45 mm (0.014 – 0.018 in.)

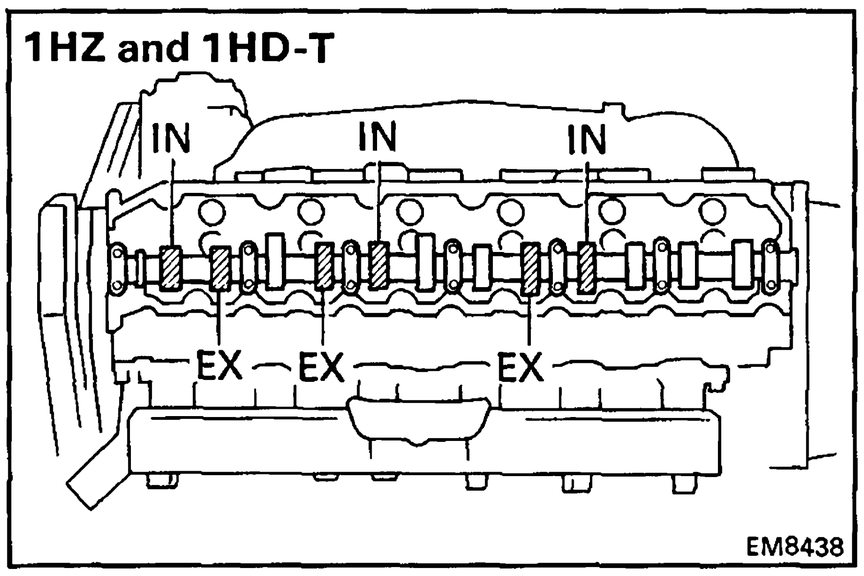

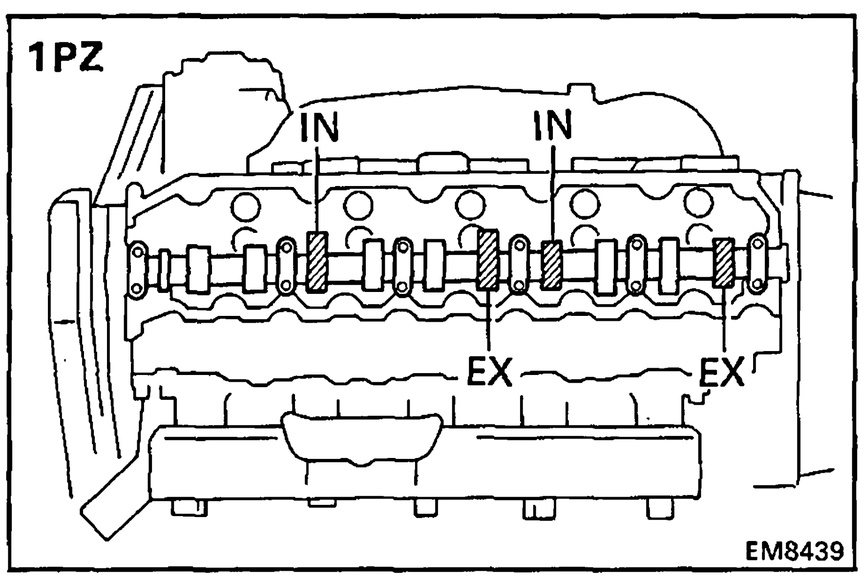

   (b) Turn the crankshaft one revolution (360°), and align the mark as above (See procedure step 3).
   (c) Check only the valves indicated in the illustration. Measure the valve clearance.
   (See procedure step (a))

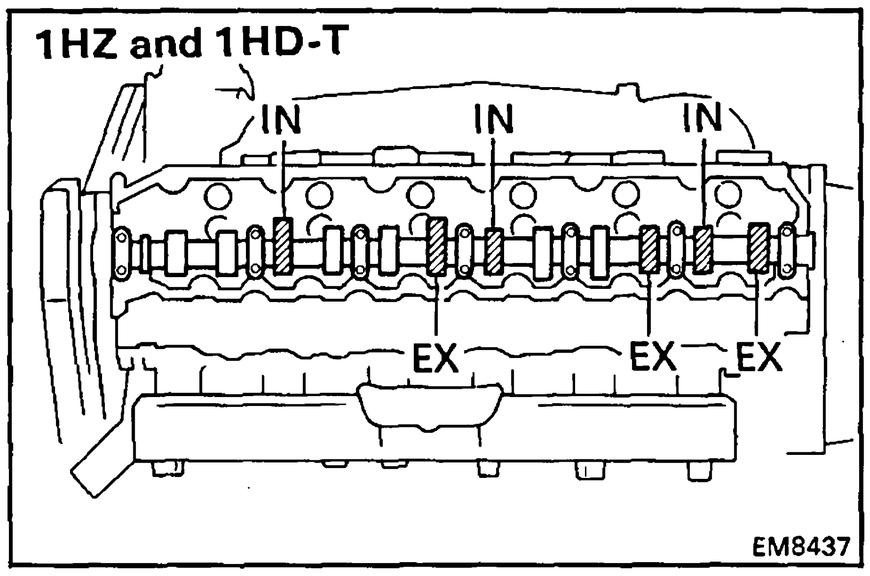

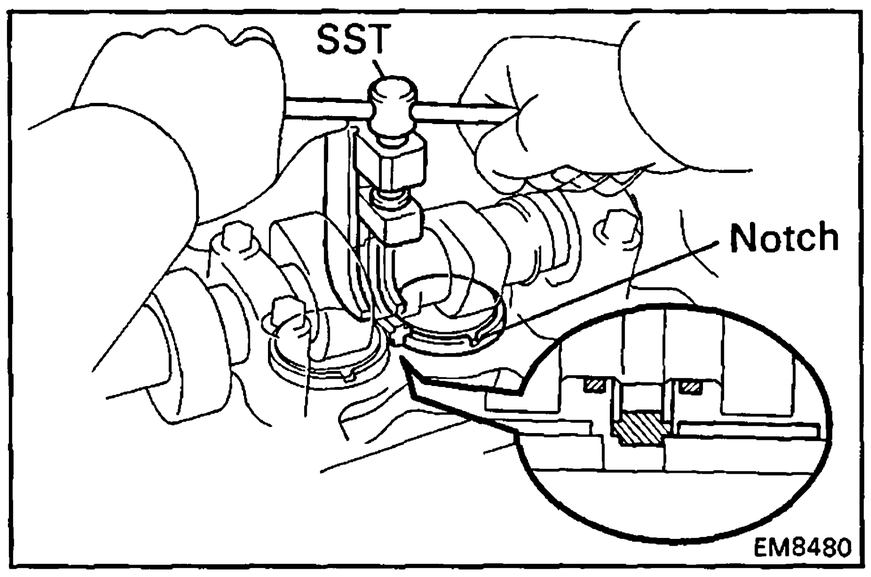

(d) Remove the adjusting shim.

- Turn the crankshaft to position the cam lobe of the camshaft on the adjusting valve upward.
- Using SST, press down the valve lifter.

SST 09248-64011

HINT: Before pressing down the valve lifter, position the notch on the exhaust manifold side.

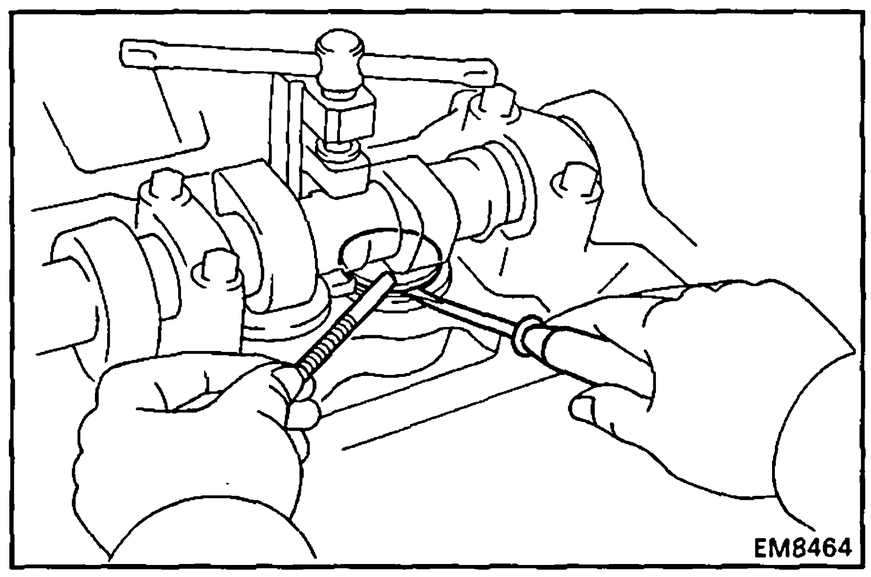

- Remove the adjusting shim with a small screwdriver and magnetic finger.

(e) Determine the replacement adjusting shim size by using following (Formula or Charts):

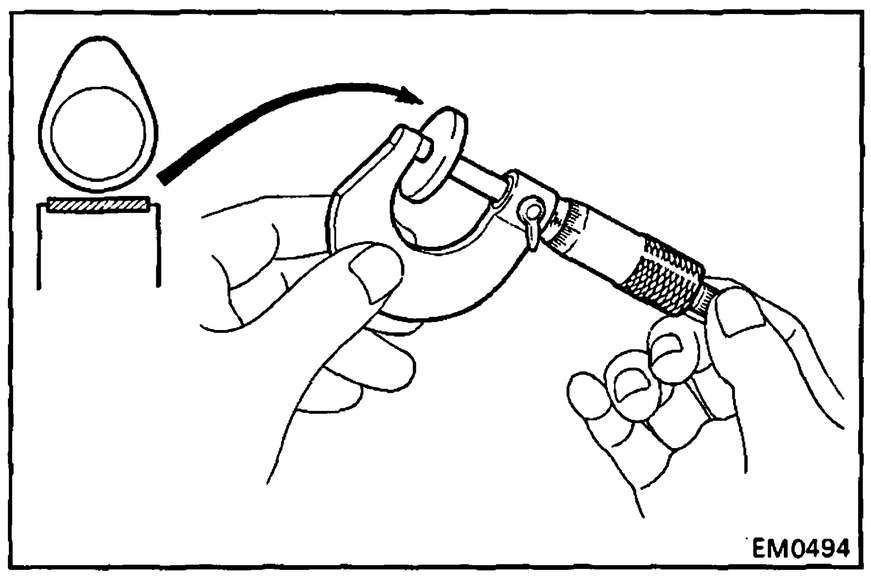

- Using a micrometer, measure the thickness of the removed shim.
- Calculate the thickness of the new shim so the valve clearance comes within specified value.

T ..... Thickness of used shim
A ..... Measured valve clearance
N ..... Thickness of new shim

Intake N = T + (A – 0.20 mm (0.008 in.))
Exhaust N = T + (A – 0.40 mm (0.016 in.))

- Select a new shim with a thickness as close as possible to the calculated values.

HINT: Shims are available in twenty sizes in increments of 0.05 mm (0.0020 in.), from 2.35 mm (0.0925 in.) to 3.30 mm (0.1299 in.)

(f) Install a new adjusting shim.

- Place a new adjusting shim on the valve lifter.
- Remove SST.

SST 09248-64011

(g) Recheck the valve clearance.

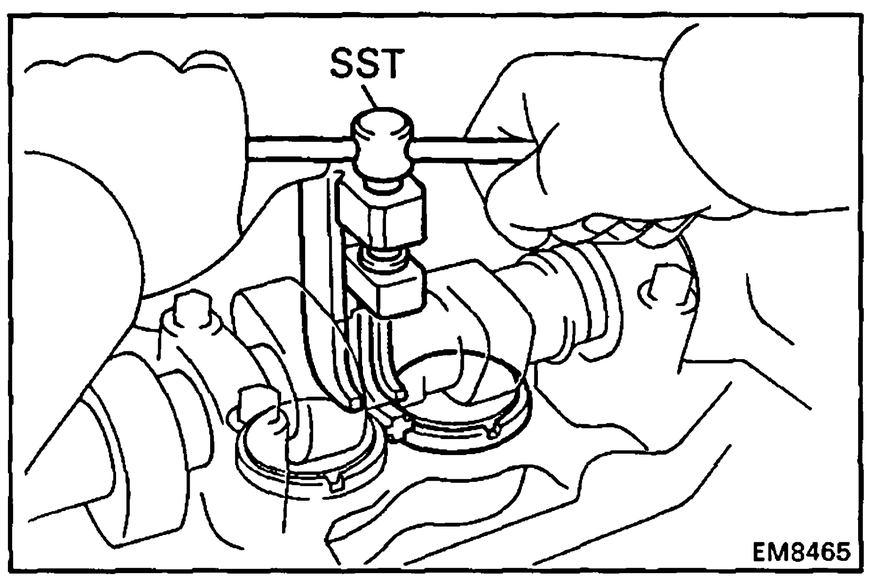

5. REINSTALL CYLINDER HEAD COVER
(See step 2 on page EM-38)

6. REINSTALL INTAKE PIPE
(See step 3 on page EM-38)

Adjusting Shim Selection Using Chart (Intake)

Measured clearance mm (in.) \ Installed shim thickness mm (in.)	2.340 (0.0921)	2.350 (0.0925)	2.360 (0.0929)	2.380 (0.0937)	2.400 (0.0945)	2.420 (0.0953)	2.440 (0.0961)	2.450 (0.0965)	2.460 (0.0969)	2.480 (0.0976)	2.500 (0.0984)	2.520 (0.0992)	2.540 (0.1000)	2.550 (0.1004)	2.560 (0.1008)	2.580 (0.1016)	2.600 (0.1024)	2.620 (0.1031)	2.640 (0.1039)	2.650 (0.1043)	2.660 (0.1047)	2.680 (0.1055)	2.700 (0.1063)	2.720 (0.1071)	2.740 (0.1079)	2.750 (0.1083)	2.760 (0.1087)	2.780 (0.1094)	2.800 (0.1102)	2.820 (0.1110)	2.840 (0.1118)	2.850 (0.1122)	2.860 (0.1126)	2.880 (0.1134)	2.900 (0.1142)	2.920 (0.1150)	2.940 (0.1157)	2.950 (0.1161)	2.960 (0.1165)	2.980 (0.1173)	3.000 (0.1181)	3.020 (0.1189)	3.040 (0.1197)	3.050 (0.1201)	3.060 (0.1205)	3.080 (0.1213)	3.100 (0.1220)	3.120 (0.1228)	3.140 (0.1236)	3.150 (0.1240)	3.160 (0.1244)	3.180 (0.1252)	3.200 (0.1260)	3.220 (0.1268)	3.240 (0.1276)	3.250 (0.1280)	3.260 (0.1283)	3.280 (0.1291)	3.300 (0.1299)
0.000 – 0.020 (0.0000 – 0.0008)											709	709	709	709	709	704	704	710	710	710	710	01	01	42	42	42	42	06	06	43	43	43	43	11	11	44	44	44	44	16	16	45	45	45	45	21	21	46	46	46	46	26	26	47	47	47	47	31	31
0.021 – 0.040 (0.0008 – 0.0016)										709	709	709	709	704	704	704	710	710	710	01	01	01	42	42	42	06	06	06	43	43	43	11	11	11	44	44	44	16	16	16	45	45	45	21	21	21	46	46	46	26	26	26	47	47	47	31	31	31	48
0.041 – 0.060 (0.0016 – 0.0024)									709	709	709	709	704	704	704	710	710	710	01	01	01	42	42	42	06	06	06	43	43	43	11	11	11	44	44	44	16	16	16	45	45	45	21	21	21	46	46	46	26	26	26	47	47	47	31	31	31	48	48
0.061 – 0.080 (0.0024 – 0.0031)							709	709	709	709	709	704	704	704	710	710	710	01	01	01	42	42	42	06	06	06	43	43	43	11	11	11	44	44	44	16	16	16	45	45	45	21	21	21	46	46	46	26	26	26	47	47	47	31	31	31	48	48	48
0.081 – 0.100 (0.0032 – 0.0039)						709	709	709	709	709	704	704	710	710	710	710	01	01	42	42	42	42	06	06	43	43	43	43	11	11	44	44	44	44	16	16	45	45	45	45	21	21	46	46	46	46	26	26	47	47	47	47	31	31	48	48	48	48	36
0.101 – 0.120 (0.0040 – 0.0047)					709	709	709	709	709	704	704	710	710	710	710	01	01	42	42	42	42	06	06	43	43	43	43	11	11	44	44	44	44	16	16	45	45	45	45	21	21	46	46	46	46	26	26	47	47	47	47	31	31	48	48	48	48	36	36
0.121 – 0.140 (0.0048 – 0.0055)				709	709	709	709	704	704	704	710	710	710	01	01	01	42	42	42	06	06	06	43	43	43	11	11	11	44	44	44	16	16	16	45	45	45	21	21	21	46	48	46	26	26	26	47	47	47	31	31	31	48	48	48	36	36	36	49
0.141 – 0.149 (0.0056 – 0.0059)			709	709	709	709	704	704	704	704	710	710	01	01	01	01	42	42	06	06	06	06	43	43	11	11	11	11	44	44	16	16	16	16	45	45	21	21	21	21	46	46	26	26	26	26	47	47	31	31	31	31	48	48	36	36	36	36	49
0.150 – 0.250 (0.0059 – 0.0098)																																																															
0.251 – 0.260 (0.0099 – 0.0102)	704	704	704	710	710	710	01	01	01	42	42	42	06	06	06	43	43	43	11	11	11	44	44	44	16	16	16	45	45	45	21	21	21	46	46	46	26	26	26	47	47	47	31	31	31	48	48	48	36	36	36	49	49	49	41	41	41	41
0.261 – 0.280 (0.0103 – 0.0110)	704	704	710	710	710	01	01	01	42	42	42	06	06	06	43	43	43	11	11	11	44	44	44	16	16	16	45	45	45	21	21	21	48	46	46	26	26	26	47	47	47	31	31	31	48	48	48	36	36	36	49	49	49	41	41	41	41
0.281 – 0.300 (0.0111 – 0.0118)	710	710	710	710	01	01	42	42	42	42	06	06	43	43	43	43	11	11	44	44	44	44	16	16	45	45	45	45	21	21	48	46	46	48	26	26	47	47	47	47	31	31	48	48	48	48	36	36	49	49	49	49	41	41	41	41
0.301 – 0.320 (0.0119 – 0.0126)	710	710	710	01	01	42	42	42	42	06	06	43	43	43	43	11	11	44	44	44	44	16	16	45	45	45	45	21	21	46	46	46	46	26	26	47	47	47	47	31	31	48	48	48	48	36	36	49	49	49	49	41	41	41				
0.321 – 0.340 (0.0128 – 0.0134)	710	01	01	01	42	42	42	06	06	06	43	43	43	11	11	11	44	44	44	16	16	16	45	45	45	21	21	21	46	46	46	26	26	26	47	47	47	31	31	31	48	48	48	36	36	36	49	49	49	41	41	41	41					
0.341 – 0.360 (0.0134 – 0.0142)	01	01	01	42	42	42	06	06	06	43	43	43	11	11	11	44	44	44	16	16	16	45	45	45	21	21	21	46	46	46	26	26	26	47	47	47	31	31	31	48	48	48	36	36	36	49	49	49	41	41	41	41						
0.361 – 0.380 (0.0142 – 0.0150)	01	01	42	42	42	06	06	06	43	43	43	11	11	11	44	44	44	16	16	16	45	45	45	21	21	21	46	46	46	26	26	26	47	47	47	31	31	31	48	48	48	36	36	36	49	49	49	41	41	41	41							
0.381 – 0.400 (0.0150 – 0.0157)	42	42	42	42	06	06	43	43	43	43	11	11	44	44	44	44	16	16	45	45	45	45	21	21	46	46	46	46	26	26	47	47	47	47	31	31	48	48	48	48	36	36	49	49	49	49	41	41	41	41								
0.401 – 0.420 (0.0158 – 0.0165)	42	42	42	06	06	43	43	43	43	11	11	44	44	44	44	16	16	45	45	45	45	21	21	48	46	46	46	26	26	47	47	47	47	31	31	48	48	48	48	36	36	49	49	49	49	41	41	41										
0.421 – 0.440 (0.0166 – 0.0173)	42	06	06	06	43	43	43	11	11	11	44	44	44	16	16	16	45	45	45	21	21	21	48	46	46	26	26	26	47	47	47	31	31	31	48	48	48	36	36	36	49	49	49	41	41	41	41											
0.441 – 0.460 (0.0174 – 0.0181)	06	06	06	43	43	43	11	11	11	44	44	44	16	16	16	45	45	45	21	21	21	46	46	46	26	26	26	47	47	47	31	31	31	48	48	48	36	36	36	49	49	49	41	41	41	41												
0.461 – 0.480 (0.0181 – 0.0189)	06	06	43	43	43	11	11	11	44	44	44	16	16	16	45	45	45	21	21	21	46	46	46	26	26	26	47	47	47	31	31	31	48	48	48	36	36	36	49	49	49	41	41	41	41													
0.481 – 0.500 (0.0189 – 0.0197)	43	43	43	43	11	11	44	44	44	44	16	16	45	45	45	45	21	21	46	46	46	46	26	26	47	47	47	47	31	31	48	48	48	48	36	36	49	49	49	49	41	41	41	41														
0.501 – 0.520 (0.0197 – 0.0205)	43	43	43	11	11	44	44	44	44	16	16	45	45	45	45	21	21	46	46	46	46	26	26	47	47	47	47	31	31	48	48	48	48	36	36	49	49	49	49	41	41	41																
0.521 – 0.540 (0.0205 – 0.0213)	43	11	11	11	44	44	44	16	16	16	45	45	45	21	21	21	46	46	46	26	26	26	47	47	47	31	31	31	48	48	48	36	36	36	49	49	49	41	41	41	41																	
0.541 – 0.560 (0.0213 – 0.0220)	11	11	11	44	44	44	16	16	16	45	45	45	21	21	21	46	46	46	26	26	26	47	47	47	31	31	31	48	48	48	36	36	36	49	49	49	41	41	41	41																		
0.561 – 0.580 (0.0221 – 0.0228)	11	11	44	44	44	16	16	16	45	45	45	21	21	21	46	46	46	26	26	26	47	47	47	31	31	31	48	48	48	36	36	36	49	49	49	41	41	41	41																			
0.581 – 0.600 (0.0229 – 0.0236)	44	44	44	44	16	16	45	45	45	45	21	21	46	46	46	46	26	26	47	47	47	47	31	31	48	48	48	48	36	36	49	49	49	49	41	41	41	41																				
0.601 – 0.620 (0.0237 – 0.0244)	44	44	44	16	16	45	45	45	45	21	21	46	46	46	46	26	26	47	47	47	47	31	31	48	48	48	48	36	36	49	49	49	49	41	41	41																						
0.621 – 0.640 (0.0244 – 0.0252)	44	16	16	16	45	45	45	21	21	21	46	46	46	26	26	26	47	47	47	31	31	31	48	48	48	36	36	36	49	49	49	41	41	41	41																						
0.641 – 0.660 (0.0252 – 0.0260)	16	16	16	45	45	45	21	21	21	46	46	46	26	26	26	47	47	47	31	31	31	48	48	48	36	36	36	49	49	49	41	41	41	41																						
0.661 – 0.680 (0.0260 – 0.0268)	16	16	45	45	45	21	21	21	46	46	46	26	26	26	47	47	47	31	31	31	48	48	48	36	36	36	49	49	49	41	41	41	41																						
0.681 – 0.700 (0.0268 – 0.0276)	45	45	45	45	21	21	46	46	46	46	26	26	47	47	47	47	31	31	48	48	48	48	36	36	49	49	49	49	41	41	41	41																						
0.701 – 0.720 (0.0276 – 0.0283)	45	45	45	21	21	46	46	48	46	26	26	47	47	47	47	31	31	48	48	48	48	36	36	49	49	49	49	41	41	41																										
0.721 – 0.740 (0.0284 – 0.0291)	45	21	21	21	46	46	46	26	26	26	47	47	47	31	31	31	48	48	48	36	36	36	49	49	49	41	41	41	41																										
0.741 – 0.760 (0.0292 – 0.0299)	21	21	21	46	46	46	26	26	26	47	47	47	31	31	31	48	48	48	36	36	36	49	49	49	41	41	41	41																										
0.761 – 0.780 (0.0300 – 0.0307)	21	21	46	46	48	26	26	26	47	47	47	31	31	31	48	48	48	36	36	36	49	49	49	41	41	41	41																										
0.781 – 0.800 (0.0307 – 0.0315)	48	46	46	46	26	26	47	47	47	47	31	31	48	48	48	48	36	36	49	49	49	49	41	41	41	41																										
0.801 – 0.820 (0.0315 – 0.0323)	46	46	48	26	26	47	47	47	47	31	31	48	48	48	48	36	36	49	49	49	49	41	41	41																												
0.821 – 0.840 (0.0323 – 0.0331)	46	26	26	26	47	47	47	31	31	31	48	48	48	36	36	36	49	49	49	41	41	41	41																												
0.841 – 0.860 (0.0331 – 0.0339)	26	26	26	47	47	47	31	31	31	48	48	48	36	36	36	49	49	49	41	41	41	41																												
0.861 – 0.880 (0.0339 – 0.0346)	26	26	47	47	47	31	31	31	48	48	48	36	36	36	49	49	49	41	41	41	41																												
0.881 – 0.900 (0.0347 – 0.0354)	47	47	47	47	31	31	48	48	48	48	36	36	48	49	49	49	41	41	41	41																												
0.901 – 0.920 (0.0355 – 0.0362)	47	47	47	31	31	48	48	48	48	36	36	49	49	49	49	41	41	41																														
0.921 – 0.940 (0.0363 – 0.0370)	47	31	31	31	48	48	48	36	36	36	48	49	49	41	41	41	41																															
0.941 – 0.960 (0.0370 – 0.0378)	31	31	31	48	48	48	36	36	36	49	49	49	41	41	41	41																																
0.961 – 0.980 (0.0378 – 0.0386)	31	31	48	48	48	36	36	36	49	49	49	41	41	41	41																																	
0.981 – 1.000 (0.0386 – 0.0394)	48	48	48	48	36	36	49	49	49	49	41	41	41	41																																		
1.001 – 1.020 (0.0394 – 0.0402)	48	48	48	36	36	49	49	49	49	41	41	41																																				
1.021 – 1.040 (0.0402 – 0.0409)	48	36	36	36	49	49	49	41	41	41	41																																					
1.041 – 1.060 (0.0410 – 0.0417)	36	36	36	49	49	49	41	41	41	41																																						
1.061 – 1.080 (0.0418 – 0.0425)	36	36	49	49	49	41	41	41	41																																							
1.081 – 1.100 (0.0426 – 0.0433)	49	49	49	49	41	41	41	41																																								
1.101 – 1.120 (0.0433 – 0.0441)	49	49	49	41	41	41																																										
1.121 – 1.140 (0.0441 – 0.0449)	49	41	41	41	41																																											
1.141 – 1.160 (0.0449 – 0.0457)	41	41	41	41																																												
1.161 – 1.180 (0.0457 – 0.0465)	41	41	41																																													
1.181 – 1.200 (0.0465 – 0.0472)	41	41																																														
1.201 – 1.210 (0.0473 – 0.0476)	41																																															

New shim thickness mm (in.)

Shim No.	Thickness	Shim No.	Thickness
709	2.35 (0.0925)	45	2.85 (0.1122)
704	2.40 (0.0945)	21	2.90 (0.1142)
710	2.45 (0.0965)	46	2.95 (0.1161)
01	2.50 (0.0984)	26	3.00 (0.1181)
42	2.55 (0.1004)	47	3.05 (0.1201)
06	2.60 (0.1024)	31	3.10 (0.1220)
43	2.65 (0.1043)	48	3.15 (0.1240)
11	2.70 (0.1063)	36	3.20 (0.1260)
44	2.75 (0.1083)	49	3.25 (0.1280)
16	2.80 (0.1102)	41	3.30 (0.1299)

Intake valve clearance (Cold):
0.15 – 0.25 mm (0.006 – 0.010 in.)

EXAMPLE: The 2.800 mm (0.1102 in.) shim is installed and the measured clearance is 0.300 mm (0.0118 in.). Replace the 2.800 mm (0.1102 in.) shim with a No.21 shim.

Adjusting Shim Selection Using Chart (Exhaust)

Measured clearance mm (in.) \ Installed shim thickness mm (in.)	2.340 (0.0921)	2.350 (0.0925)	2.360 (0.0929)	2.380 (0.0937)	2.400 (0.0945)	2.420 (0.0953)	2.440 (0.0961)	2.450 (0.0965)	2.460 (0.0969)	2.480 (0.0976)	2.500 (0.0984)	2.520 (0.0992)	2.540 (0.1000)	2.550 (0.1004)	2.560 (0.1008)	2.580 (0.1016)	2.600 (0.1024)	2.620 (0.1031)	2.640 (0.1039)	2.650 (0.1043)	2.660 (0.1047)	2.680 (0.1055)	2.700 (0.1063)	2.720 (0.1071)	2.740 (0.1079)	2.750 (0.1083)	2.760 (0.1087)	2.780 (0.1094)	2.800 (0.1102)	2.820 (0.1110)	2.840 (0.1118)	2.850 (0.1122)	2.860 (0.1126)	2.880 (0.1134)	2.900 (0.1142)	2.920 (0.1150)	2.940 (0.1157)	2.950 (0.1161)	2.960 (0.1165)	2.980 (0.1173)	3.000 (0.1181)	3.020 (0.1189)	3.040 (0.1197)	3.050 (0.1201)	3.060 (0.1205)	3.080 (0.1213)	3.100 (0.1220)	3.120 (0.1228)	3.140 (0.1236)	3.150 (0.1240)	3.160 (0.1244)	3.180 (0.1252)	3.200 (0.1260)	3.220 (0.1268)	3.240 (0.1276)	3.250 (0.1280)	3.260 (0.1283)	3.280 (0.1291)	3.300 (0.1299)
0.000 – 0.020 (0.0000 – 0.0008)																							709	709	709	709	709	704	704	710	710	01	01	01	01	42	42	06	06	06	06	43	43	11	11	11	11	44	44	16	16	16	16	45	45	21	21	21	21
0.021 – 0.040 (0.0008 – 0.0016)																						709	709	709	709	704	704	704	710	710	710	01	01	01	42	42	42	06	06	06	43	43	43	11	11	11	44	44	44	16	16	16	45	45	45	21	21	21	46
0.041 – 0.060 (0.0016 – 0.0024)																					709	709	709	709	704	704	704	710	710	710	01	01	01	42	42	42	06	06	06	43	43	43	11	11	11	44	44	44	16	16	16	45	45	45	21	21	21	46	46
0.061 – 0.080 (0.0024 – 0.0031)																			709	709	709	709	709	704	704	704	710	710	710	01	01	01	42	42	42	06	06	06	43	43	43	11	11	11	44	44	44	16	16	16	45	45	45	21	21	21	46	46	46
0.081 – 0.100 (0.0032 – 0.0039)																		709	709	709	709	704	704	704	710	710	710	710	01	01	42	42	42	42	06	06	43	43	43	43	11	11	44	44	44	44	16	16	45	45	45	45	21	21	46	46	46	46	26
0.101 – 0.120 (0.0040 – 0.0047)																	709	709	709	709	704	704	704	710	710	710	710	01	01	42	42	42	42	06	06	43	43	43	43	11	11	44	44	44	44	16	16	45	45	45	45	21	21	46	46	46	46	26	26
0.121 – 0.140 (0.0048 – 0.0055)																709	709	709	709	704	704	704	710	710	710	01	01	01	42	42	42	06	06	06	43	43	43	11	11	11	44	44	44	16	16	16	45	45	45	21	21	21	46	46	46	26	26	26	47
0.141 – 0.160 (0.0056 – 0.0063)															709	709	709	709	704	704	704	710	710	710	01	01	01	42	42	42	06	06	06	43	43	43	11	11	11	44	44	44	16	16	16	45	45	45	21	21	21	46	46	46	26	26	26	47	47
0.161 – 0.180 (0.0063 – 0.0071)													709	709	709	709	709	704	704	704	710	710	710	01	01	01	42	42	42	06	06	06	43	43	43	11	11	11	44	44	44	16	16	16	45	45	45	21	21	21	46	46	46	26	26	26	47	47	47
0.0181 – 0.200 (0.0071 – 0.0079)												709	709	709	709	709	704	704	710	710	710	710	01	01	42	42	42	42	06	06	43	43	43	43	11	11	44	44	44	44	16	16	45	45	45	45	21	21	46	46	46	46	26	26	47	47	47	47	31
0.201 – 0.220 (0.0079 – 0.0087)											709	709	709	709	709	704	704	710	710	710	710	01	01	42	42	42	42	06	06	43	43	43	43	11	11	44	44	44	44	16	16	45	45	45	45	21	21	46	46	46	46	26	26	47	47	47	47	31	31
0.221 – 0.240 (0.0087 – 0.0094)										709	709	709	709	704	704	704	710	710	710	01	01	01	42	42	42	06	06	06	43	43	43	11	11	11	44	44	44	16	16	16	45	45	45	21	21	21	46	46	46	26	26	26	47	47	47	31	31	31	48
0.241 – 0.260 (0.0095 – 0.0102)									709	709	709	709	704	704	704	710	710	710	01	01	01	42	42	42	06	06	06	43	43	43	11	11	11	44	44	44	16	16	16	45	45	45	21	21	21	46	46	46	26	26	26	47	47	47	31	31	31	48	48
0.261 – 0.280 (0.0103 – 0.0110)							709	709	709	709	709	704	704	704	710	710	710	01	01	01	42	42	42	06	06	06	43	43	43	11	11	11	44	44	44	16	16	16	45	45	45	21	21	21	46	46	46	26	26	26	47	47	47	31	31	31	48	48	48
0.281 – 0.300 (0.0111 – 0.0118)						709	709	709	709	709	704	704	710	710	710	710	01	01	42	42	42	42	06	06	43	43	43	43	11	11	44	44	44	44	16	16	45	45	45	45	21	21	46	46	46	46	26	26	47	47	47	47	31	31	48	48	48	48	36
0.301 – 0.320 (0.0119 – 0.0126)					709	709	709	709	709	704	704	710	710	710	710	01	01	42	42	42	42	06	06	43	43	43	43	11	11	44	44	44	44	16	16	45	45	45	45	21	21	46	46	46	46	26	26	47	47	47	47	31	31	48	48	48	48	36	36
0.321 – 0.340 (0.0126 – 0.0134)				709	709	709	709	704	704	704	710	710	710	01	01	01	42	42	42	06	06	06	43	43	43	11	11	11	44	44	44	16	16	16	45	45	45	21	21	21	46	46	46	26	26	26	47	47	47	31	31	31	48	48	48	36	36	36	49
0.341 – 0.349 (0.0134 – 0.0137)			709	709	709	709	704	704	710	710	710	710	01	01	01	01	42	42	06	06	06	06	43	43	11	11	11	11	44	44	16	16	16	16	45	45	21	21	21	21	46	46	26	26	26	26	47	47	31	31	31	31	48	48	36	36	36	36	49
0.350 – 0.450 (0.0138 – 0.0179)																																																											
0.451 – 0.460 (0.0178 – 0.0181)	704	704	704	710	710	710	01	01	01	42	42	42	06	06	06	43	43	43	11	11	11	44	44	44	16	16	16	45	45	45	21	21	21	46	46	46	26	26	26	47	47	47	31	31	31	48	48	48	36	36	36	49	49	49	41	41	41	41
0.461 – 0.480 (0.0181 – 0.0189)	704	704	710	710	710	01	01	01	42	42	42	06	06	06	43	43	43	11	11	11	44	44	44	16	16	16	45	45	45	21	21	21	46	46	46	26	26	26	47	47	47	31	31	31	48	48	48	36	36	36	49	49	49	41	41	41	41
0.481 – 0.500 (0.0189 – 0.0197)	710	710	710	710	01	01	42	42	42	42	06	06	43	43	43	43	11	11	44	44	44	44	16	16	45	45	45	45	21	21	46	46	46	46	26	26	47	47	47	47	31	31	48	48	48	48	36	36	49	49	49	49	41	41	41	41
0.501 – 0.520 (0.0197 – 0.0205)	710	710	710	01	01	42	42	42	42	06	06	43	43	43	43	11	11	44	44	44	44	16	16	45	45	45	45	21	21	46	46	46	46	26	26	47	47	47	47	31	31	48	48	48	48	36	36	36	49	49	49	41	41	41				
0.521 – 0.540 (0.0205 – 0.0213)	710	01	01	01	42	42	42	06	06	06	43	43	43	11	11	11	44	44	44	16	16	16	45	45	45	21	21	21	46	46	46	26	26	26	47	47	47	31	31	31	48	48	48	36	36	36	49	49	49	41	41	41	41				
0.541 – 0.560 (0.0213 – 0.0222)	01	01	01	42	42	42	06	06	06	43	43	43	11	11	11	44	44	44	16	16	16	45	45	45	21	21	21	46	46	46	26	26	26	47	47	47	31	31	31	48	48	48	36	36	36	49	49	49	41	41	41	41					
0.561 – 0.580 (0.0221 – 0.0228)	01	01	42	42	42	06	06	06	43	43	43	11	11	11	44	44	44	16	16	16	45	45	45	21	21	21	46	46	46	26	26	26	47	47	47	31	31	31	48	48	48	36	36	36	49	49	49	41	41	41	41						
0.581 – 0.600 (0.0229 – 0.0236)	42	42	42	42	06	06	43	43	43	43	11	11	44	44	44	44	16	16	45	45	45	45	21	21	46	46	46	46	26	26	47	47	47	47	31	31	48	48	48	48	36	36	49	49	49	49	41	41	41	41							
0.601 – 0.620 (0.0237 – 0.0244)	42	42	42	06	06	43	43	43	43	11	11	44	44	44	44	16	16	45	45	45	45	21	21	46	46	46	46	26	26	47	47	47	47	31	31	48	48	48	36	36	49	49	49	49	41	41	41	41									
0.621 – 0.640 (0.0244 – 0.0252)	42	06	06	06	43	43	43	11	11	11	44	44	44	16	16	16	45	45	45	21	21	21	46	46	46	26	26	26	47	47	47	31	31	31	48	48	48	36	36	36	49	49	49	41	41	41	41										
0.641 – 0.660 (0.0252 – 0.0260)	06	06	06	43	43	43	11	11	11	44	44	44	16	16	16	45	45	45	21	21	21	46	46	46	26	26	26	47	47	47	31	31	31	48	48	48	36	36	36	49	49	49	41	41	41	41											
0.661 – 0.680 (0.0260 – 0.0268)	06	06	43	43	43	11	11	11	44	44	44	16	16	16	45	45	45	21	21	21	46	46	46	26	26	26	47	47	47	31	31	31	48	48	48	36	36	36	49	49	49	41	41	41	41												
0.681 – 0.700 (0.0268 – 0.0276)	43	43	43	43	11	11	44	44	44	44	16	16	45	45	45	45	21	21	46	46	46	46	26	26	47	47	47	47	31	31	48	48	48	48	36	36	49	49	49	49	41	41	41	41													
0.701 – 0.720 (0.0276 – 0.0283)	43	43	43	11	11	44	44	44	44	16	16	45	45	45	45	21	21	46	46	46	46	26	26	47	47	47	47	31	31	48	48	48	48	36	36	49	49	49	49	41	41	41															
0.721 – 0.740 (0.0284 – 0.0291)	43	11	11	11	44	44	44	16	16	16	45	45	45	21	21	21	46	46	46	26	26	26	47	47	47	31	31	31	48	48	48	36	36	36	49	49	49	41	41	41	41																
0.741 – 0.760 (0.0292 – 0.0299)	11	11	11	44	44	44	16	16	16	45	45	45	21	21	21	46	46	46	26	26	26	47	47	47	31	31	31	48	48	48	36	36	36	49	49	49	41	41	41	41																	
0.761 – 0.780 (0.0300 – 0.0307)	11	11	44	44	44	16	16	16	45	45	45	21	21	21	46	46	46	26	26	26	47	47	47	31	31	31	49	48	48	36	36	36	49	49	49	41	41	41	41																		
0.781 – 0.800 (0.0307 – 0.0315)	44	44	44	44	16	16	45	45	45	45	21	21	46	46	46	46	26	26	47	47	47	47	31	31	48	48	46	48	36	36	49	49	49	49	41	41	41	41																			
0.801 – 0.820 (0.0315 – 0.0323)	44	44	44	16	16	45	45	45	45	21	21	46	46	46	46	26	26	47	47	47	47	31	31	48	48	48	48	36	36	49	49	49	49	41	41	41																					
0.821 – 0.840 (0.0323 – 0.0331)	44	16	16	16	45	45	45	21	21	21	46	46	46	26	26	26	47	47	47	31	31	31	48	48	48	48	36	36	36	49	49	49	41	41	41																					
0.841 – 0.860 (0.0331 – 0.0339)	16	16	16	45	45	45	21	21	21	46	46	46	26	26	26	47	47	47	31	31	31	48	48	46	36	36	36	49	49	49	41	41	41	41																					
0.861 – 0.880 (0.0339 – 0.0346)	16	16	45	45	45	21	21	21	46	46	46	26	26	26	47	47	47	31	31	31	48	48	48	36	36	36	49	49	49	41	41	41	41																					
0.881 – 0.900 (0.0347 – 0.0354)	45	45	45	45	21	21	46	46	48	48	26	26	47	47	47	47	31	31	48	48	48	48	36	36	49	49	49	49	41	41	41	41																					
0.901 – 0.920 (0.0355 – 0.0362)	45	45	45	21	21	48	46	48	48	26	26	47	47	47	47	31	31	48	48	48	48	36	36	49	49	49	49	41	41	41																									
0.921 – 0.940 (0.0363 – 0.0370)	45	21	21	21	48	46	46	26	26	26	47	47	47	31	31	31	48	48	48	36	36	36	49	49	49	41	41	41	41																									
0.941 – 0.960 (0.0370 – 0.0378)	21	21	21	46	46	46	26	26	26	47	47	47	31	31	31	48	48	48	36	36	36	49	49	49	41	41	41	41																									
0.961 – 0.980 (0.0378 – 0.0386)	21	21	46	46	46	26	26	26	47	47	47	31	31	31	48	48	48	36	36	36	49	49	49	41	41	41	41																									
0.981 – 1.000 (0.0386 – 0.0394)	46	46	46	46	26	26	47	47	47	47	31	31	48	48	48	48	36	36	49	49	49	49	41	41	41	41																									
1.001 – 1.020 (0.0394 – 0.0402)	46	46	46	26	26	47	47	47	47	31	31	46	48	48	48	36	38	49	49	49	49	41	41	41																											
1.021 – 1.040 (0.0402 – 0.0409)	46	26	26	26	47	47	47	31	31	31	48	48	48	48	36	36	36	49	49	49	41	41	41																											
1.041 – 1.060 (0.0410 – 0.0417)	26	26	26	47	47	47	31	31	31	48	48	48	36	36	36	49	49	49	41	41	41	41																											
1.061 – 1.080 (0.0418 – 0.0425)	26	26	47	47	47	31	31	31	48	48	48	36	36	36	49	49	49	41	41	41	41																											
1.081 – 1.100 (0.0426 – 0.0433)	47	47	47	47	31	31	48	48	48	36	36	49	49	49	49	41	41	41	41	41																											
1.101 – 1.120 (0.0433 – 0.0441)	47	47	47	31	31	48	48	48	36	36	49	49	49	49	41	41	41	41																													
1.121 – 1.140 (0.0441 – 0.0449)	47	31	31	31	48	48	48	36	36	36	49	49	49	41	41	41	41																														
1.141 – 1.160 (0.0449 – 0.0457)	31	31	31	48	48	48	36	36	36	49	49	49	41	41	41	41																															
1.161 – 1.180 (0.0457 – 0.0465)	31	48	48	48	48	36	36	36	49	49	49	41	41	41	41																																
1.181 – 1.200 (0.0465 – 0.0472)	48	48	48	48	36	36	49	49	49	49	41	41	41	41																																	
1.201 – 1.220 (0.0473 – 0.0480)	48	48	48	36	36	49	49	49	49	41	41	41																																			
1.221 – 1.240 (0.0481 – 0.0488)	48	48	36	36	49	49	49	41	41	41	41																																				
1.241 – 1.260 (0.0489 – 0.0496)	36	36	36	49	49	49	41	41	41	41																																					
1.261 – 1.280 (0.0496 – 0.0504)	36	36	49	49	49	41	41	41	41																																						
1.281 – 1.300 (0.0504 – 0.0512)	49	48	49	49	41	41	41	41																																							
1.301 – 1.320 (0.0512 – 0.0520)	49	49	48	41	41	41																																									
1.321 – 1.340 (0.0520 – 0.0528)	49	41	41	41	41																																										
1.341 – 1.360 (0.0528 – 0.0535)	41	41	41	41																																											
1.361 – 1.380 (0.0536 – 0.0543)	41	41	41																																												
1.381 – 1.400 (0.0544 – 0.0551)	41	41																																													

New shim thickness mm (in.)

Shim No.	Thickness	Shim No.	Thickness
709	2.35 (0.0925)	45	2.85 (0.1122)
704	2.40 (0.0945)	21	2.90 (0.1142)
710	2.45 (0.0965)	46	2.95 (0.1161)
01	2.50 (0.0984)	26	3.00 (0.1181)
42	2.55 (0.1004)	47	3.05 (0.1201)
06	2.60 (0.1024)	31	3.10 (0.1220)
43	2.65 (0.1043)	48	3.15 (0.1240)
11	2.70 (0.1063)	36	3.20 (0.1260)
44	2.75 (0.1083)	49	3.25 (0.1280)
16	2.80 (0.1102)	41	3.30 (0.1299)

Exhaust valve clearance:
0.35 – 0.45 mm (0.014 – 0.018 in.)

EXAMPLE: The 2.800 mm (0.1102 in.) shim is installed and the measured clearance is 0.300 mm (0.0118 in.). Replace the 2.800 mm (0.1102 in.) shim with a No.11 shim.

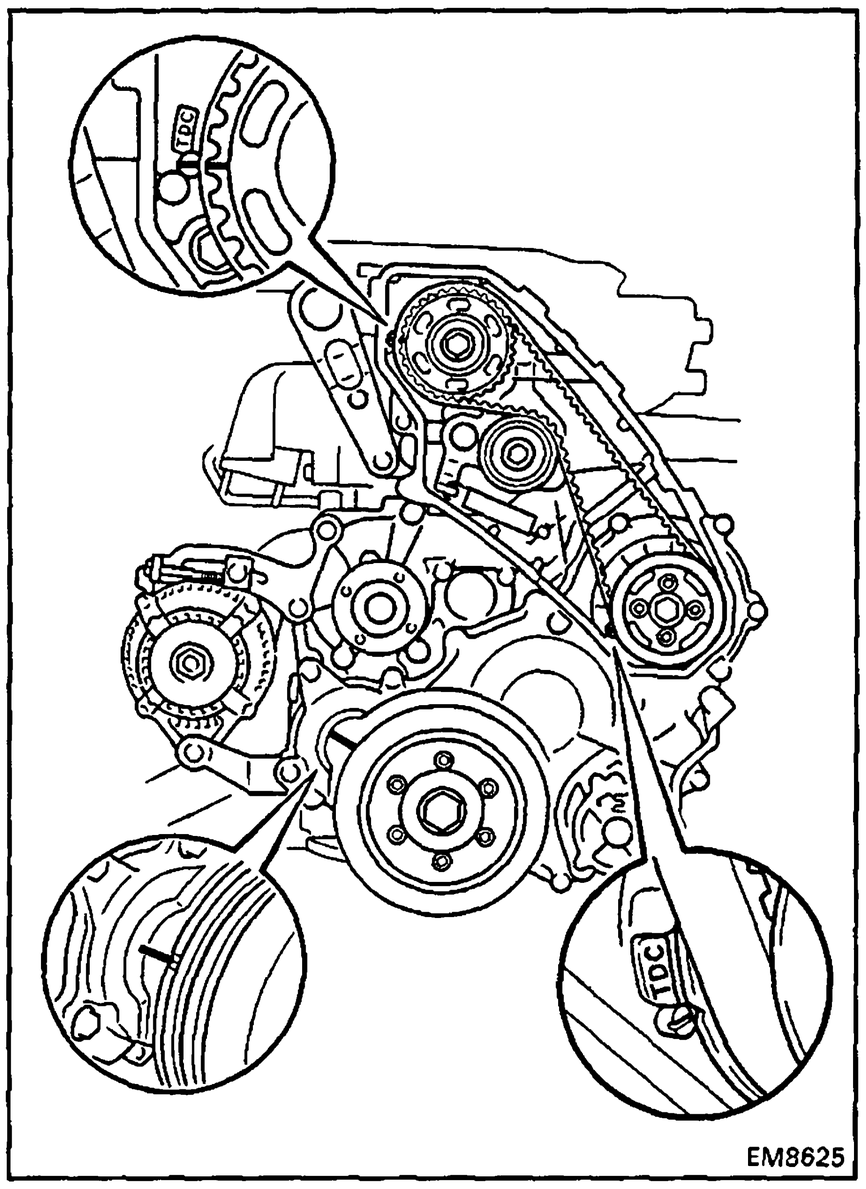

ADJUSTMENT OF INJECTION TIMING

1. **(1PZ)**
   REMOVE TIMING BELT COVER
   (See step 1 on page EM-33)

2. **(1PZ)**
   SET NO.1 CYLINDER TO TDC/COMPRESSION

   Turn the crankshaft pulley clockwise, and align each pulley groove with the timing marks (TDC mark) as shown in the illustration.

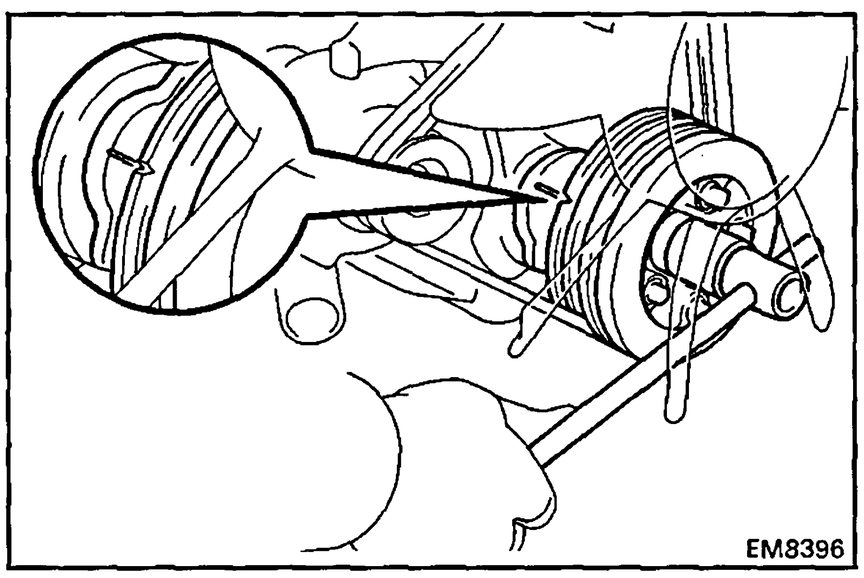

3. **(1HZ and 1HD-T)**
   SET NO.1 OR NO.6 CYLINDER TO TDC/COMPRESSION

   Turn the crankshaft pulley clockwise, and align its groove with the timing gear cover groove.

4. **(1HD-T w/ BACS)**
   REMOVE AIR CONTROL VALVE (ACV)

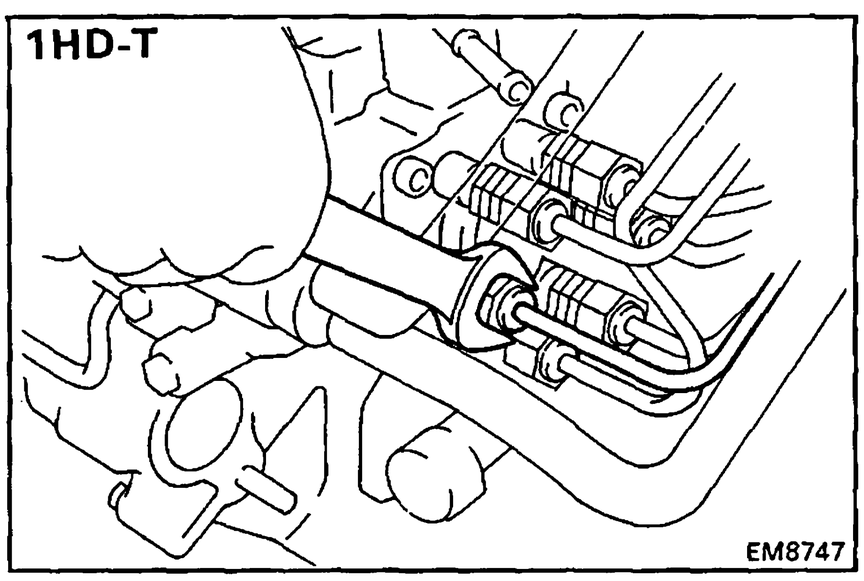

5. **INSTALL SST AND DIAL INDICATOR**
   (a) (1HD-T)
   Loosen the union nut of the No.5 cylinder injection pipe.

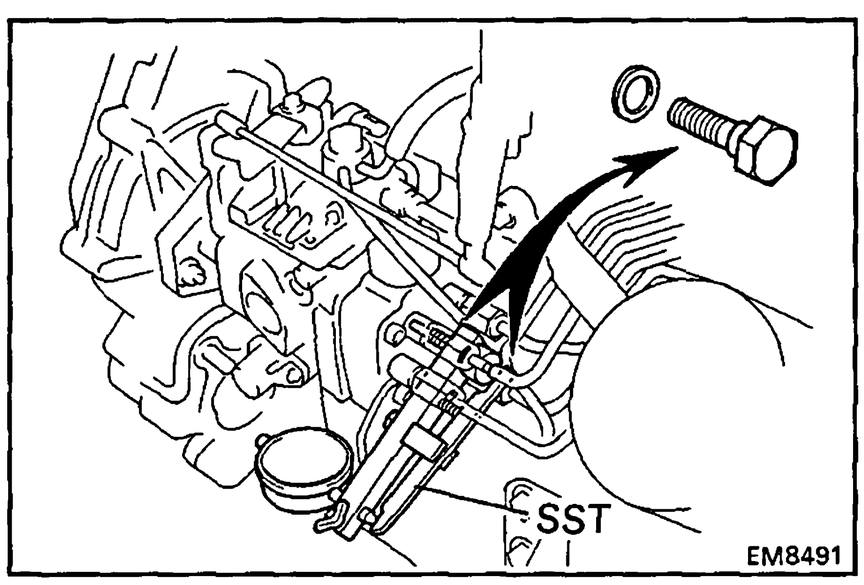

   (b) Remove the plug bolt from the distributive head plug of the injection pump.
   (c) Install SST (plunger stroke measuring tool) and a dial indicator to the plug bolt hole of distributive head plug.

SST 09275-54011

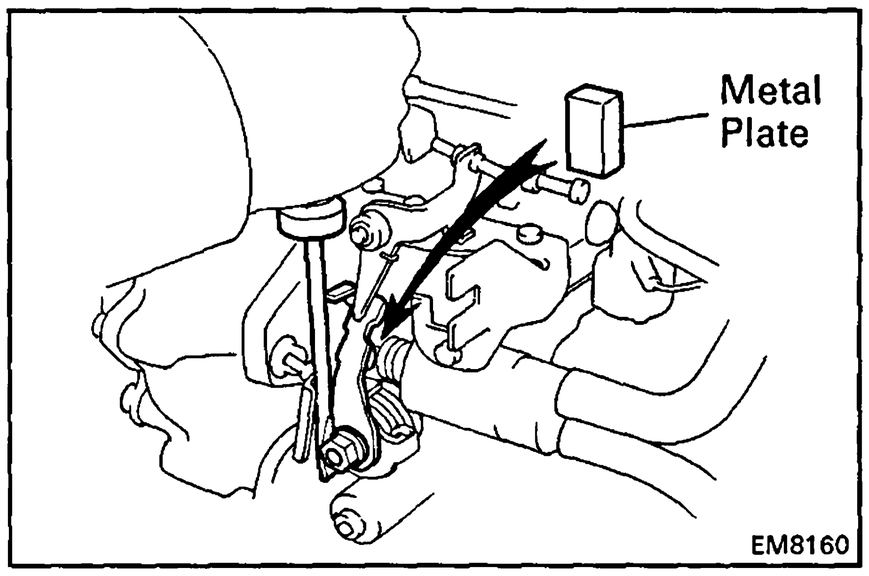

6. (w/ ACSD)
RELEASE ACSD ADVANCE

(a) Using a screwdriver, turn the cold starting lever counterclockwise approx. 20°.

(b) Put a metal plate (thickness of 3.5 – 7.5 mm (0.135 – 0.295 in.)) between the cold starting lever and thermo wax plunger.

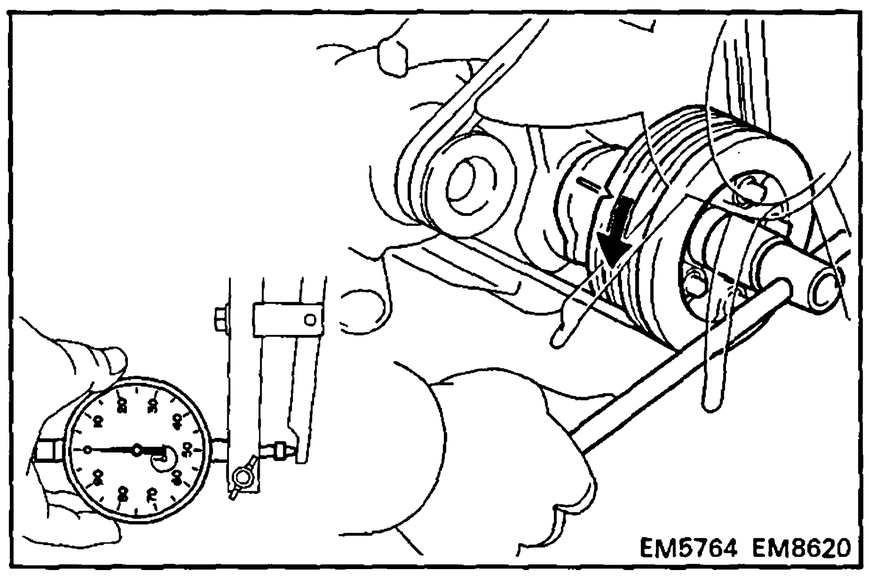

7. **ADJUST INJECTION TIMING**

(a) Slowly rotate the crankshaft pulley counterclockwise and set the dial indicator at 0 mm (0 in.) when the dial indicator reaches the minimum value.

NOTICE: Compared with previous four cylinder engines, the 0 mm (0 in.) position (crank angle) is reduced, so perform the operation carefully. (ex. 1PZ)

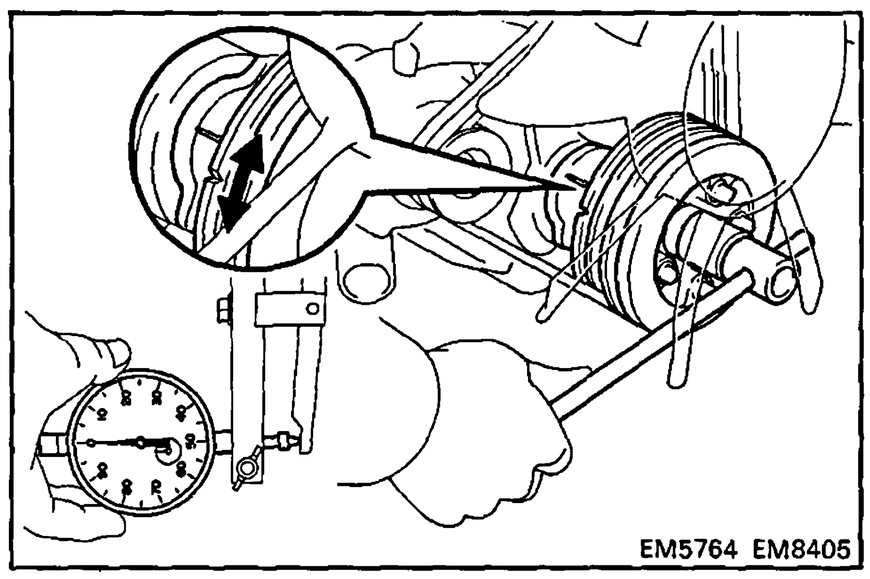

(b) Turn the crankshaft to the left and right and check that the dial indicator shows the minimum value.

NOTICE: Make sure that the minimum value is set at 0 mm (0 in.).

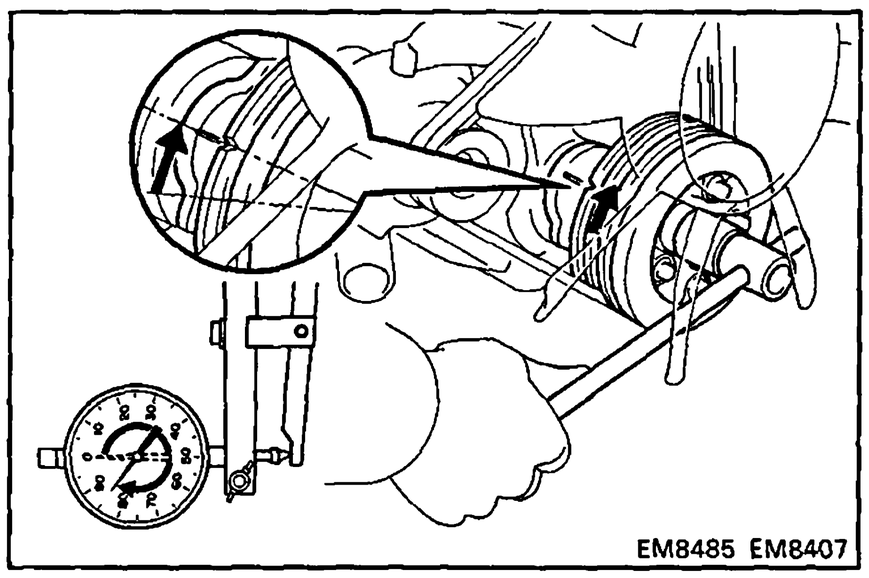

(c) Slowly rotate the crankshaft pulley clockwise until pulley groove is aligned with the timing gear cover groove.

(d) Measure the plunger stroke.

Plunger stroke:

1PZ	**0.82 – 0.88 mm (0.0323 – 0.0346 in.)**
1HZ	**1.03 – 1.09 mm (0.0406 – 0.0429 in.)**
1HD-T	**1.29 – 1.35 mm (0.0508 – 0.0531 in.)**

(e) Repeat steps (a) to (c) several times.

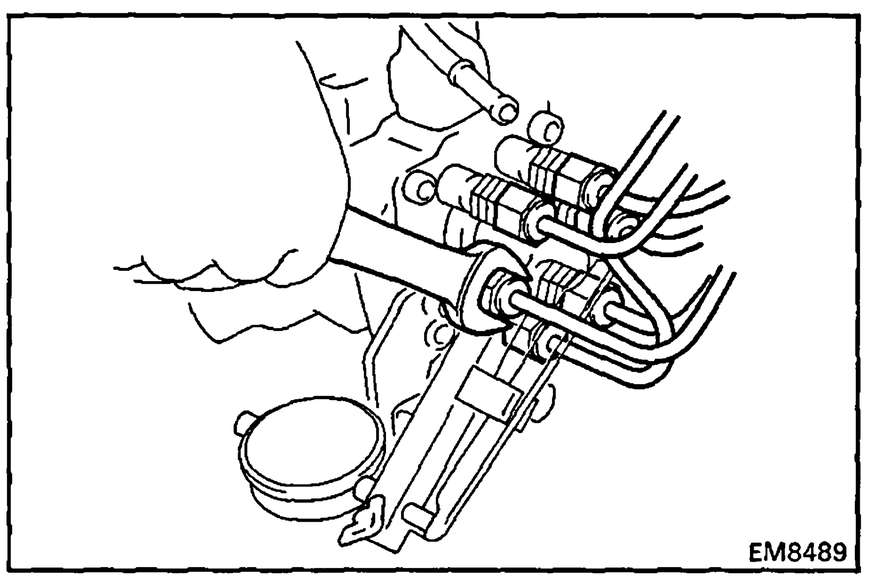

(f) Loosen the following nuts and bolt:

(1) (1PZ)
Five union nuts of injection pipes at injection pump side.

(2) (1HZ)
Six union nuts of injection pipes at injection pump side.

(3) (1HD-T)
Five remaining union nuts of injection pipes at injection pump side.

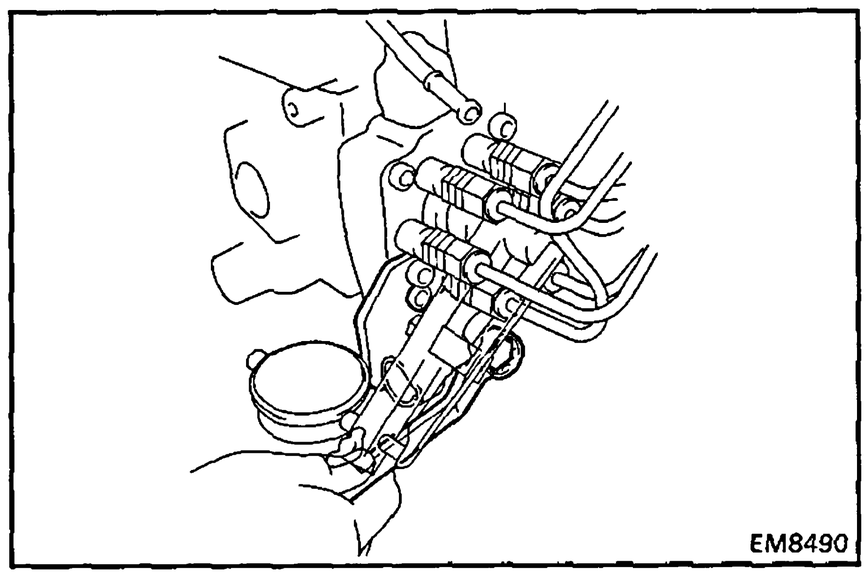

(4) Bolt holding injection pump to injection pump stay.

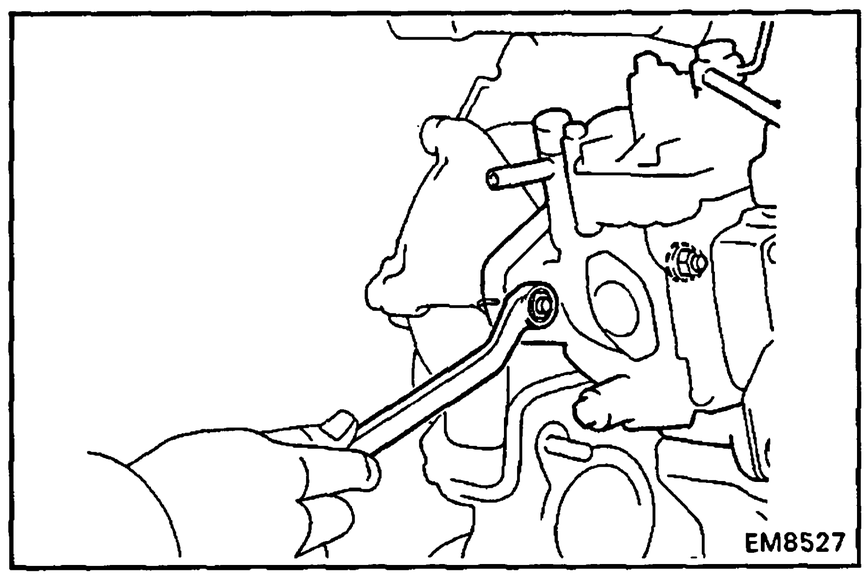

(5) Two nuts holding injection pump to timing gear case.

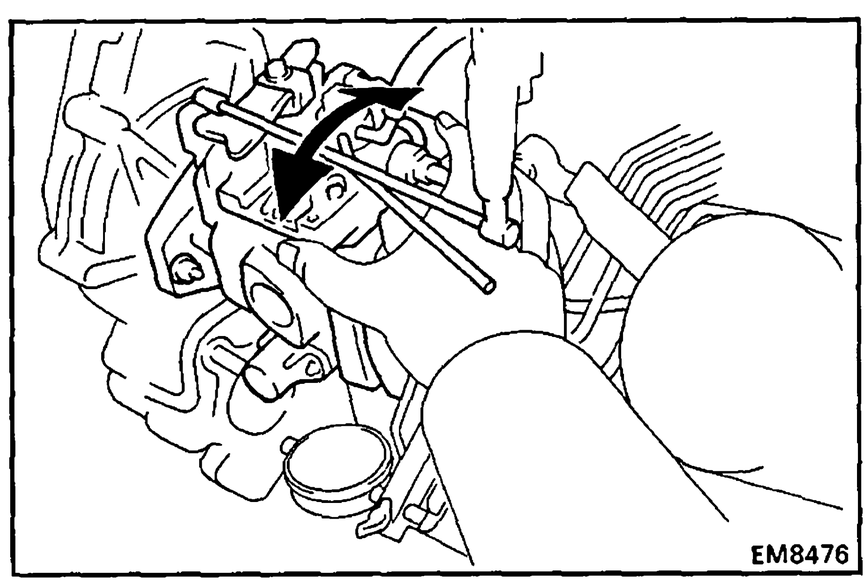

(g) Adjust plunger stroke by slightly tilting the injection pump body.

If the stroke is less than specification, tilt the pump toward the engine.

If the stroke is greater than specification, tilt the pump away from the engine.

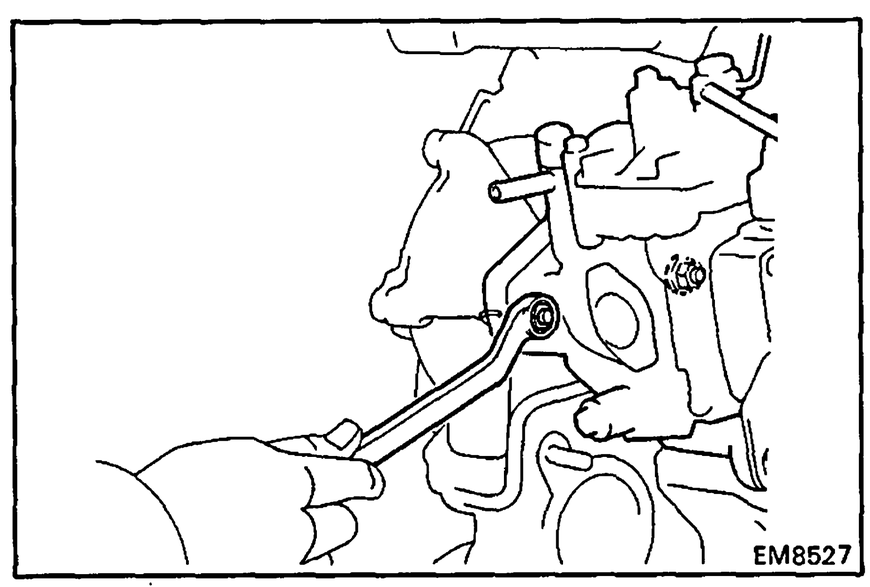

(h) Tighten the following nuts and bolt:

(1) Two nuts holding injection pump to timing gear case.

Torque: 185 kg-cm (13 ft-lb, 18 N·m)

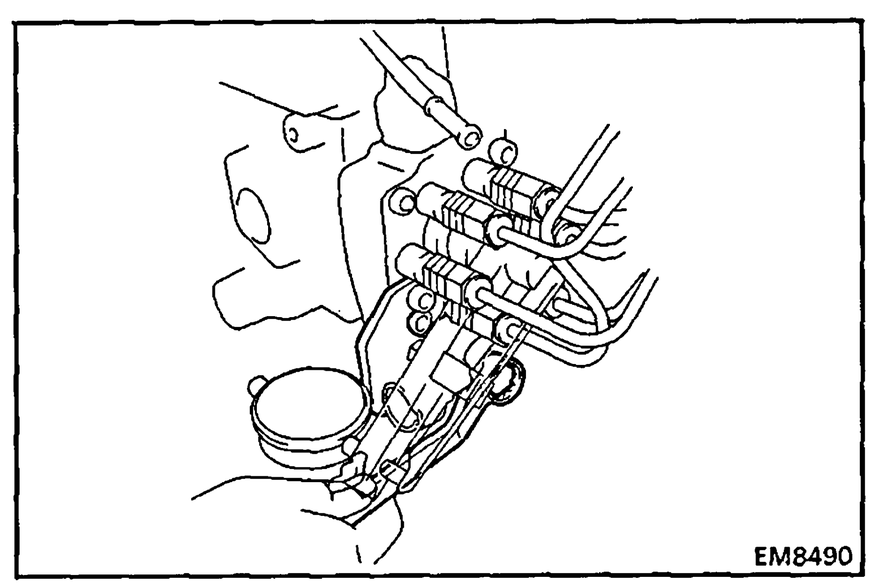

(2) Bolt holding injection pump to injection pump stay.

Torque: 700 kg-cm (51 ft-lb, 69 N·m)

- Recheck the plunger stroke.

8. (w/ ACSD)
REMOVE METAL PLATE

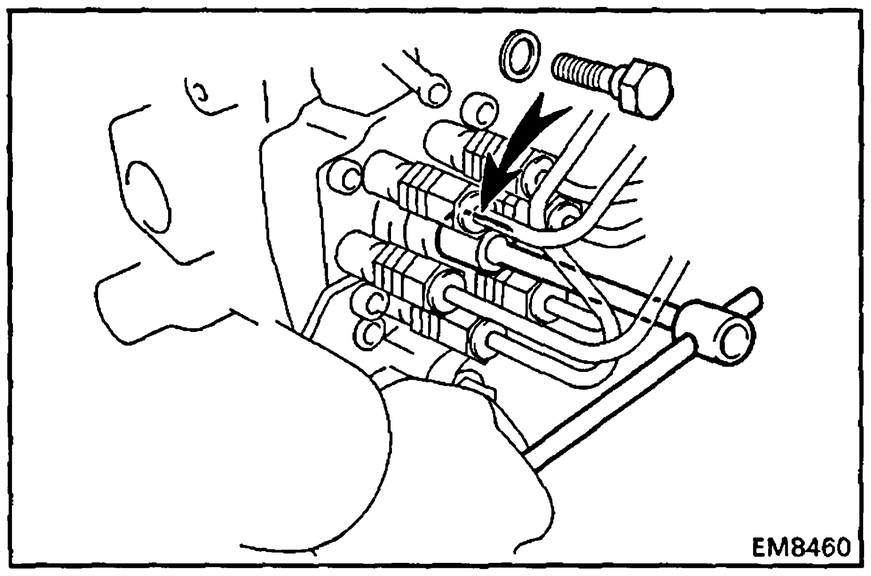

9. REMOVE SST AND DIAL INDICATOR

(a) Remove SST and the dial indicator.

SST 09275-54011

(b) Install a new gasket and the plug bolt of the distributive head plug.

Torque:

1PZ and 1HZ	**170 kg-cm (12 ft-lb, 17 N·m)**
1HD-T	**260 kg-cm (19 ft-lb, 25 N·m)**

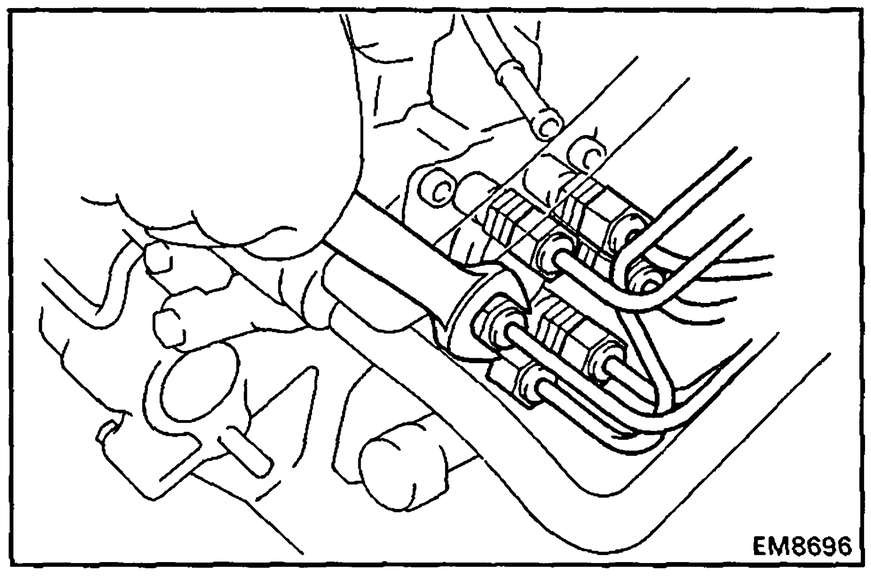

10. TORQUE UNION NUTS OF INJECTION PIPES

Torque:

1PZ and 1HZ	**150 kg-cm (11 ft-lb, 15 N·m)**
1HD-T	**250 kg-cm (18 ft-lb, 25 N·m)**

11. (1HD-T w/ BACS)
INSTALL AIR CONTROL VALVE (ACV)

12. INSTALL TIMING BELT COVER
(See step 9 on page EM-41)

13. START ENGINE AND CHECK FOR LEAKS

ADJUSTMENT OF IDLE SPEED AND MAXIMUM SPEED

1. INITIAL CONDITIONS

(a) Engine at reach normal operating temperature

(b) Air cleaner installed

(c) All accessories switched OFF

(d) All vacuum lines properly connected

(e) Valve clearance set correctly

(f) Injection timing set correctly

(g) Transmission in N range

2. CONNECT TACHOMETER

3. ADJUST IDLE SPEED

(a) Check that the adjusting lever touches the idle speed adjusting screw when the accelerator pedal is released.

If not, adjust the accelerator linkage.

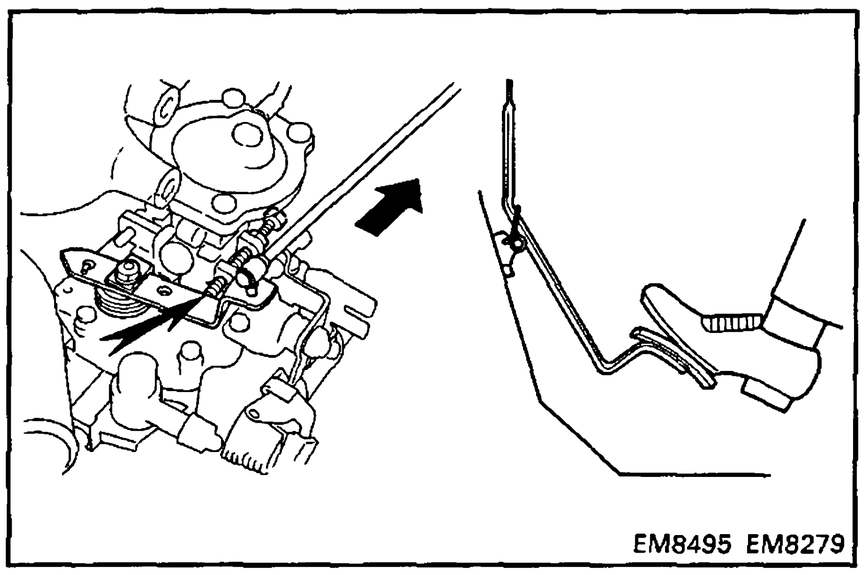

(b) Start the engine.

(c) Check the idle speed.

Idle speed:

1PZ	**600 – 700 rpm**
1HZ M/T	**600 – 700 rpm**
1HZ A/T	**660 – 760 rpm**
1HD-T M/T	**600 – 700 rpm**
1HD-T A/T	**750 – 850 rpm**

(d) Adjust the idle speed.

- Disconnect the accelerator linkage.
- Loosen the lock nut of the idle speed adjusting screw.
- Adjust the idle speed by turning the IDLE SPEED ADJUSTING SCREW.

Idle speed:

1PZ	**650 rpm**
1HZ M/T	**650 rpm**
1HZ A/T	**710 rpm**
1HD-T M/T	**650 rpm**
1HD-T A/T	**800 rpm**

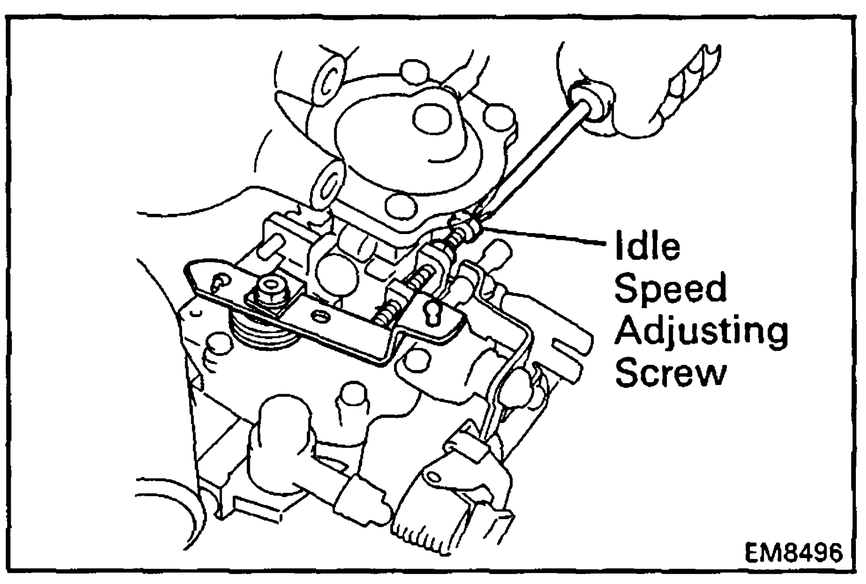

- Securely tighten the lock nut, and recheck the idle speed.
- Reconnect the accelerator linkage.
- After adjustment, adjust the accelerator linkage.

4. ADJUST MAXIMUM SPEED

(a) Check that the adjusting lever touches the maximum speed adjusting screw when the accelerator pedal is depressed all the way.

If not, adjust the accelerator linkage.

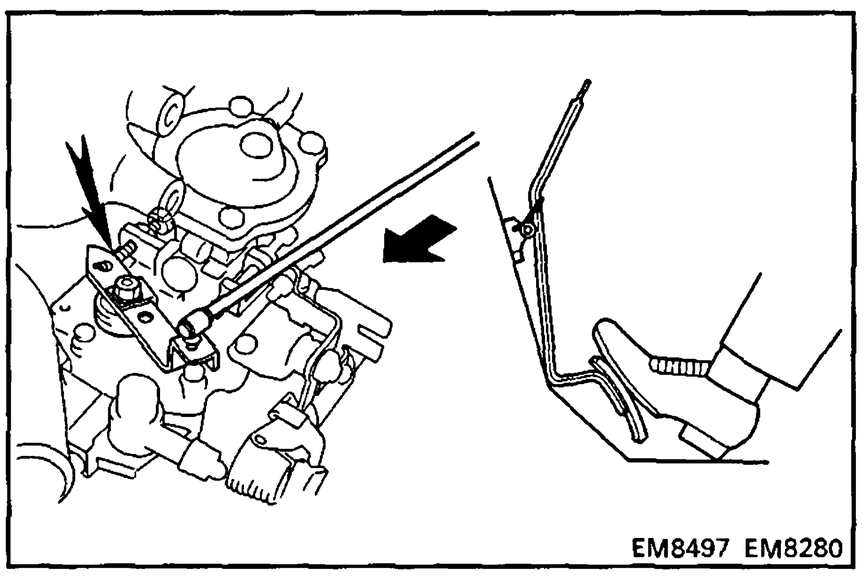

(b) Start the engine.

(c) Depress the accelerator pedal all the way.

(d) Check the maximum speed.

Maximum speed:

1PZ and 1HZ	**4,500 – 4,700 rpm**
1HD-T	**4,300 – 4,500 rpm**

(e) Adjust the maximum speed.

- Disconnect the accelerator linkage.
- Cut out the seal wire of the maximum speed adjusting screw.
- (w/ HAC and 1HD-T)
  Using SST, loosen the lock nut of the maximum speed adjusting screw.

SST 09275-54020

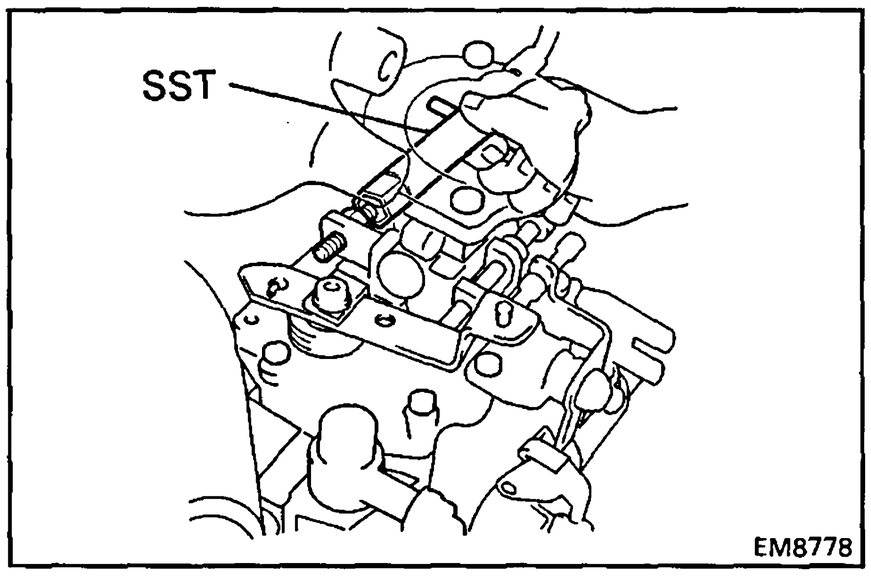

- (w/o HAC)
  Loosen the lock nut of the maximum speed adjusting screw.

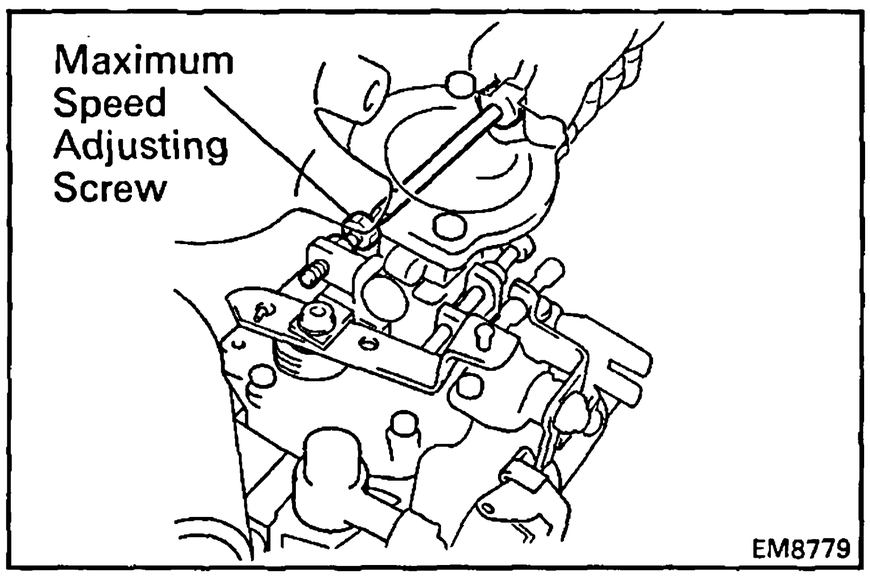

- Adjust the maximum speed by turning the MAXIMUM SPEED ADJUSTING SCREW.

Maximum speed:

1PZ and 1HZ	**4,600 rpm**
1HD-T	**4,400 rpm**

HINT: Adjust at idle speed. Then, raise engine speed and recheck the maximum speed.

- (w/ HAC and 1HD-T)
  Using SST, securely tighten the lock nut.

SST 09275-54020

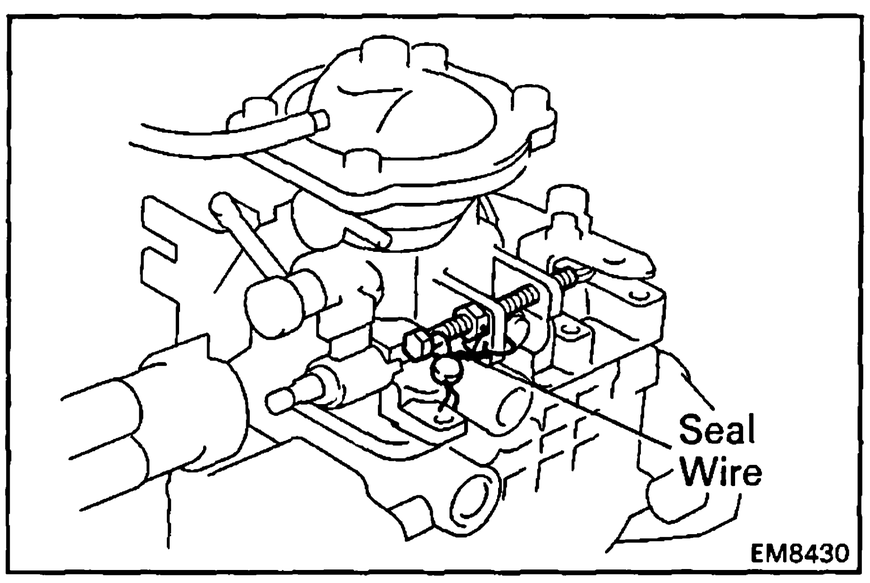

- (w/o HAC)
  Securely tighten the lock nut.
- Recheck the maximum speed.
- Reconnect the accelerator linkage.
- After adjustment, adjust the accelerator linkage.
- Seal the maximum speed adjusting screw with a new seal wire.

ADJUSTMENT OF AIR CONDITIONER IDLE-UP SETTING SPEED

1. INITIAL CONDITIONS

(a) Engine at reach normal operating temperature
(b) Air cleaner installed
(c) All vacuum lines properly connected
(d) Valve clearance set correctly
(e) Injection timing set correctly
(f) Transmission in N range
(g) Idle speed set correctly

2. CONNECT TACHOMETER

3. ADJUST AIR CONDITIONER IDLE-UP SETTING SPEED

(a) Start the engine.
(b) A/C switches ON.
(c) Disconnect the vacuum hose from the idle-up actuator.
(d) Apply vacuum to the idle-up actuator.
(e) Race the engine to 2,500 rpm for a few seconds, release the throttle and check the idle-up setting speed.

A/C idle-up setting speed: 950 rpm

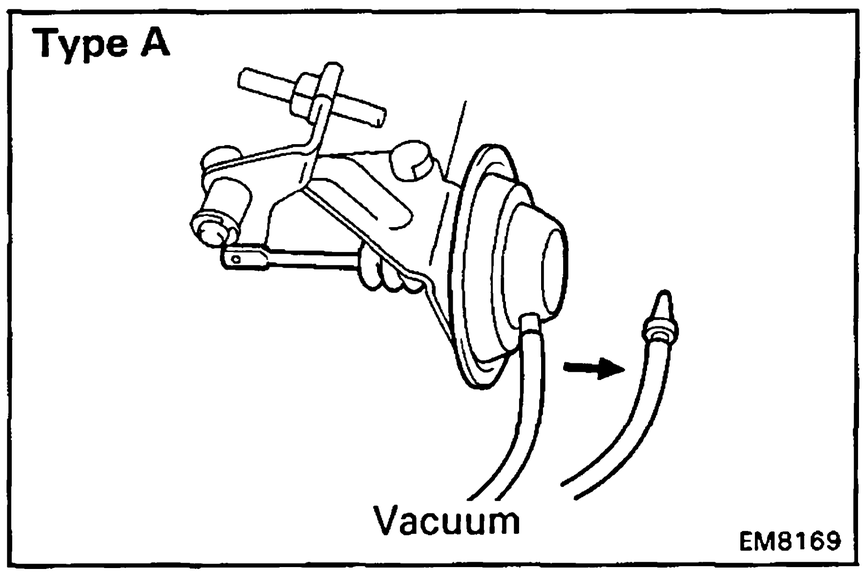

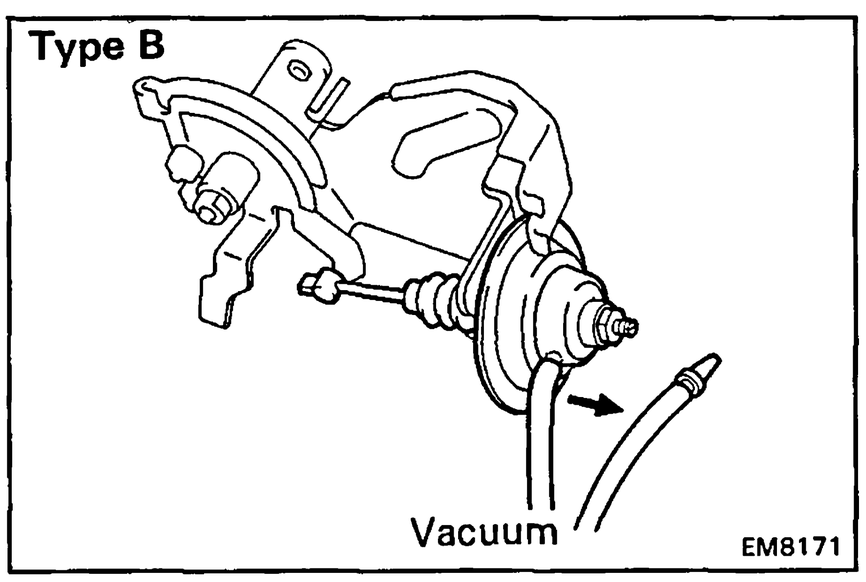

(f) Adjust the idle-up setting speed by turning the IDLE-UP SETTING SPEED ADJUSTING SCREW.
(g) Race the engine to 2,500 rpm for a few seconds, release the throttle and recheck the A/C idle-up setting speed.
(h) Reconnect the vacuum hose to the idle-up actuator.

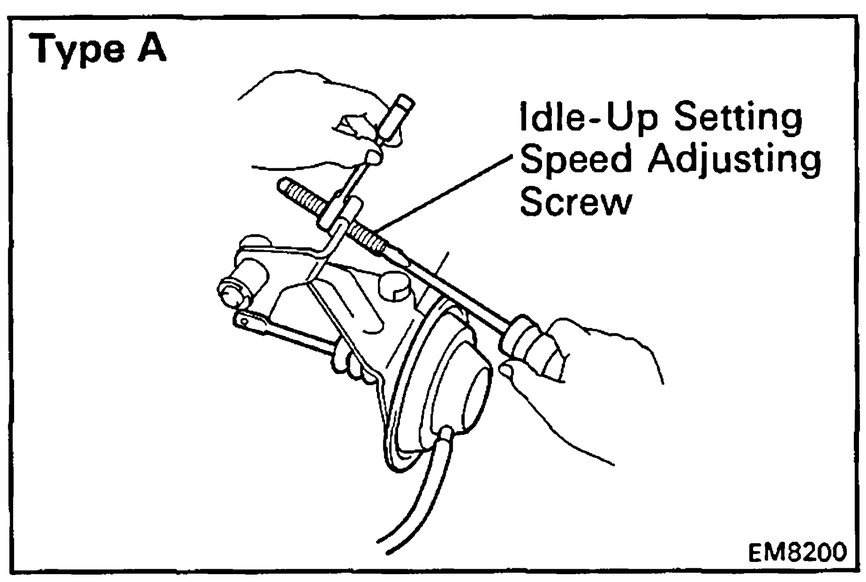

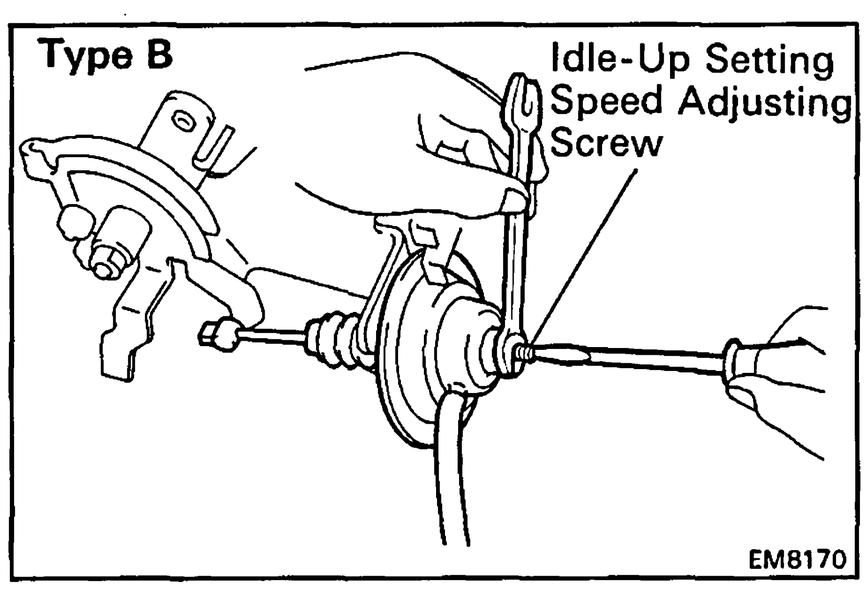

COMPRESSION CHECK

HINT: If there is lack of power, excessive oil consumption or poor fuel economy, measure the compression pressure.

1. **WARM UP AND STOP ENGINE**

   Allow the engine to reach normal operating temperature.

2. **DISCONNECT INJECTION PUMP (FUEL CUT SOLENOID) CONNECTOR**

3. **REMOVE GLOW PLUGS**
   (See step 9 on page EM-57)

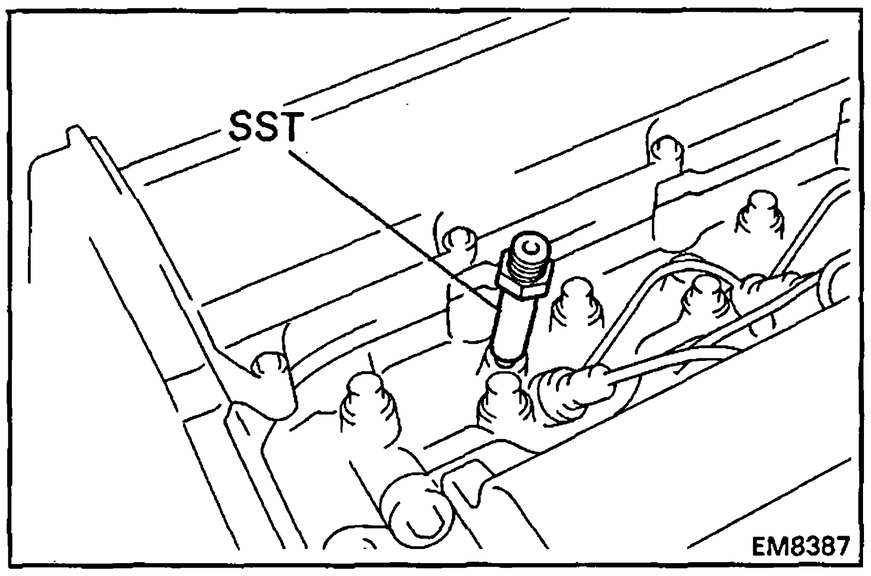

4. **CHECK CYLINDER COMPRESSION PRESSURE**

   (a) Install SST (attachment) to the glow plug hole.

   SST 09992-00024 (09992-00160)

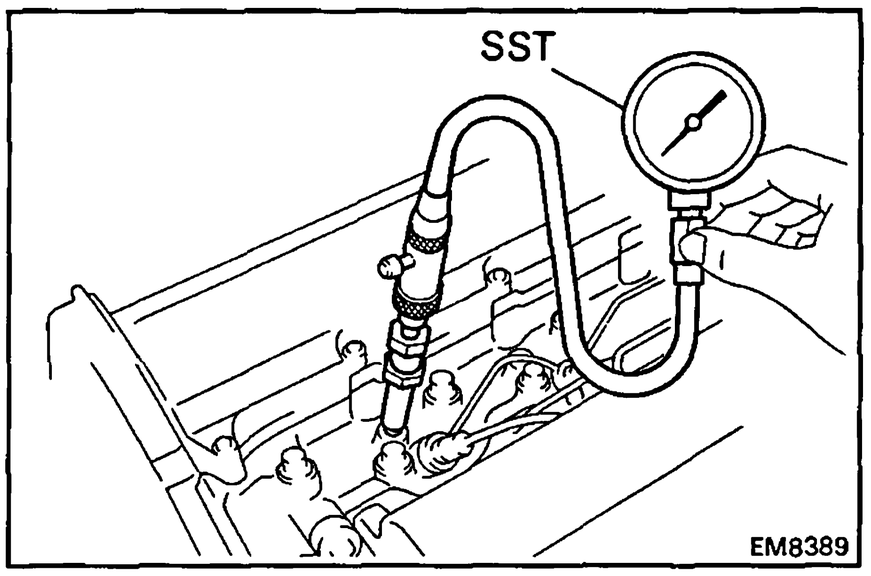

   (b) Connect SST (compression gauge) to SST (attachment).

   SST 09992-00024 (09992-00160, 09992-00211)

(c) Fully open the throttle valve.

(d) While cranking the engine, measure the compression pressure.

HINT: Always use a fully charged battery to obtain engine revolution of 250 rpm or more.

(e) Repeat steps (a) through (d) for each cylinder.

NOTICE: This measurement must be done in as short a time as possible.

Compression pressure:
1PZ and 1HZ
37.0 kg/cm^2 (526 psi, 3,628 kPa) or more
1HD-T
35.0 kg/cm^2 (498 psi, 3,432 kPa) or more

Minimum pressure:
1PZ and 1HZ
27.0 kg/cm^2 (384 psi, 2,648 kPa) or more
1HD-T
25.0 kg/cm^2 (356 psi, 2,452 kpa) or more
Difference between each cylinder:
5.0 kg/cm^2 (71 psi, 490 kPa) or less

(f) If the cylinder compression in one or more cylinders is low, pour a small amount of engine oil into the cylinder through the glow plug hole and repeat steps (a) through (d) for the cylinder with low compression.

- If adding oil helps the compression chances are that the piston rings and/or cylinder bore are worn or damaged.
- If pressure stays low, a valve may be sticking or seating improperly, or there may be leakage past the gasket.

5. REINSTALL GLOW PLUGS
(See step 11 on page EM-81)

6. RECONNECT INJECTION PUMP (FUEL CUT SOLENOID) CONNECTOR

TIMING BELT

HINT: If replacing the timing belt before the timing belt warning light comes on, (light comes on after 100,000 km of driving), be sure to reset the timing belt counter of the speedometer to zero.

COMPONENTS

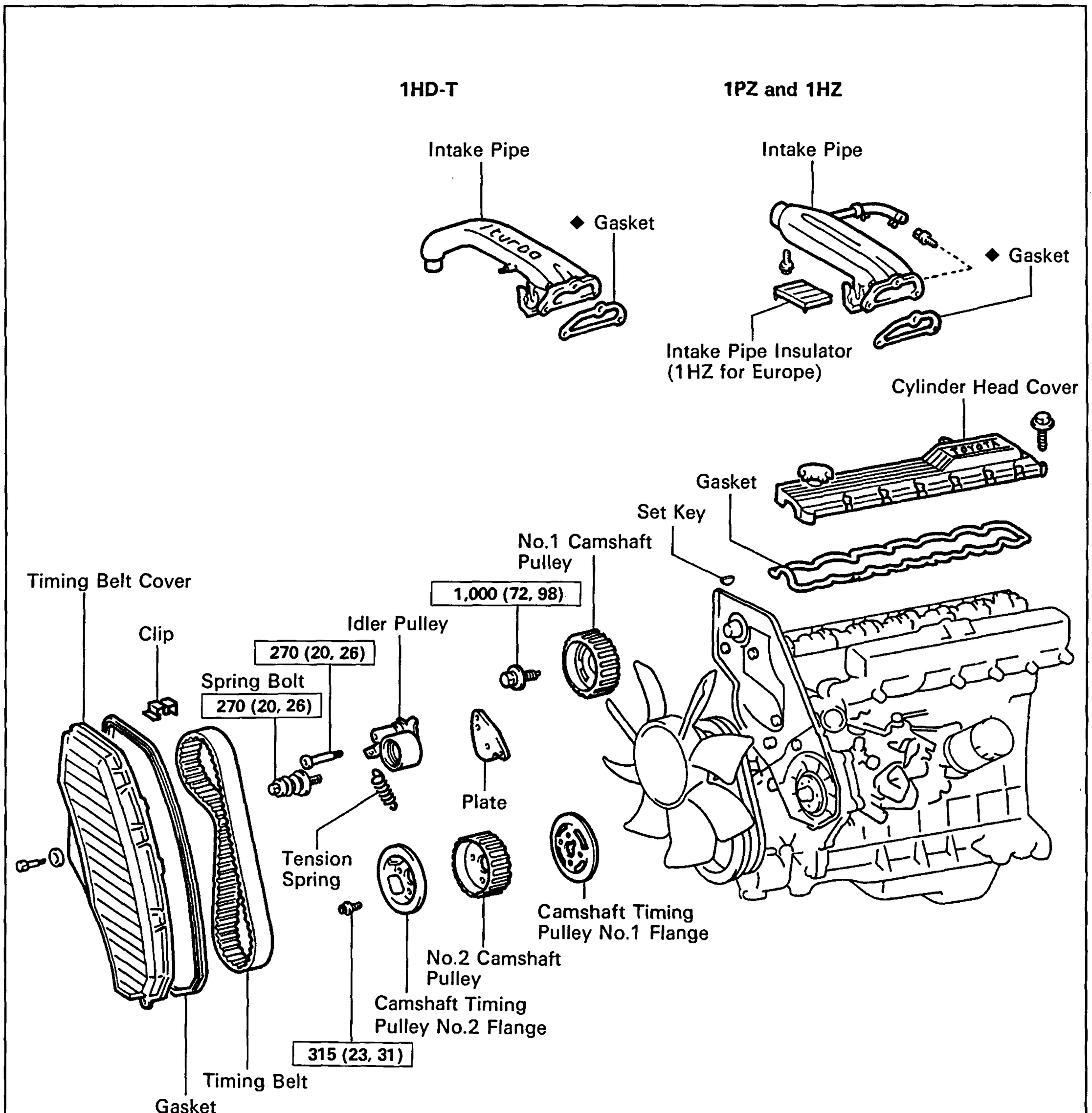

kg-cm (ft-lb, N·m) : Specified torque

◆ Non-reusable part

EM8780

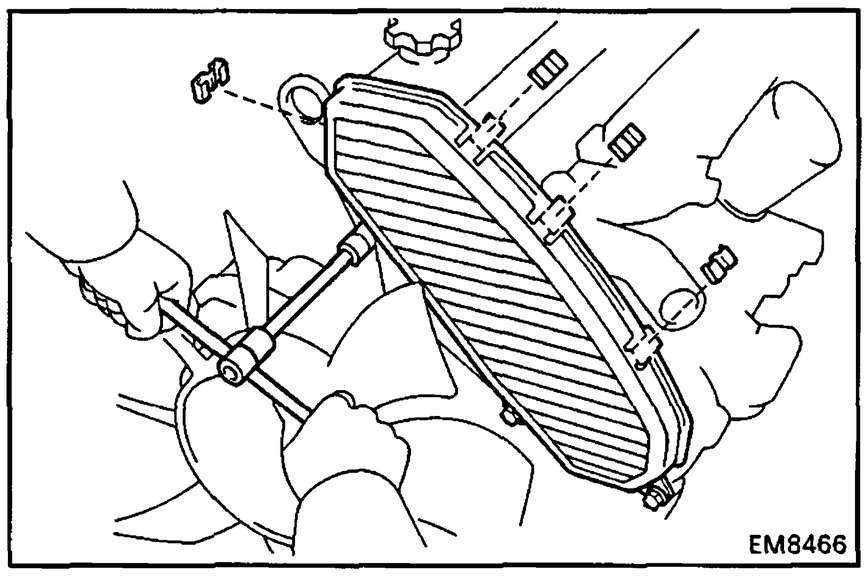

REMOVAL OF TIMING BELT

(See page EM-32)

1. REMOVE TIMING BELT COVER

Remove the three seal washer, bolts, four clips, timing belt cover and gasket.

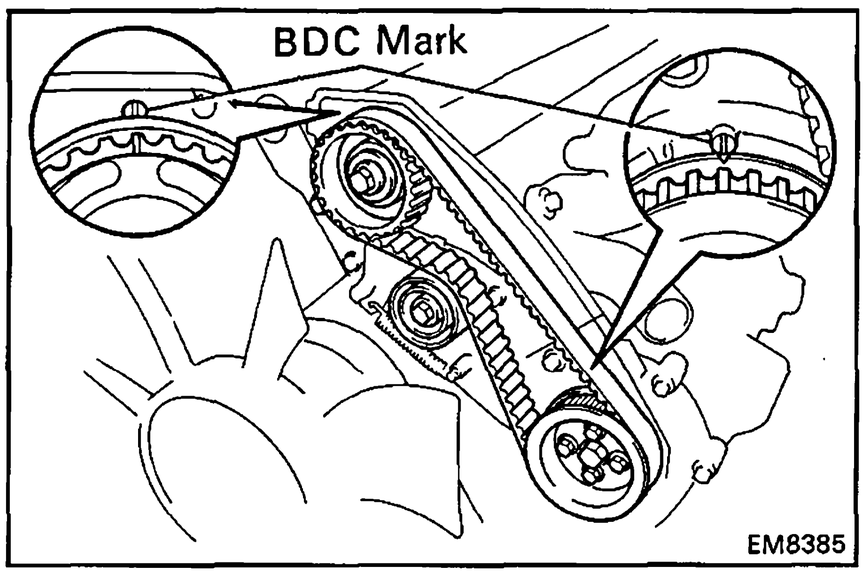

2. SET NO.1 CYLINDER TO BDC

Turn the crankshaft pulley clockwise, set the No.1 and No.2 camshaft pulley grooves at each position (BDC mark).

HINT: By positioning the No.1 cylinder at BDC, interference between the valve and piston is avoided, even if the camshaft rotates.

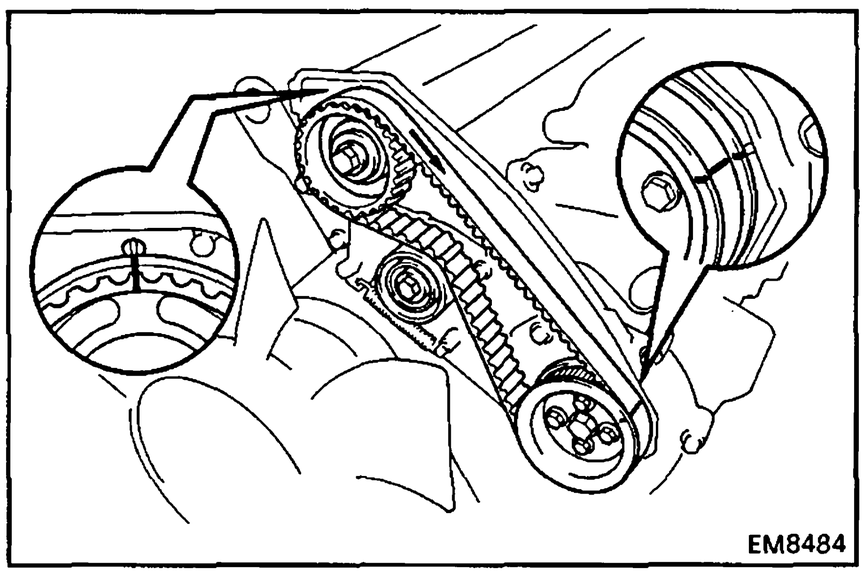

3. REMOVE TIMING BELT

HINT: If re-using the timing belt, draw a direction arrow on the timing belt (in direction of engine revolution), and place matchmarks on the pulleys and timing belt.

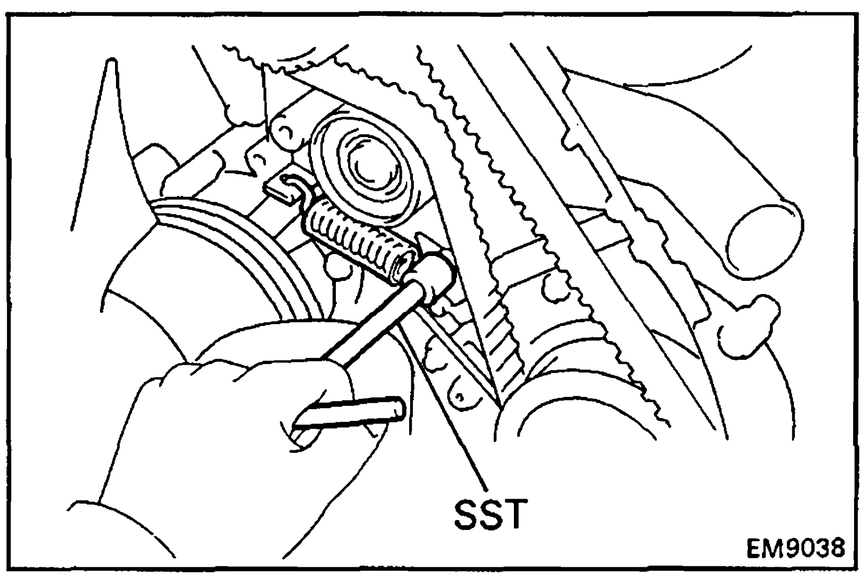

(a) Using SST, remove the tension spring.

SST 09717 – 20010

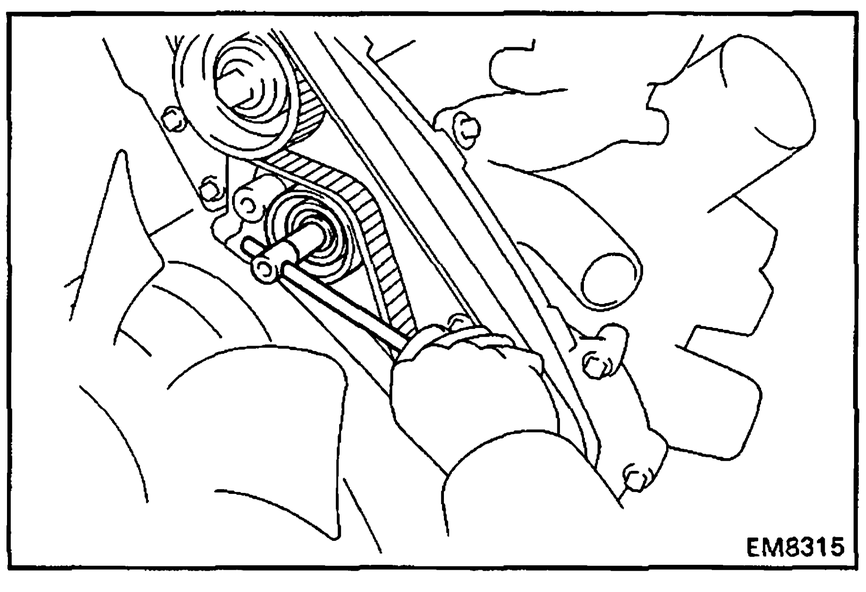

(b) Remove the spring bolt of the timing belt idler.

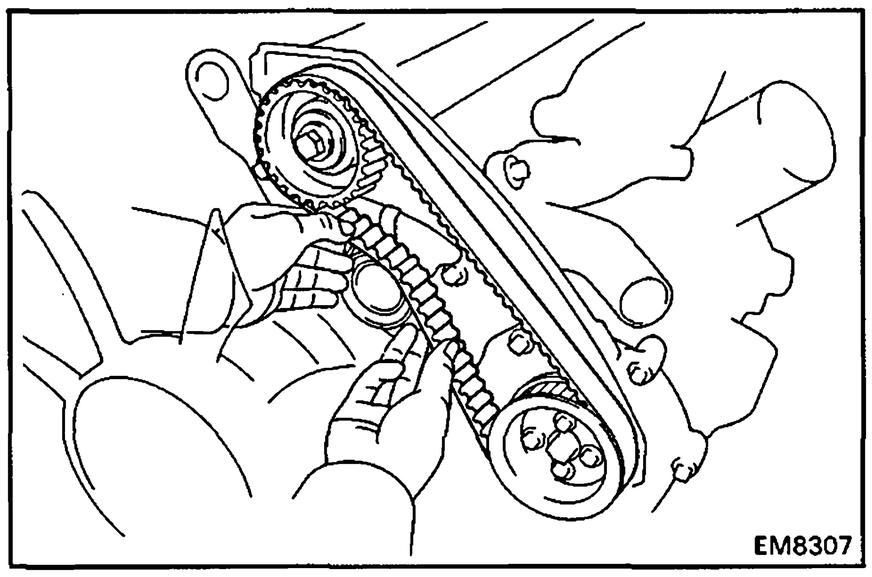

(c) Remove the timing belt.

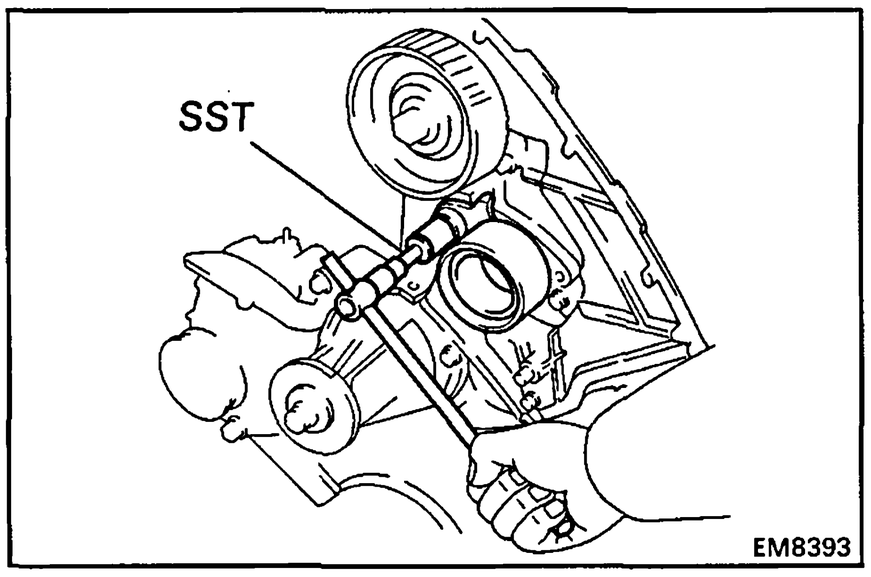

4. REMOVE TIMING BELT IDLER PULLEY

Using SST, remove the bolt, timing belt idler pulley and plate.

SST 09923-00020

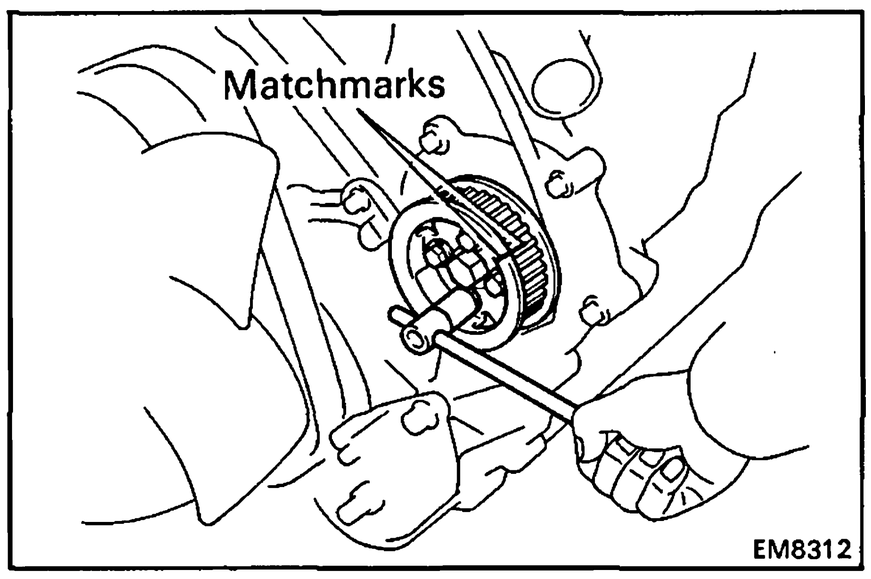

5. REMOVE NO.2 CAMSHAFT TIMING PULLEY

(a) Place matchmarks on the camshaft timing pulley No.2 flange and No.2 camshaft timing pulley.

(b) Remove the four bolts, camshaft timing pulley No.2 flange, No.2 camshaft timing pulley and camshaft timing pulley No.1 flange.

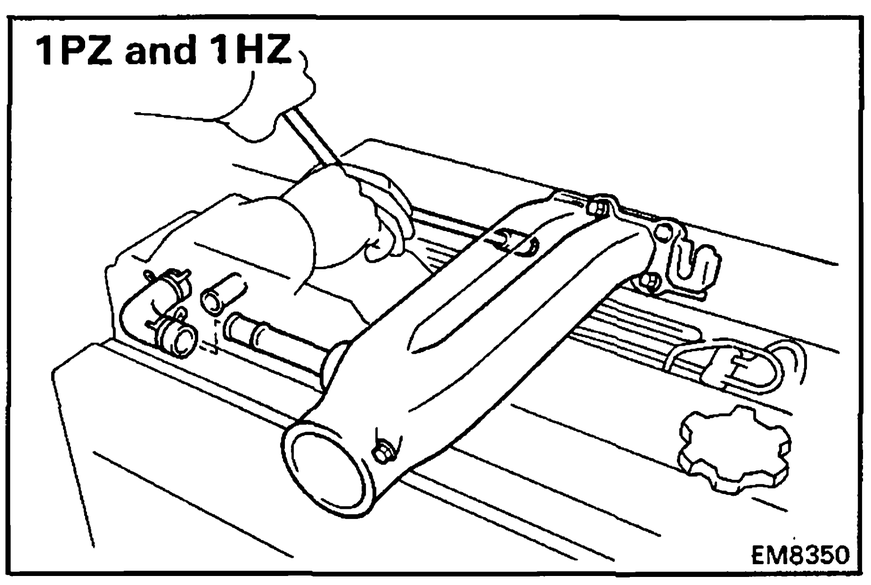

6. REMOVE INTAKE PIPE (1PZ and 1HZ)

(a) Disconnect the PCV hose.

(b) Remove the four bolts, intake pipe and gasket.

(c) (1HZ (Eourope))
Remove the intake pipe insulator.

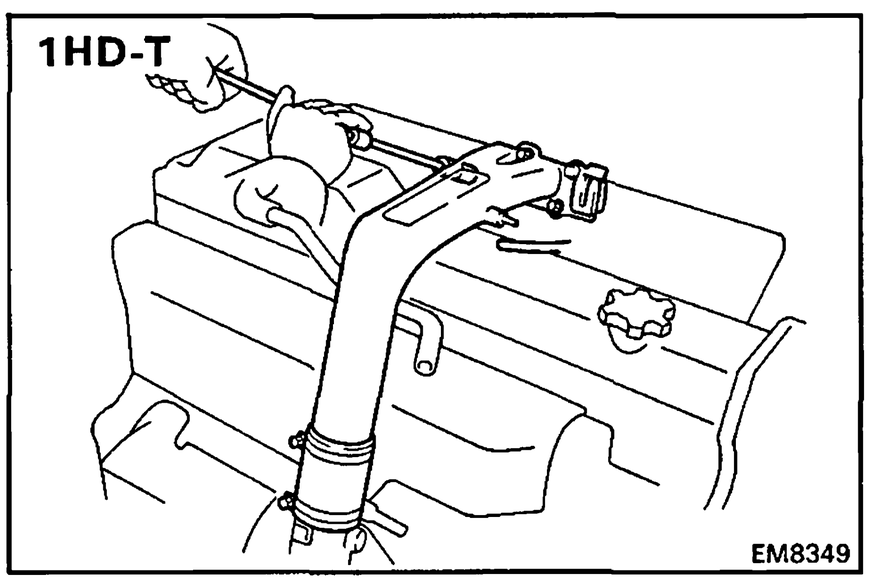

(1HD-T)

(a) Disconnect the turbo vacuum hose.

(b) Loosen the air hose clamp bolt.

(c) Remove the three bolts, intake pipe and gasket.

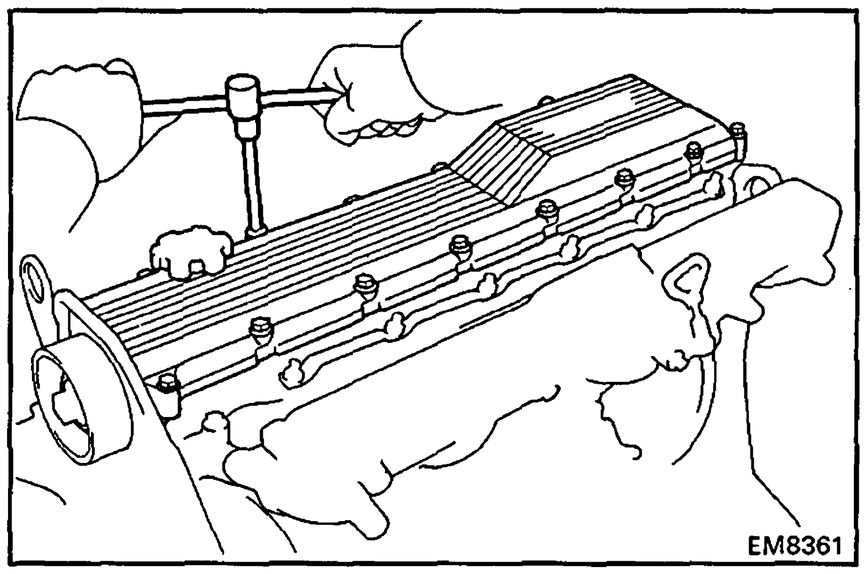

7. REMOVE CYLINDER HEAD COVER

Remove the twelve bolts (1PZ) or fourteen bolts (1HZ and 1HD-T), two nuts, cylinder head cover and gasket.

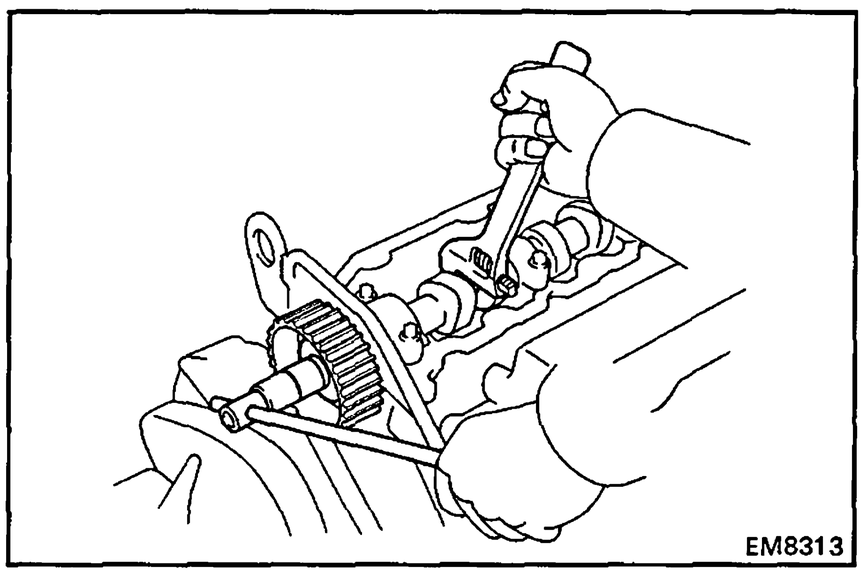

8. REMOVE NO.1 CAMSHAFT TIMING PULLEY

(a) Hold the hexagonal wrench head portion of the camshaft with a wrench, and remove the No.1 camshaft timing pulley bolt.

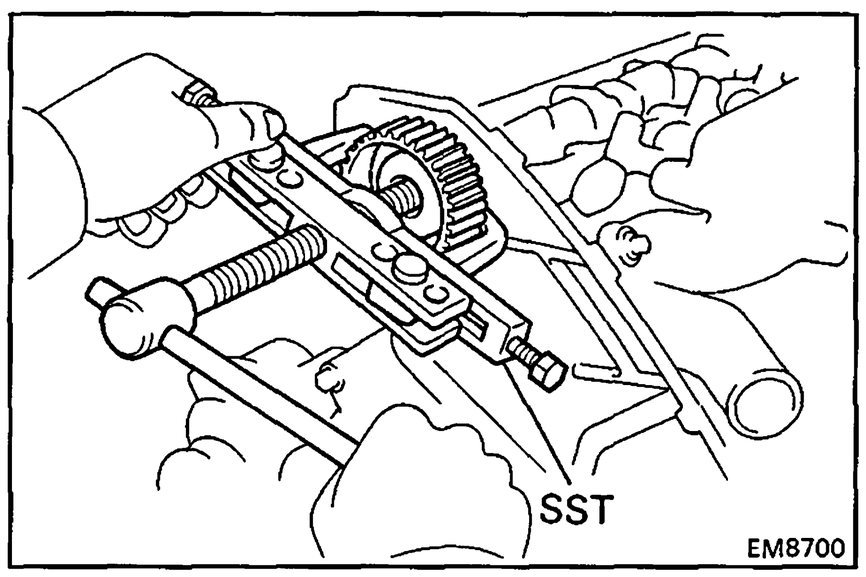

(b) Using SST, remove the No.1 camshaft timing pulley.

SST 09950-20017

(c) Remove the set key.

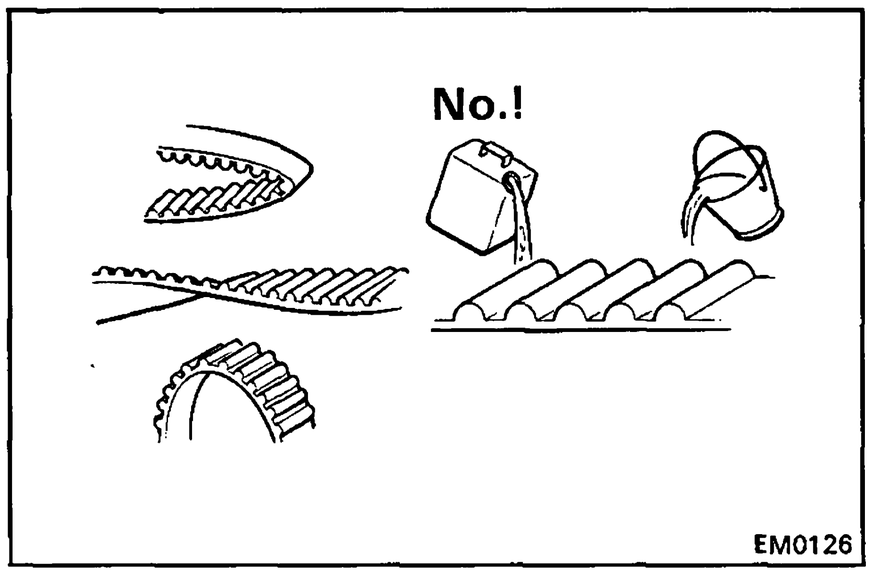

INSPECTION OF TIMING BELT COMPONENTS

1. INSPECT TIMING BELT

NOTICE:

- **Do not bend, twist or turn the timing belt inside out.**
- **Do not allow the timing belt to come into contact with oil, water or steam.**
- **Do not utilize timing belt tension when installing or removing the mount bolt of the camshaft timing pulley.**

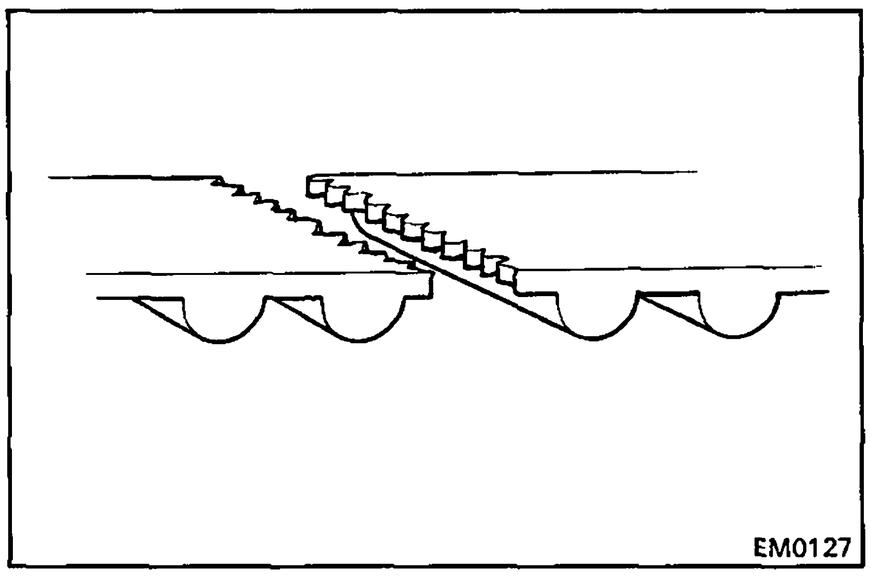

If there are any defects as shown in the illustration, check the following points:

(a) Premature parting

- Check for proper installation.
- Check the timing belt cover gasket for damage and, check for proper installation.

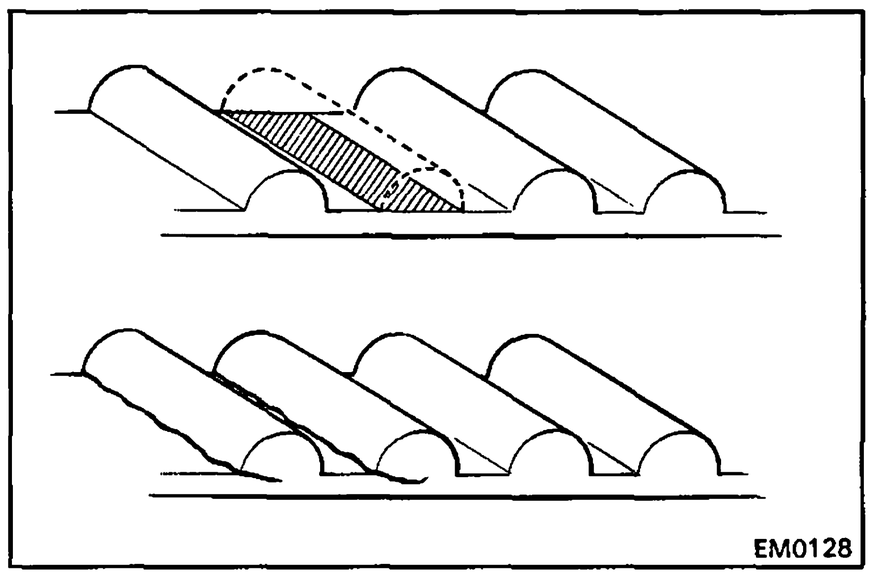

(b) If the belt teeth are cracked or damaged, check to see if the camshaft is locked.

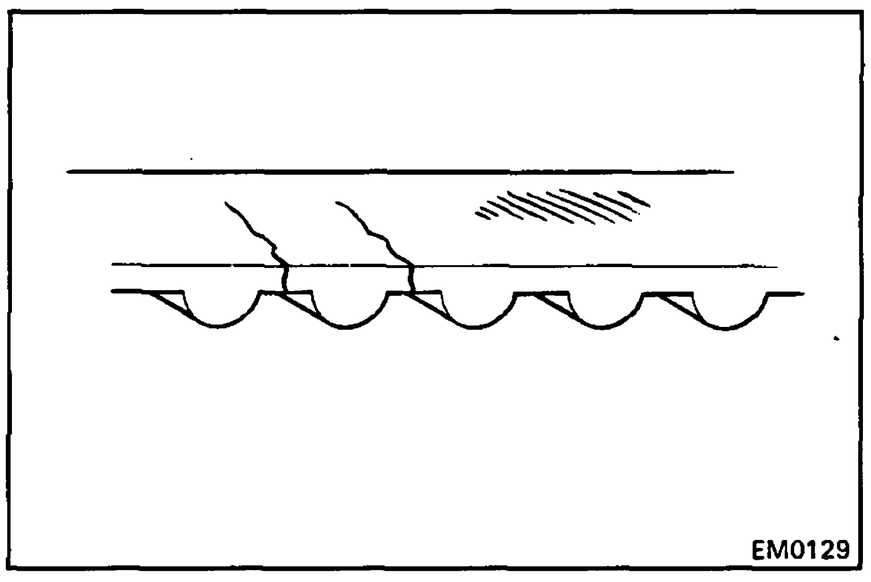

(c) If there are cracks or noticeable wear on the belt face, check to see if there are nicks on one side of the idler pulley lock.

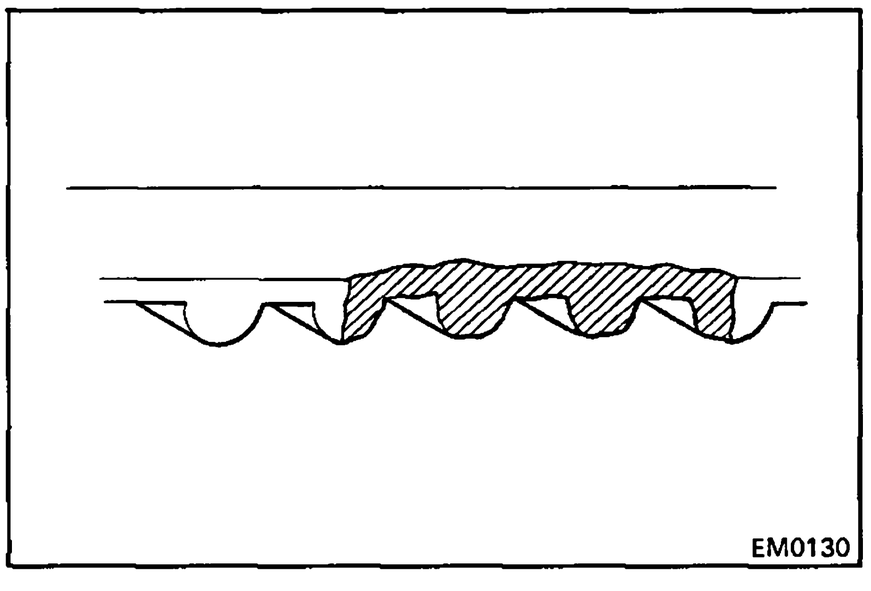

(d) If there is wear or damage on only one side of the belt, check the alignment of the each pulley.

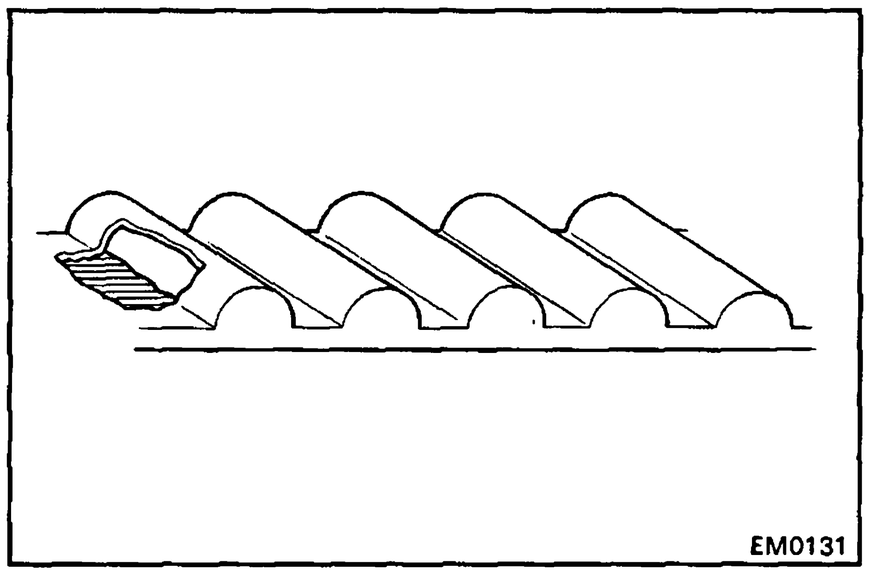

(e) If there is noticeable wear on the belt teeth, check timing belt cover for damage and check for correct gasket installation. Check for foreign material on the pulley teeth.

If necessary, replace the timing belt.

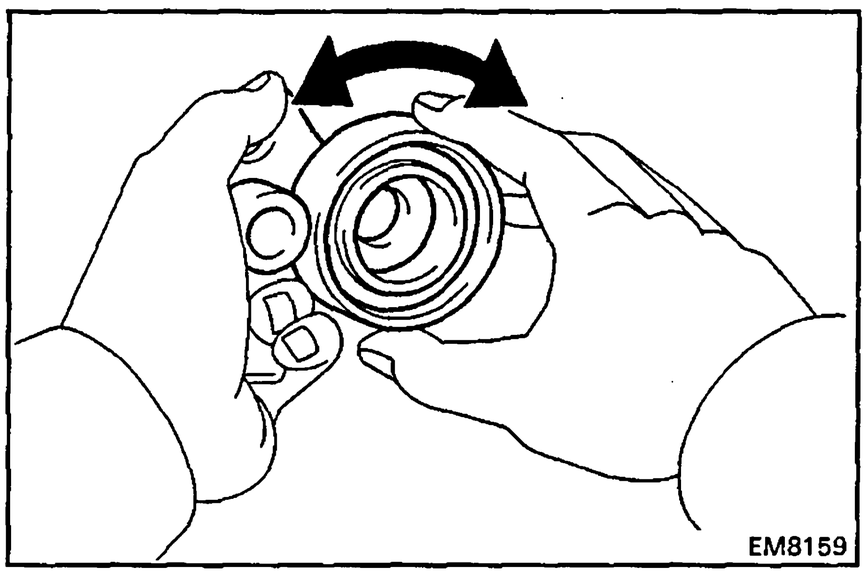

2. INSPECT IDLER PULLEY

(a) Check the turning smoothness of the idler pulley.

If necessary, replace the idler pulley.

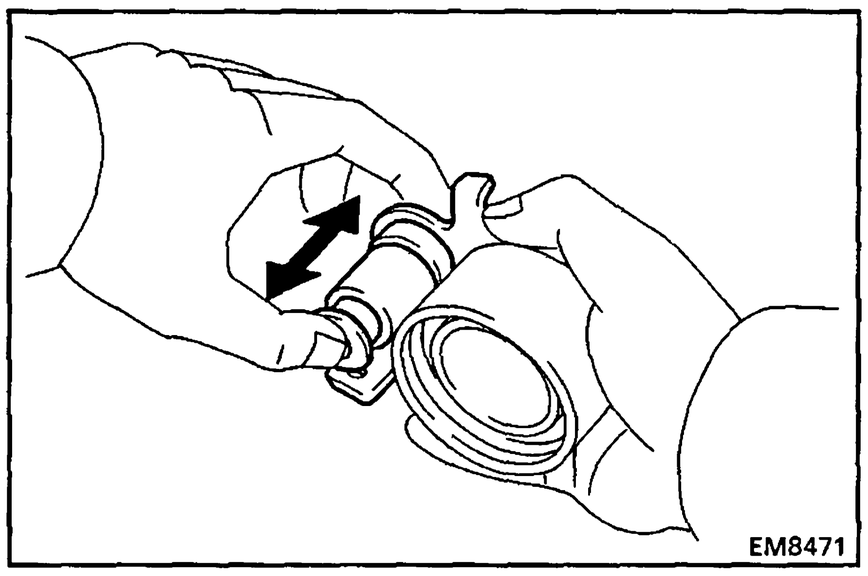

(b) Check that the idler pulley and the pulley bolt slide smoothly.

If necessary, replace the idler pulley.

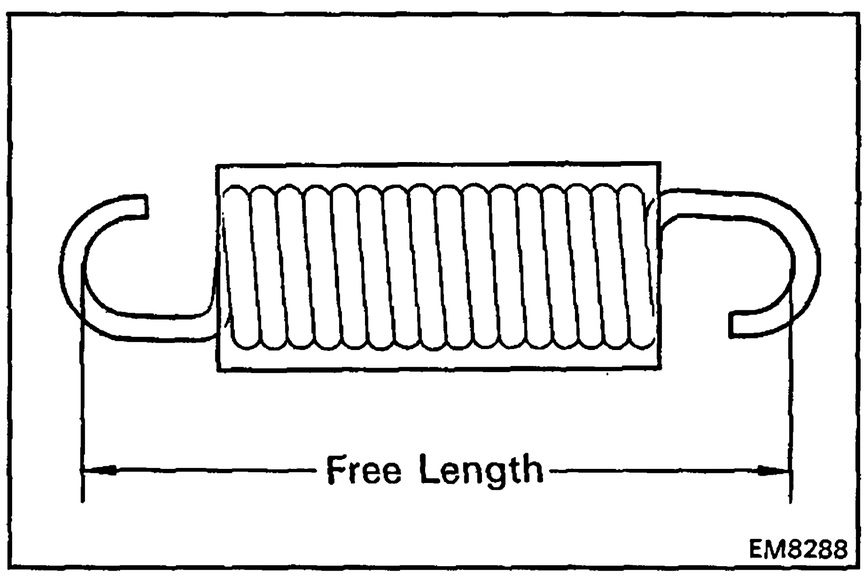

3. INSPECT TENSION SPRING

(a) Measure the free length of the tension spring.

Free length: 72.7 mm (2.862 in.)

If the free length is not as specified, replace the tension spring.

(b) Measure the tension of the tension spring at the specified installed length.

Installed tension:
23–28 kg (50.7–61.7 lb, 225–275 N·m)
at 90.1 mm (3.547 in.)

If the installed tension is not as specified, replace the tension spring.

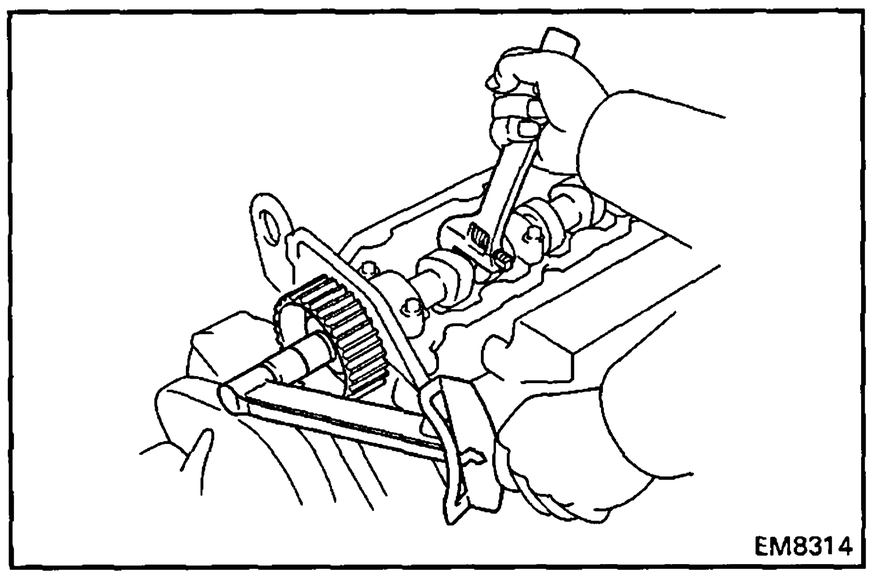

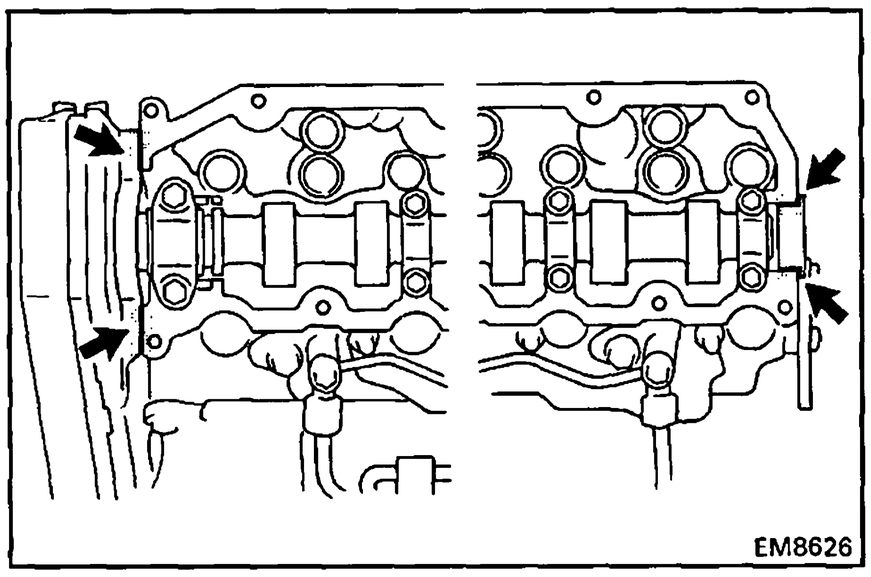

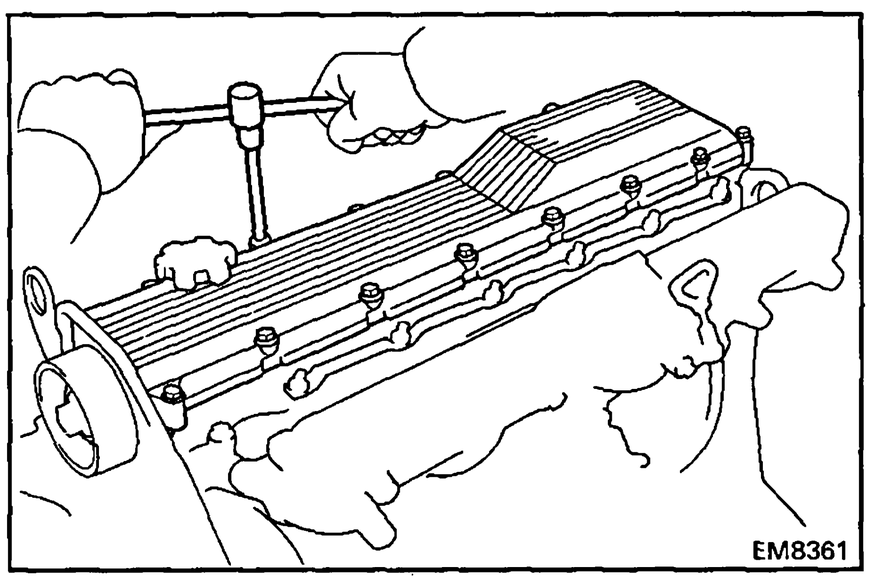

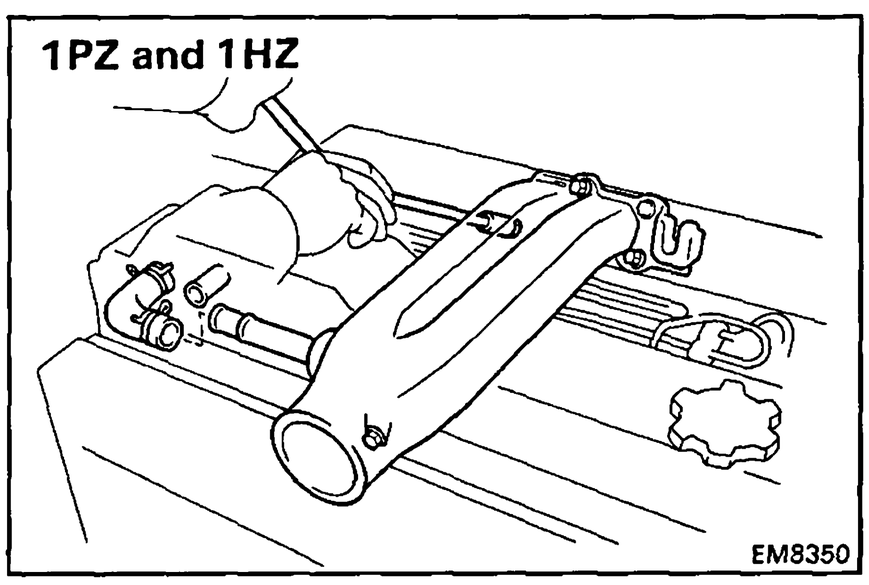

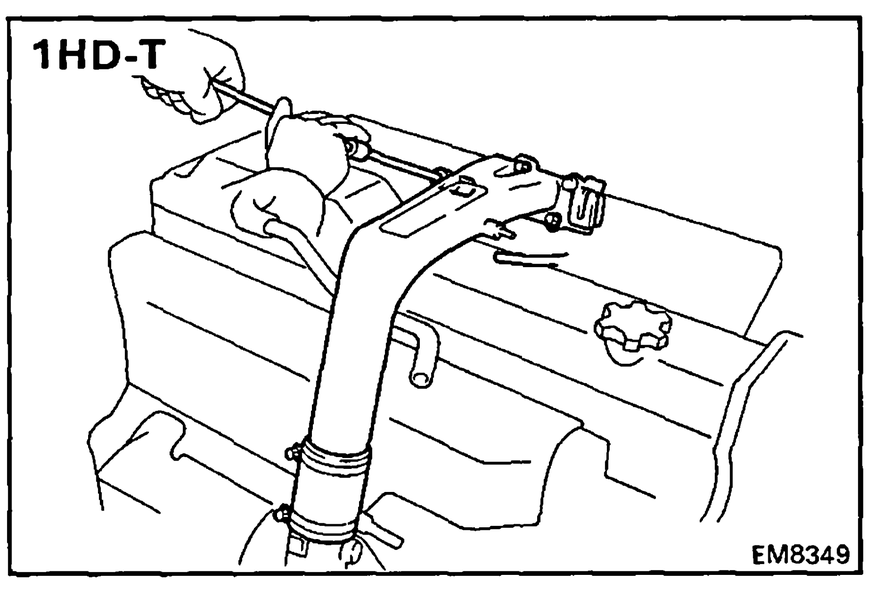

INSTALLATION OF TIMING BELT

(See page EM-32)

1. INSTALL NO.1 CAMSHAFT TIMING PULLEY

(a) Install the set key to the key groove of the camshaft.

(b) Align the pulley set key with the key groove of the No.1 camshaft timing pulley, slide the No.1 camshaft timing pulley.

(c) Temporarily install the No.1 timing pulley bolt.

(d) Hold the hexagonal wrench head portion of the camshaft with a wrench, and tighten the No.1 camshaft timing bolt.

Torque: 1,000 kg-cm (72 ft-lb, 98 N·m)

2. INSTALL CYLINDER HEAD COVER

(a) Rmove any old packing (FIPG) material.

(b) Apply seal packing to the cylinder head as shown in the illustration.

Seal packing: Part No.08826-00080 or equivalent

(c) Install the gasket to the cylinder head cover.

(d) Install the cylinder head cover with the twelve bolts (1PZ) or fourteen bolts (1HZ and 1HD-T) and two nuts.

3. INSTALL INTAKE PIPE (1PZ and 1HZ)

(a) (1HZ (Eourope))
Place the intake pipe insulator on the cylinder head cover.

(b) Install a new gasket and intake pipe with the four bolts.

(c) Connect the PCV hose.

(1HD-T)

(a) Install a new gasket and intake pipe with the three bolts.

(b) Connect the air hose and tighten the hose clamp.

(c) Connect the turbo vacuum hose.

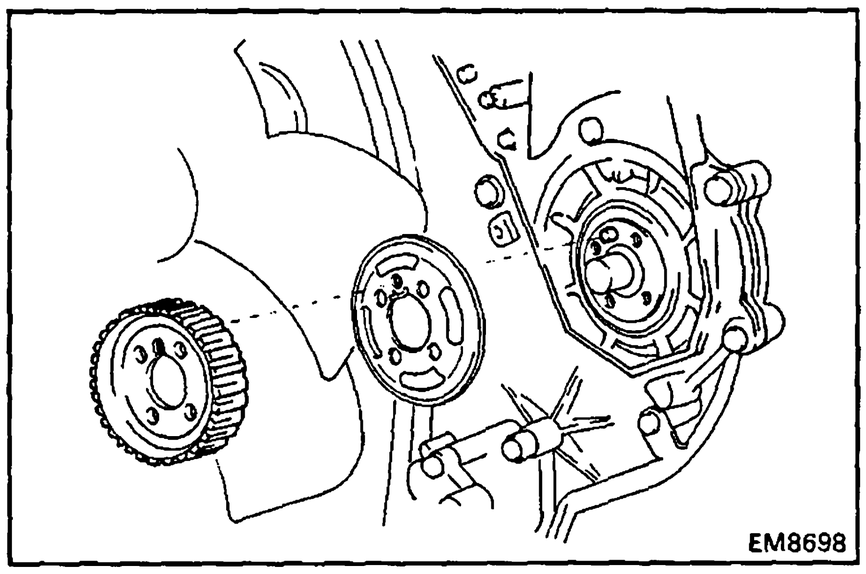

4. INSTALL NO.2 CAMSHAFT TIMING PULLEY

(a) Align the knock pin of the injection pump drive gear with the knock pin hole of the camshaft timing pulley No.1 flange and cutout portion of the No.2 camshaft timing pulley.

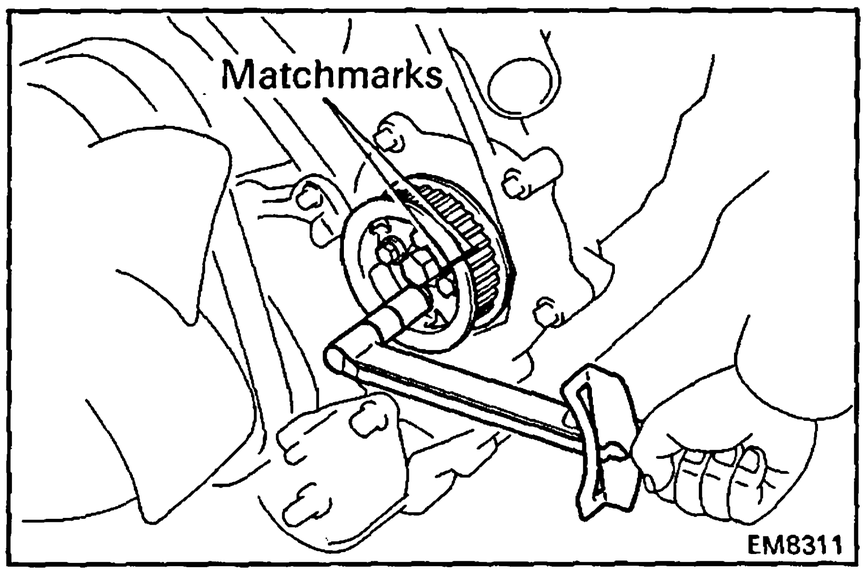

(b) Align the matchmarks of the No.2 camshaft timing pulley and camshaft timing pulley No.2 flange, and install and tighten the four bolts.

Torque: 315 kg-cm (23 ft-lb, 31 N·m)

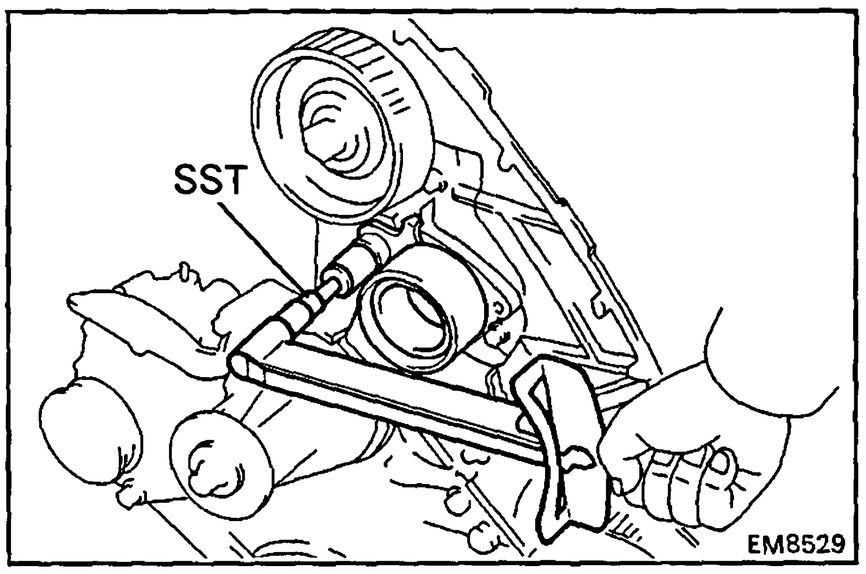

5. INSTALL TIMING BELT IDLER PULLEY

Using SST, install the plate and timing belt idler pulley with the bolt.

SST 09923-00020

Torque: 270 kg-cm (20 ft-lb, 26 N·m)

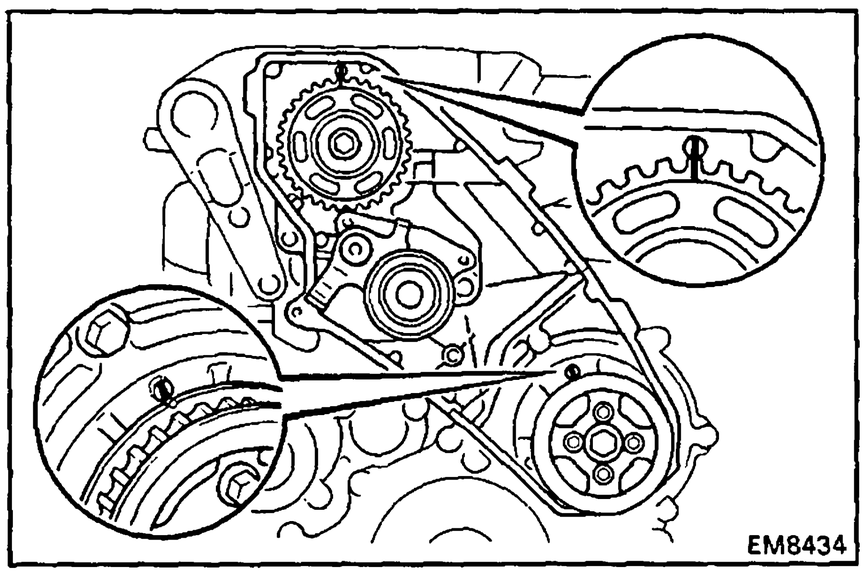

6. SET NO.1 CYLINDER TO BDC

Set the timing pulleys at each position.

NOTICE: When turning the crankshaft, the valve heads will hit against the piston top. So do not turn it more than necessary.

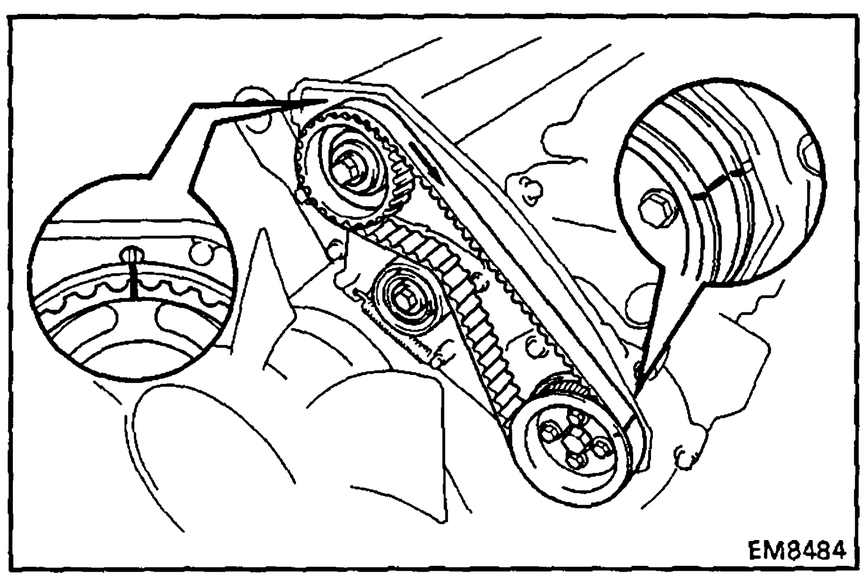

7. INSTALL TIMING BELT

NOTICE: The engine should be cold.

HINT: If re-using the timing belt, align the points marked during removal, and install the timing belt with the arrow pointing in the direction of engine revolution.

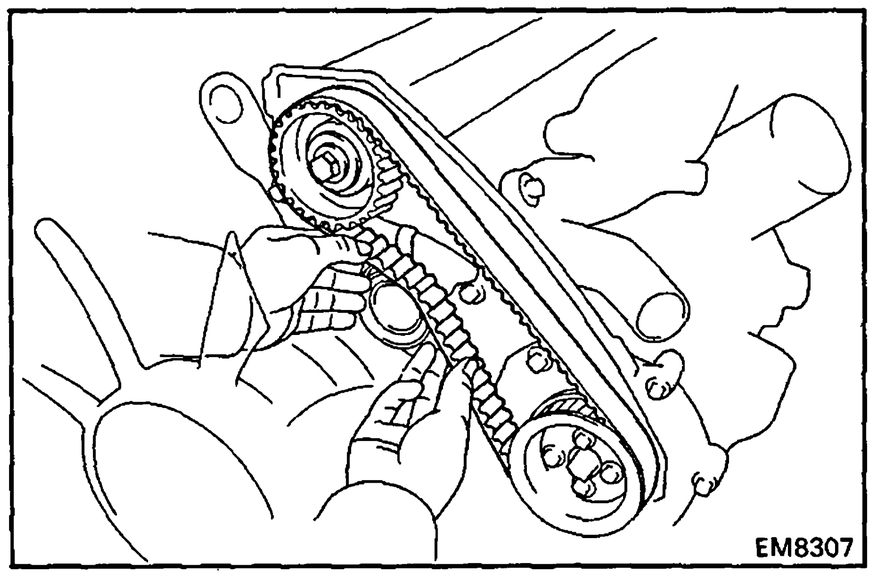

(a) Remove any oil or water on each pulley, and keep them clean.

(b) Install the timing belt in following order:

(1) No.2 camshaft timing pulley

(2) No.1 camshaft timing pulley

(3) Timing belt idler pulley

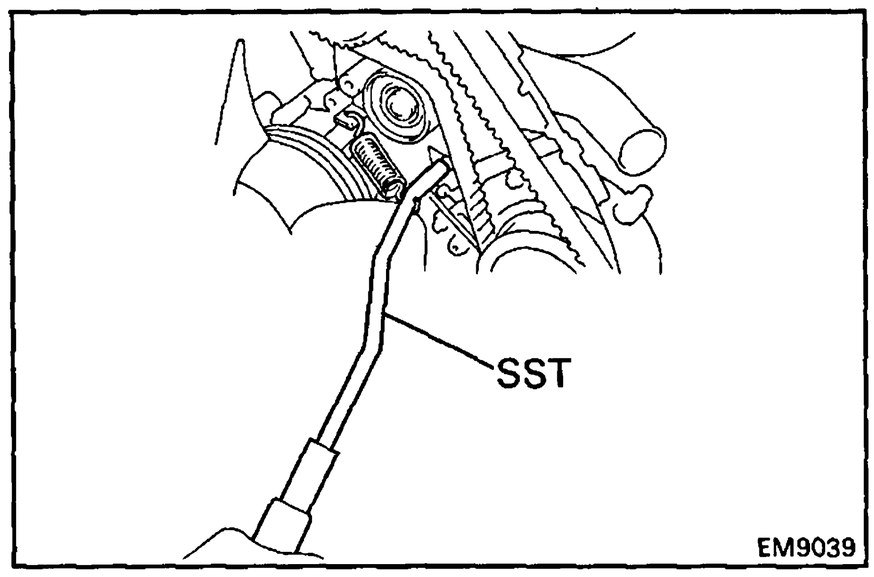

(c) Using SST, install the tension spring.

SST 09718-20010

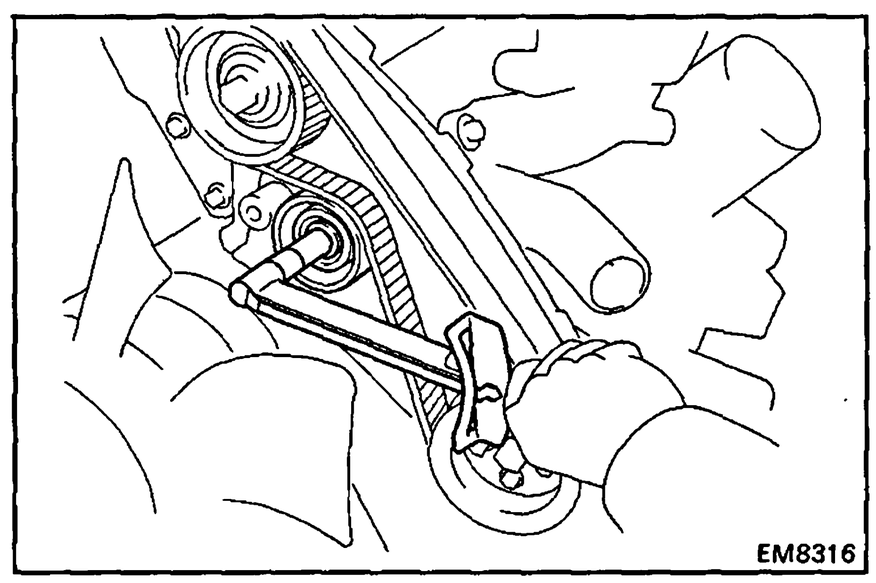

(d) Install and torque the spring bolt of the timing belt idler.

Torque: 270 kg-cm (20 ft-lb, 26 N·m)

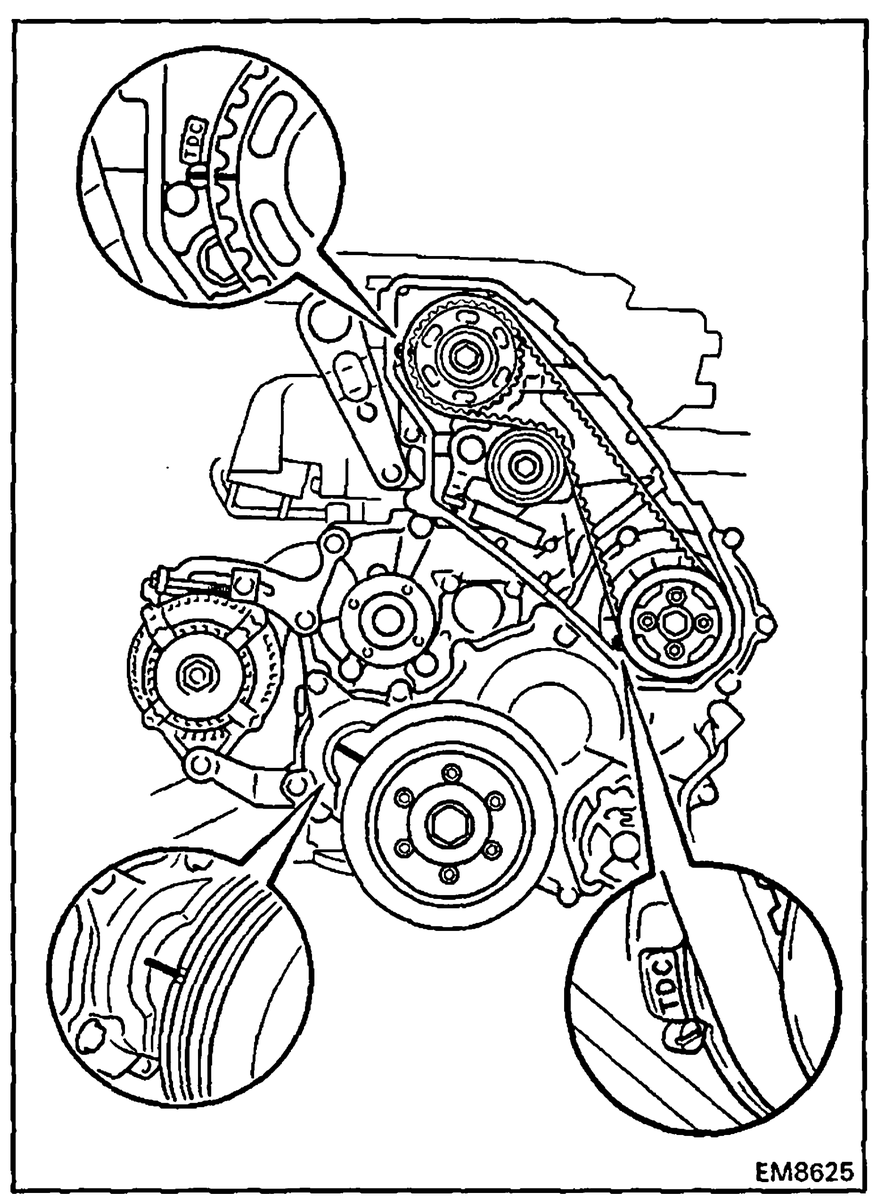

8. CHECK VALVE TIMING

Turn the crankshaft pulley clockwise and check that each pulley align with the timing marks (TDC mark) as shown in the illustration.

If the marks do not align, remove the timing belt and reinstall it.

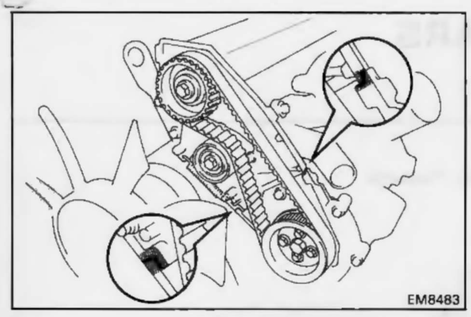

9. INSTALL TIMING BELT COVER

(a) Remove any old packing (FIPG) material.

(b) Apply seal packing to the camshaft oil seal retainer and timing gear cover as shown in the illustration.

Seal packing: Part No.08826-00080 or equivalent

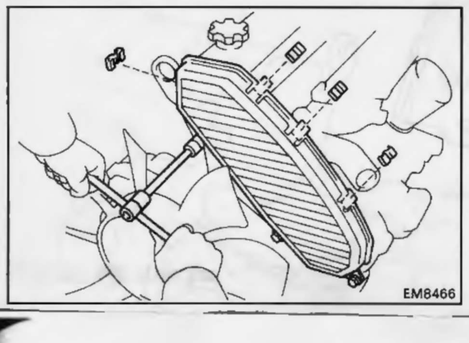

(c) Install the gasket to the timing belt cover.

(d) Install the timing belt cover with the three seal washers, three bolts and four clips.

Parts Adjustment

(Diesel Engine)

Adjustment of Interval Switch for Timing Belt Warning System

NOTICE: Work carefully so that components are not damaged in any way.

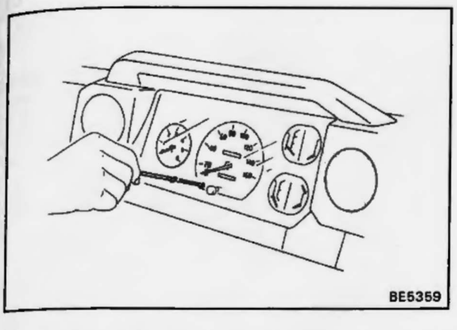

RESET CANCEL SWITCH

(a) Remove the gromet from the meter glass.

(b) Push the reset switch.

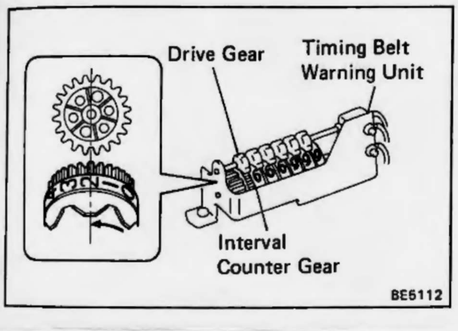

IF REPLACING TIMING BELT BEFORE WARNING LIGHT LIGHTS UP

(a) Remove the timing belt warning unit from the speedometer.

(b) When installing the timing belt warning unit to the speedometer, rotate the interval counter gear in the direction of the arrow so that the tooth at number "2" on the interval counter gear engages with the drive gear on the speedometer side.

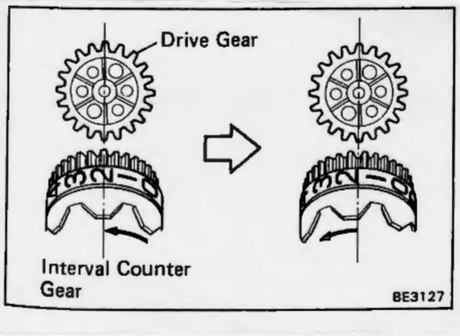

HINT: If the tooth at number "2" on the interval counter gear does not engage with the drive gear, move the tooth at number "2" slightly in the direction of the arrow until the tooth engage.

(c) Install the timing belt warning unit to the speedometer.

HINT: If turn on the timing belt warning light, reset the cancel switch.

TIMING GEARS

COMPONENTS

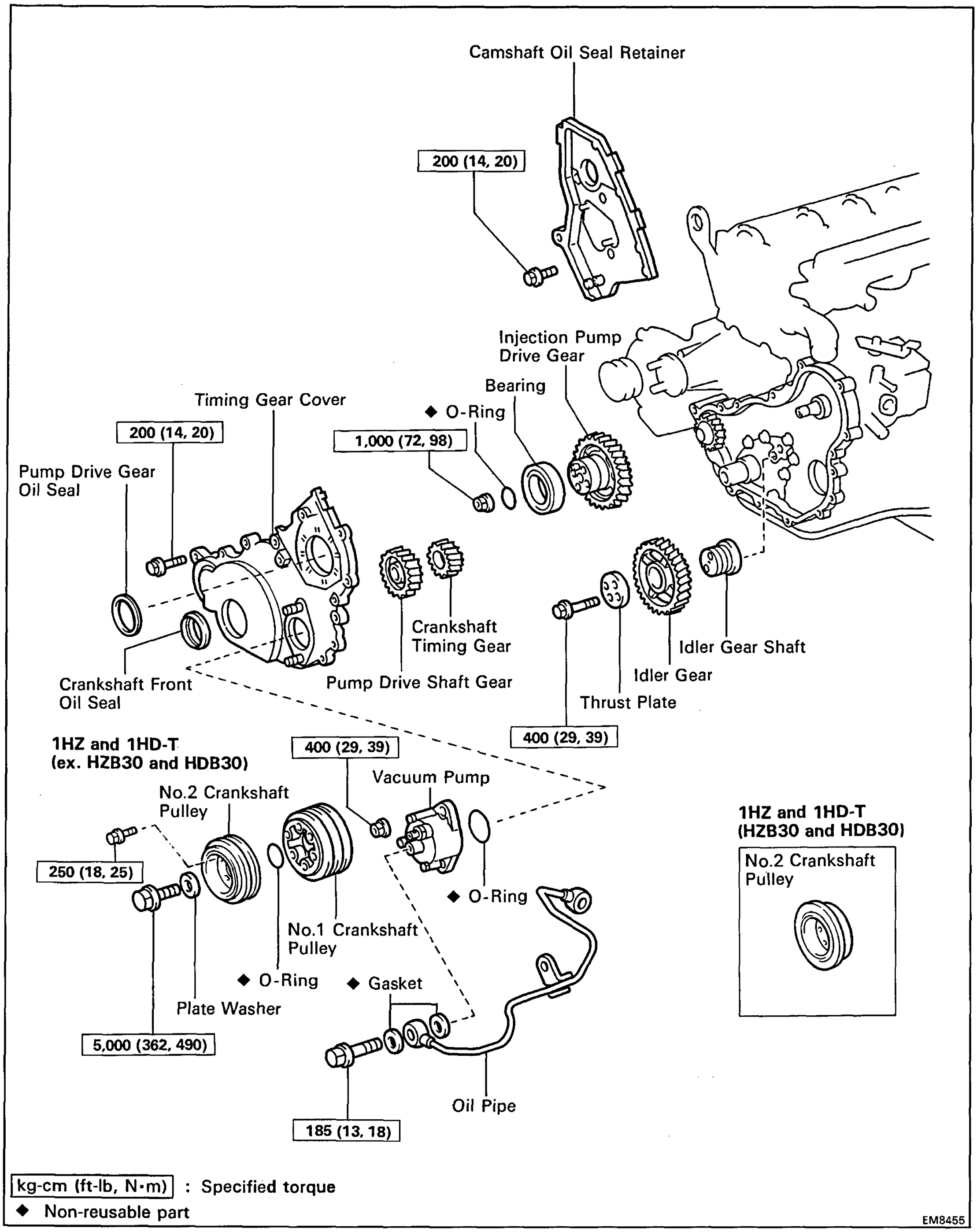

REMOVAL OF TIMING GEARS

(See page EM-42)

1. **REMOVE DRIVE BELT, FAN AND WATER PUMP PULLEY**
   (See step 2 on page CO-7)

2. **REMOVE TIMING BELT AND PULLEYS**
   (See page EM-32)

3. **REMOVE CAMSHAFT OIL SEAL RETAINER**
   (See step 14 on page EM-59)

4. **REMOVE OIL PIPE**
   (a) Remove the two union bolts and four gaskets.
   (b) Remove the bolt and oil pipe.

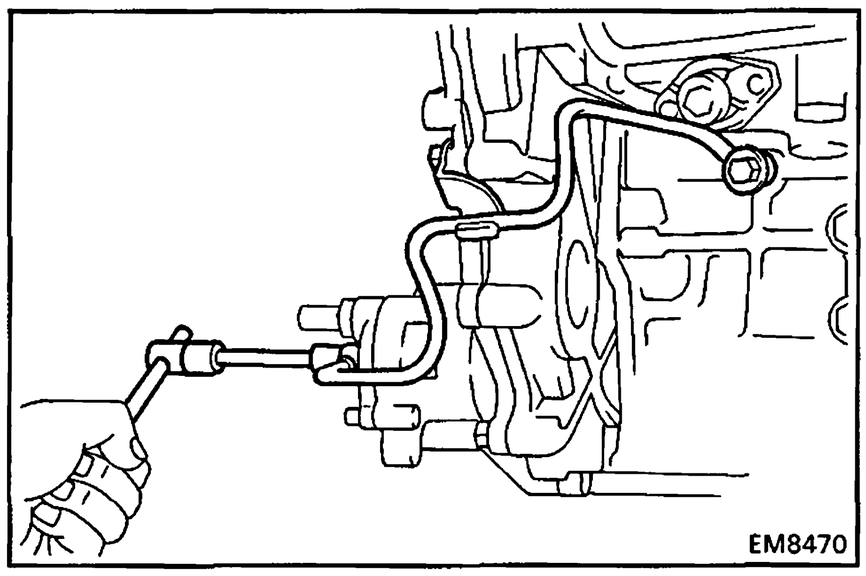

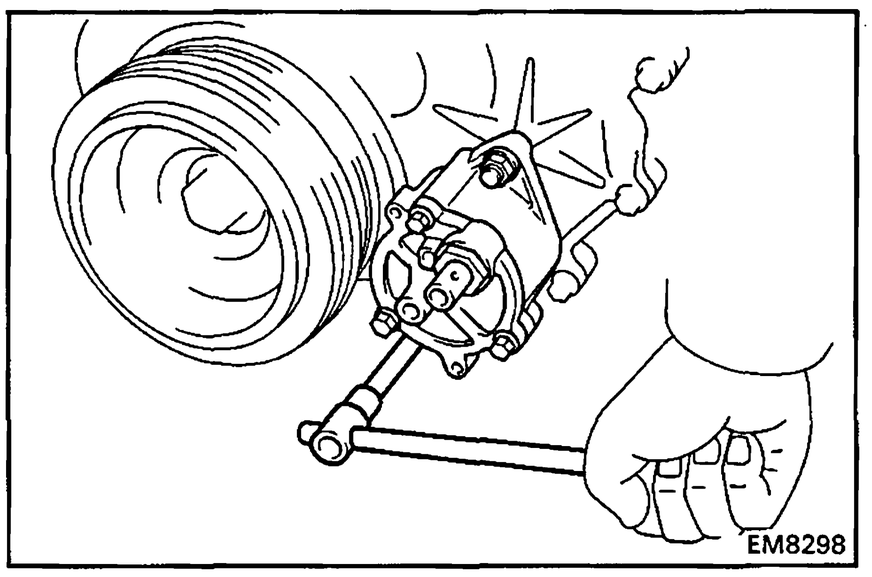

5. **REMOVE VACUUM PUMP**
   (a) Remove the two nuts and vacuum pump.
   (b) Remove the O-ring.

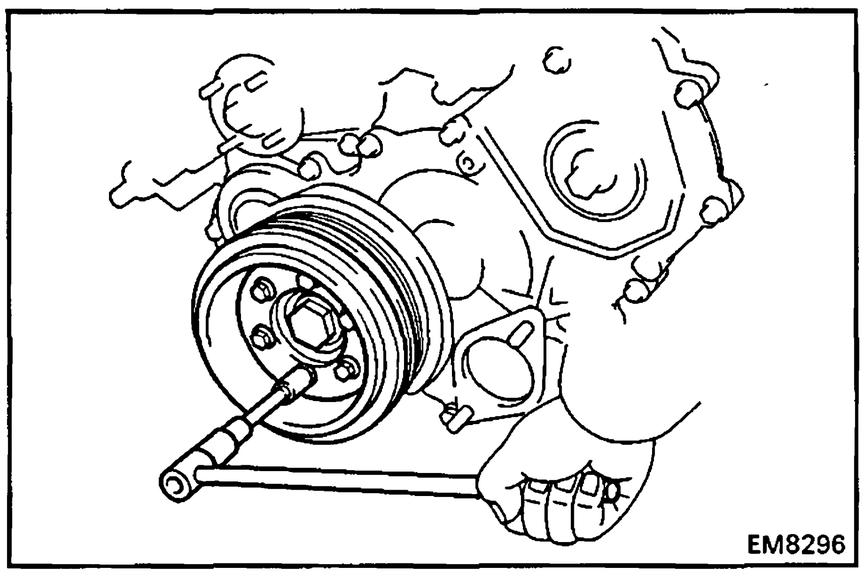

6. **(1HZ and 1HD-T)**
   REMOVE NO.2 CRANKSHAFT PULLEY
   Remove the six bolts and No.2 crankshaft pulley.

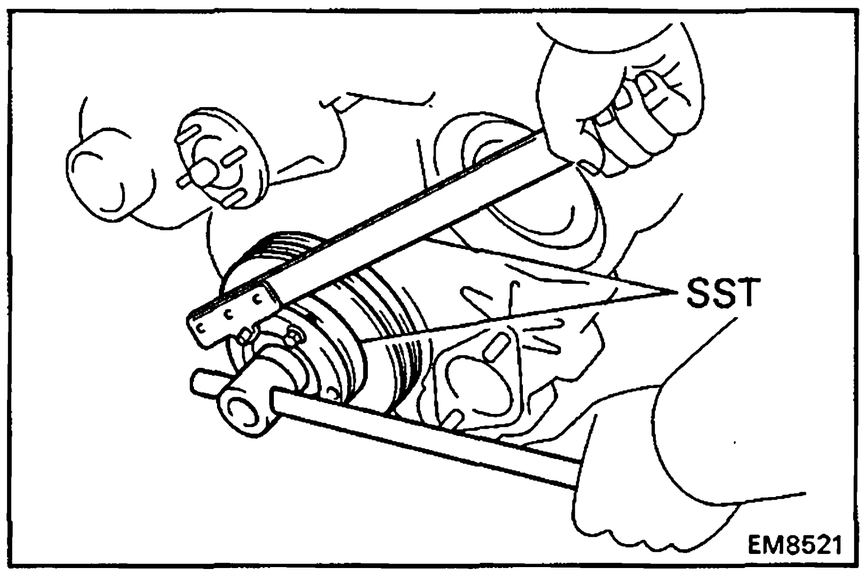

7. **REMOVE NO.1 CRANKSHAFT PULLEY**
   (a) Using SST, remove the pulley bolt and plate.
   SST 09213-58011 and 09330-00021

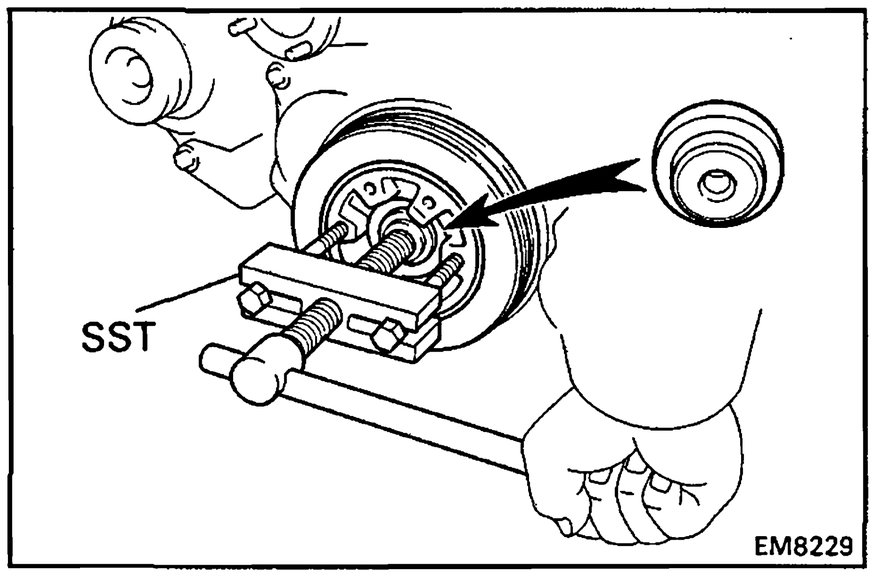

(b) Using SST, remove the No.1 crankshaft pulley.

SST 09213-60017 (09213-00020, 09213-00030, 09213-00060) and 09950-20017

(c) Remove the O-ring from the No.1 crankshaft pulley.

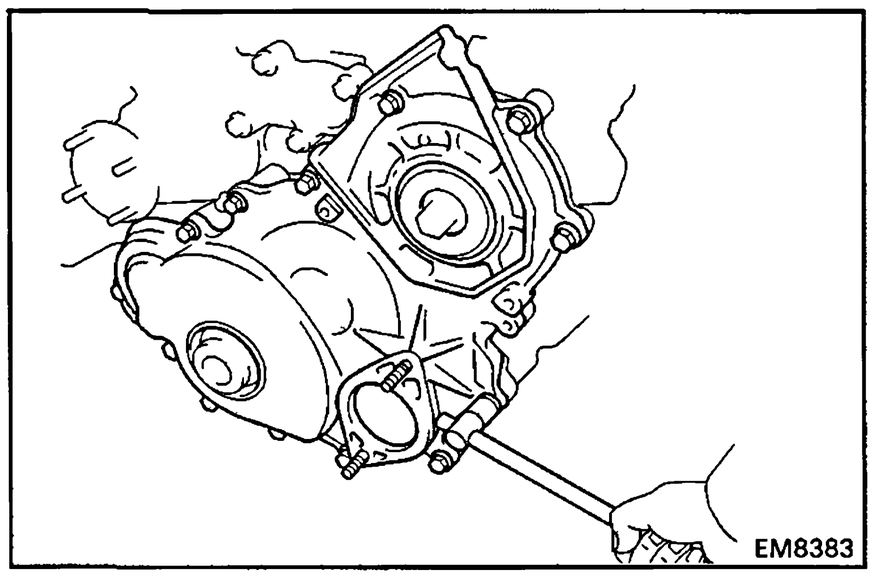

8. REMOVE TIMING GEAR COVER

(a) Remove the fourteen bolts.

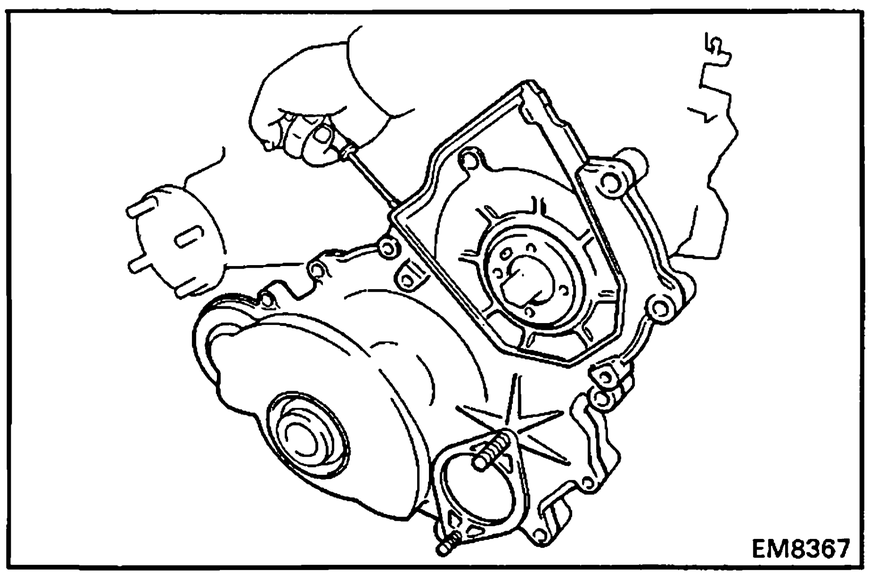

(b) Pry out the timing gear cover.

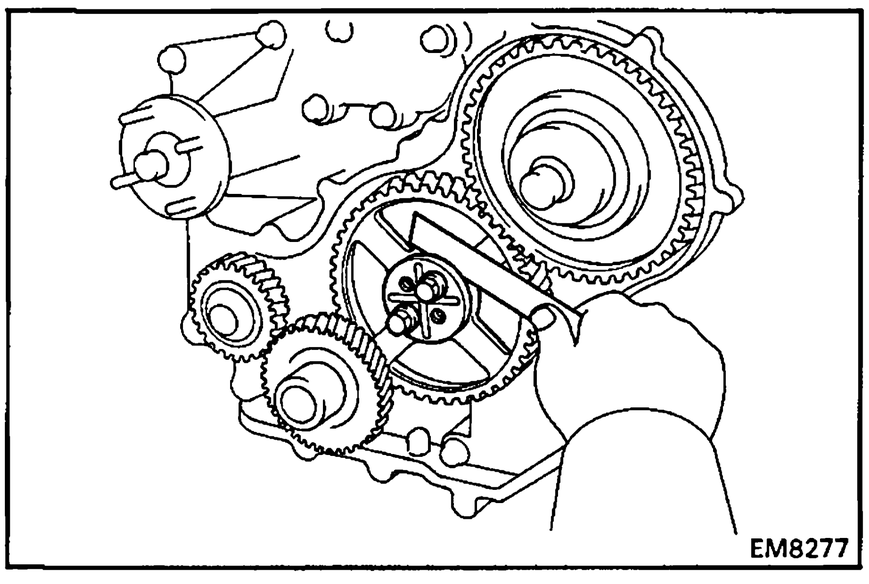

9. CHECK THRUST CLEARANCE OF IDLER GEAR

Using a thickness gauge, measure the thrust clearance.

Standard thrust clearance: 0.05 – 0.15 mm (0.0020 – 0.059 in.)

Maximum thrust clearance: 0.30 mm (0.0118 in.)

If the thrust clearance is greater than maximum, replace the thrust plate. If necessary, replace the idler gear and/or idler gear shaft.

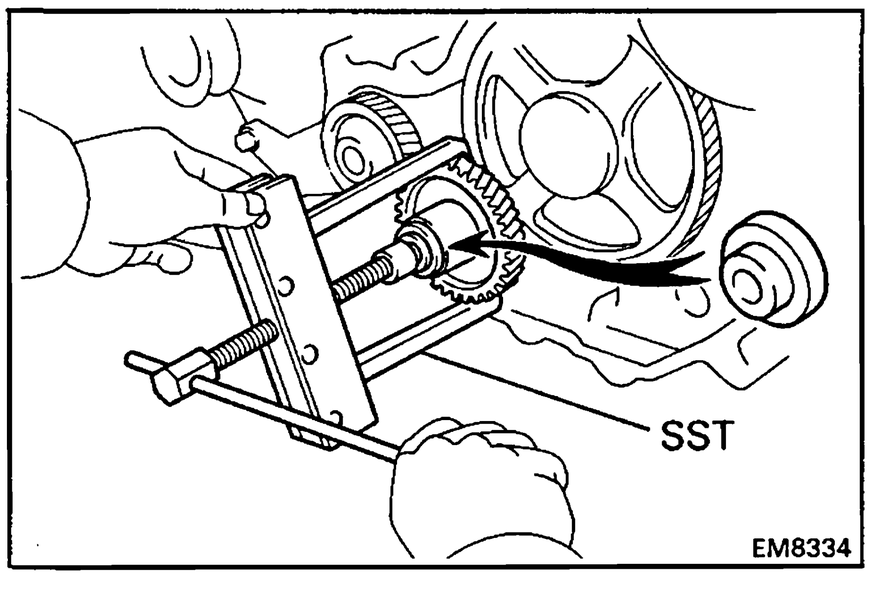

10. REMOVE PUMP DRIVE SHAFT GEAR

Using SST, remove the pump drive shaft gear.

SST 09213-36020 and 09950-20017

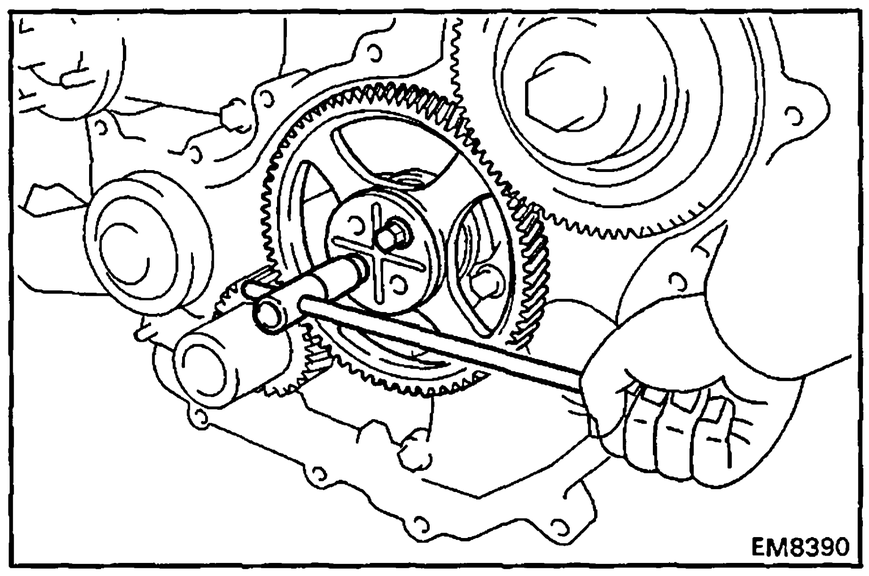

11. REMOVE IDLER GEAR

Remove the two bolts, thrust plate, idler gear and idler gear shaft.

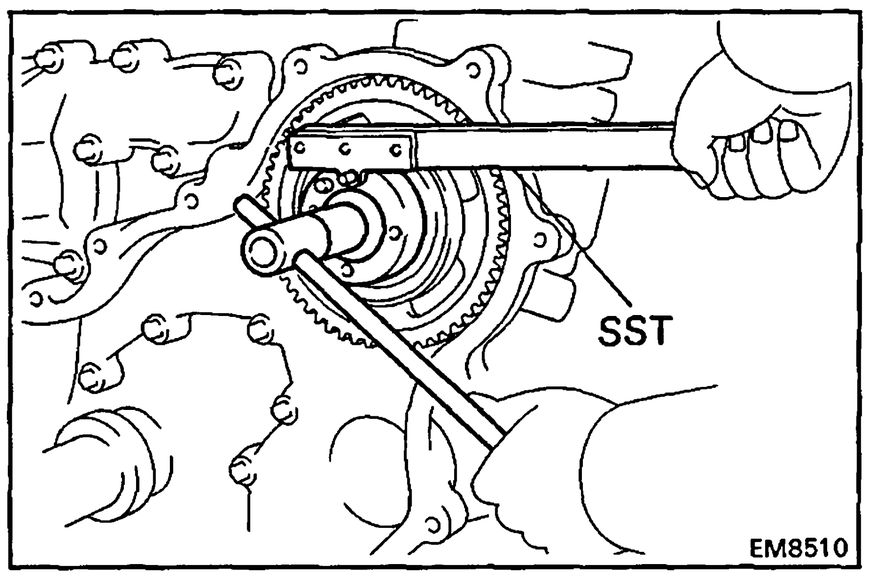

12. REMOVE INJECTION PUMP DRIVE GEAR

(a) Using SST, remove the injection pump drive gear set nut.

SST 09330-00021

(b) Remove the O-ring.

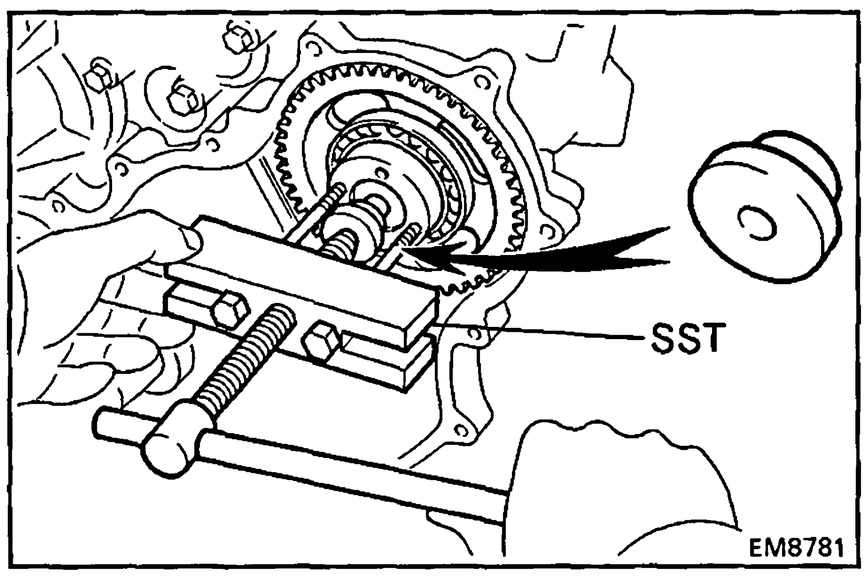

(c) Using SST, remove the injection pump drive gear.

SST 09213-60017 (09213-00020, 09213-00030, 09213-00060) and 09950-20017

NOTICE:

- **Tighten the two bolts of SST more than 8 mm (0.31 in.)**
- **Set the SST so that it is balanced.**

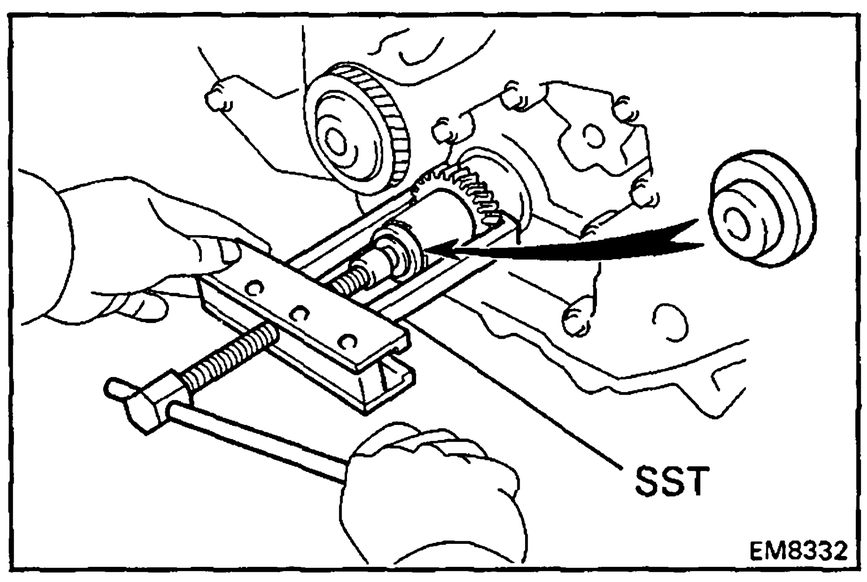

13. REMOVE CRANKSHAFT TIMING GEAR

Using SST, remove the crankshaft timing gear.

SST 09213-36020 and 09950-20017

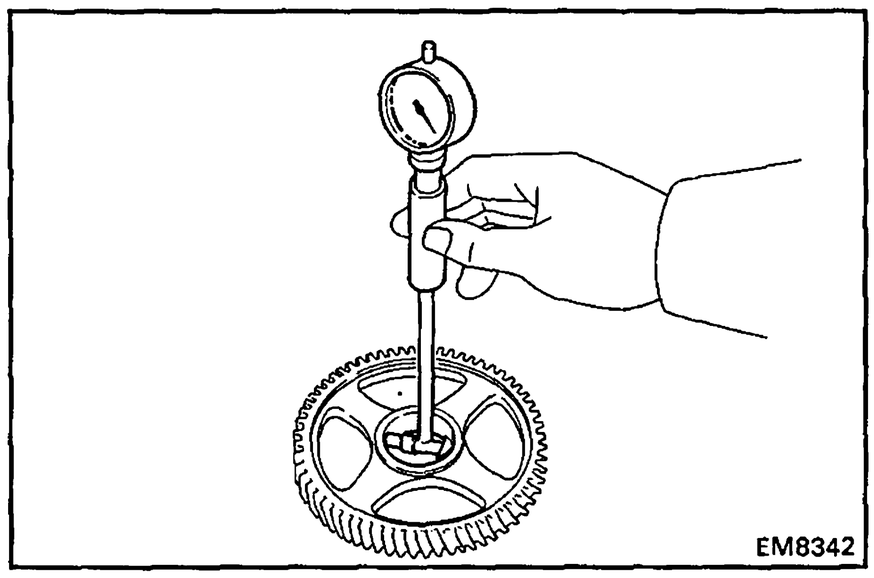

INSPECTION OF TIMING GEARS

1. INSPECT IDLER GEAR

(a) Using a cylinder gauge, measure the inside diameter of the idler gear.

Idler gear inside diameter: 45.000 – 45.025 mm (1.7717 – 1.7726 in.)

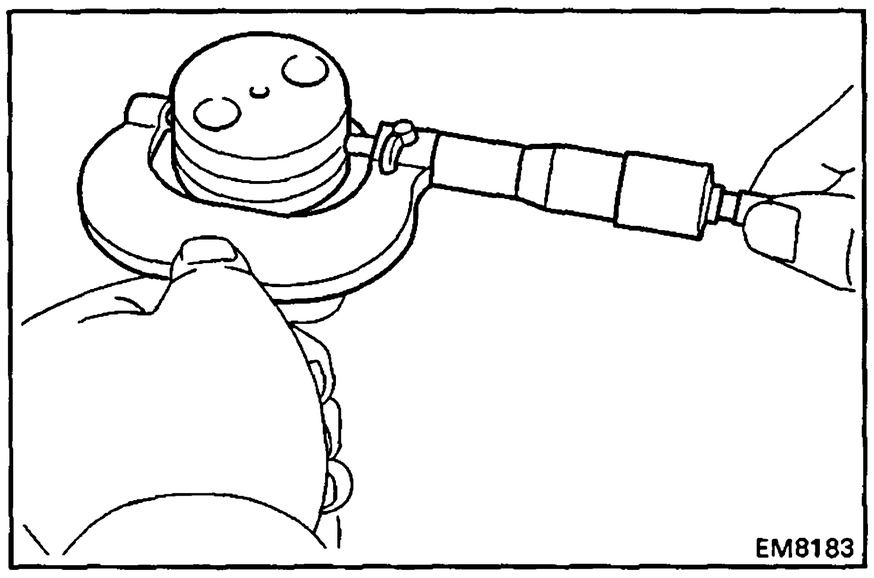

(b) Using a micrometer, measure the diameter of the idler gear shaft.

Idler gear shaft diameter: 44.950 – 44.975 mm (1.7697 – 1.7707 in.)

(c) Subtract the idler gear shaft diameter measurement from the idler gear inside diameter measurement.

Standard oil clearance: 0.025 – 0.075 mm (0.0010 – 0.0030 in.)

Maximum oil clearance: 0.20 mm (0.0079 in.)

If the clearance is greater than maximum, replace the gear and shaft.

2. INSPECT INJECTION PUMP DRIVE GEAR BEARING

Check that bearing is not rough or worn.

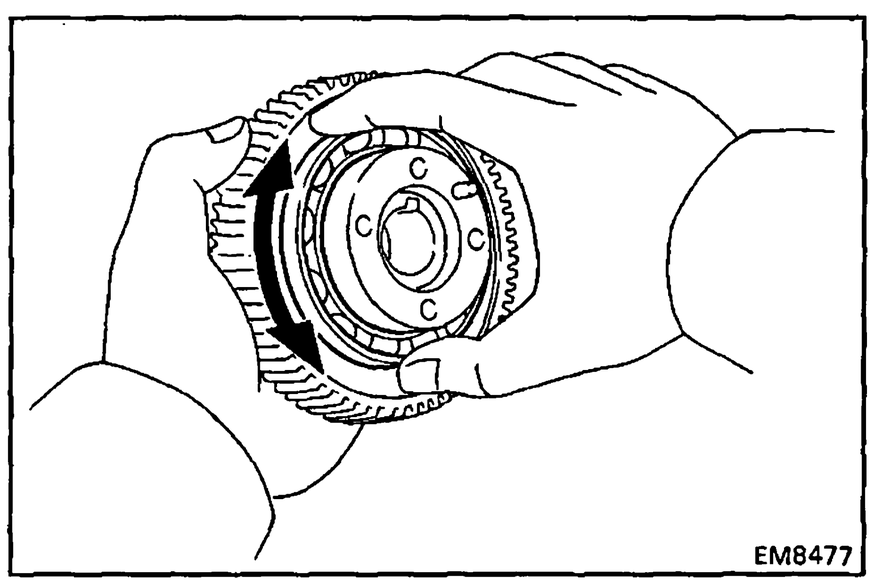

3. IF NECESSARY, REPLACE INJECTION PUMP DRIVE GEAR BEARING

A. Remove bearing

Using SST, remove the bearing.

SST 09950-20017

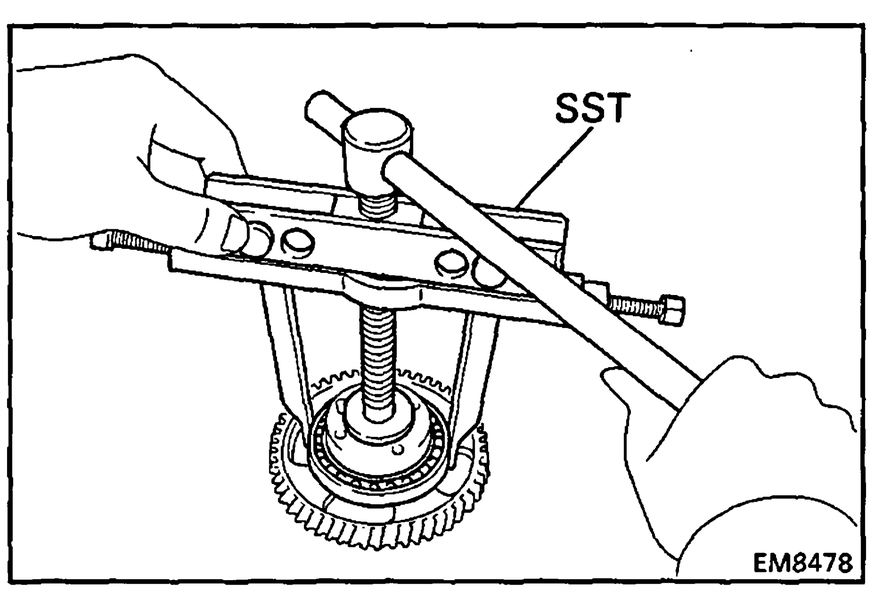

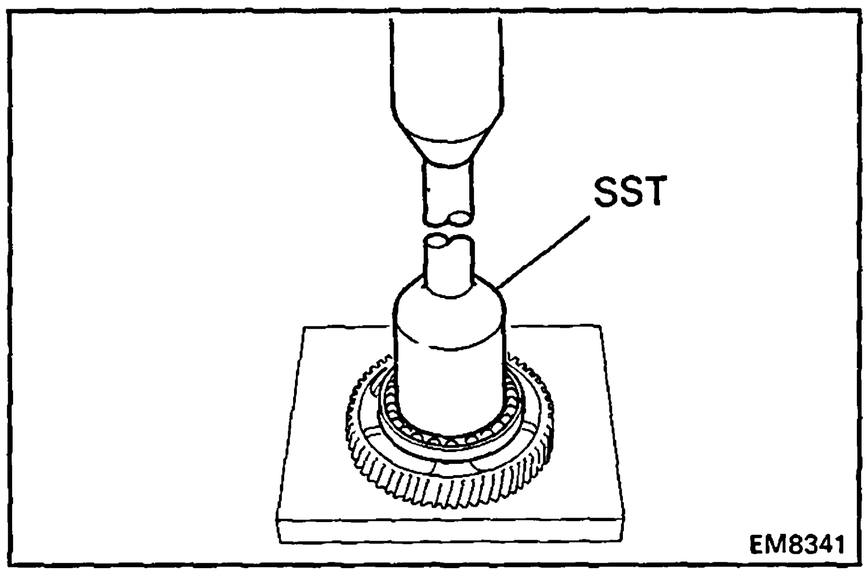

B. Install bearing

Using SST and a press, press in a new bearing.

SST 09214-76011

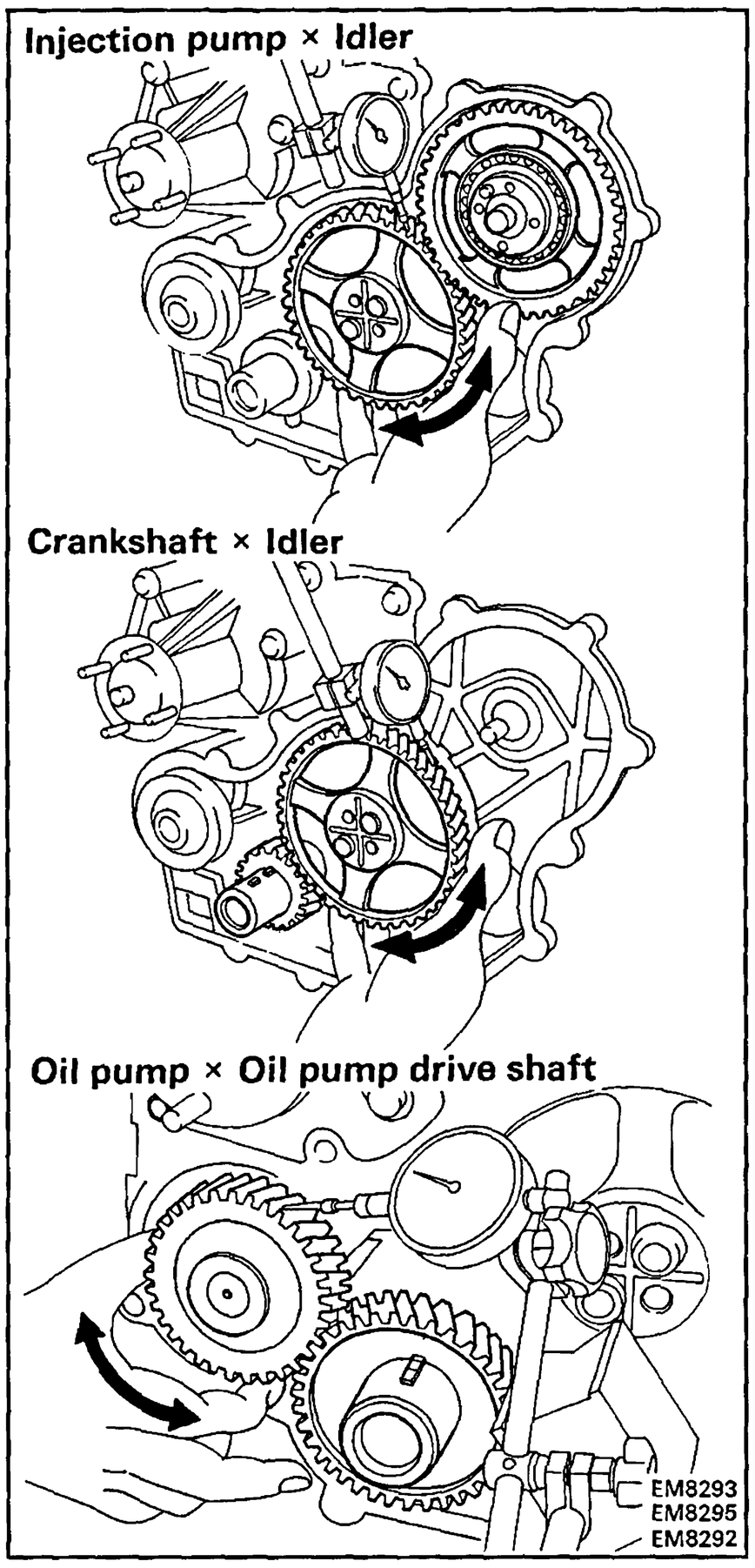

4. CHECK BACKLASH OF TIMING GEARS

Using a dial indicator, measure the backlash.

Standard gear backlash: 0.05 – 0.15 mm (0.0020 – 0.0060 in.)

Maximum gear backlash: 0.30 mm (0.0118 in.)

If the gear backlash is greater than maximum, replace the gears as a set.

REPLACEMENT OF CRANKSHAFT FRONT OIL SEAL

HINT: There are two methods (A and B) to replace the oil seal as follows:

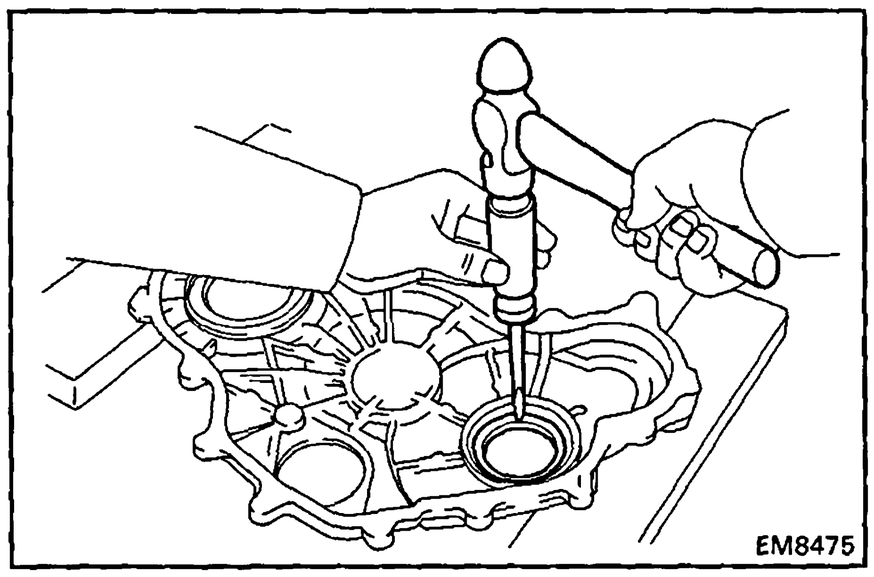

REPLACE CRANKSHAFT FRONT OIL SEAL

A. If timing gear cover is removed from cylinder block:

(a) Using a screwdriver and hammer, tap out the oil seal.

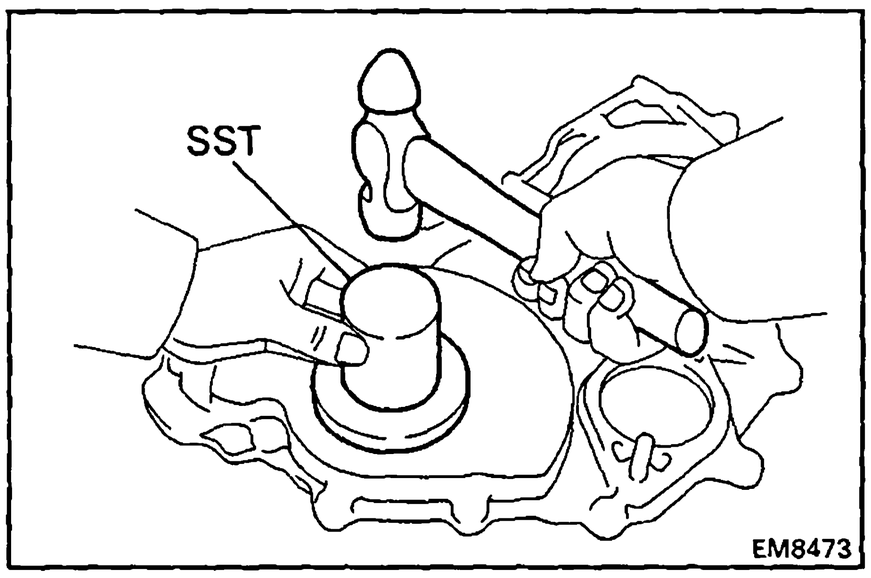

(b) Using SST and a hammer, tap in a new oil seal until its surface is flush with the timing gear cover edge.

SST 09223-78010

(c) Apply MP grease to the oil seal lip.

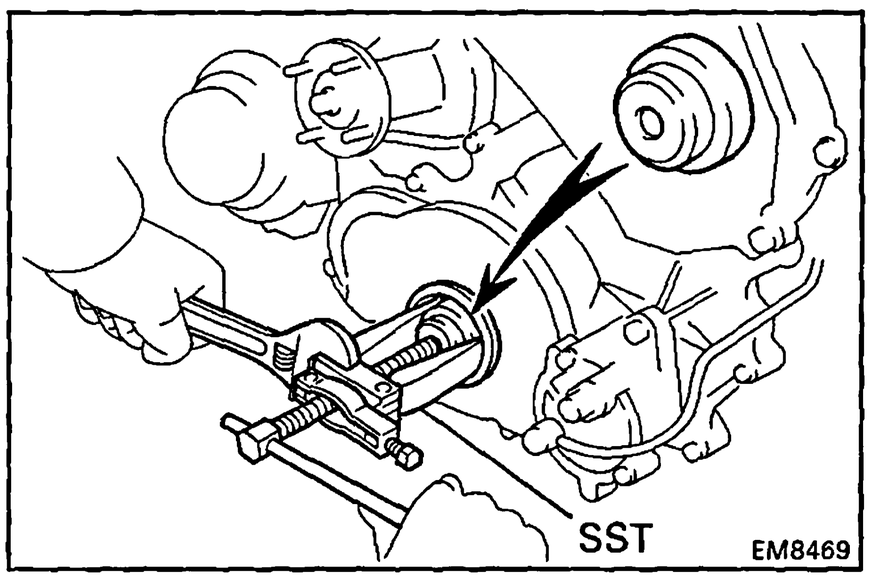

B. If timing gear cover is installed to the cylinder block:

(a) Using SST, remove the oil seal.

SST 09308-10010 and 09950-20017

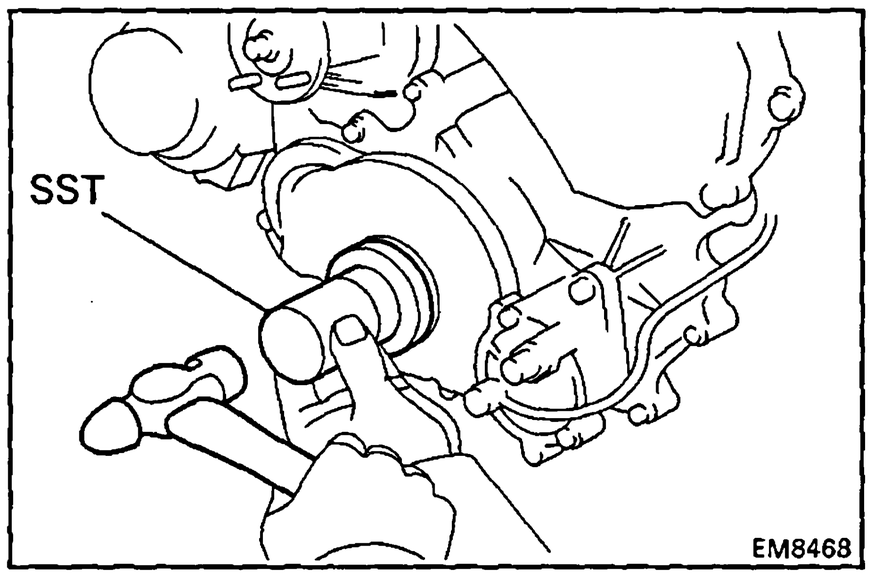

(b) Apply MP grease to a new oil seal lip.

(c) Using SST and a hammer, tap in the oil seal until its surface is flush with the timing gear cover edge.

SST 09223-78010

REPLACEMENT OF INJECTION PUMP DRIVE GEAR OIL SEAL

HINT: There are two methods (A and B) to replace the oil seal as follows:

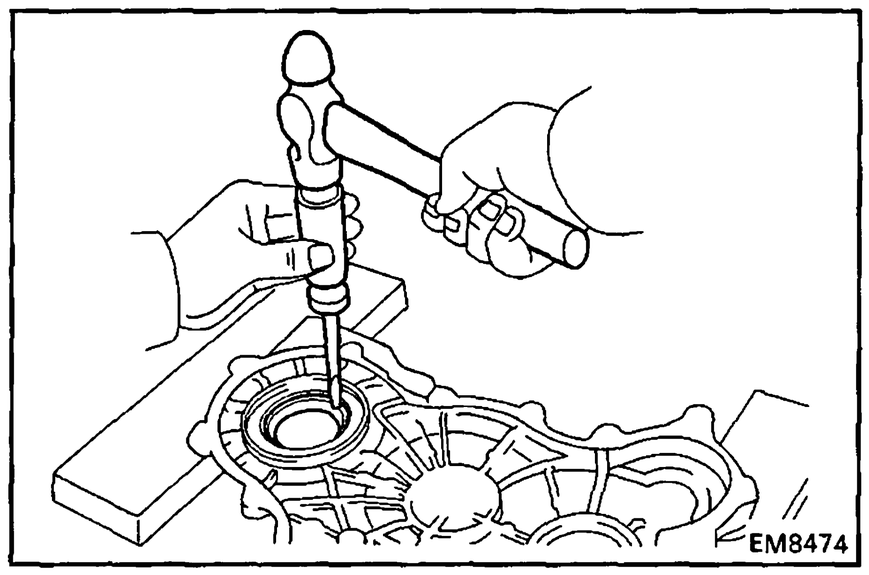

REPLACE INJECTION PUMP DRIVE GEAR OIL SEAL

A. If timing gear cover is removed from cylinder block:

(a) Using a screwdriver and hammer, tap out the oil seal.

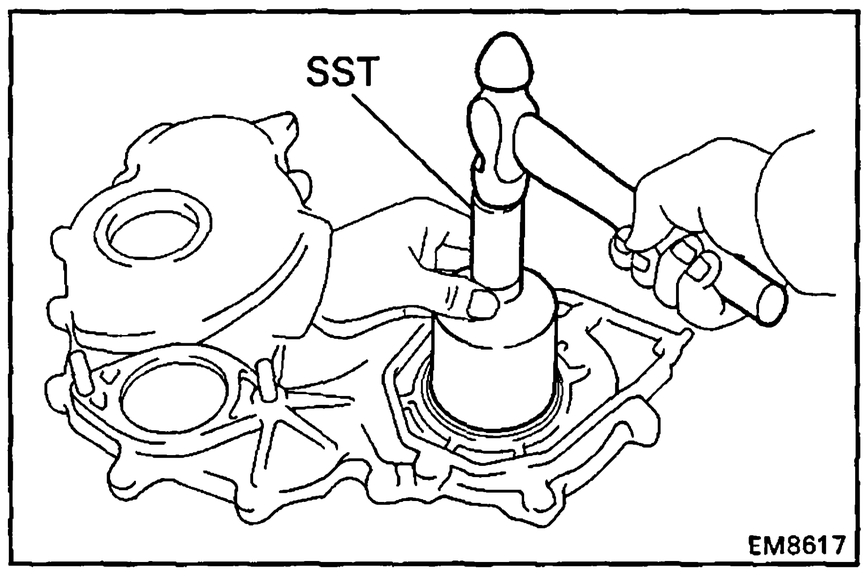

(b) Using SST and a hammer, tap in a new oil seal until its surface is flush with the timing gear cover edge.

SST 09214-76011

(c) Apply MP grease to the oil seal lip.

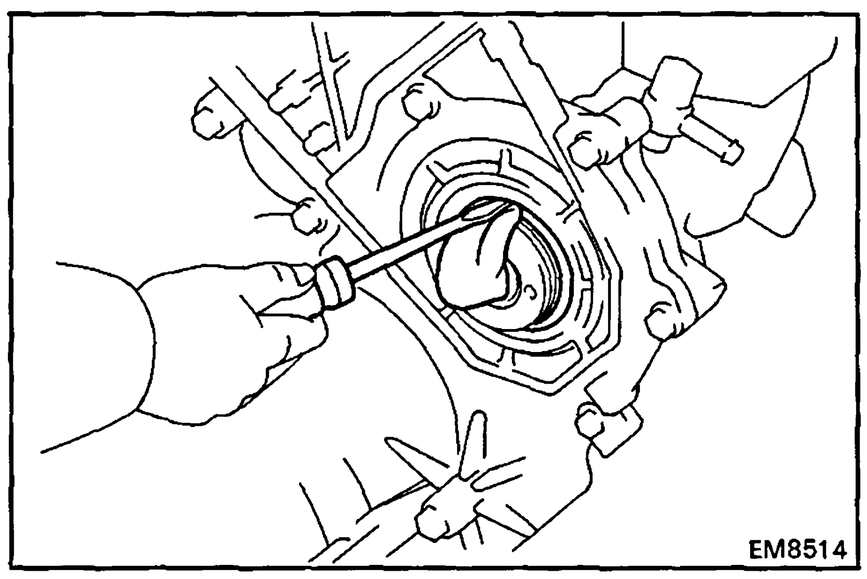

B. If timing gear cover is installed to the cylinder block:

(a) Using a screwdriver, pry out the oil seal.

NOTICE: Be careful not to damage the injection pump drive gear. Tape the screwdriver tip.

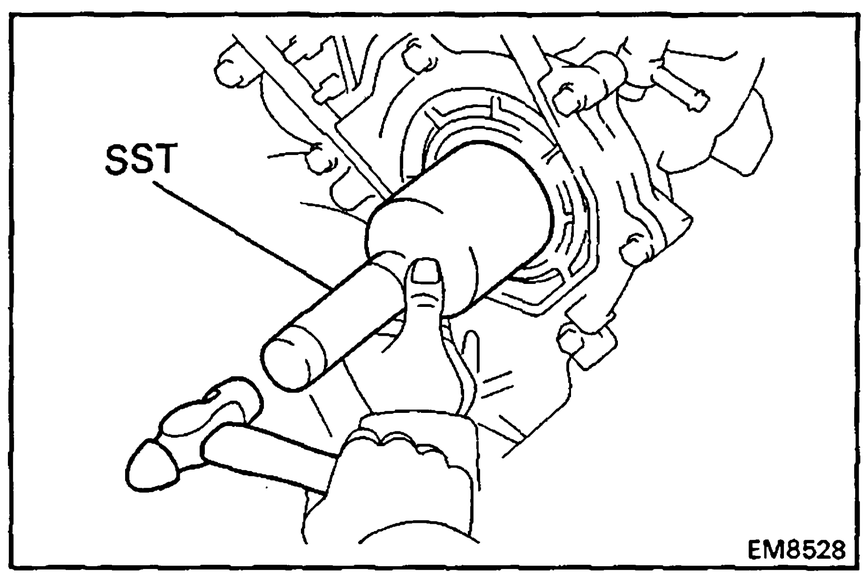

(b) Apply MP grease to the oil seal lip.

(c) Using SST and a hammer, tap in a new oil seal until its surface is flush with the timing gear cover edge.

SST 09214-76011

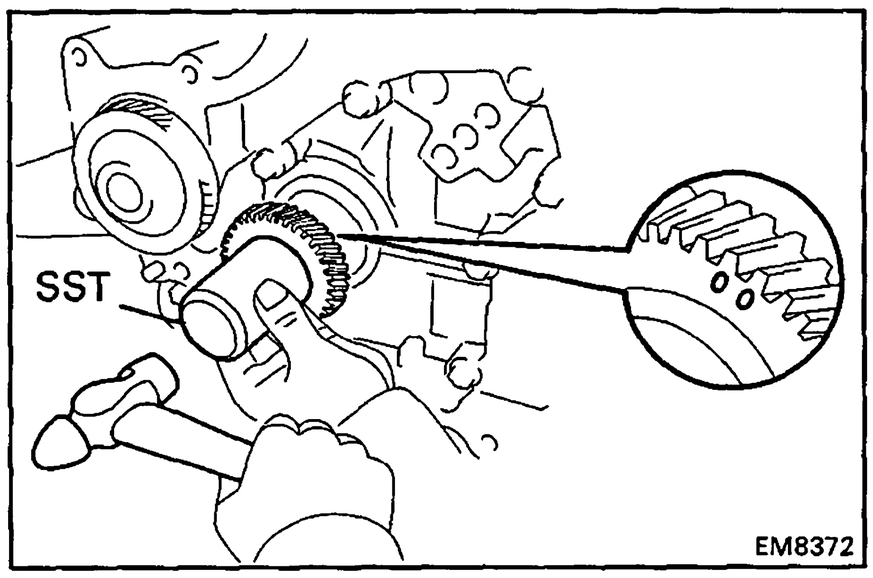

INSTALLATION OF TIMING GEARS

(See page EM-42)

1. INSTALL CRANKSHAFT TIMING GEAR

(a) Put the timing crankshaft timing gear with the timing mark facing frontward.

(b) Align the timing gear set key with the key groove of the timing gear.

(c) Using SST and a hammer, tap in the timing gear.

SST 09223-00010

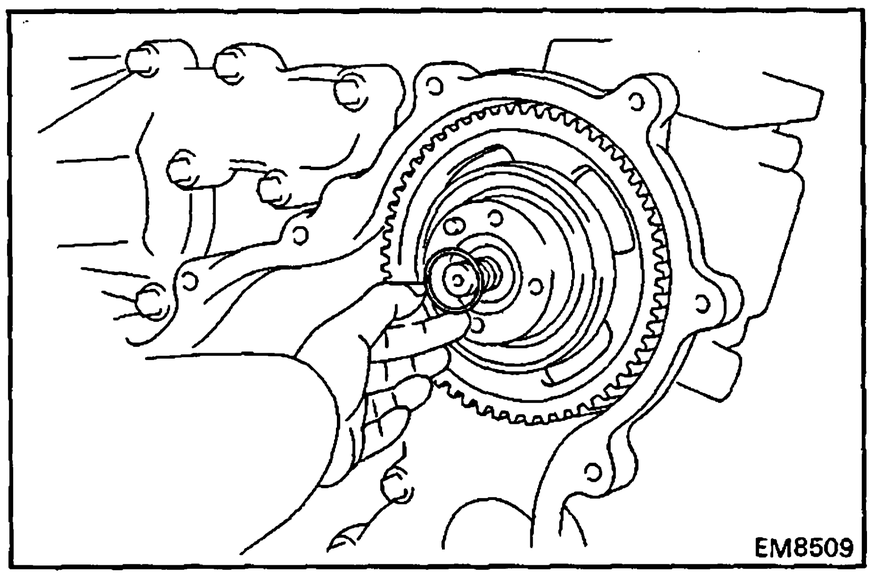

2. INSTALL INJECTION PUMP DRIVE GEAR

(a) Install the set key to the groove of the injection pump drive shaft.

(b) Align the set key with the key groove of the injection pump drive gear and install the drive gear.

(c) Install a new O-ring to the drive gear.

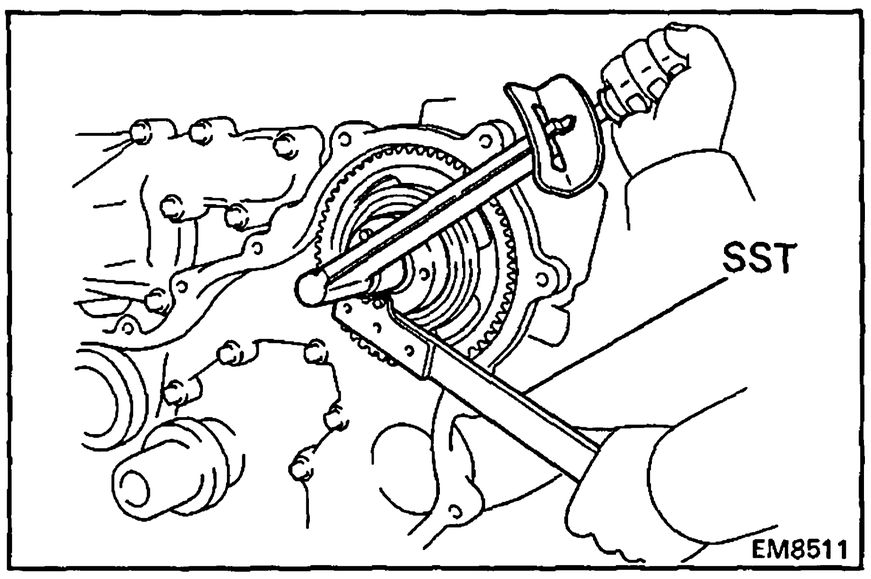

(d) Install the injection pump drive gear set nut.

(e) Using SST, torque the nut.

SST 09330-00021

Torque: 1,000 kg-cm (72 ft-lb, 98 N·m)

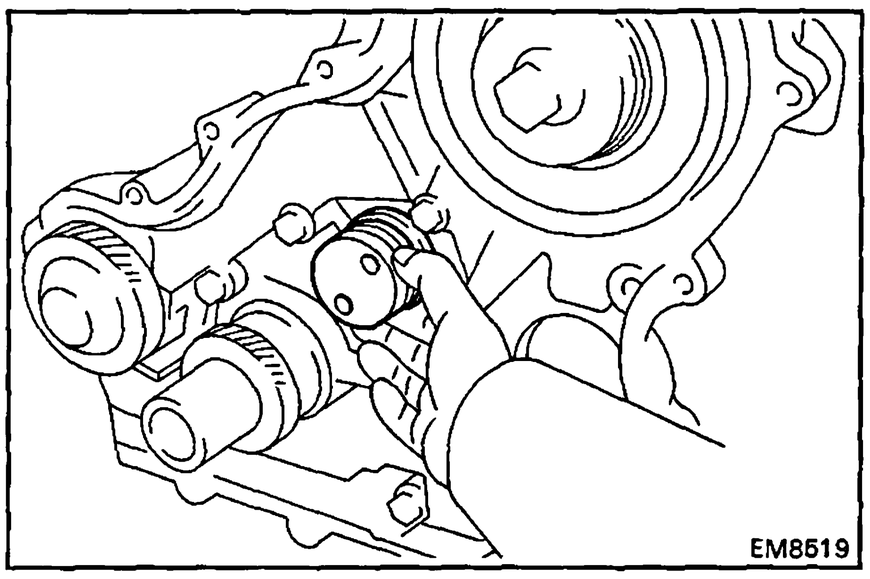

3. INSTALL IDLER GEAR

(a) Install the idler gear shaft.

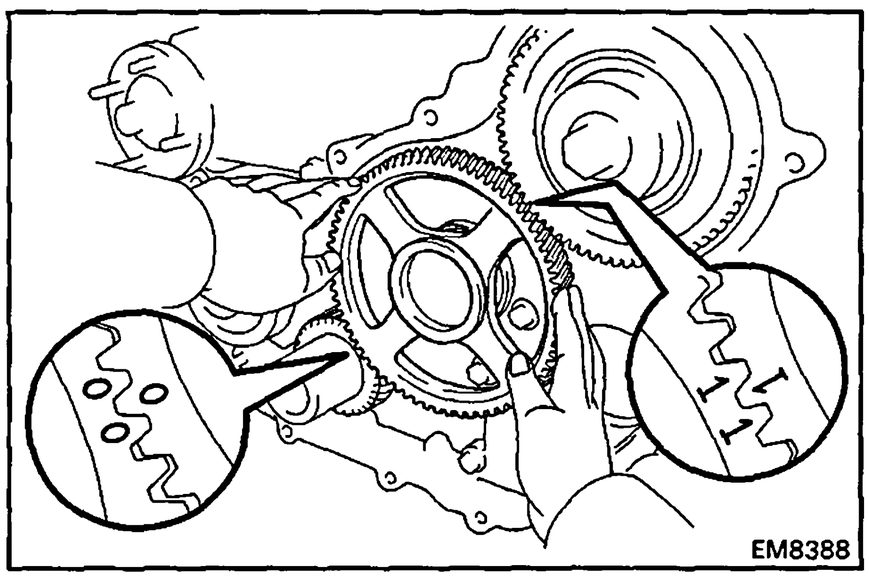

(b) Align the idler gear timing marks "0" and "1" with the crankshaft timing gear mark "0" and injection pump drive gear timing mark "1" respectively, and mesh the gears.

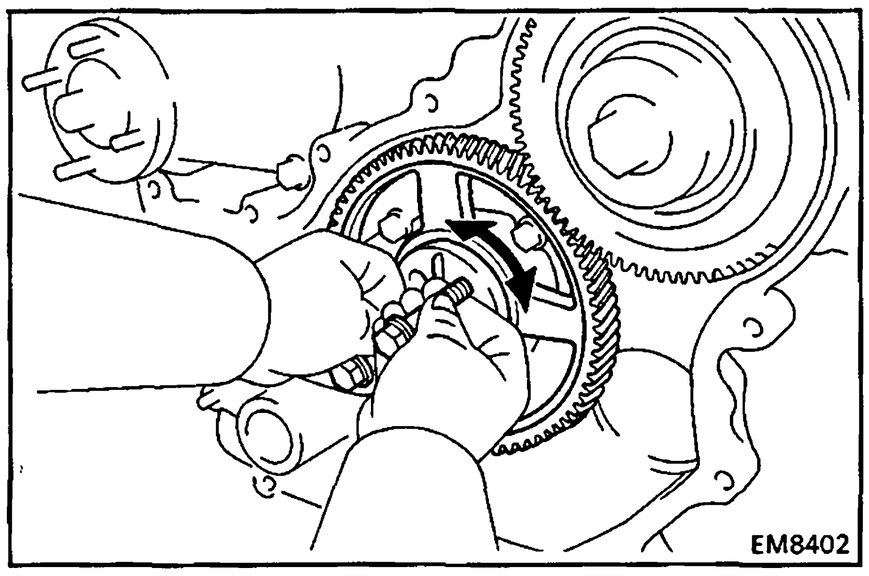

(c) Align the thrust plate set bolt holes.

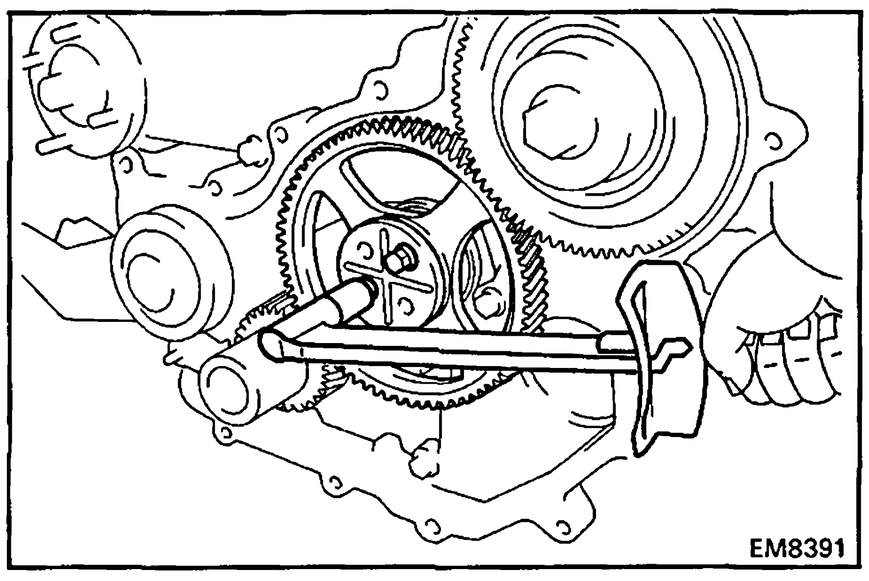

(d) Install the thrust plate with the two bolts. Torque the bolts.

Torque: 400 kg-cm (29 ft-lb, 39 N·m)

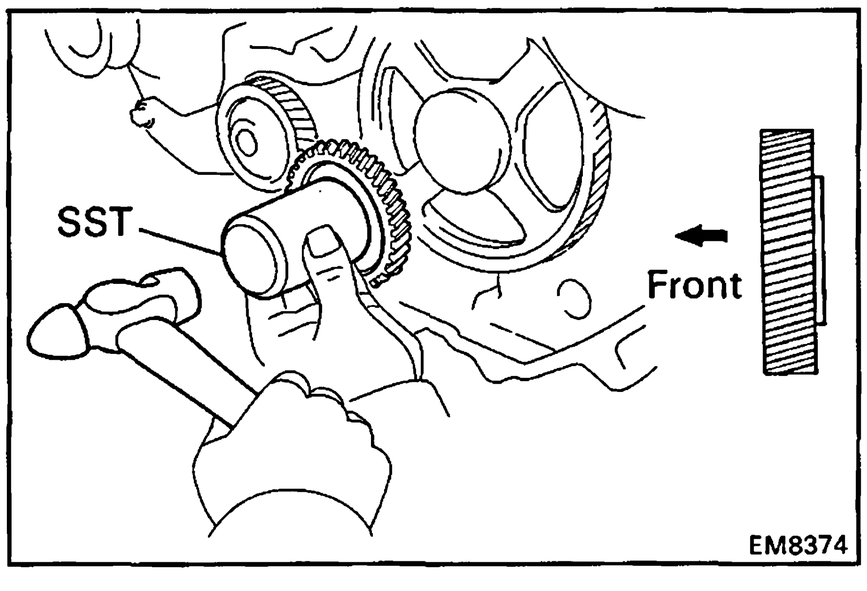

4. INSTALL PUMP DRIVE SHAFT GEAR

(a) Align the pump drive shaft gear set key with the key groove of the drive shaft gear.

(b) Using SST and a hammer, tap in the pump drive shaft gear.

SST 09223-00010

5. INSTALL TIMING GEAR COVER

(a) Remove any old packing (FIPG) material and be careful not to drop any oil on the contact surfaces of the timing gear cover and cylinder block.

- Using a razor blade and gasket scraper, remove all the old packing (FIPG) material from the gasket surfaces and sealing groove.
- Thoroughly clean all components to remove all the loose material.
- Using a non-residue solvent, clean both sealing surfaces.

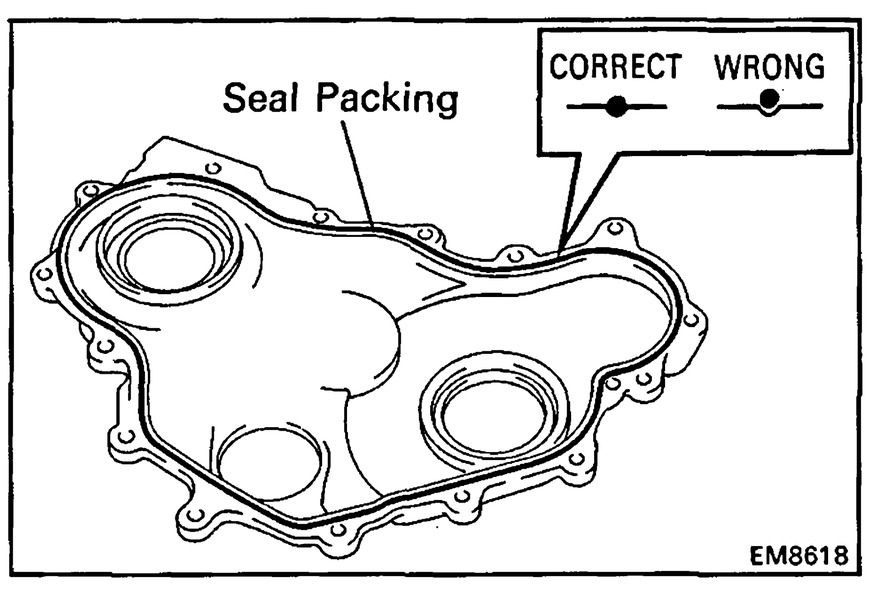

(b) Apply seal packing to the timing gear cover as shown in the illustration.

Seal packing: Part No.08826-00080 or equivalent

- Install a nozzle that has been cut to a 2 – 3 mm (0.08 – 0.12 in.) opening.
- Parts must be assembled within 5 minutes of application. Otherwise the material must be removed and reapplied.
- Immediately remove nozzle from the tube and reinstall cap.

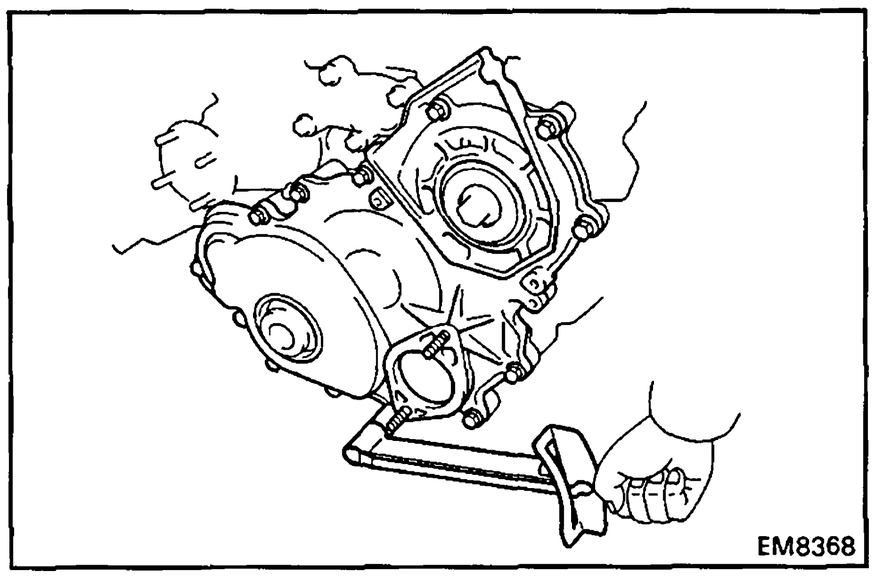

(c) Install the timing gear cover with the fourteen bolts.

Torque: 200 kg-cm (14 ft-lb, 20 N·m)

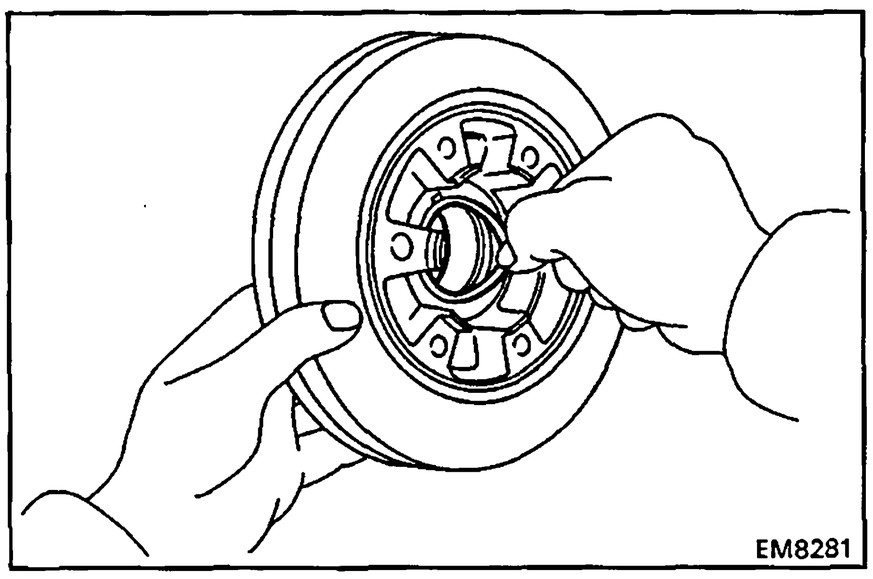

6. INSTALL NO.1 CRANKSHAFT PULLEY

(a) Install a new O-ring in the No.1 crankshaft pulley groove.

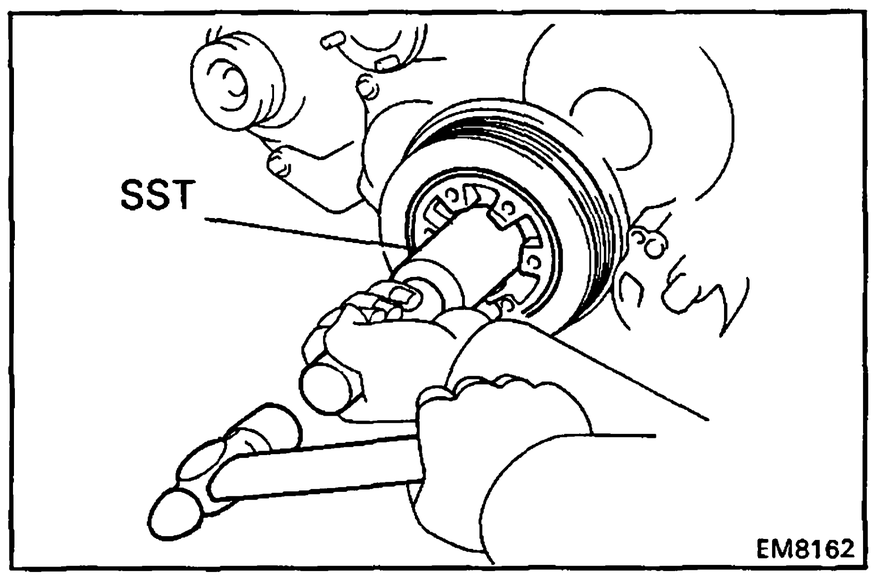

(b) Align the pulley set key with the key groove of the pulley.

(c) Using SST and a hammer, tap in the pulley.

SST 09214-60010

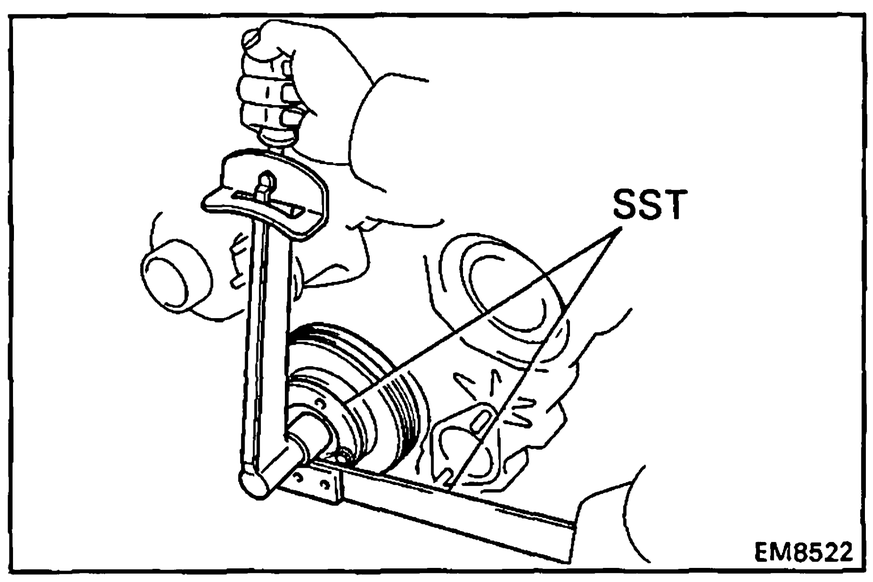

(d) Using SST, install and torque the plate and bolt.

Torque: 5,000 kg-cm (362 ft-lb, 490 N·m)

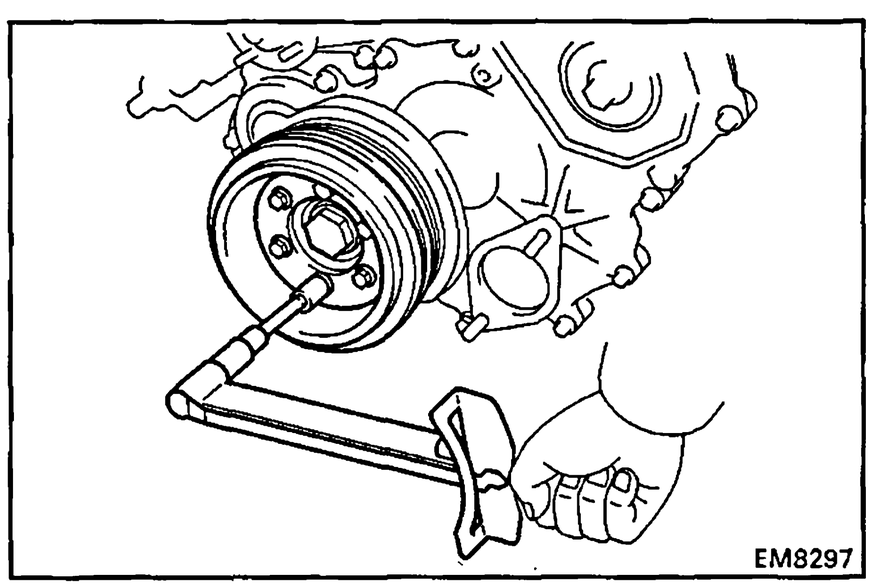

7. (1HZ and 1HD-T) INSTALL NO.2 CRANKSHAFT PULLEY

Install the No.2 crankshaft pulley with the six bolts.

Torque: 250 kg-cm (18 ft-lb, 25 N·m)

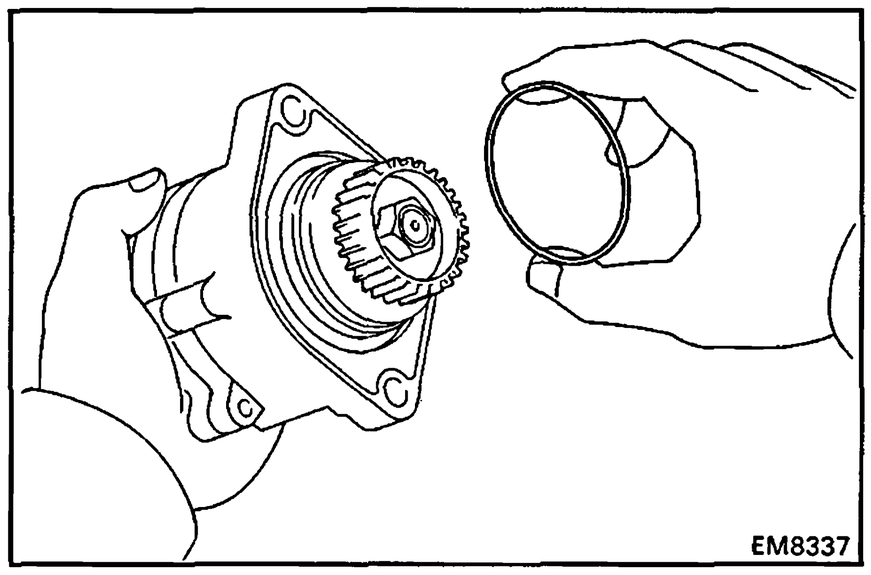

8. INSTALL VACUUM PUMP

(a) Install a new O-ring to the vacuum pump.

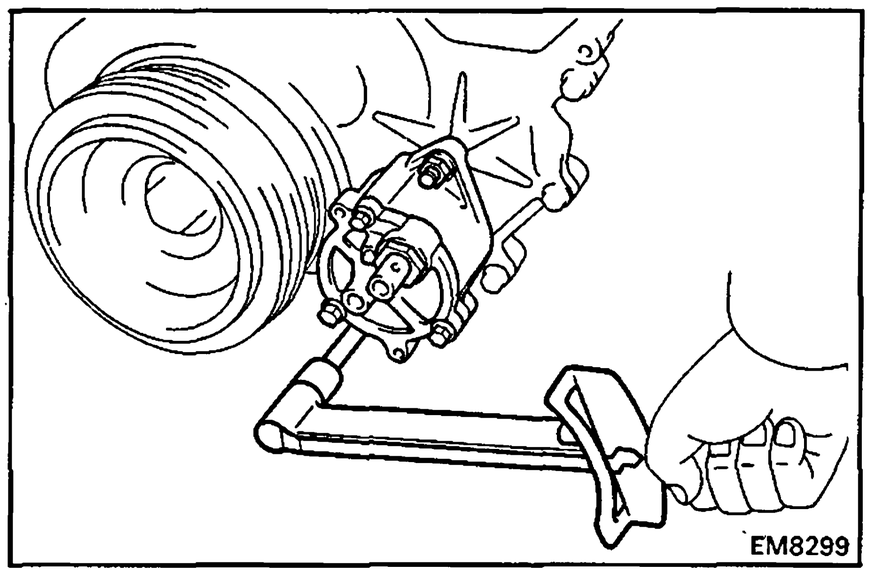

(b) Install the vacuum pump with the two nuts.

Torque: 400 kg-cm (29 ft-lb, 39 N·m)

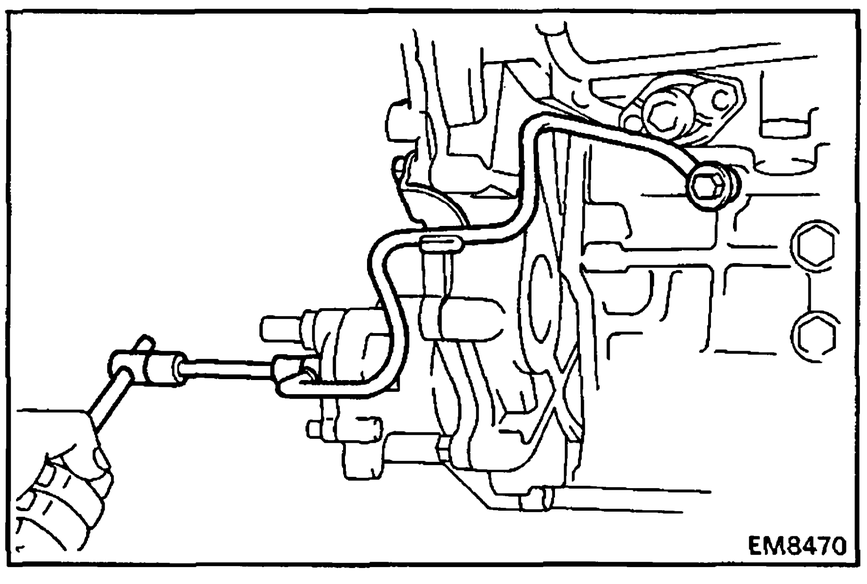

9. INSTALL OIL PIPE

Install the oil pipe with the bolt, two union bolts and four new gaskets.

Torque:	**Bolt**	**200 kg-cm (14 ft-lb, 20 N·m)**
	Union bolt	**185 kg-cm (13 ft-lb, 18 N·m)**

10. INSTALL CAMSHAFT OIL SEAL RETAINER

(See step 6 on page EM-79)

11. INSTALL PULLEYS AND TIMING BELT

(See page EM-38)

12. INSTALL WATER PUMP PULLEY, FAN AND DRIVE BELT

(See step 5 on page CO-9)

CYLINDER HEAD

COMPONENTS

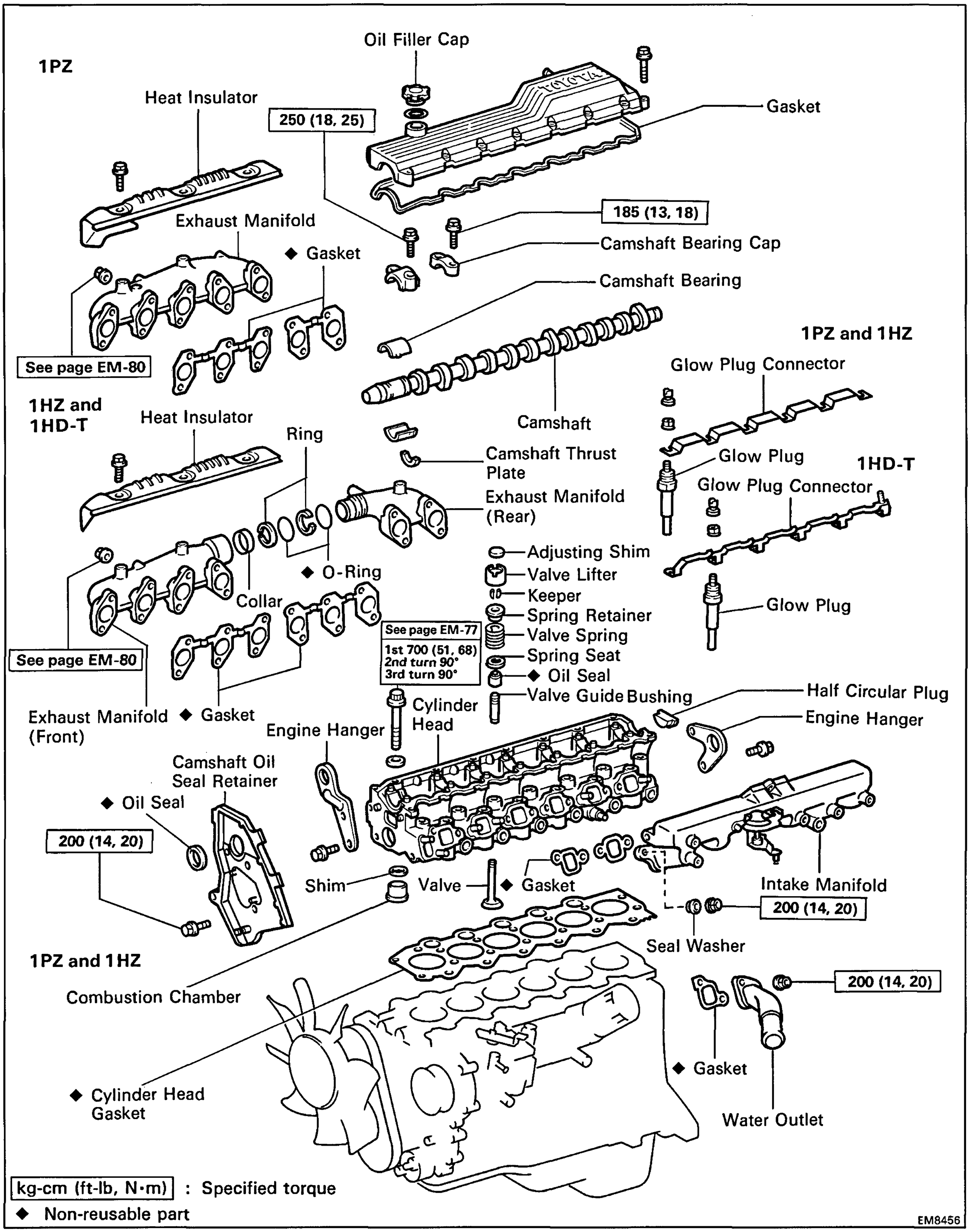

REMOVAL OF CYLINDER HEAD

(See page EM-54)

1. **DRAIN ENGINE COOLANT** (See page CO-4)

2. **REMOVE INTAKE PIPE**
   (See step 6 on page EM-34)

3. **REMOVE INJECTION PIPES**
   (See step 2 on page FU-9)

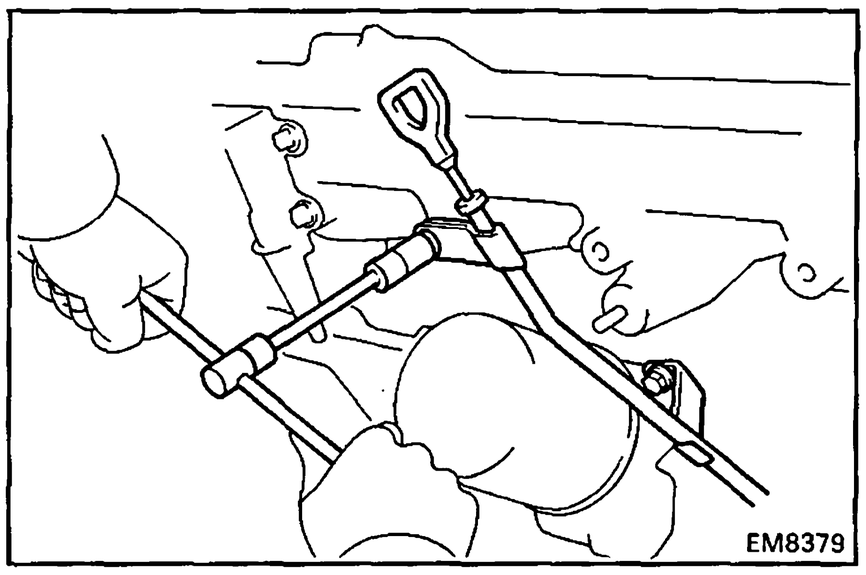

4. **REMOVE OIL DIPSTICK AND OIL DIPSTICK GUIDE**
   (a) Remove the two bolts, and the oil dipstick guide assembly.
   (b) Remove the O-ring from the oil dipstick guide.

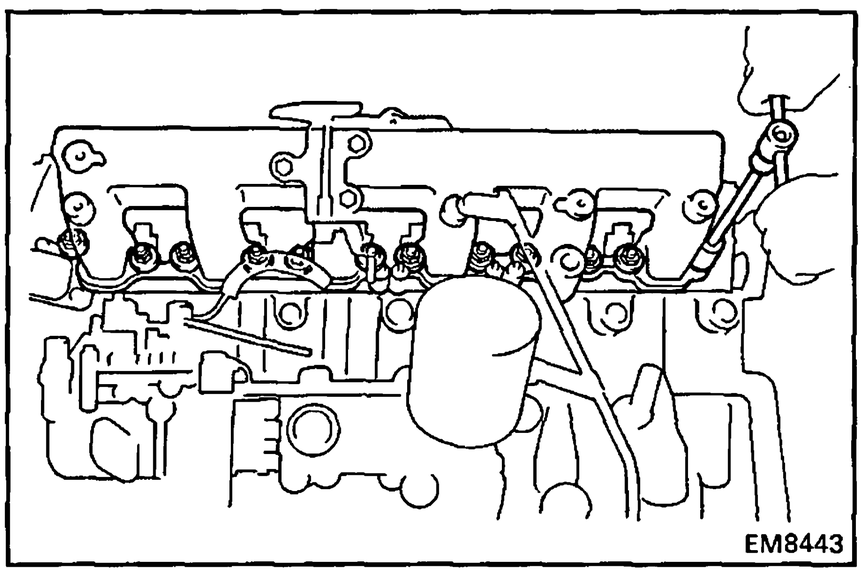

5. **REMOVE INTAKE MANIFOLD**
   (a) Disconnect the fuel hose from the nozzle leakage pipe.
   (b) (1PZ)
   Remove the ten bolts, seal washers, intake manifold and five gaskets.
   (c) (1HZ and 1HD-T)
   Remove the twelve bolts, seal washers, intake manifold and six gaskets.

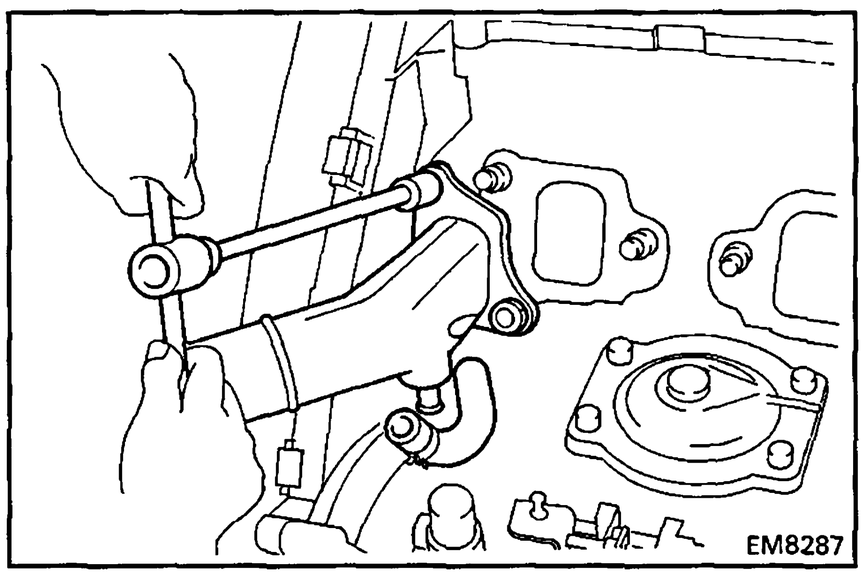

6. **REMOVE WATER OUTLET**
   (a) (1HD-T)
   Disconnect the water by-pass hose.
   (b) Remove the two nuts, water outlet and gasket.

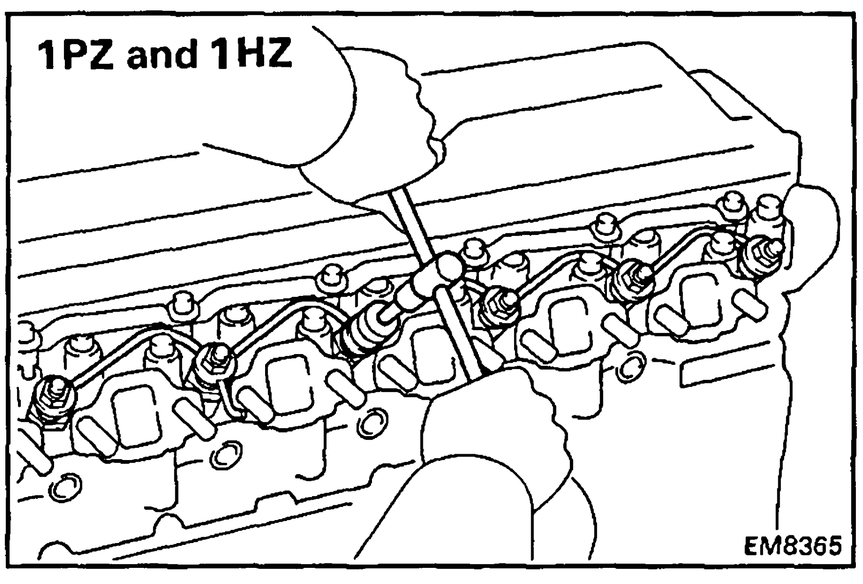

7. **REMOVE NOZZLE LEAKAGE PIPE (1PZ and 1HZ)**
   (a) (1PZ)
   Remove the five union nuts, nozzle leakage pipe and five gaskets.
   (b) (1HZ)
   Remove the six union nuts, nozzle leakage pipe and six gaskets.

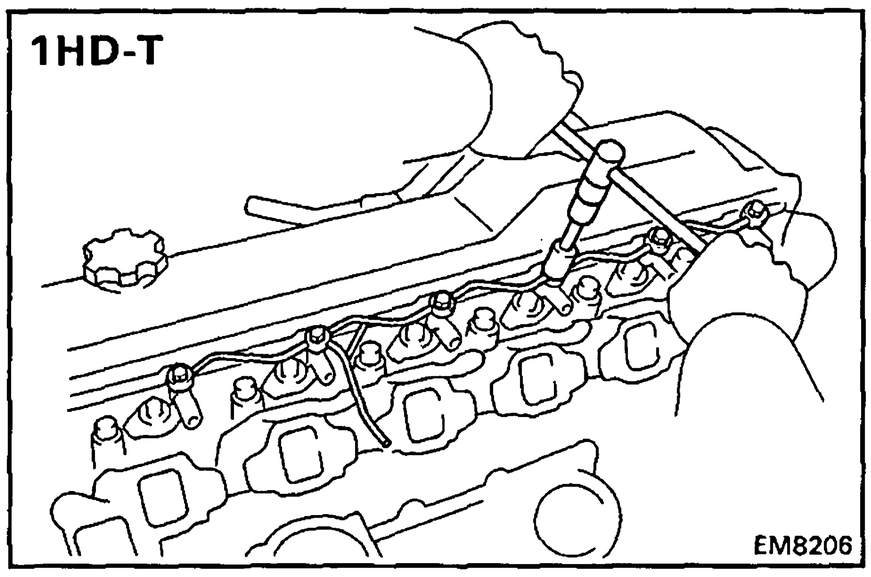

(1HD-T)

Remove the six hollow bolts, nozzle leakage pipe and twelve gaskets.

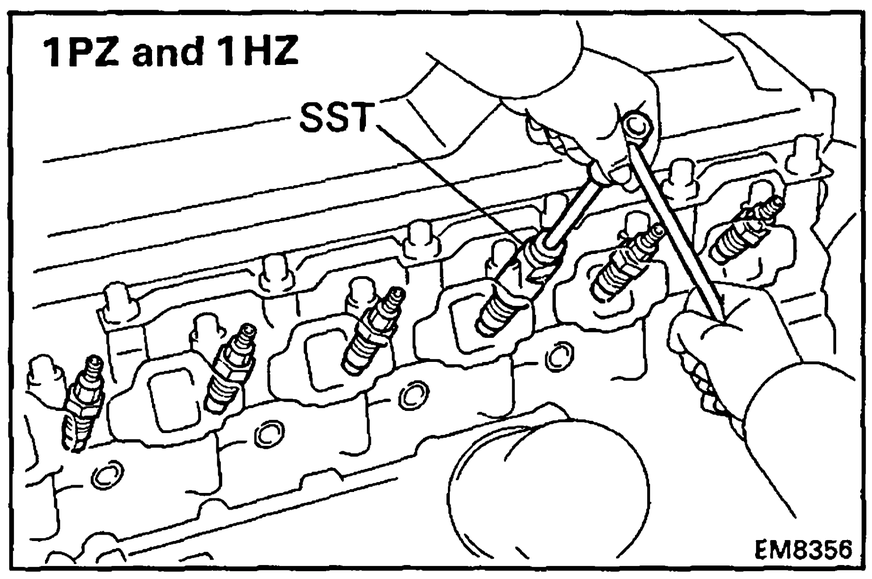

8. REMOVE INJECTION NOZZLES

(1PZ and 1HZ)

(a) (1PZ)
Using SST, remove the five injection nozzles, seats and gaskets.

SST 09268-64010

(b) (1HZ)
Using SST, remove the six injection nozzles, seats and gaskets.

SST 09268-64010

HINT: Arrange the injection nozzles in correct order.

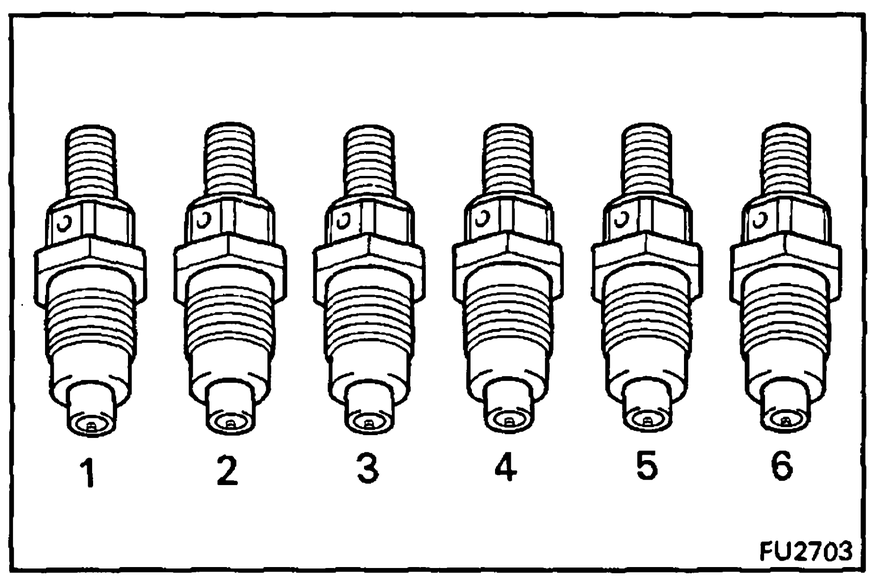

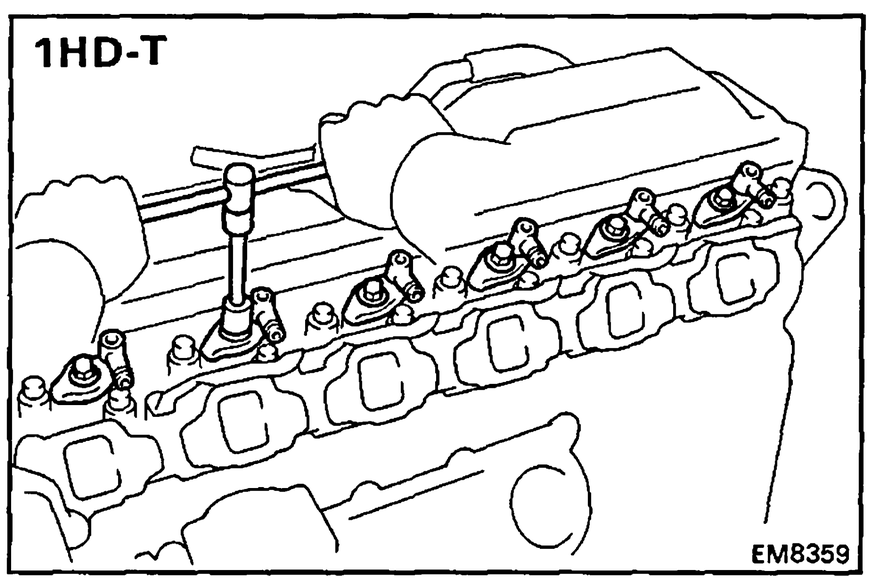

(1HD-T)

(a) Remove the bolt, washer, nozzle holder, injection nozzle and seat.

(b) Remove the O-ring from the injection nozzle.

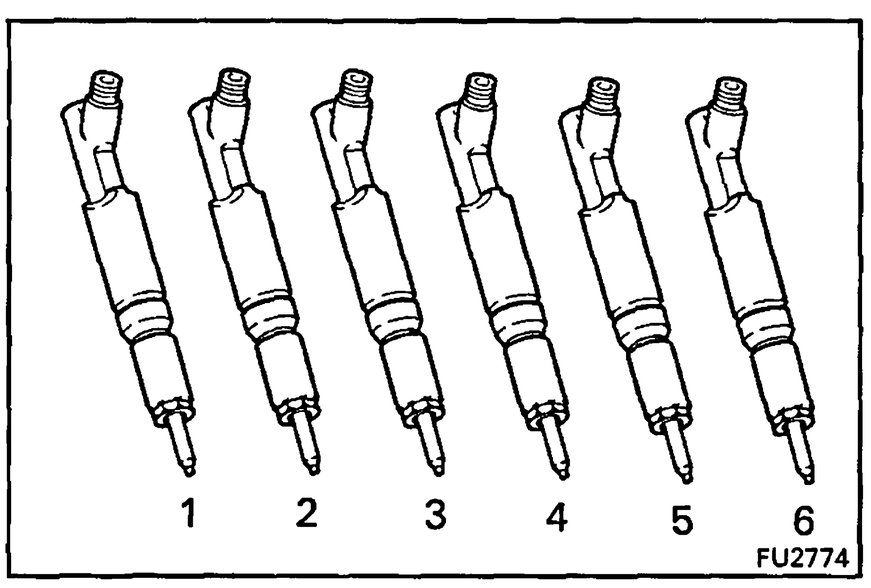

HINT: Arrange the injection nozzles in correct order.

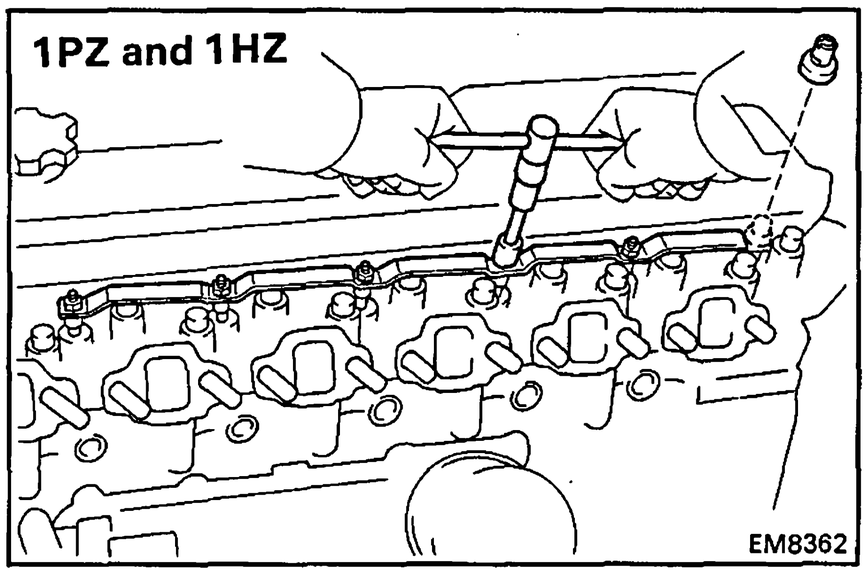

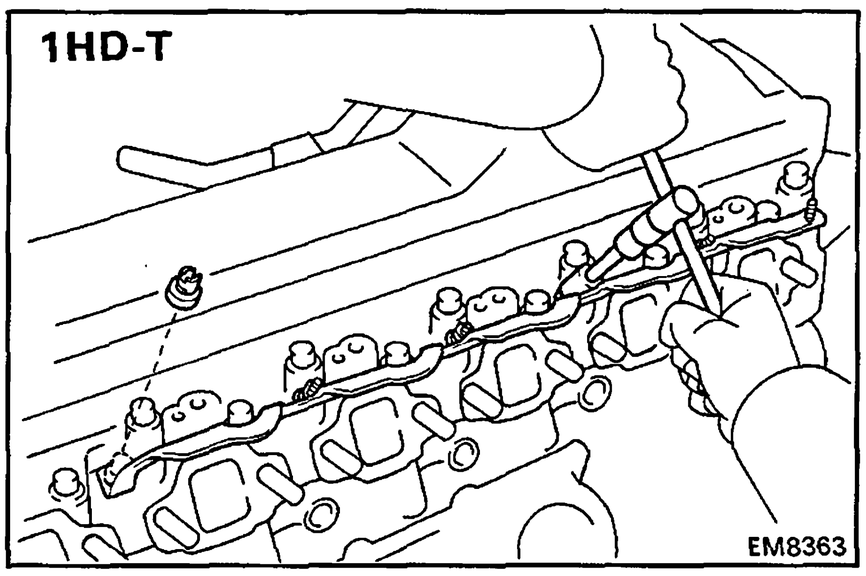

9. REMOVE GLOW PLUGS

(a) Remove the five screw grommets (1PZ) or six screw grommets (1HZ and 1HD-T).

(b) Remove the five nuts (1PZ) or six nuts (1HZ and 1HD-T) and glow plug connector.

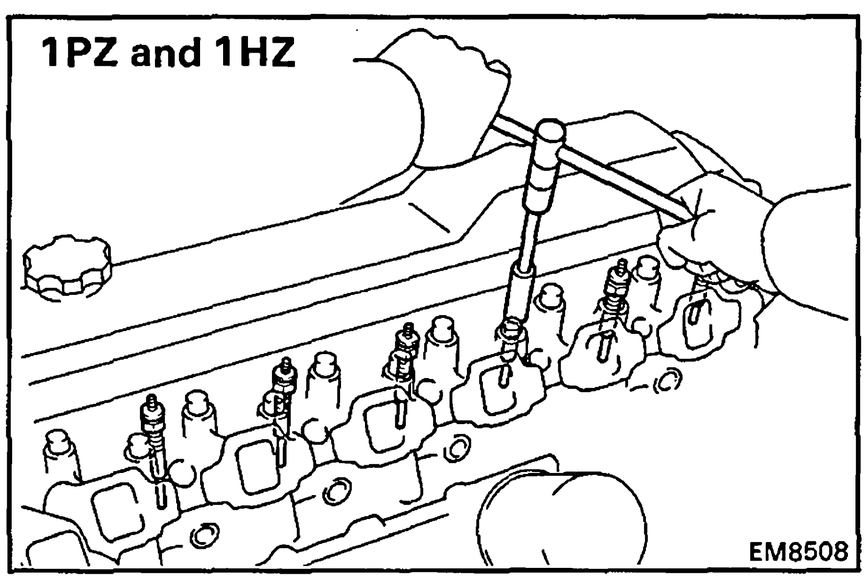

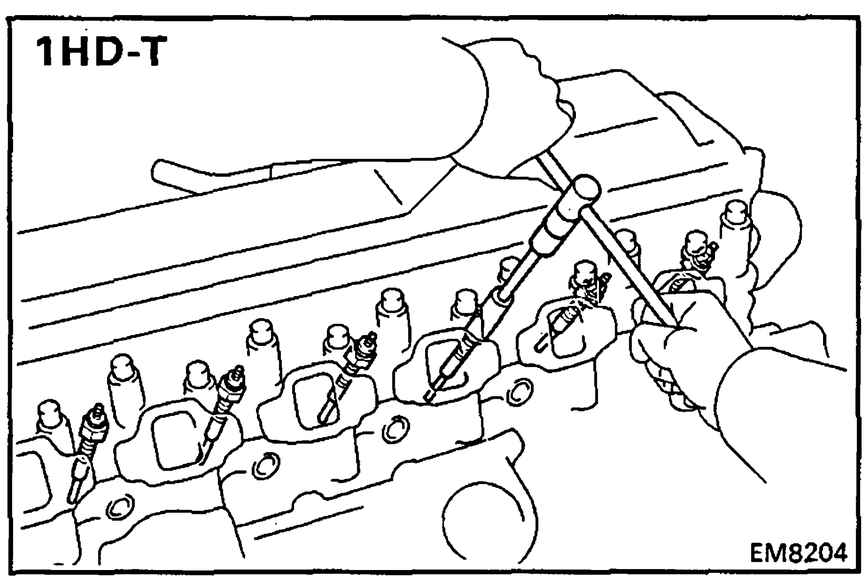

(c) Using a 12 mm deep socket wrench, remove the five glow plugs (1PZ) or six glow plugs (1HZ and 1HD-T).

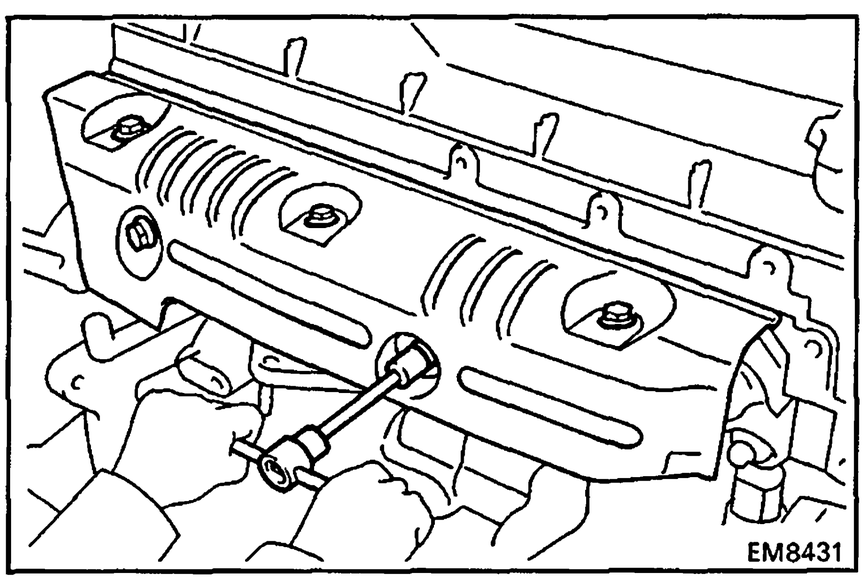

10. (1PZ and 1HZ)
REMOVE EXHAUST MANIFOLD

(a) Remove the four bolts (1PZ) or five bolts (1HZ) and heat insulator.

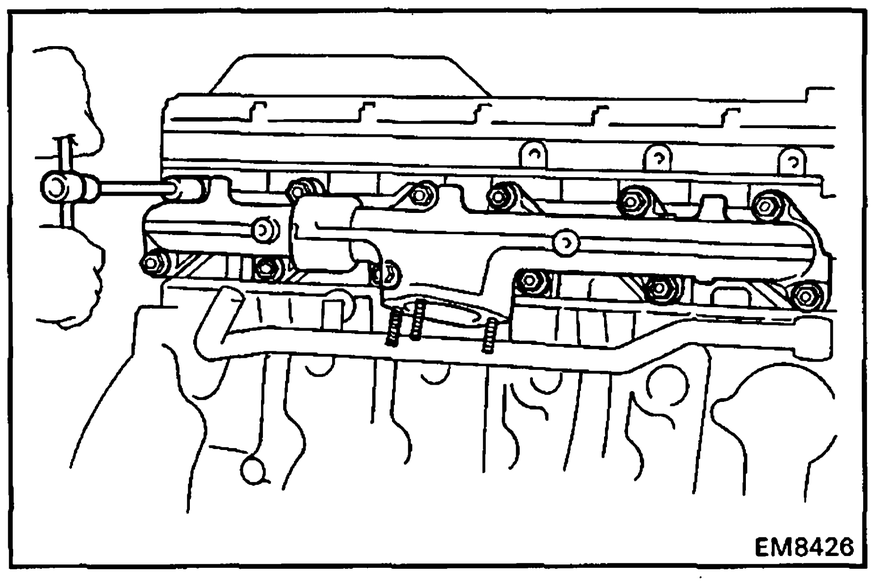

(b) Remove the ten nuts (1PZ) or twelve nuts (1HZ), exhaust manifold and two gaskets.

11. (1HD-T)
REMOVE TURBOCHARGER AND EXHAUST MANIFOLD ASSEMBLY
(See steps 3 to 8 on pages TC-9, 10)

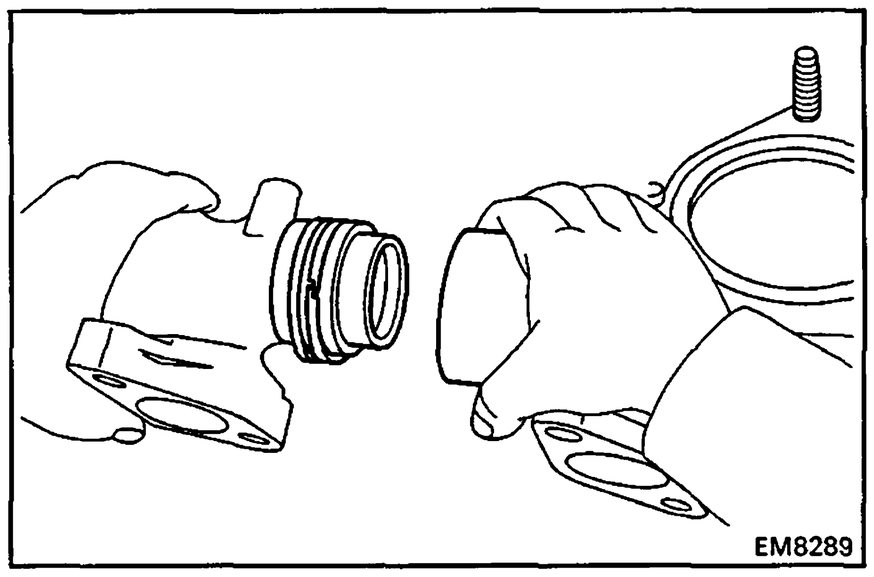

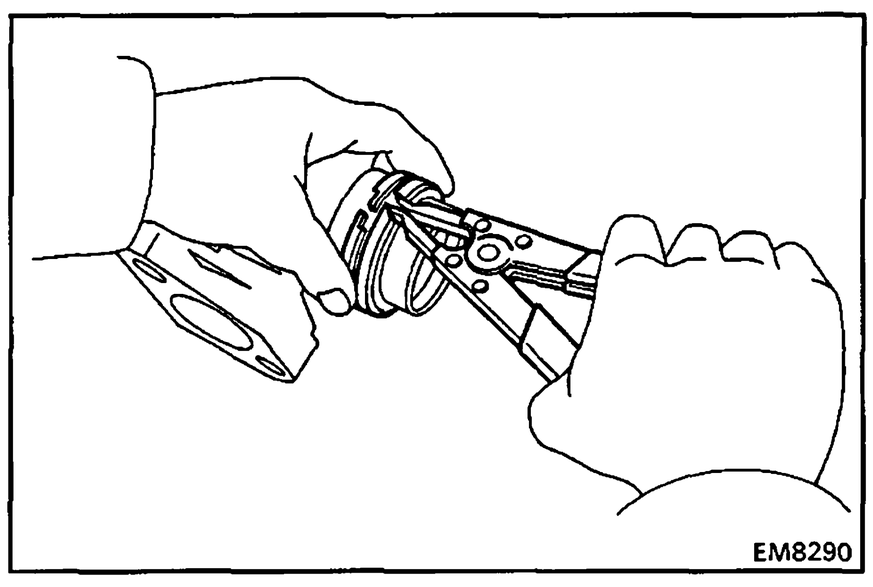

12. (1HZ and 1HD-T)
SEPARATE EXHAUST MANIFOLDS

(a) Separate the front and rear exhaust manifolds.

(b) Using snap ring pliers, remove the two manifold rings.

13. REMOVE TIMING BELT AND PULLEYS
(See steps 1 to 3 and 5 to 7 on pages EM-33 to 35)

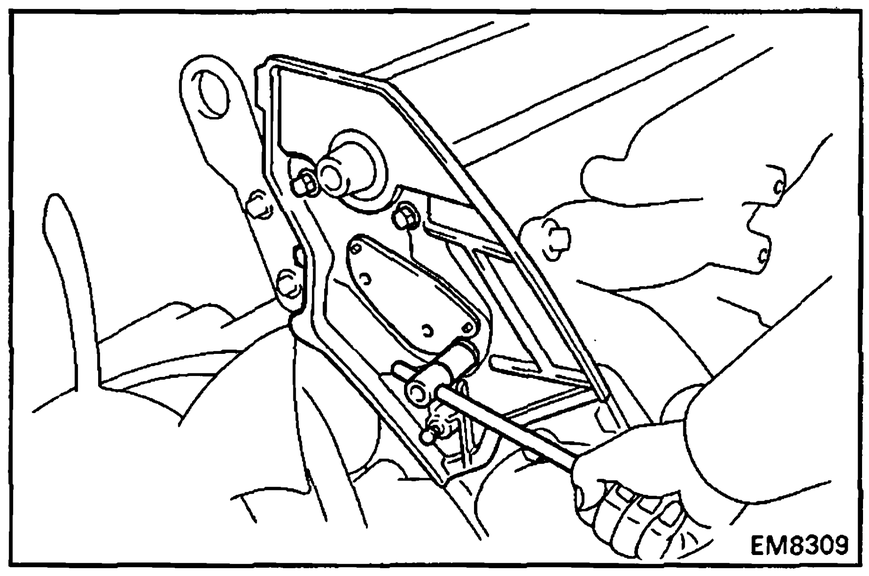

14. REMOVE CAMSHAFT OIL SEAL RETAINER

(a) Remove the four bolts holding the camshaft oil seal retainer to the cylinder head.

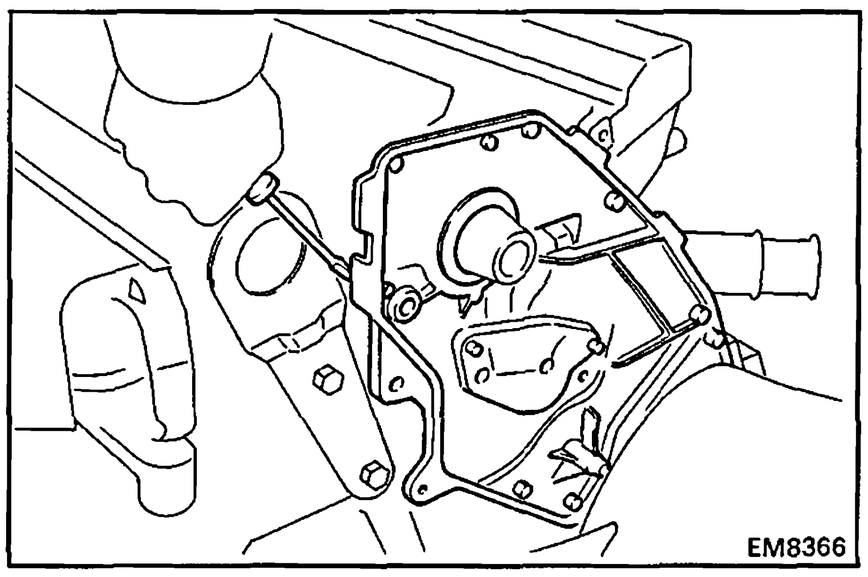

(b) Pry out the camshaft oil seal retainer.

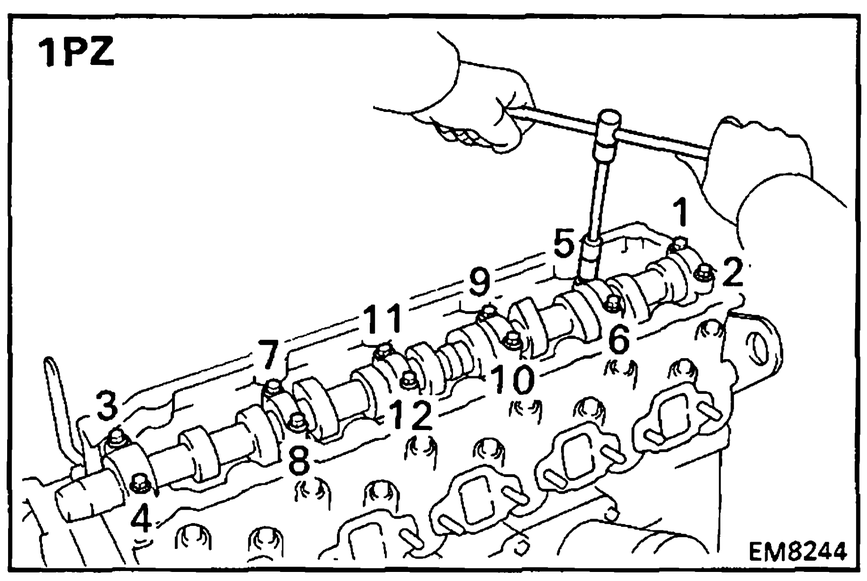

15. REMOVE CAMSHAFT

(a) (1PZ)
Uniformly loosen and remove the twelve bearing cap bolts in several passes in the sequence shown.

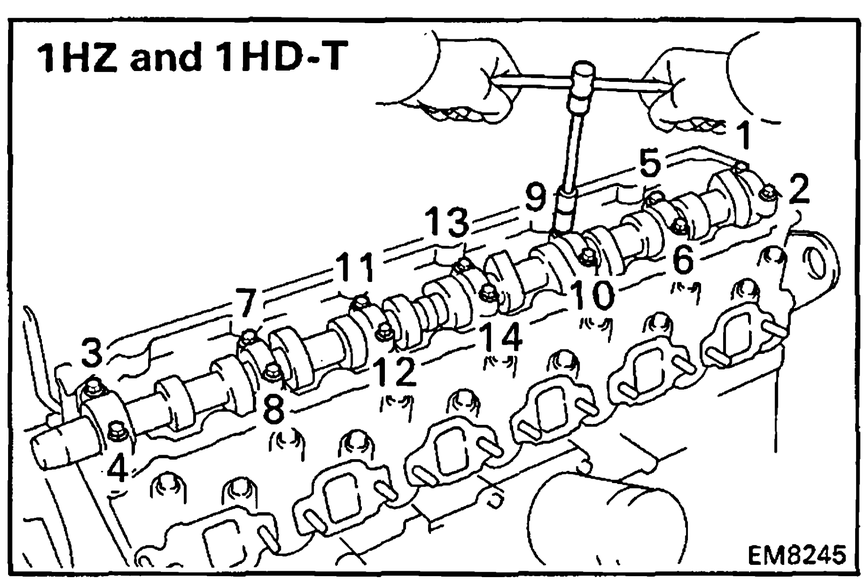

(b) (1HZ and 1HD-T)
Uniformly loosen and remove the fourteen bearing cap bolts in several passes in the sequence shown.

(c) Remove the six bearing caps (1PZ) or seven bearing caps (1HZ and 1HD-T) and camshaft.

(d) Remove the two bearings from the No.1 bearing cap and No.1 journal of the cylinder head.

(e) Remove the camshaft thrust plate.

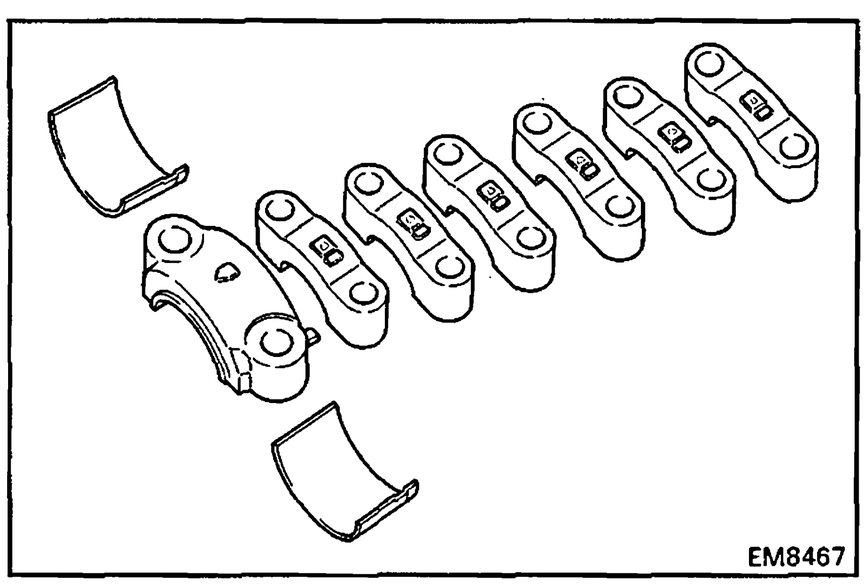

HINT: Arrange the bearing caps and bearings in correct order.

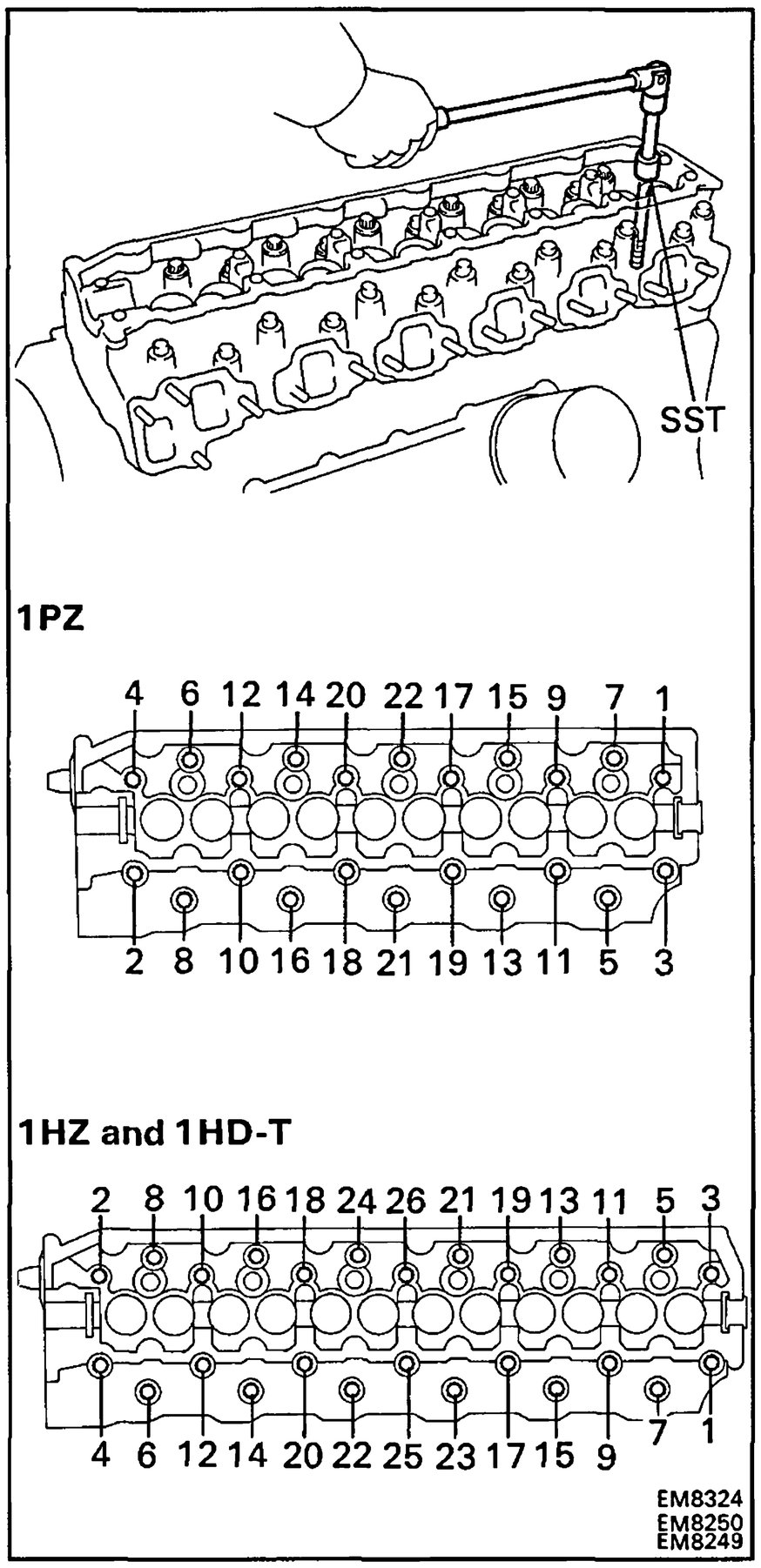

16. REMOVE CYLINDER HEAD

(a) Using SST, uniformly loosen and remove the twenty-two cylinder head bolts (1PZ) or twenty-six cylinder head bolts (1HZ and 1HD-T) in several passes in the sequence shown.

SST 09011-38121

NOTICE: Head warpage or cracking could result from removing bolts in incorrect order.

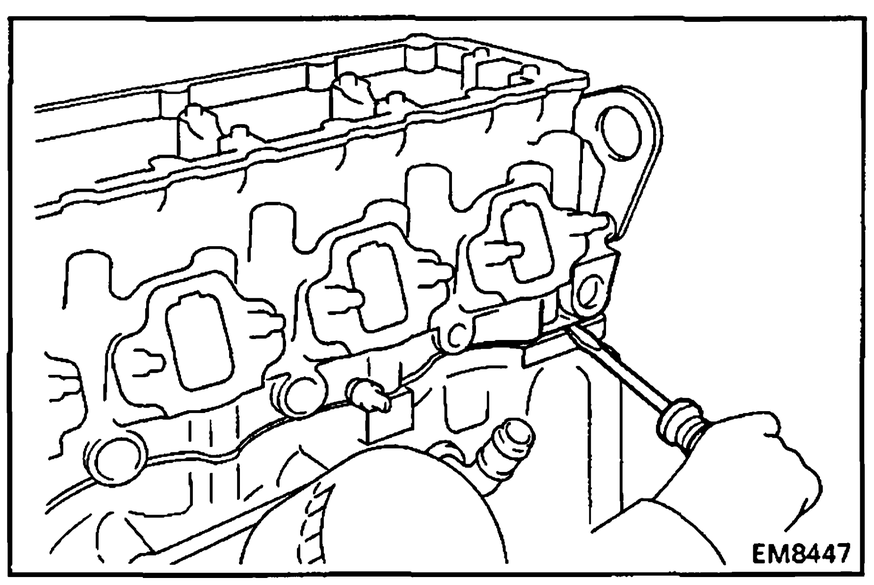

(b) Lift the cylinder head from the dowels on the cylinder block and place the head on wooden blocks on a bench.

HINT: If the cylinder head is difficult to lift off, pry with a screwdriver between the cylinder head and block.

NOTICE: Be careful not to damage the cylinder head and cylinder block surfaces of cylinder head gasket side.

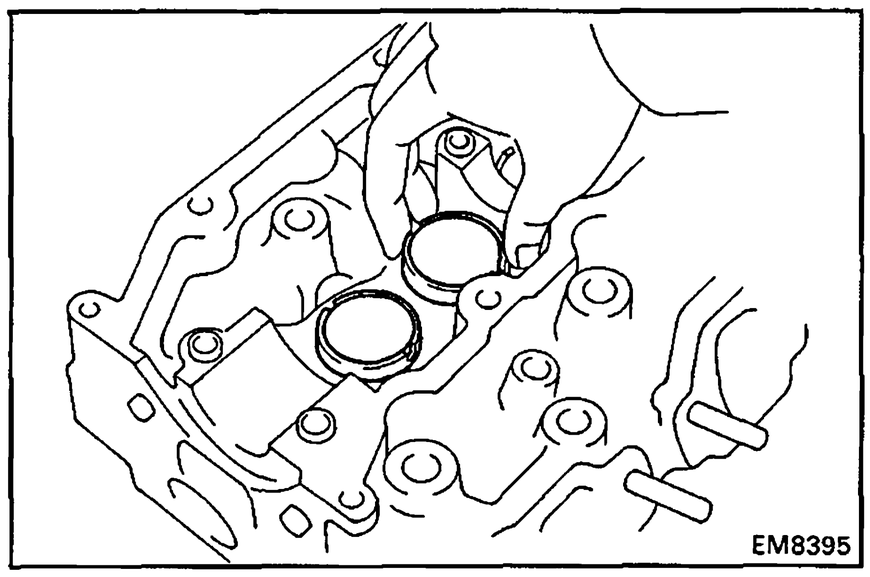

DISASSEMBLY OF CYLINDER HEAD

(See page EM-54)

1. REMOVE VALVE LIFTERS AND SHIMS

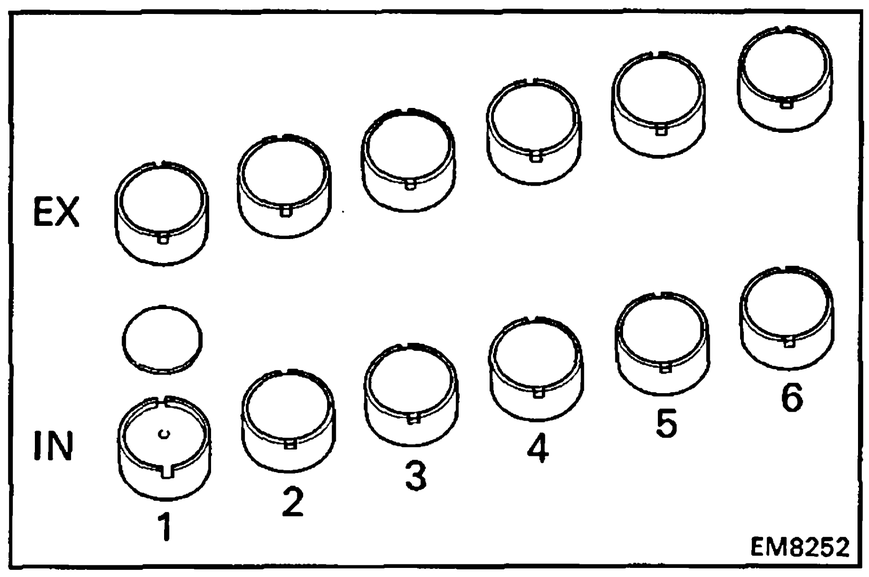

HINT: Arrange the valve lifters and shims in correct order.

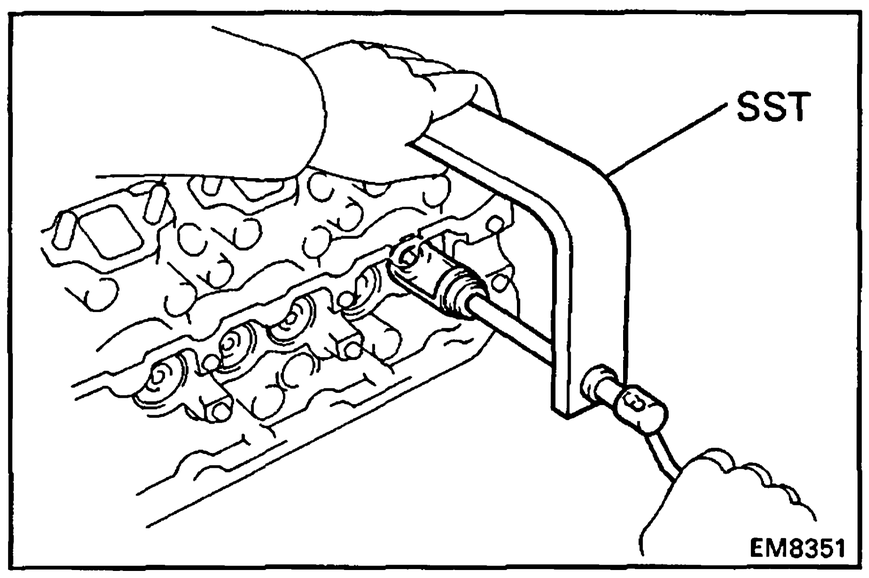

2. REMOVE VALVES

(a) Using SST, compress the valve spring and remove the two keepers.

SST 09202-43013

(b) Remove the spring retainer, valve spring, valve and spring seat.

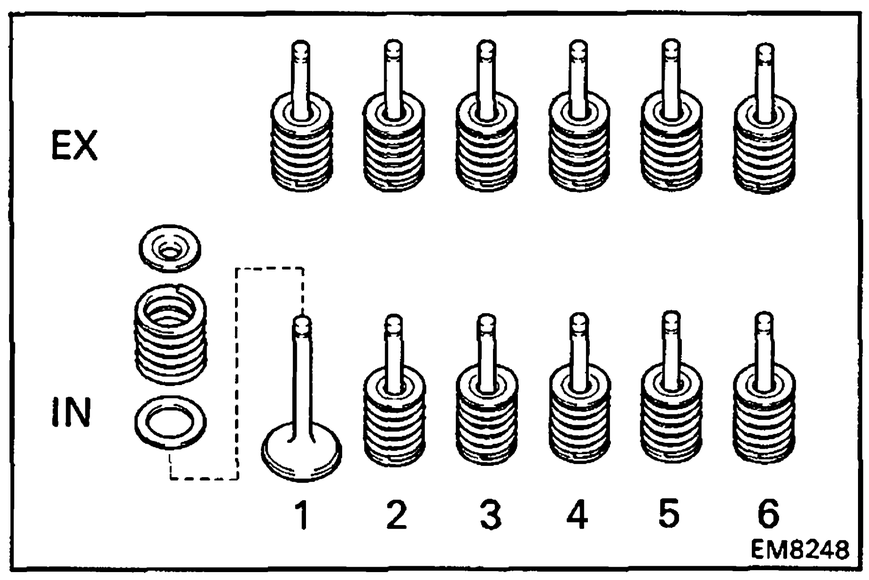

HINT: Arrange the valves, valve springs, spring seats and spring retainers in correct order.

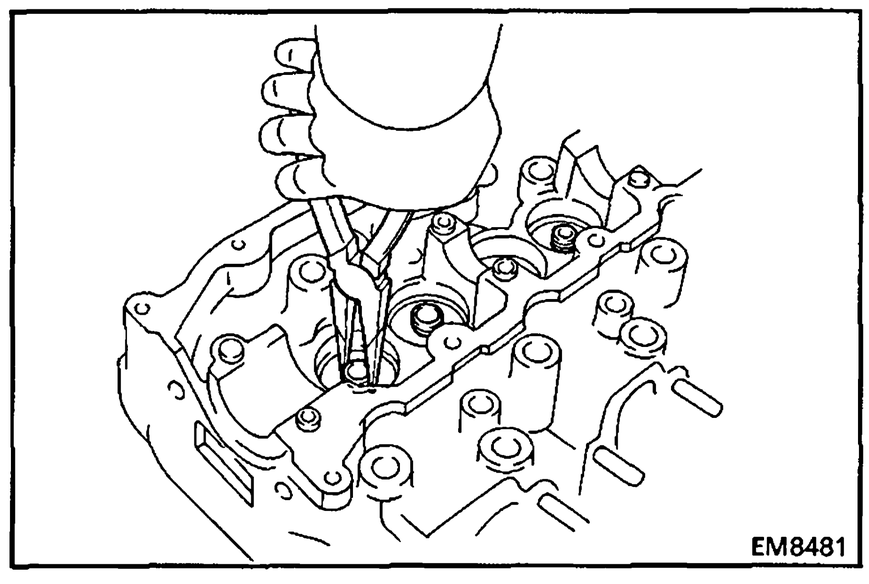

(c) Using needle-nose pliers, remove the oil seal.

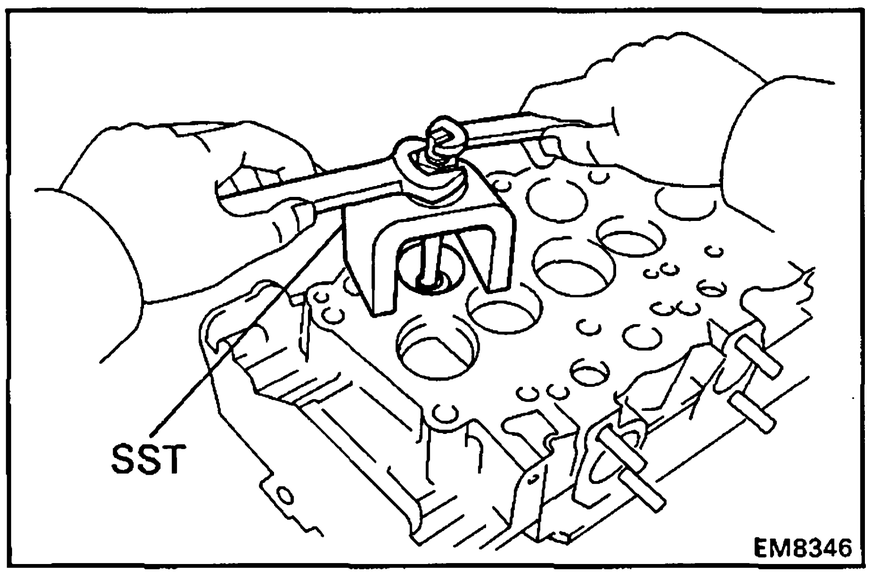

3. **(1PZ and 1HZ)**
REMOVE COMBUSTION CHAMBERS

Using SST, remove the five (1PZ) and six (1HZ) combustion chambers (and shims).

SST 09208-48010

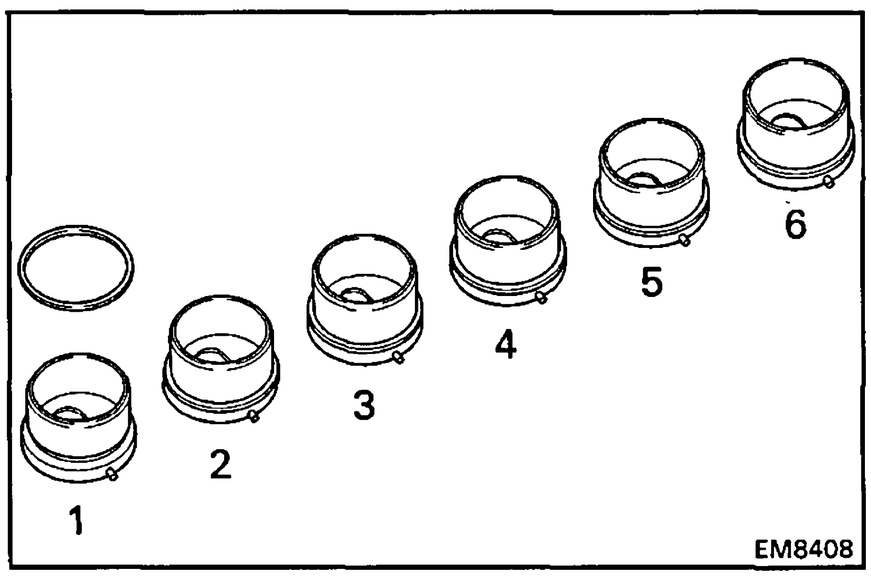

HINT: Arrange the combustion chambers (and shims) in correct order.

4. **REMOVE HALF CIRCULAR PLUG**

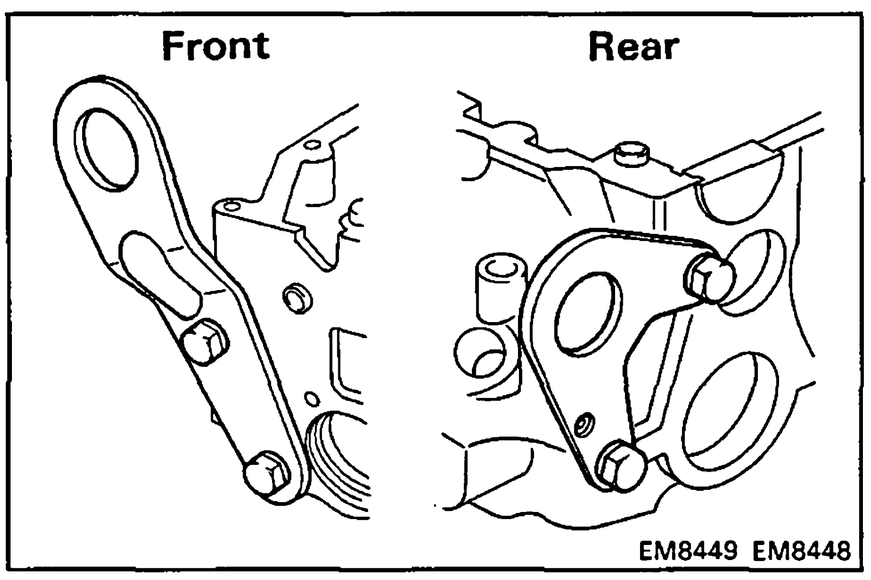

5. **REMOVE FRONT AND REAR ENGINE HANGERS**

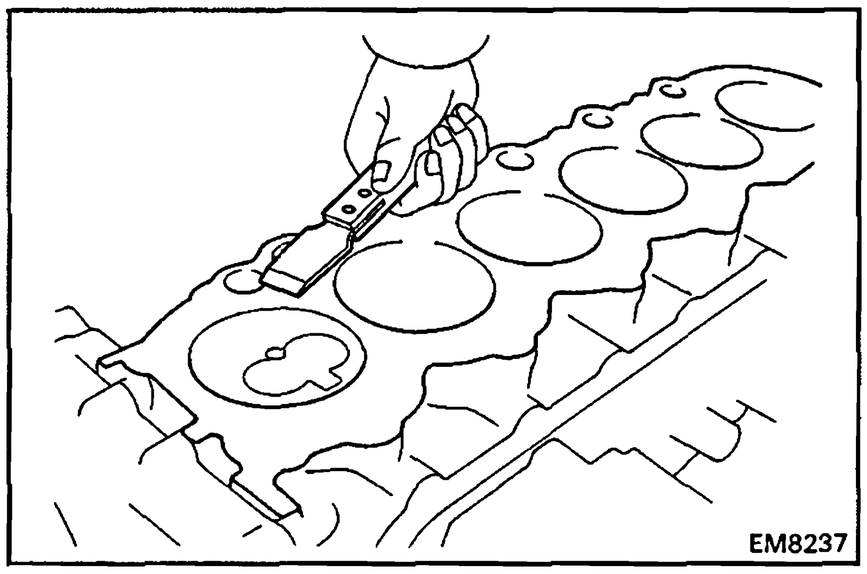

INSPECTION, CLEANING AND REPAIR OF CYLINDER HEAD COMPONENTS

1. CLEAN TOP OF PISTONS AND TOP OF BLOCK

(a) Turn the crankshaft and bring each piston to top dead center (TDC). Using a gasket scraper, remove all the carbon from the piston top.

(b) Remove all the gasket material from the top of the cylinder block.

NOTICE: Be careful not to scratch the surfaces.

(c) Using compressed air, blow carbon and oil from the bolt holes.

CAUTION: Protect your eyes when using high pressure air.

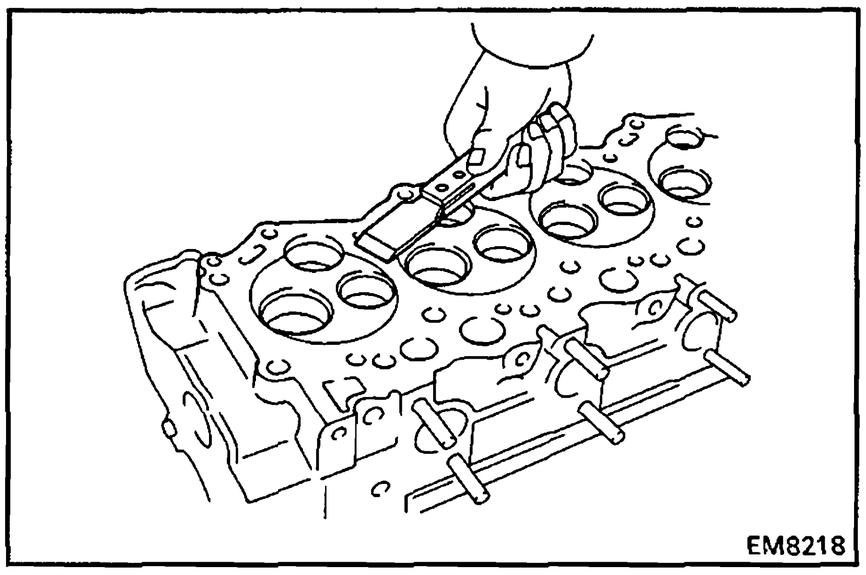

2. REMOVE GASKET MATERIAL

Using a gasket scraper, remove all the gasket material from the manifold and cylinder head surface.

NOTICE: Be careful not to scratch the surfaces.

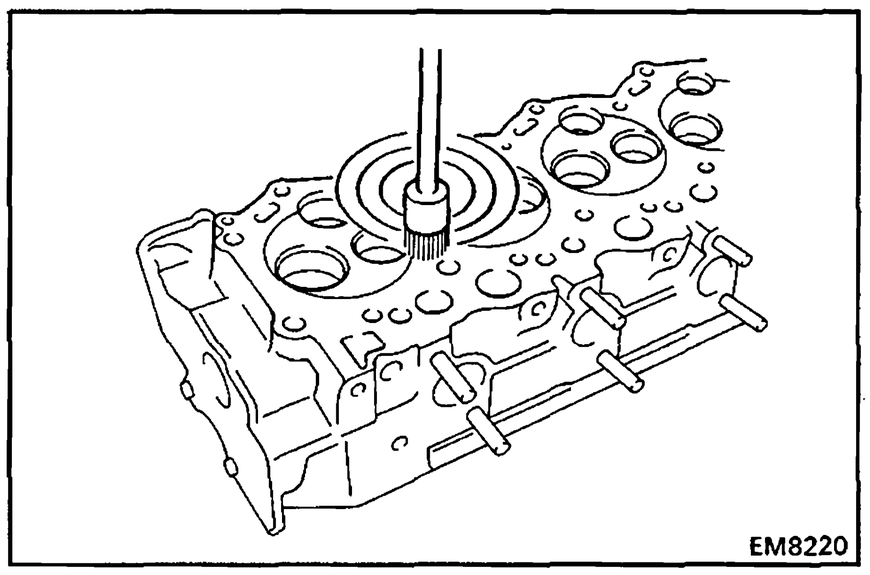

3. CLEAN COMBUSTION CHAMBERS

Using a wire brush, remove all the carbon from the combustion chambers.

NOTICE: Be careful not to scratch the head gasket contact surface.

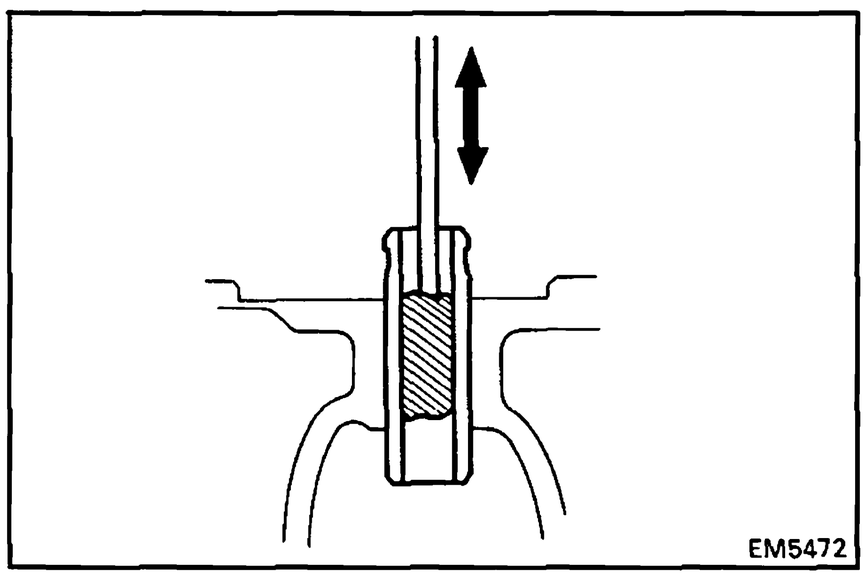

4. CLEAN VALVE GUIDE BUSHINGS

Using a valve guide bushing brush and solvent, clean all the guide bushings.

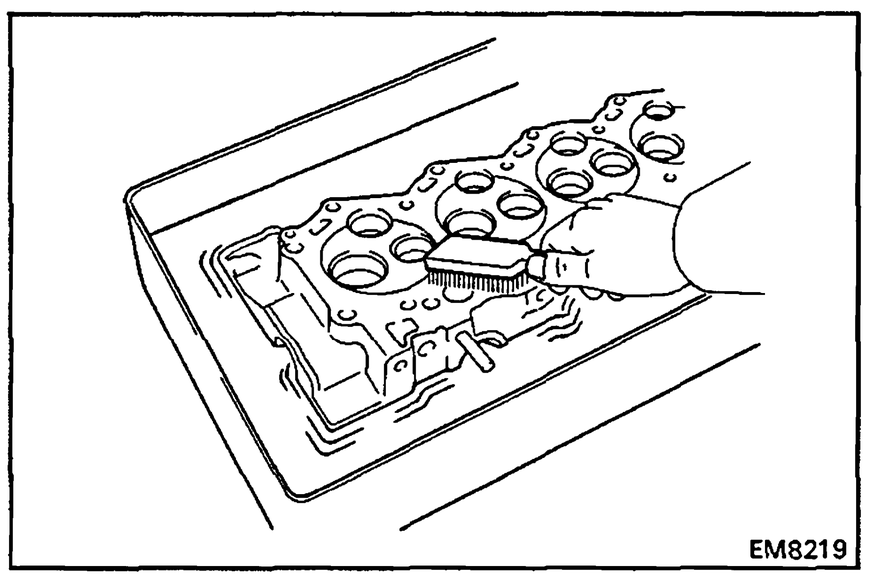

5. CLEAN CYLINDER HEAD

Using a soft brush and solvent, thoroughly clean cylinder heads.

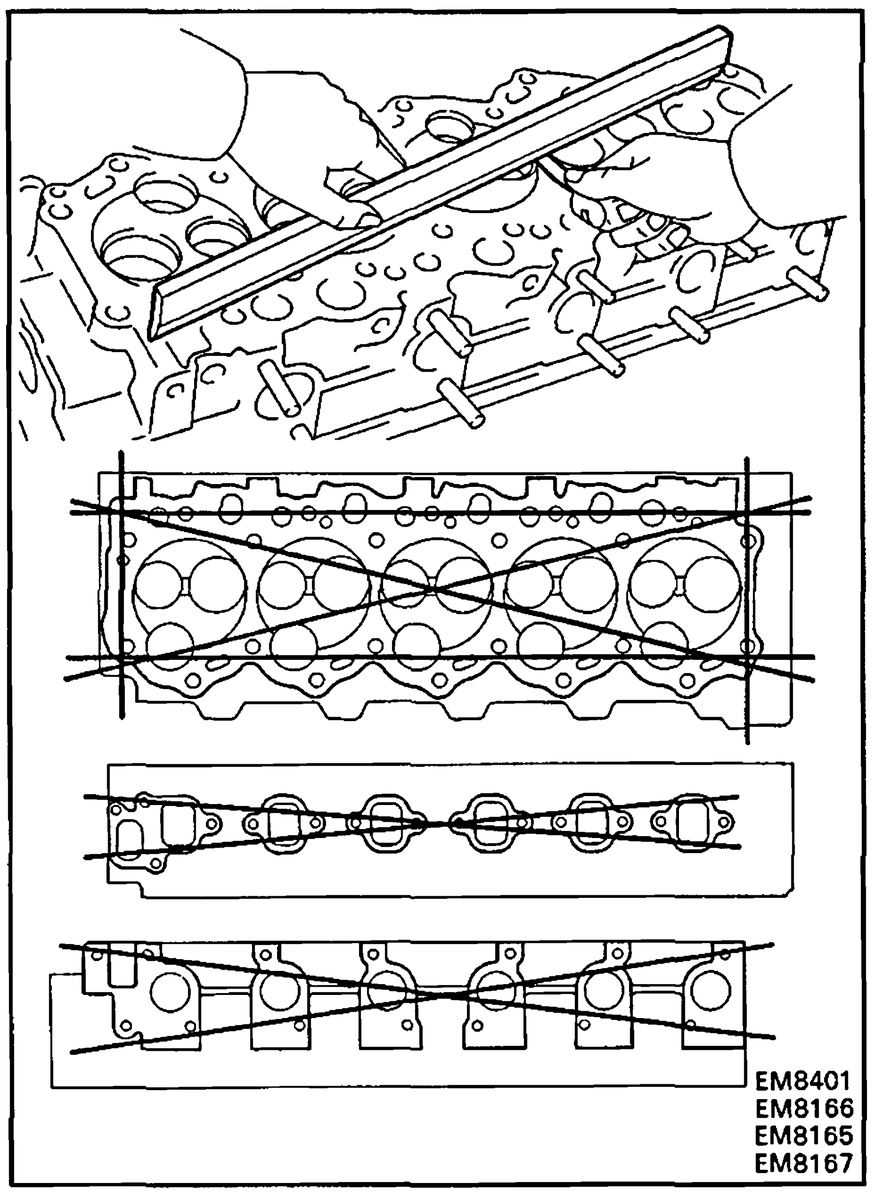

6. INSPECT CYLINDER HEAD FOR FLATNESS

Using a precision straight edge and thickness gauge, measure the surfaces contacting the cylinder block manifolds for warpage.

Maximum warpage: 0.20 mm (0.0079 in.)

If warpage is greater than maximum, replace the cylinder head.

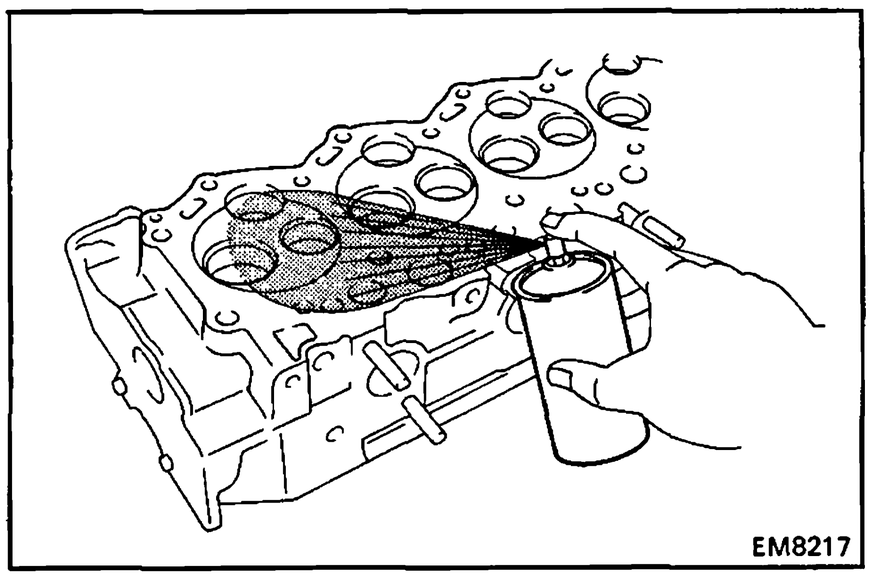

7. INSPECT CYLINDER HEAD FOR CRACKS

Using a dye penetrant, check the combustion chamber, intake and exhaust ports, head surface and the top of the head for cracks.

If cracked, replace the cylinder head.

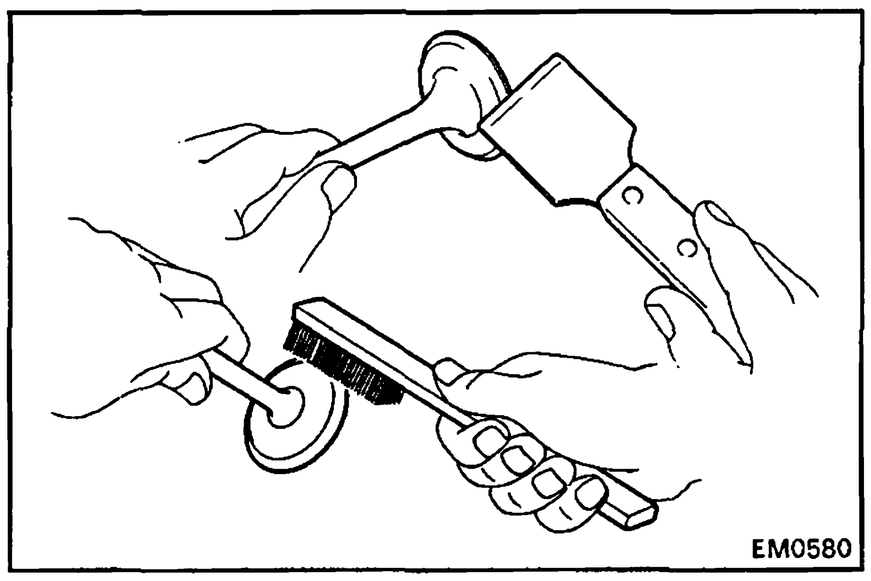

8. CLEAN VALVES

(a) Using a gasket scraper, chip any carbon from the valve head.

(b) Using a wire brush, thoroughly clean the valve.

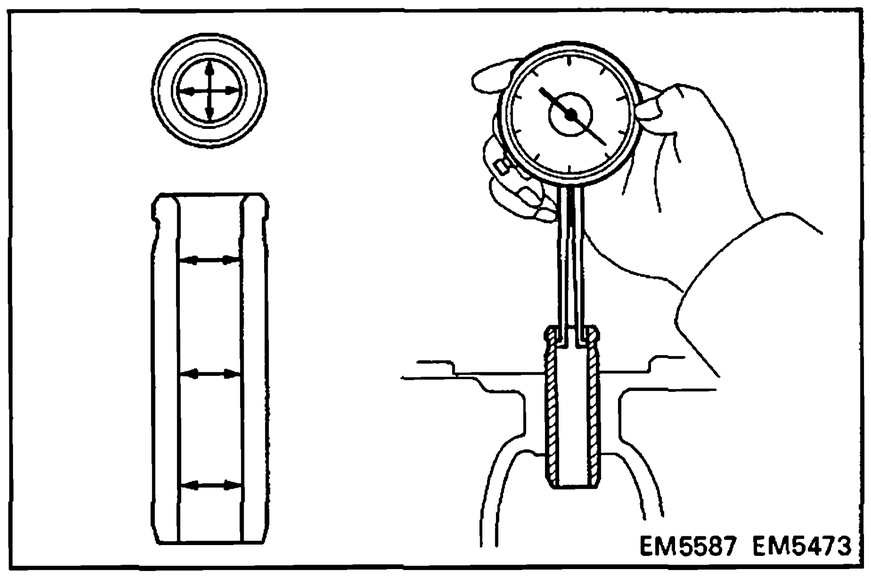

9. INSPECT VALVE STEMS AND GUIDE BUSHINGS

(a) Using a caliper gauge, measure the inside diameter of the guide bushing.

Bushing inside diameter:
8.010 – 8.030 mm (0.3154 – 0.3161 in.)

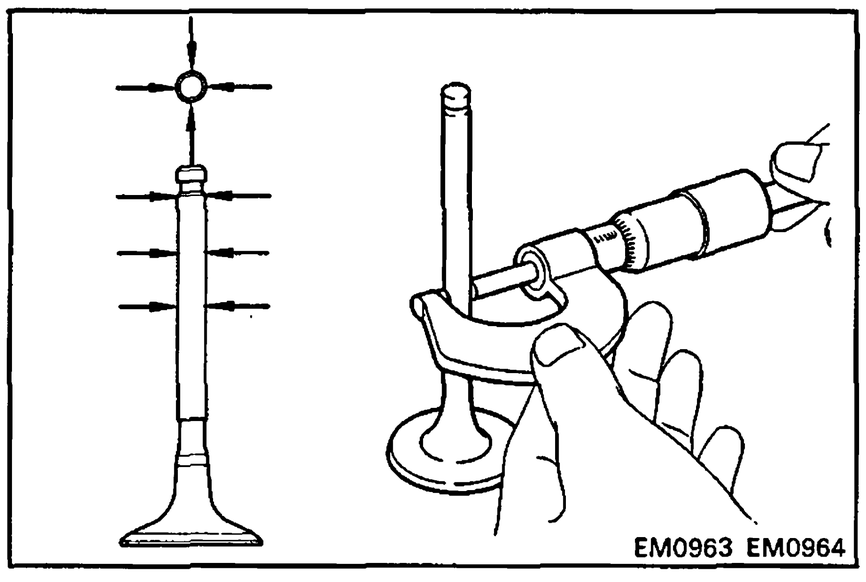

(b) Using a micrometer, measure the diameter of the valve stem.

Valve stem diameter:

Intake	**7.975 – 7.990 mm (0.3140 – 0.3146 in.)**
Exhaust	**7.960 – 7.975 mm (0.3134 – 0.3140 in.)**

(c) Subtract the valve stem diameter measurement from the guide bushing inside diameter measurement.

Standard oil clearance:

Intake	**0.020 – 0.055 mm (0.0008 – 0.0022 in.)**
Exhaust	**0.035 – 0.070 mm (0.0014 – 0.0028 in.)**

Maximum oil clearance:

Intake	**0.08 mm (0.0031 in.)**
Exhaust	**0.10 mm (0.0039 in.)**

If the clearance is greater than maximum, replace the valve and guide bushing.

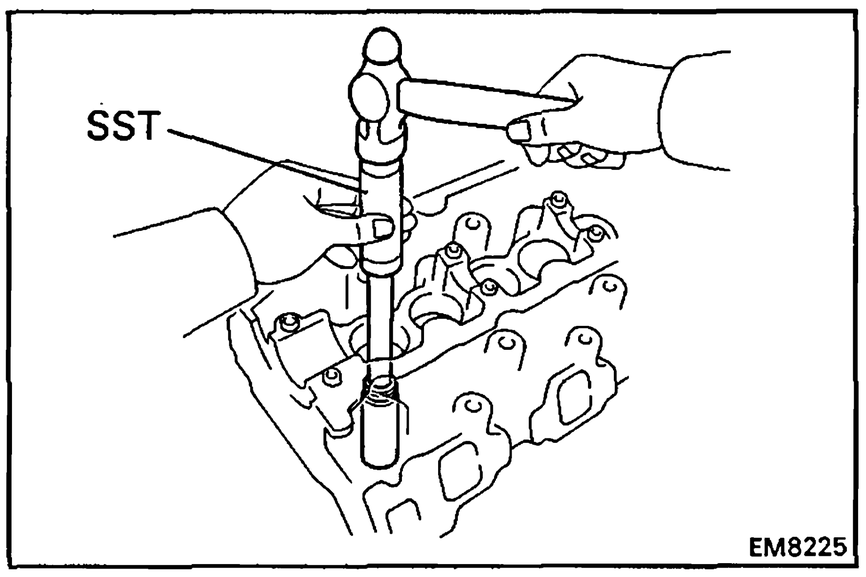

10. IF NECESSARY, REPLACE VALVE GUIDE BUSHINGS

(a) Using SST and a hammer, tap out the guide bushing.

SST 09201-60011

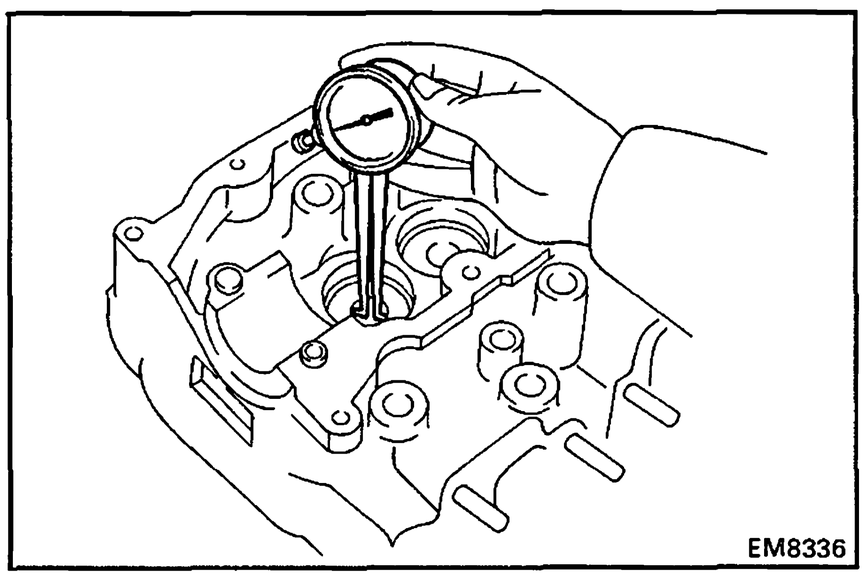

(b) Using a caliper gauge, measure the bushing bore diameter of the cylinder head.

Bushing bore diameter mm (in.)	Bushing size
13.004 – 13.025 (0.5112 – 0.5128)	Use STD
13.054 – 13.075 (0.5139 – 0.5148)	Use O/S 0.05

(c) Select a new guide bushing (STD size or O/S 0.05).

If the bushing bore diameter of the cylinder head is greater than 13.025 mm (0.5128 in.), machine the bushing bore to the following dimension:

Rebored cylinder head bushing bore dimension:
13.054 – 13.075 mm (0.5139 – 0.5148 in.)

If the bushing bore diameter of the cylinder head is greater than 13.075 mm (0.5148 in.), replace the cylinder head.

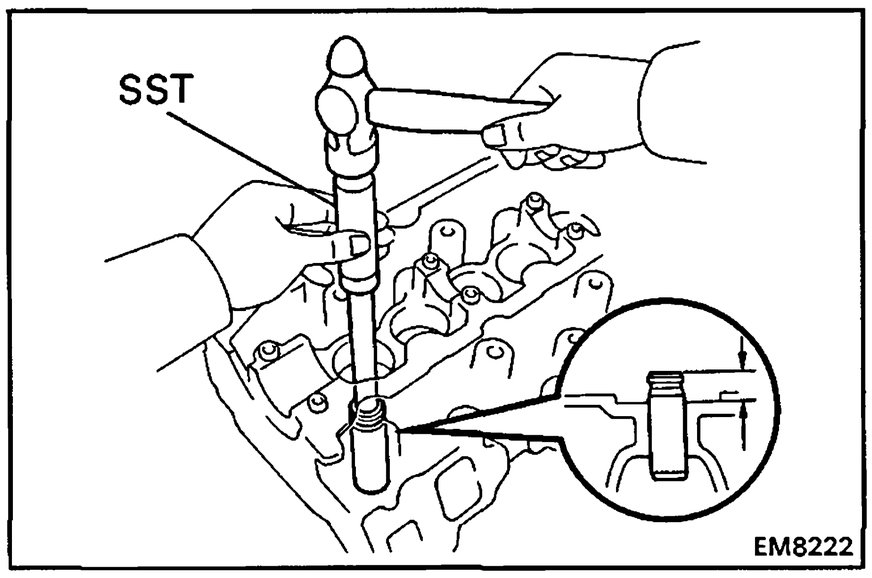

(d) Using SST and a hammer, tap in a new guide bushing to where there is 11.8 – 12.2 mm (0.465 – 0.480 in.) protruding from the cylinder head.

SST 09201-60011

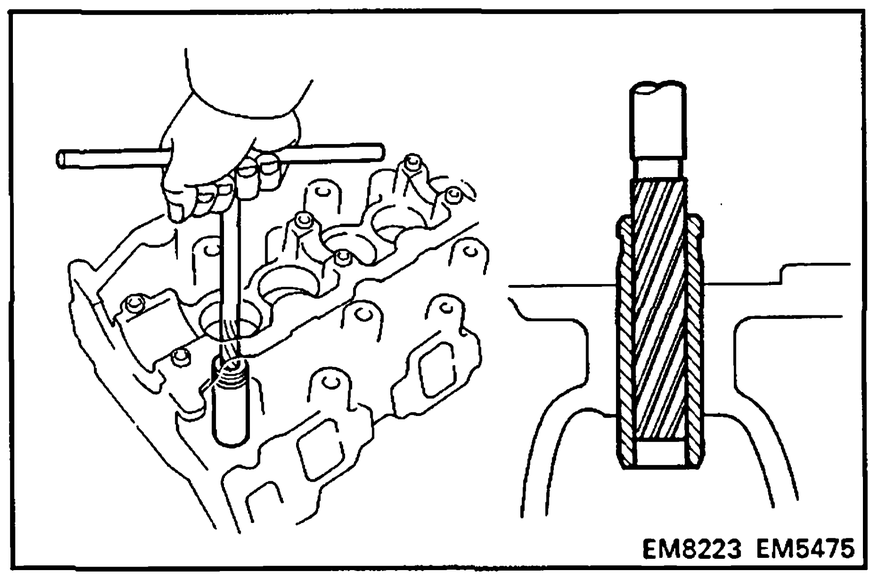

(e) Using a sharp 8 mm reamer, ream the guide bushing to obtain the standard specified clearance (See page EM-65) between the guide bushing and valve stem.

11. INSPECT AND GRIND VALVES

(a) Grind the valve enough to remove pits and carbon.

(b) Check that the valve is ground to the correct valve face angle.

Valve face angle: 44.5°

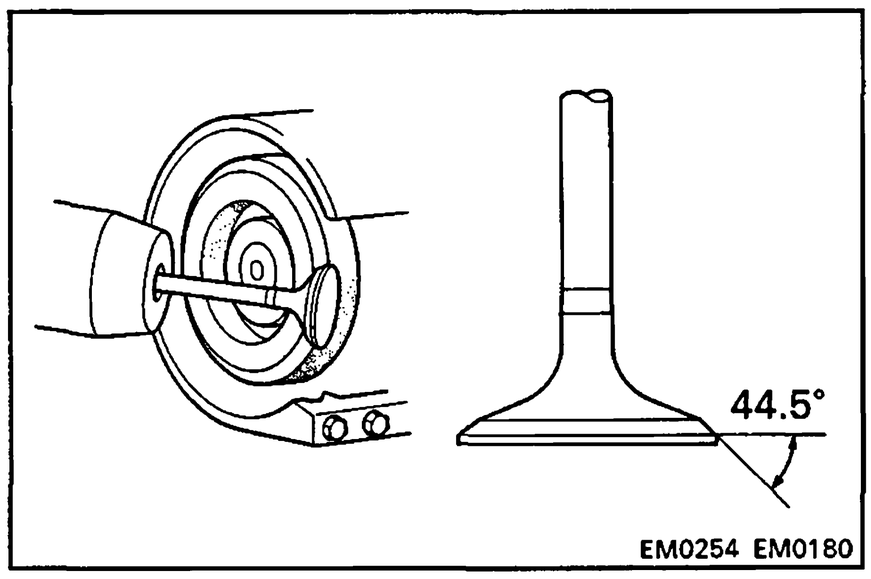

(c) Check the valve head margin thickness.

Standard margin thickness:

Intake	**1.6 mm (0.063 in.)**
Exhaust	**1.7 mm (0.067 in.)**

Minimum margin thickness:

Intake	**1.1 mm (0.043 in.)**
Exhaust	**1.2 mm (0.047 in.)**

If the margin thickness is less than minimum, replace the valve.

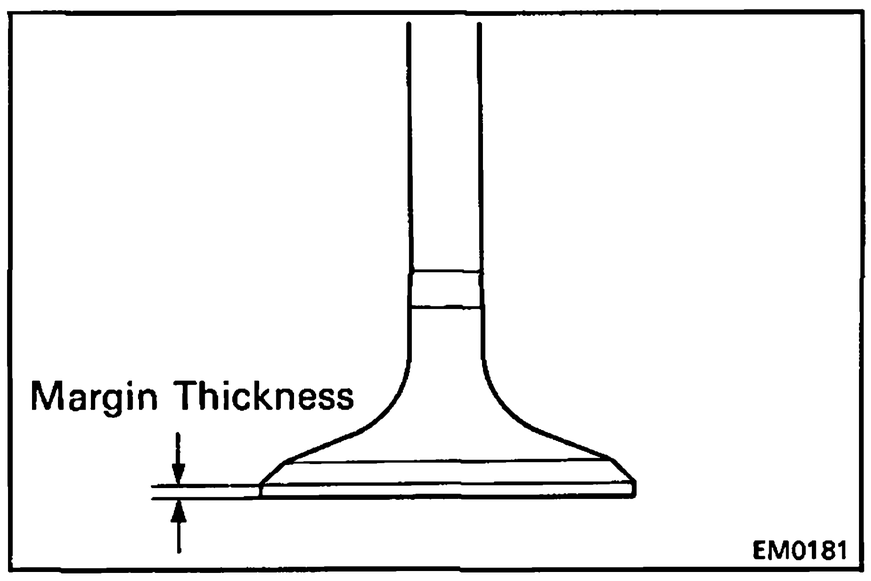

(d) Check the valve overall length.

Standard overall length:

Intake	**103.29 – 103.69 mm (4.0665 – 4.0823 in.)**
Exhaust	**103.14 – 103.54 mm (4.0606 – 4.0764 in.)**

Minimum overall length:

Intake	**102.79 mm (4.0468 in.)**
Exhaust	**102.64 mm (4.0409 in.)**

If the overall length is less than minimum, replace the valve.

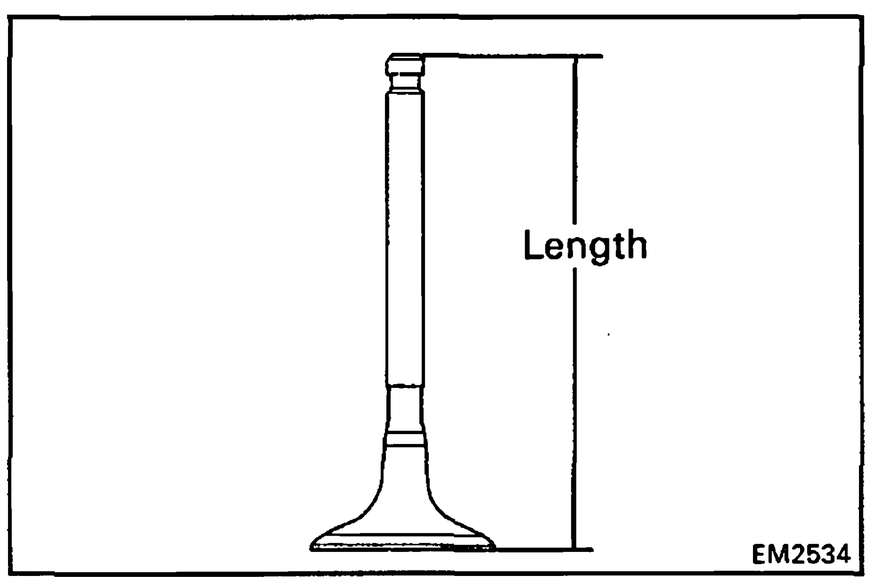

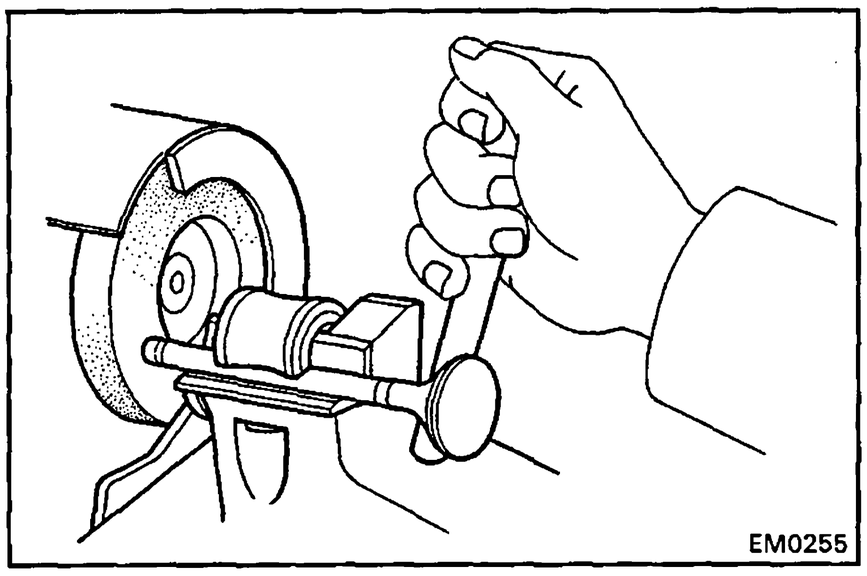

(e) Check the surface of the valve stem tip for wear.

If the valve stem tip is worn, resurface the tip with a grinder or replace the valve.

NOTICE: Do not grind off more than the minimum overall length.

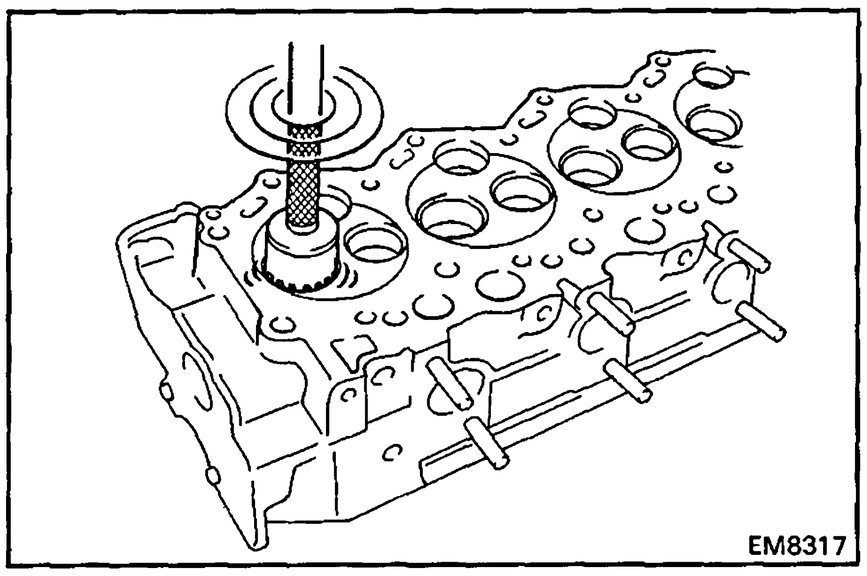

12. INSPECT AND CLEAN VALVE SEATS

(a) Using a 45° carbide cutter, resurface the valve seats. Remove only enough metal to clean the seats.

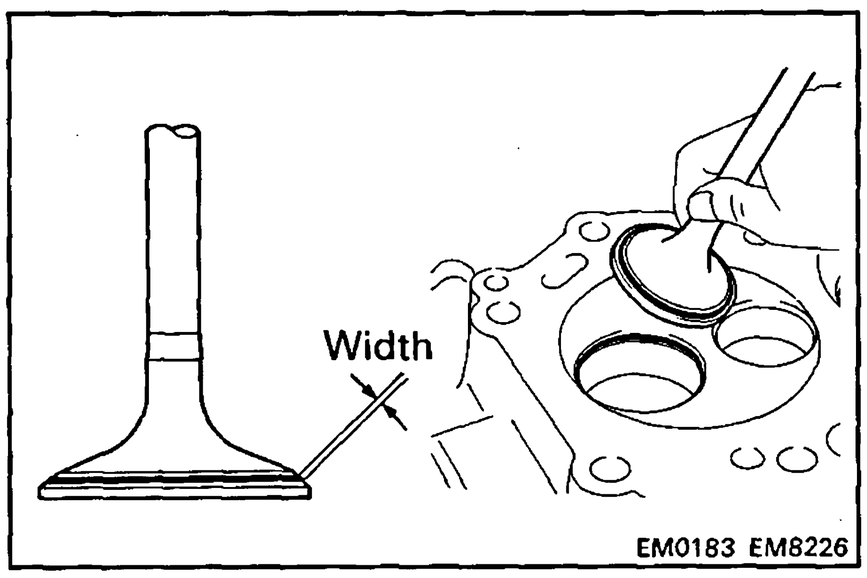

(b) Check the valve seating position. Apply a thin coat of prussian blue (or white lead) to the valve face. Lightly press the valve against the seat. Do not rotate the valve.

(c) Check the valve face and seat for the following:

- If blue appears 360° around the face, the valve is concentric. If not, replace the valve.
- If blue appears 360° around the valve seat, the guide and face are concentric. If not, resurface the seat.
- Check that the seat contact is on the middle of the valve face with the following width:

Intake 1.5 – 1.9 mm (0.059 – 0.075 in.)
Exhaust 1.8 – 2.2 mm (0.071 – 0.087 in.)

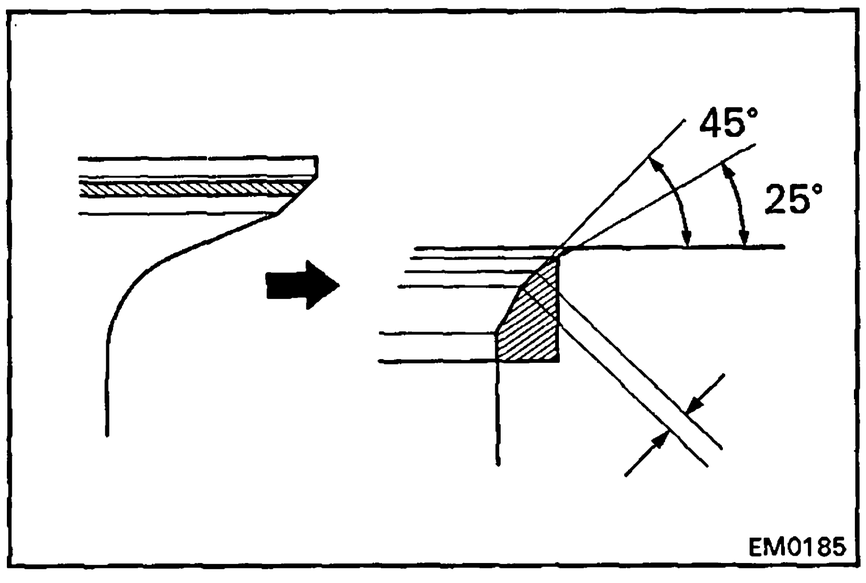

If not, correct the valve seats as follows:

(1) If the seating is too high on the valve face, use 25° and 45° cutters to correct the seat.

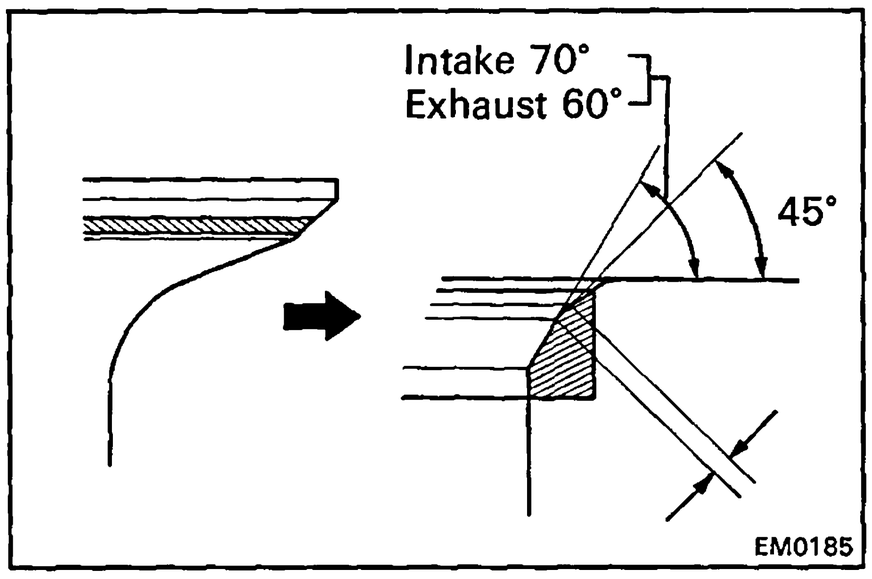

(2) (Intake)
If the seating is too low on the valve face, use 70° and 45° cutters to correct the seat.

(Exhaust)
If the seating is too low on the valve face, use 60° and 45° cutters to correct the seat.

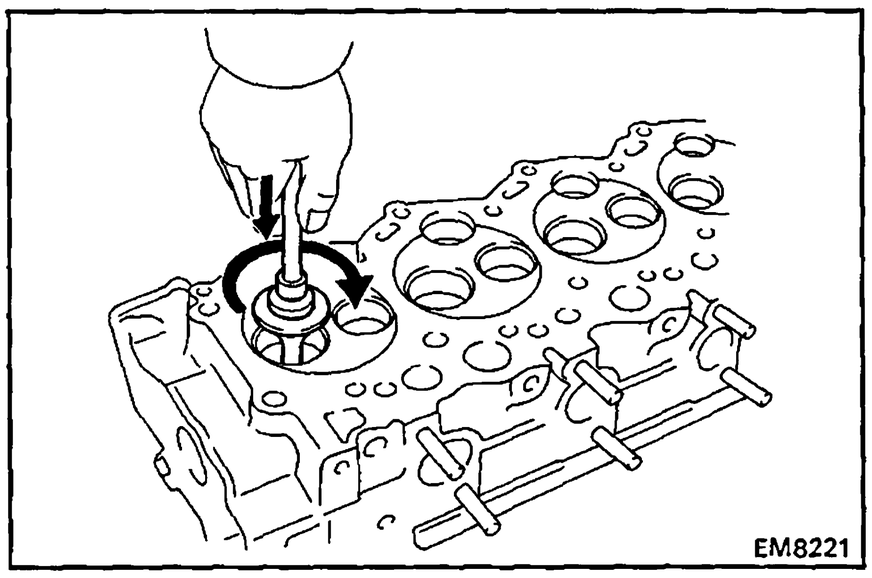

(d) Hand-lap the valve and valve seat with an abrasive compound.

(e) After hand-lapping, clean the valve and valve seat.

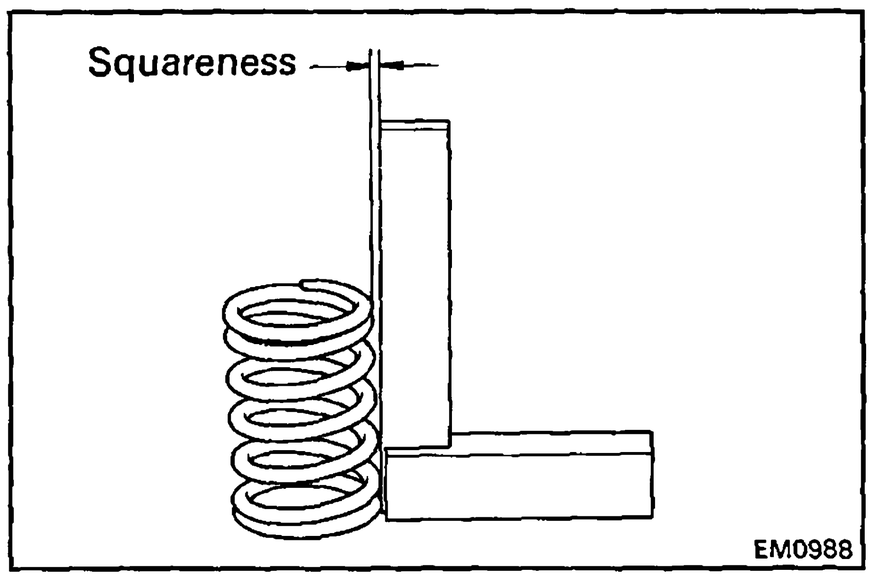

13. INSPECT VALVE SPRINGS

(a) Using a steel square, measure the squareness of the valve spring.

Maximum squareness: 2.0 mm (0.075 in.)

If squareness is greater than maximum, replace the valve spring.

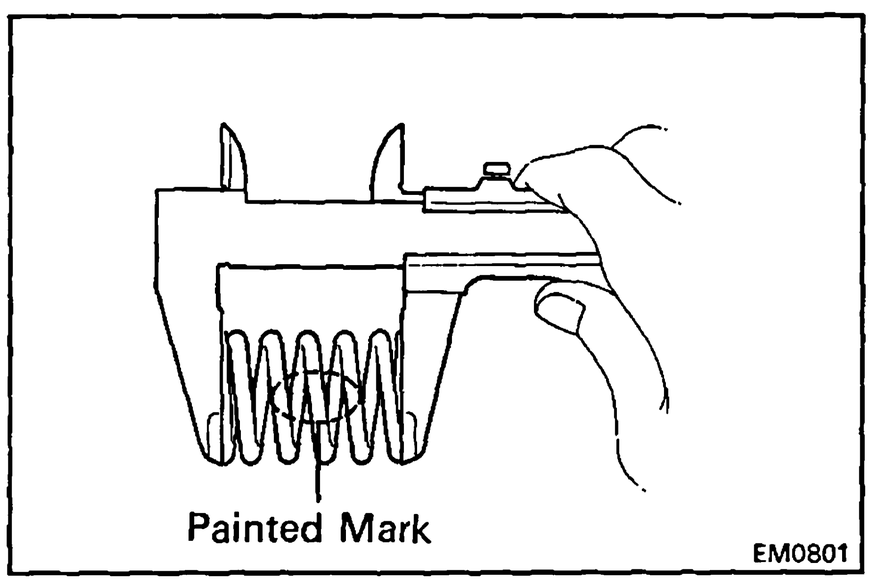

(b) Using vernier calipers, measure the free length of the valve spring.

Free length:

Yellow painted mark	**46.20 mm (1.8189 in.)**
Blue painted mark	**49.14 mm (1.9346 in.)**

If the free length is not as specified, replace the valve spring.

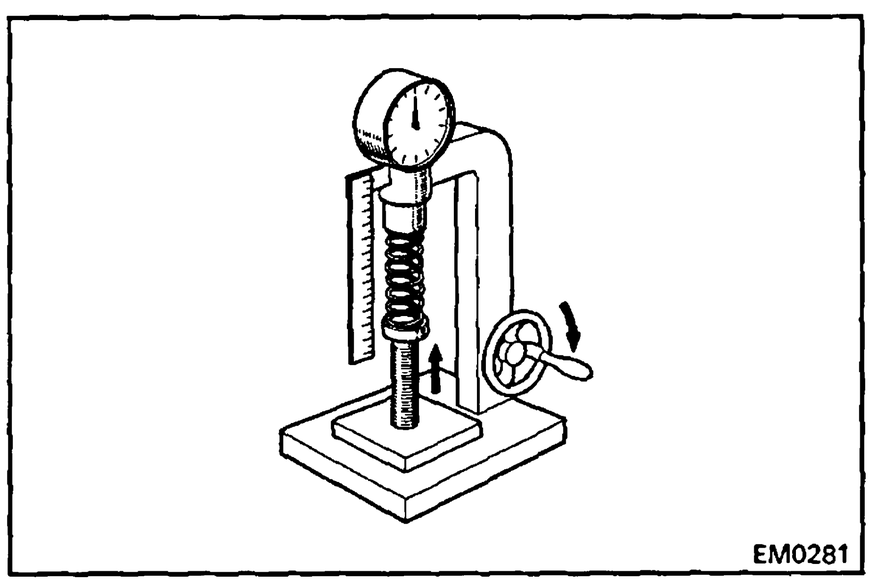

(c) Using a spring tester, measure the tension of the valve spring at the specified installed length.

Installed tension:
30.7 – 33.9 kg (67.7 – 74.7 lb, 301 – 332 N)
at 37.0 mm (1.457 in.)

If the installed tension is not as specified, replace the valve spring.

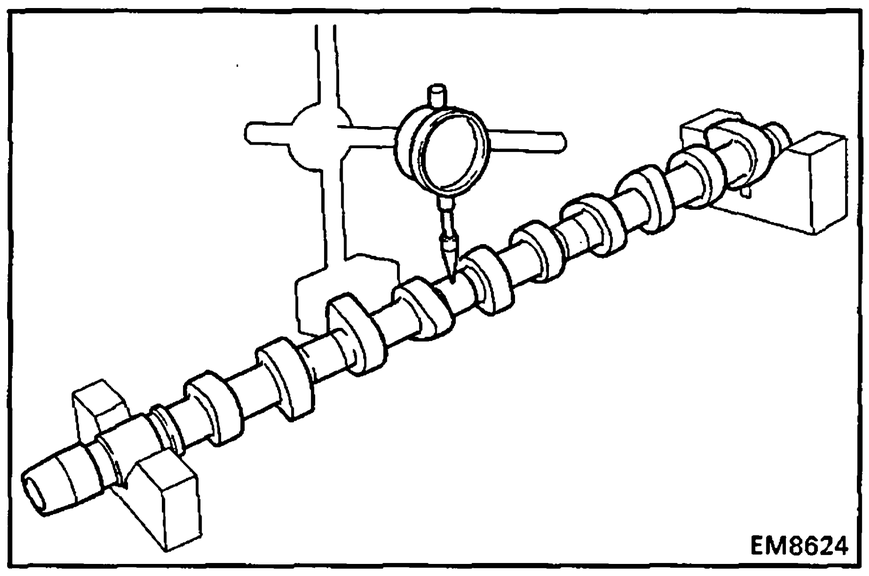

14. INSPECT CAMSHAFTS AND BEARINGS

A. Inspect camshaft for runout

(a) Place the camshaft on V-blocks.

(b) Using a dial indicator, measure the circle runout at the center journal.

Maximum circle runout: 0.10 mm (0.0039 in.)

If the circle runout is greater than maximum, replace the camshaft.

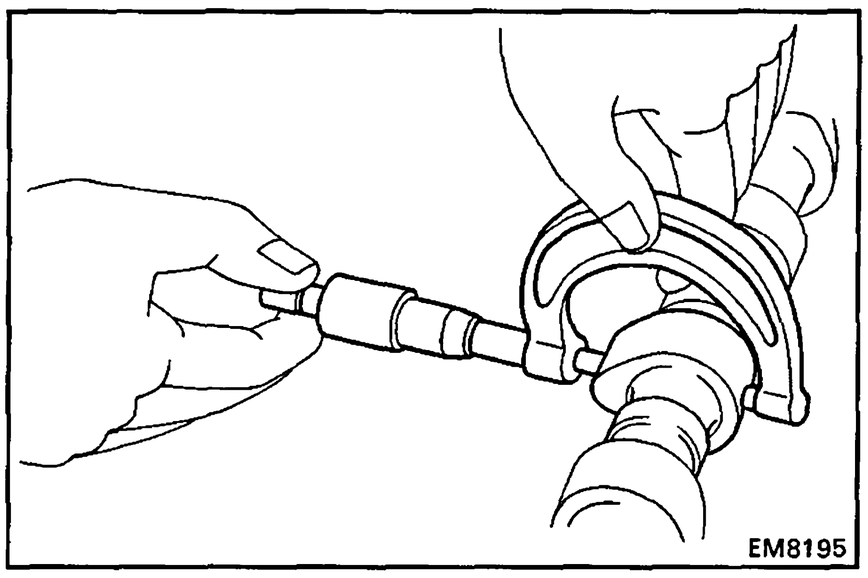

B. Inspect cam lobes

Using a micrometer, measure the cam lobe height.

Standard cam lobe height:

Intake	
1PZ and 1HZ	**55.090 – 55.110 mm (2.1689 – 2.1697 in.)**
1HD-T	**54.440 – 54.460 mm (2.1433 – 2.1441 in.)**
Exhaust	**55.940 – 55.960 mm (2.2024 – 2.2031 in.)**

Minimum cam lobe height:

Intake	
1PZ and 1HZ	**54.59 mm (2.1492 in.)**
1H-D	**53.94 mm (2.1236 in.)**
Exhaust	**55.44 mm (2.1827 in.)**

If the cam lobe height is less than minimum, replace the camshaft.

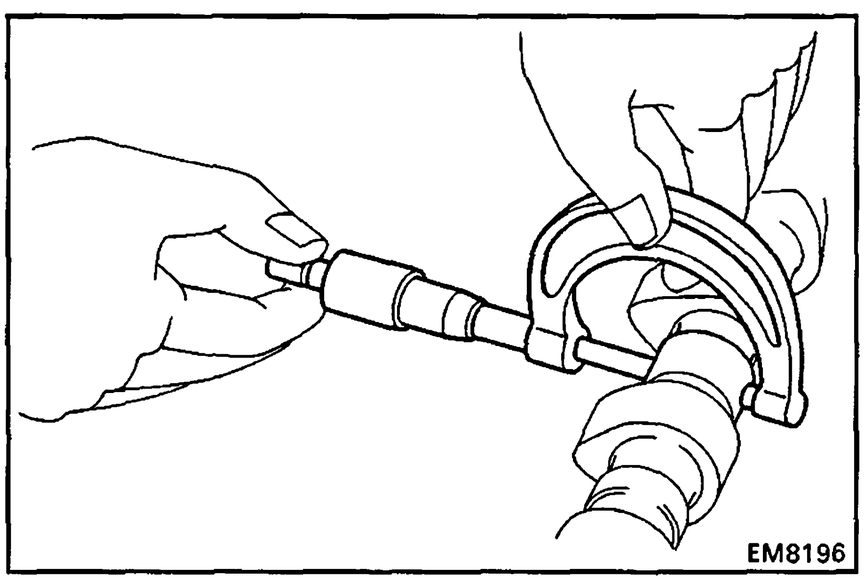

C. Inspect camshaft journals

Using a micrometer, measure the journal diameter.

Journal diameter:

No.1 journal	**34.969 – 34.985 mm (1.3767 – 1.3774 in.)**
Others	**27.986 – 27.988 mm (1.1018 – 1.1023 in.)**

If the journal diameter is not as specified, check the oil clearance.

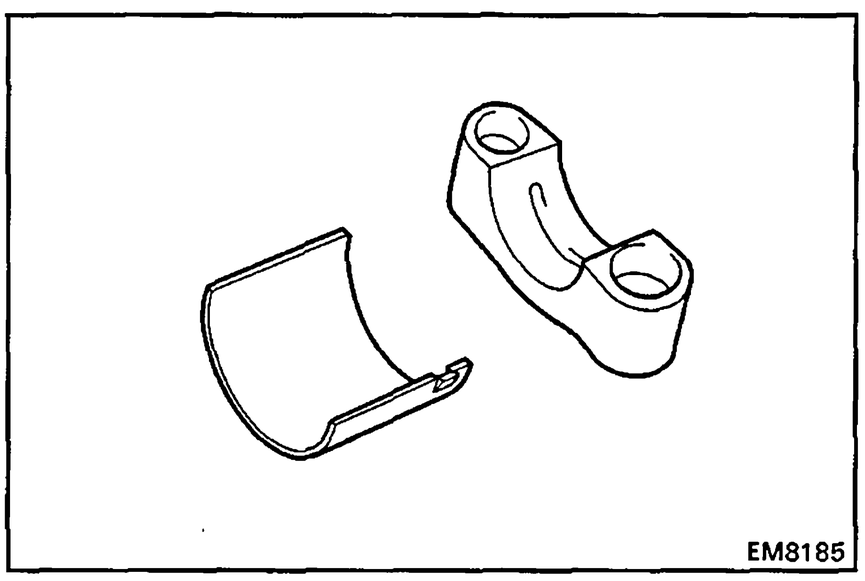

D. Inspect camshaft bearings

Check the bearings for flaking and scoring.

If the bearings are damaged, replace the bearings.

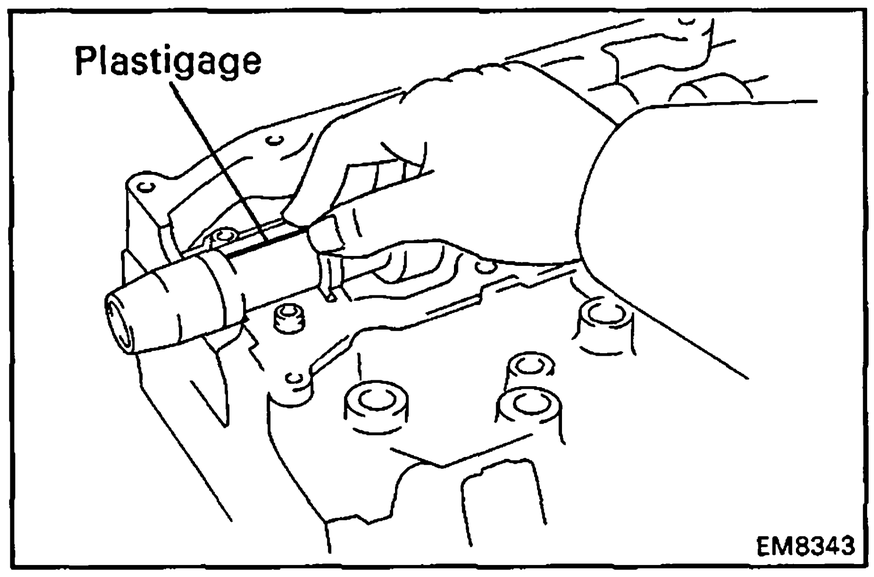

E. Inspect camshaft journal oil clearance

(a) Install the camshaft bearings to the No.1 bearing cap and No.1 journal of the cylinder head.
(See step 4 (b) on page EM-78)

(b) Clean the bearings and camshaft journals.

(c) Place the camshaft on the cylinder head.

(d) Lay a strip of Plastigage across each of the camshaft journals.

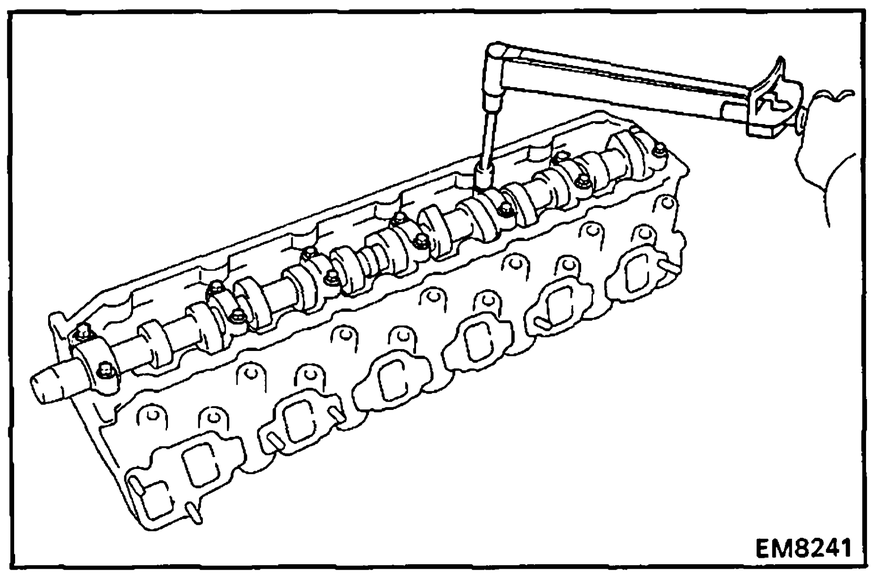

(e) Install the bearing caps.
(See step 4 (c) to (e) on page EM-78)

Torque: 250 kg-cm (18 ft-lb, 25 N·m)

HINT: Do not turn the camshaft.

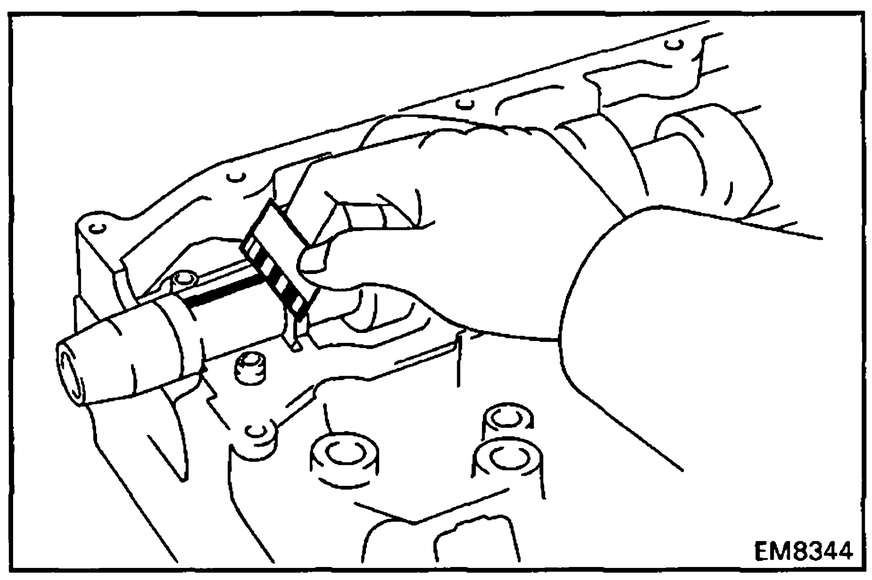

(f) Remove the bearing caps.

(g) Measure the Plastigage at its widest point.

Standard oil clearance:

No.1 journal	**0.022 – 0.074 mm (0.0009 – 0.0029 in.)**
Others	**0.030 – 0.066 mm (0.0012 – 0.0026 in.)**

Maximum oil clearance: 0.10 mm (0.0039 in.)

If the oil clearance is greater than maximum, replace the bearings or camshaft. If necessary, replace the bearing caps and cylinder head.

(h) Completely remove the Plastigage.

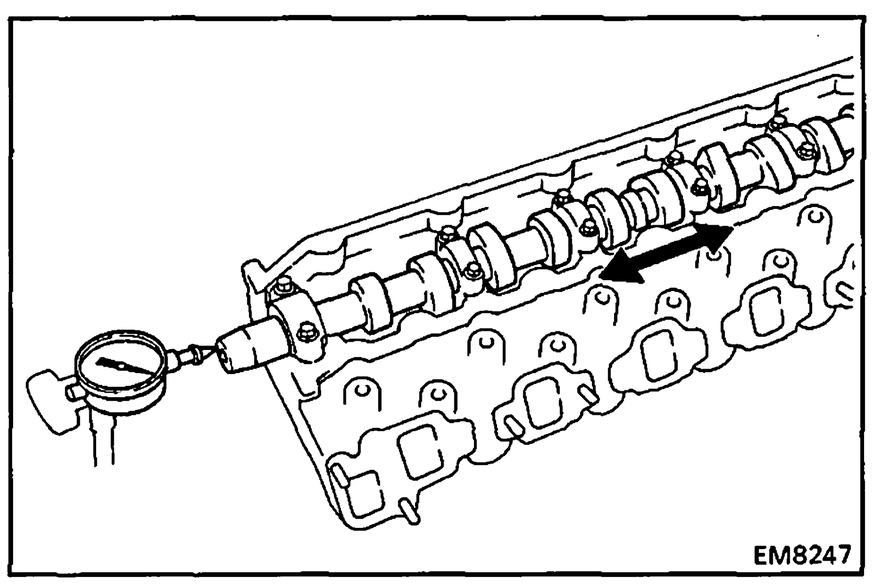

F. Inspect camshaft thrust clearance

(a) Install the camshaft.
(See step 4 on page EM-78)

(b) Using a dial indicator, measure the thrust clearance while moving the camshaft back and forth.

Standard thrust clearance: 0.10 – 0.20 mm (0.0039 – 0.0079 in.)

Maximum thrust clearance: 0.30 mm (0.0118 in.)

If the thrust clearance is greater than maximum, replace the thrust plate. If necessary, replace the camshaft.

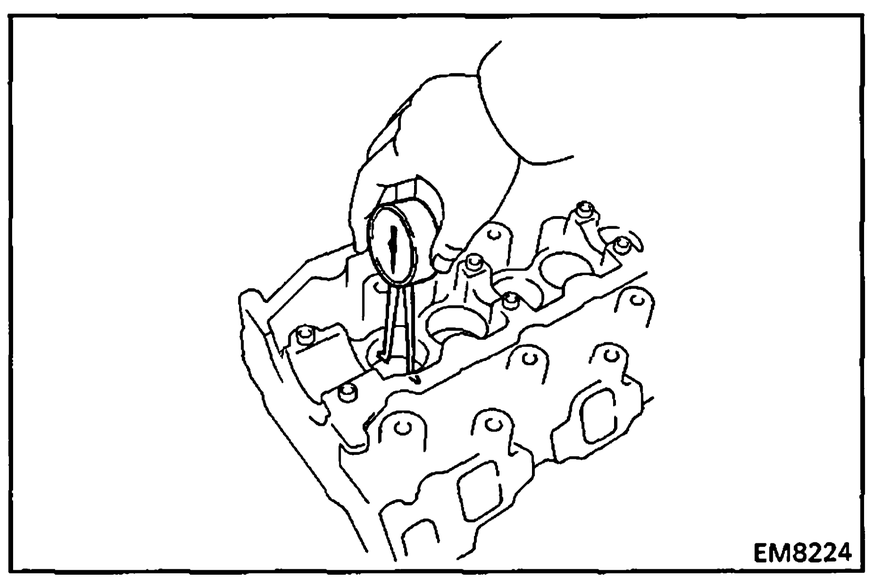

15. INSPECT VALVE LIFTERS AND LIFTER BORES

(a) Using a caliper gauge, measure the lifter bore diameter of the cylinder head.

Lifter bore diameter: 40.960 – 40.980 mm (1.6126 – 1.6134 in.)

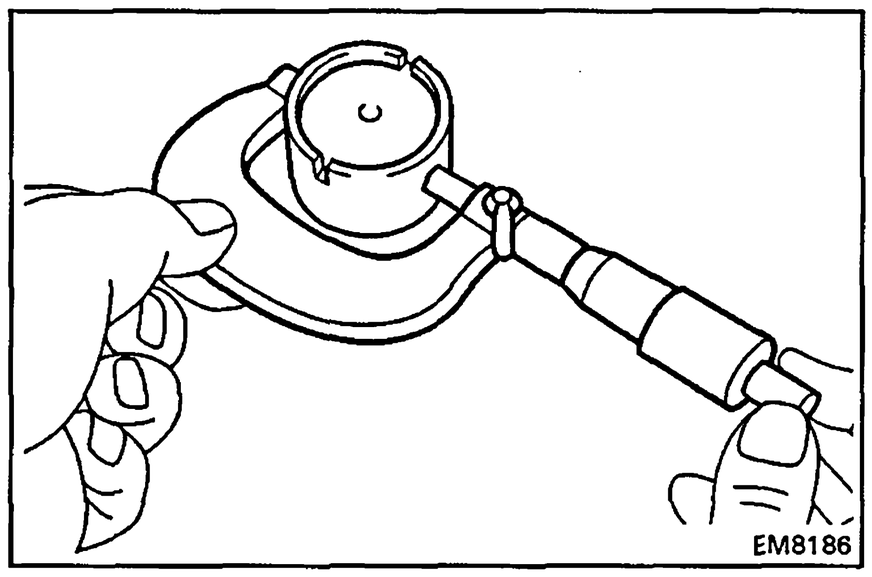

(b) Using a micrometer, measure the lifter diameter.

Lifter diameter: 40.892 – 40.902 mm (1.6099 – 1.6103 in.)

(c) Subtract the lifter diameter measurement from the lifter bore diameter measurement.

Standard oil clearance: 0.058 – 0.083 mm (0.0023 – 0.0033 in.)

Maximum oil clearance: 0.10 mm (0.0039 in.)

If the oil clearance is greater than maximum, replace the lifter. If necessary, replace the cylinder head.

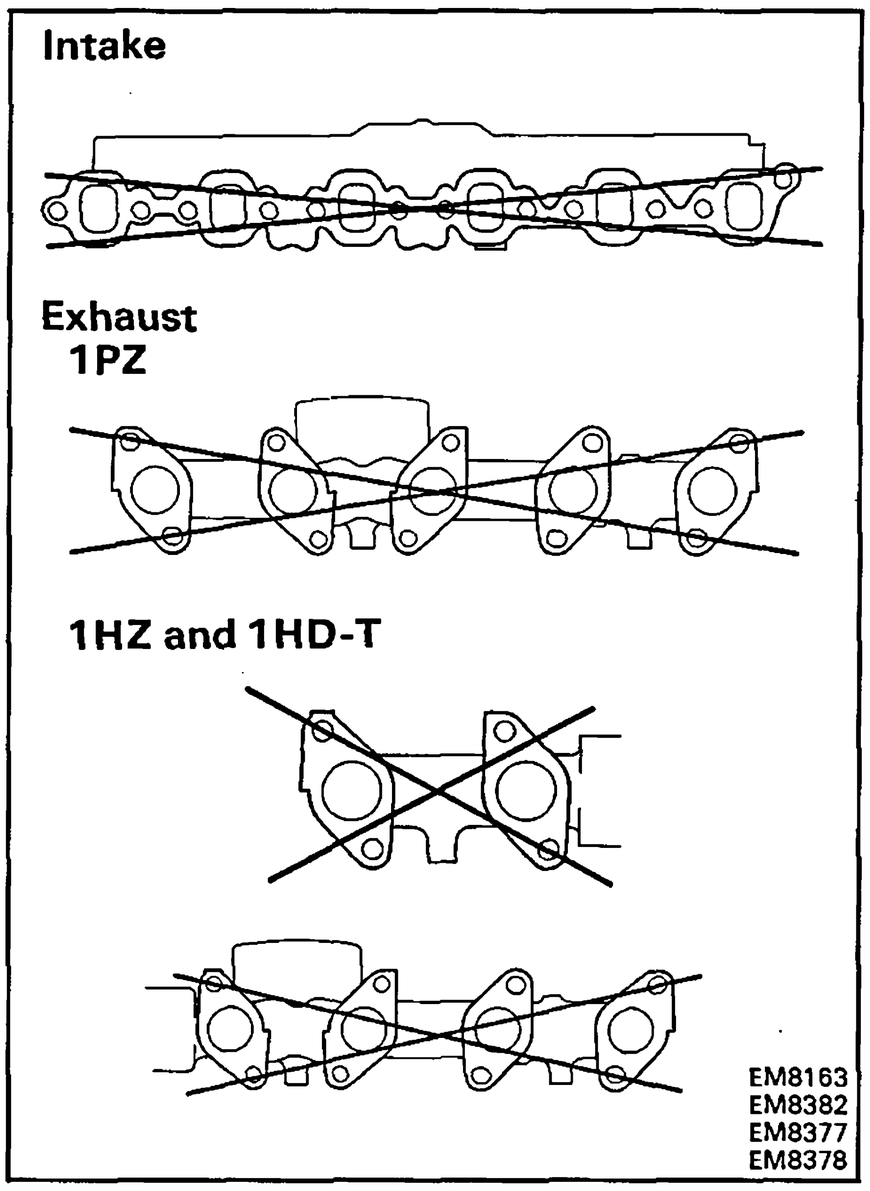

16. INSPECT INTAKE AND EXHAUST MANIFOLDS

Using a precision straight edge and thickness gauge, measure the surface contacting the cylinder head for warpage.

Maximum warpage: 0.40 mm (0.0157 in.)

If warpage is greater than maximum, replace the manifold.

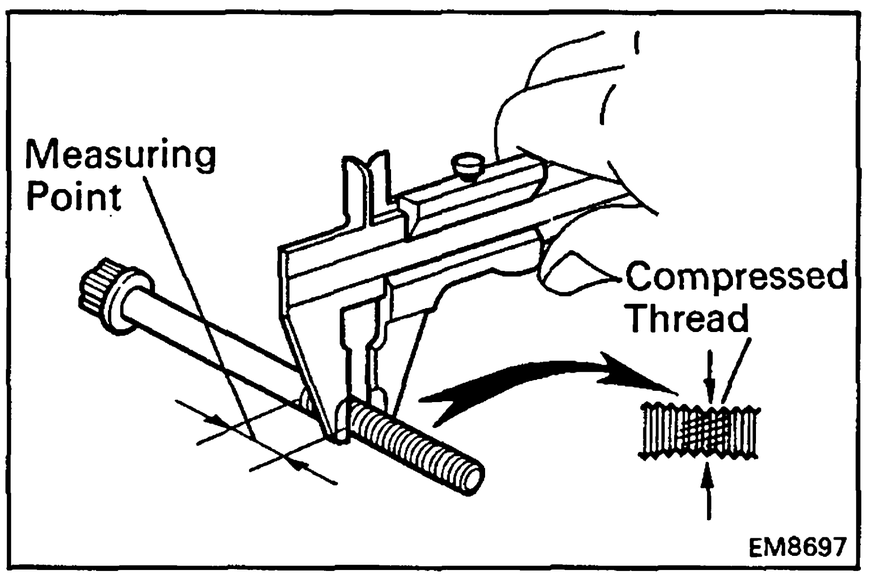

17. INSPECT CYLINDER HEAD BOLTS

Using vernier calipers, measure the minimum outer diameter of the compressed thread at the measuring point.

Standard outer diameter: 10.800 – 11.000 mm (0.4646 – 0.4724 in.)

Minimum outer diameter: 10.55 mm (0.4154 in.)

If the outer diameter is less than minimum, replace the bolt.

REPLACEMENT OF CAMSHAFT OIL SEAL

HINT: There are two methods (A and B) to replace the oil seal as follows:

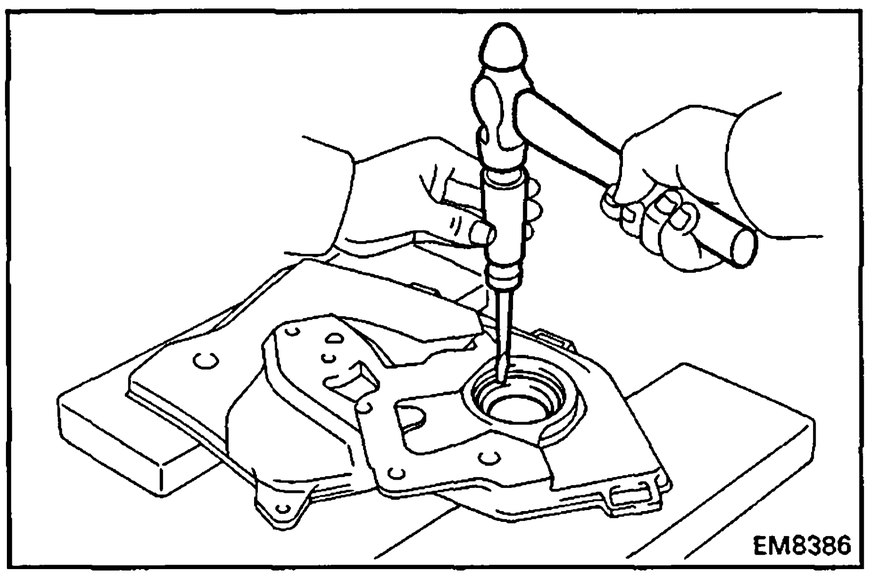

REPLACE CAMSHAFT OIL SEAL

A. If camshaft oil seal retainer is removed from cylinder head:

(a) Using a screwdriver and hammer, tap out the oil seal.

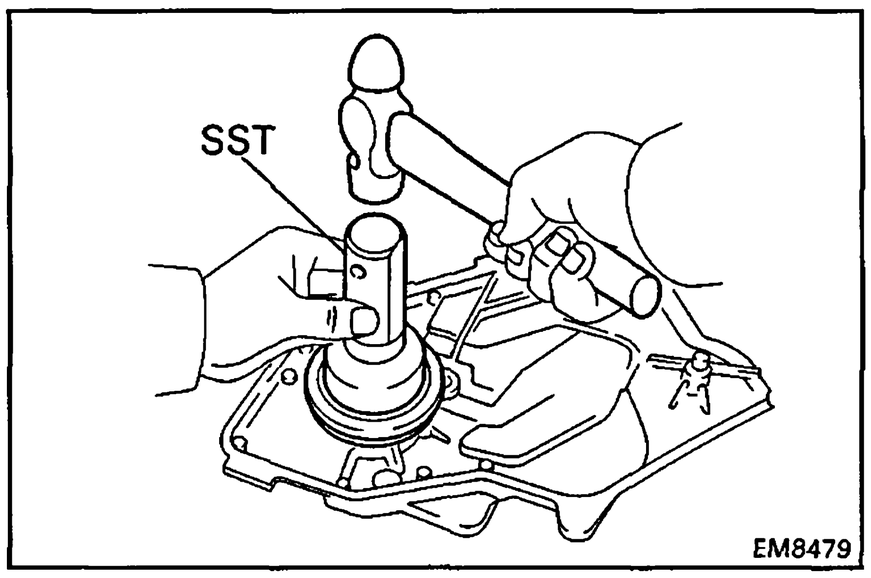

(b) Using SST and a hammer, tap in a new oil seal until its surface is flush with the oil seal retainer edge.

SST 09223-46011

(c) Apply MP grease to the oil seal lip.

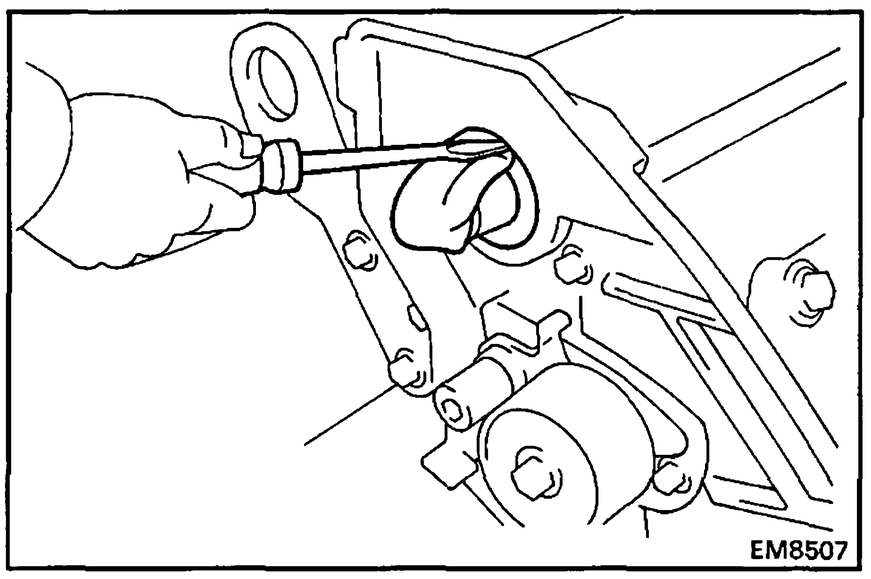

B. If camshaft oil seal retainer is installed to the cylinder head:

(a) Using a screwdriver, pry out the oil seal.

NOTICE: Be careful not to damage the camshaft. Tape the screwdriver tip.

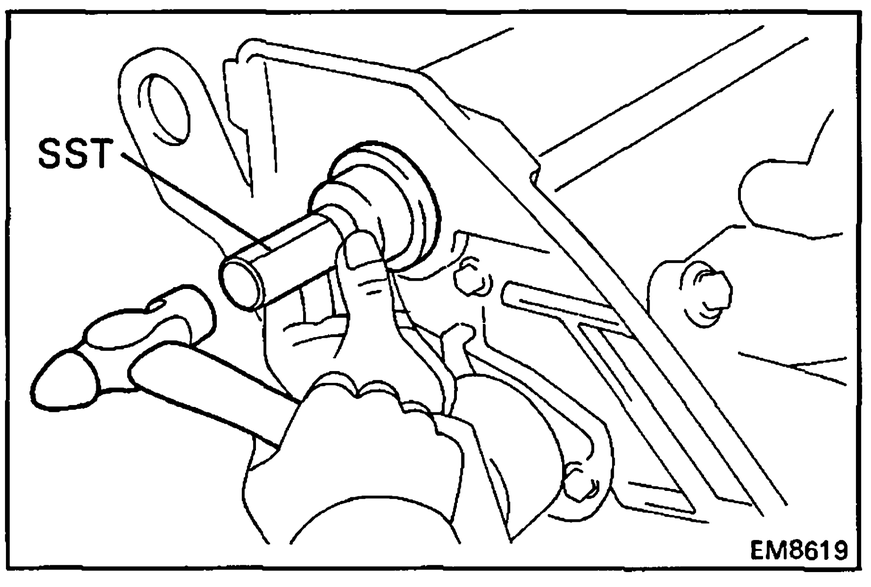

(b) Apply MP grease to a new oil seal lip.

(c) Using SST and a hammer, tap in the oil seal until its surface is flush with the oil seal retainer edge.

SST 09223-46011

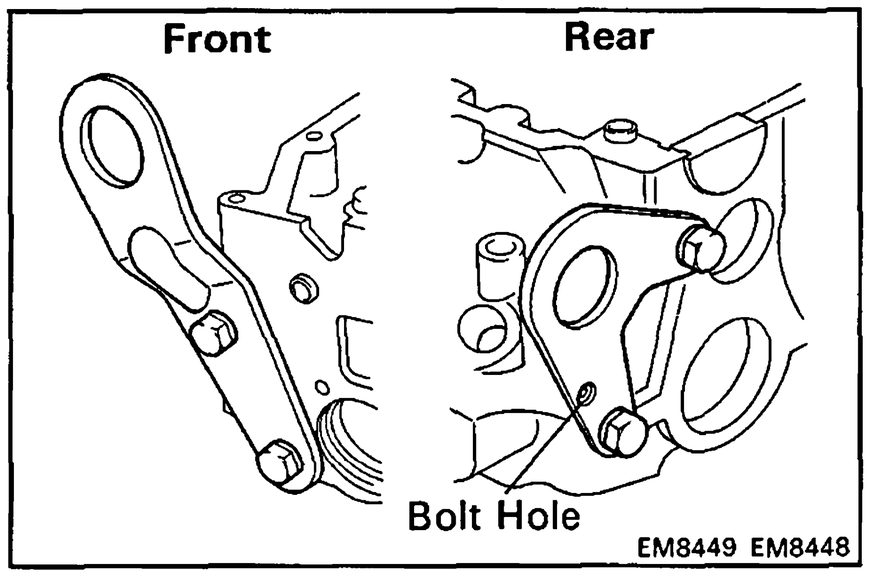

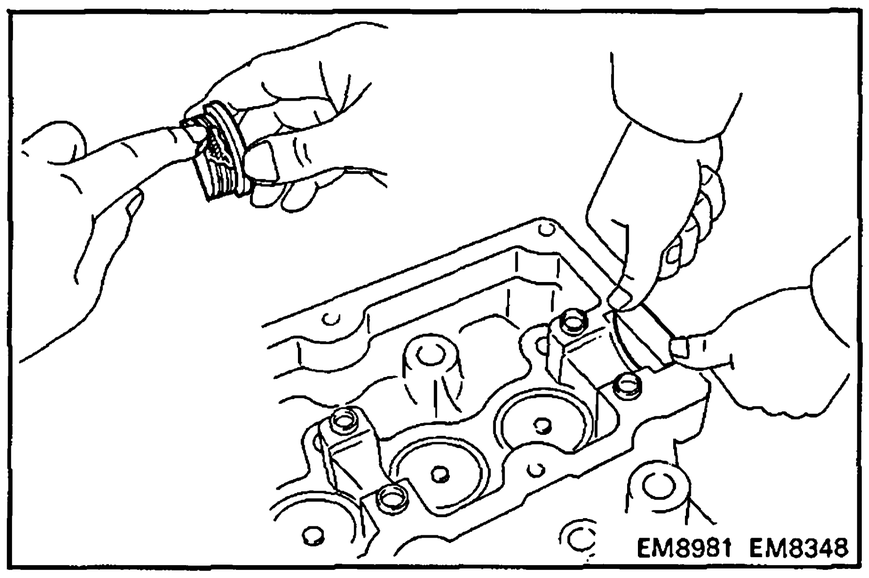

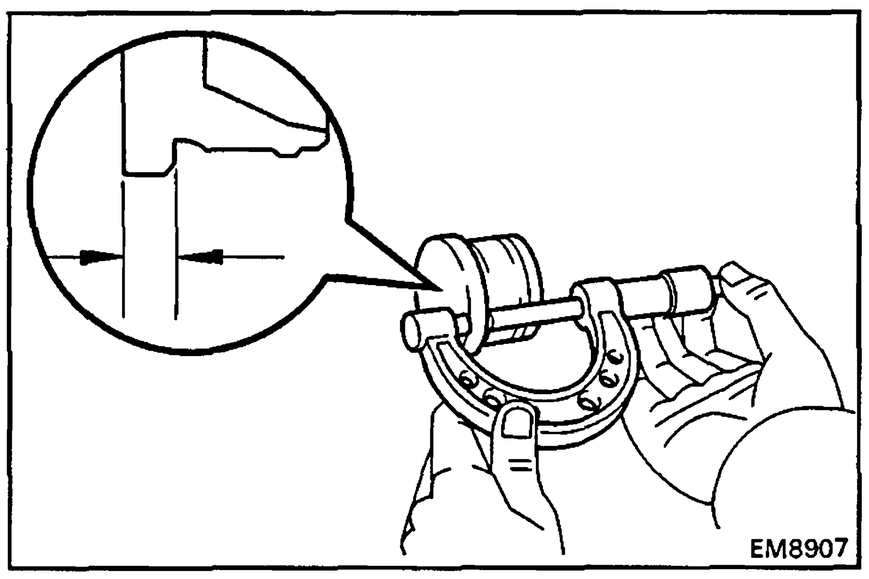

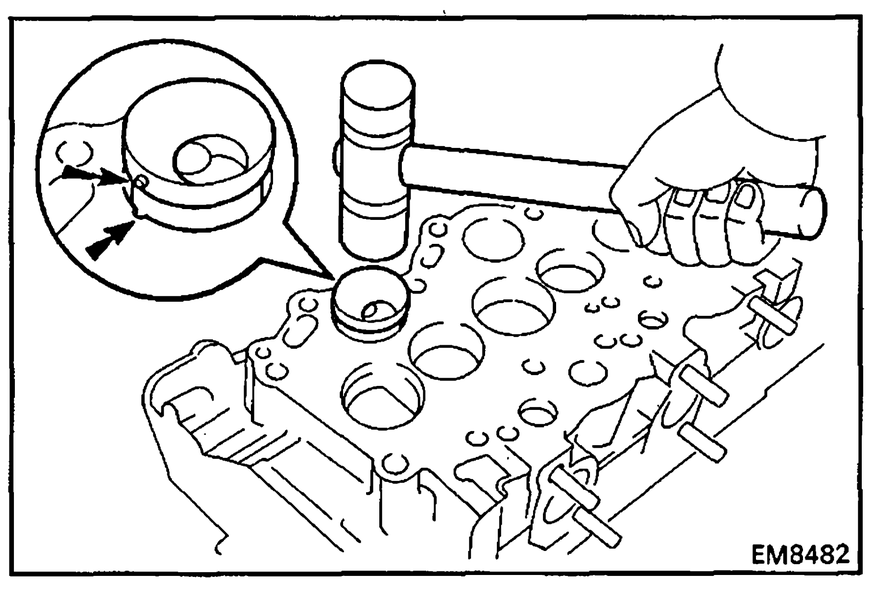

ASSEMBLY OF CYLINDER HEAD

(See page EM-54)

HINT:
- Thoroughly clean all parts to be assembled.
- Before installing the parts, apply new engine oil to all sliding and rotating surfaces.
- Replace all gaskets and oil seals with new ones.

1. INSTALL FRONT AND REAR ENGINE HANGERS

Install the engine hangers as shown in the illustration.

2. INSTALL HALF CIRCULAR PLUG

(a) Remove any old packing (FIPG) material.

(b) Apply seal packing to the half circular plug as shown.

Seal packing: Part No. 08826-00080 or equivalent

(c) Install the half circular plug to the cylinder head.

3. SELECT COMBUSTION CHAMBER SHIM

A. If using new combustion chamber:

Using a micrometer, measure the thickness of each used combustion chamber at the position shown in the illustration, then select the number of shims to be used.

Combustion chamber thickness mm (in.)	No. of shims to be used
6.02 – 6.05 (0.2370 – 0.2382)	0
6.06 – 6.08 (0.2386 – 0.2394)	1
6.09 – 6.11 (0.2398 – 0.2406)	2

Shim thickness: 0.03 mm (0.0012 in.)

NOTICE: If combustion chamber shims were already being used, do not perform the above step; use the same number of shims as were used before.

B. If reusing combustion chamber:

Install the combustion chamber back in the same position it was originally at.

4. (1PZ and 1HZ) INSTALL COMBUSTION CHAMBERS

(a) Align the knock pin of the combustion chamber with the notch of the cylinder head.

(b) Using a plastic-faced hammer, tap in the (shim and) combustion chamber.

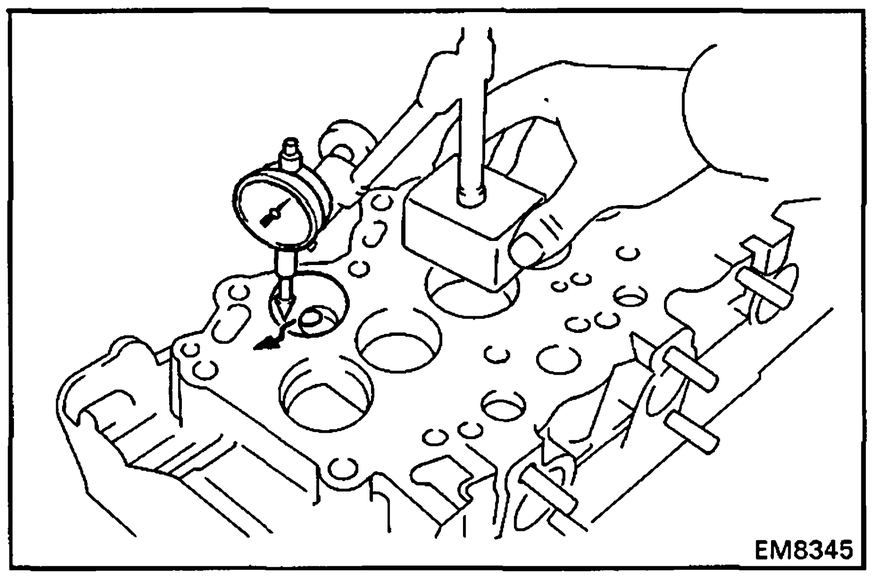

(c) Using a dial indicator, measure the protrusion of the combustion chamber from the cylinder head.

Protrusion: Minus 0.04 – Plus 0.04 mm (Minus 0.0016 – Plus 0.0016 in.)

If the protrusion is less than specified, adjust with shims.

Shim thickness: 0.03 mm (0.0012 in.)

If the protrusion is greater than specification, replace the chamber and recheck the protrusion.

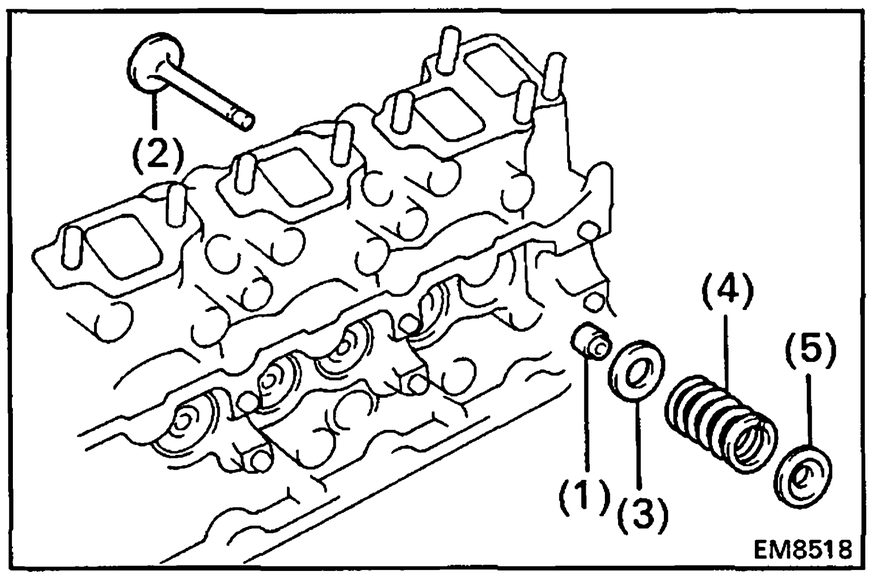

5. INSTALL VALVES

(a) Install the following parts:

(1) Oil seal
(2) Valve
(3) Spring seat
(4) Valve spring
(5) Spring retainer

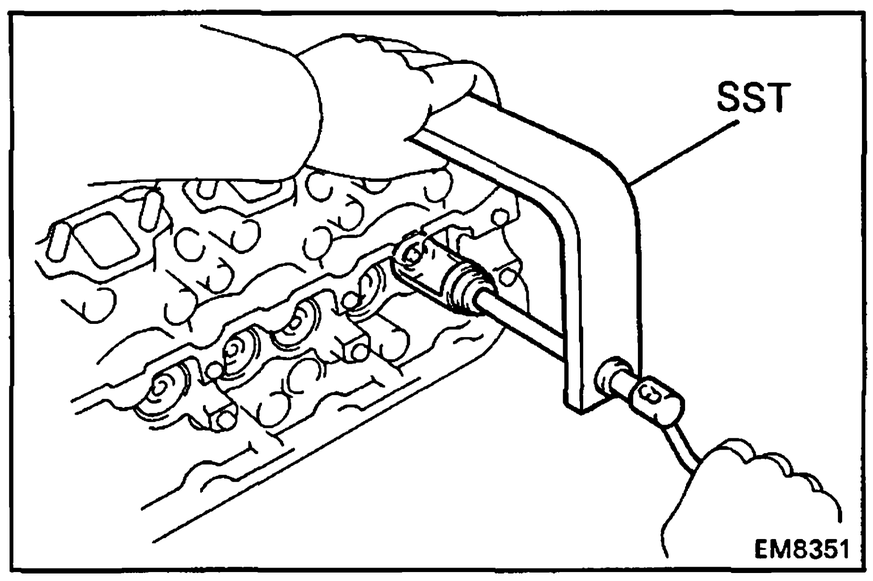

(b) Using SST, compress the valve spring and place the two keepers around the valve stem.

SST 09202-43013

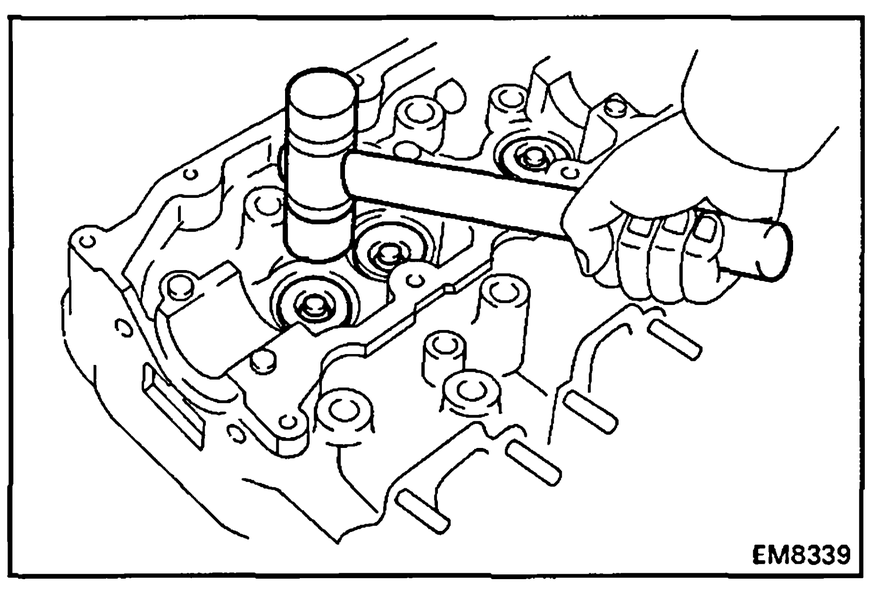

(c) Using a plastic-faced hammer, lightly tap the valve stem tip to assure proper fit.

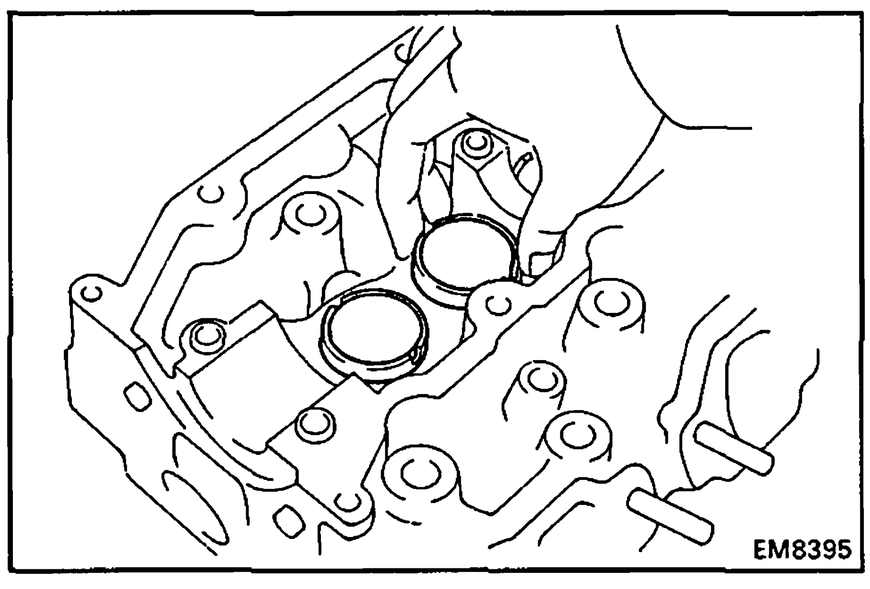

6. INSTALL VALVE LIFTERS AND SHIMS

Check the valve lifter rotates smoothly by hand.

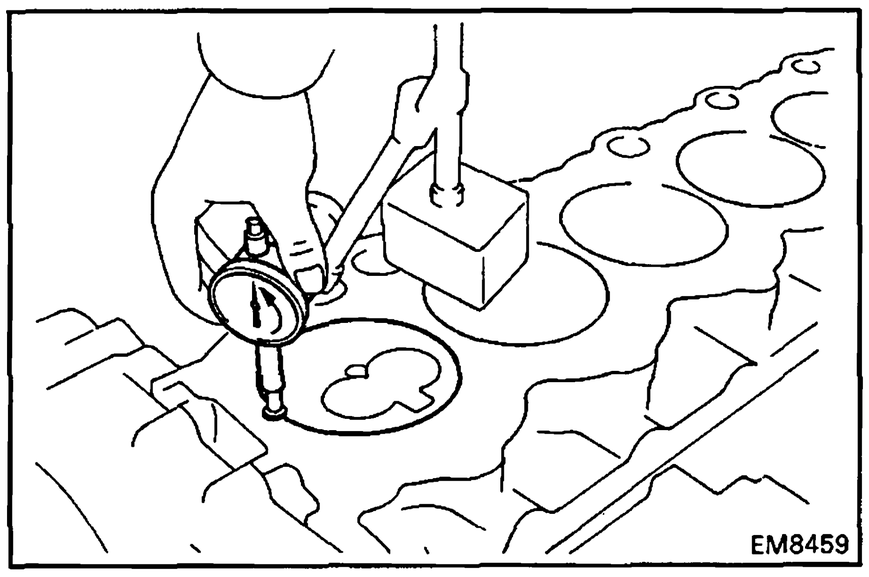

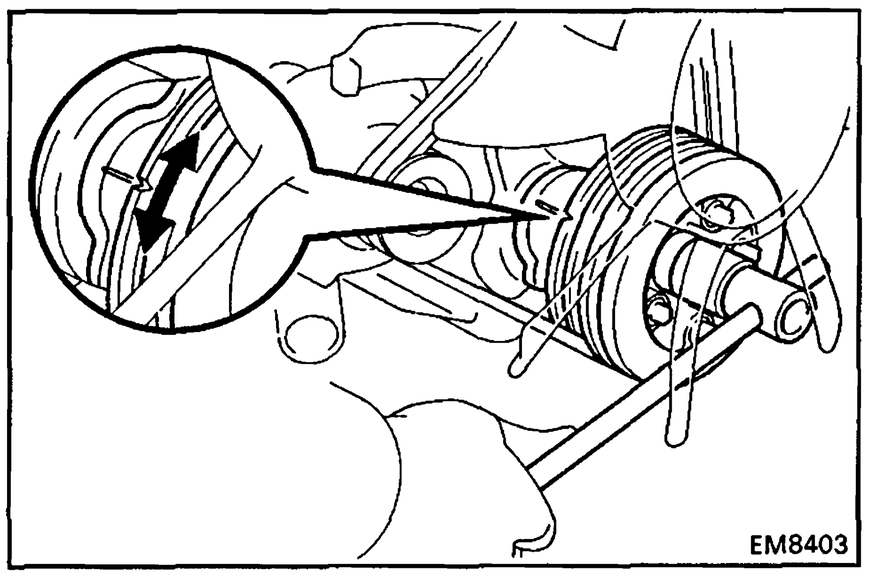

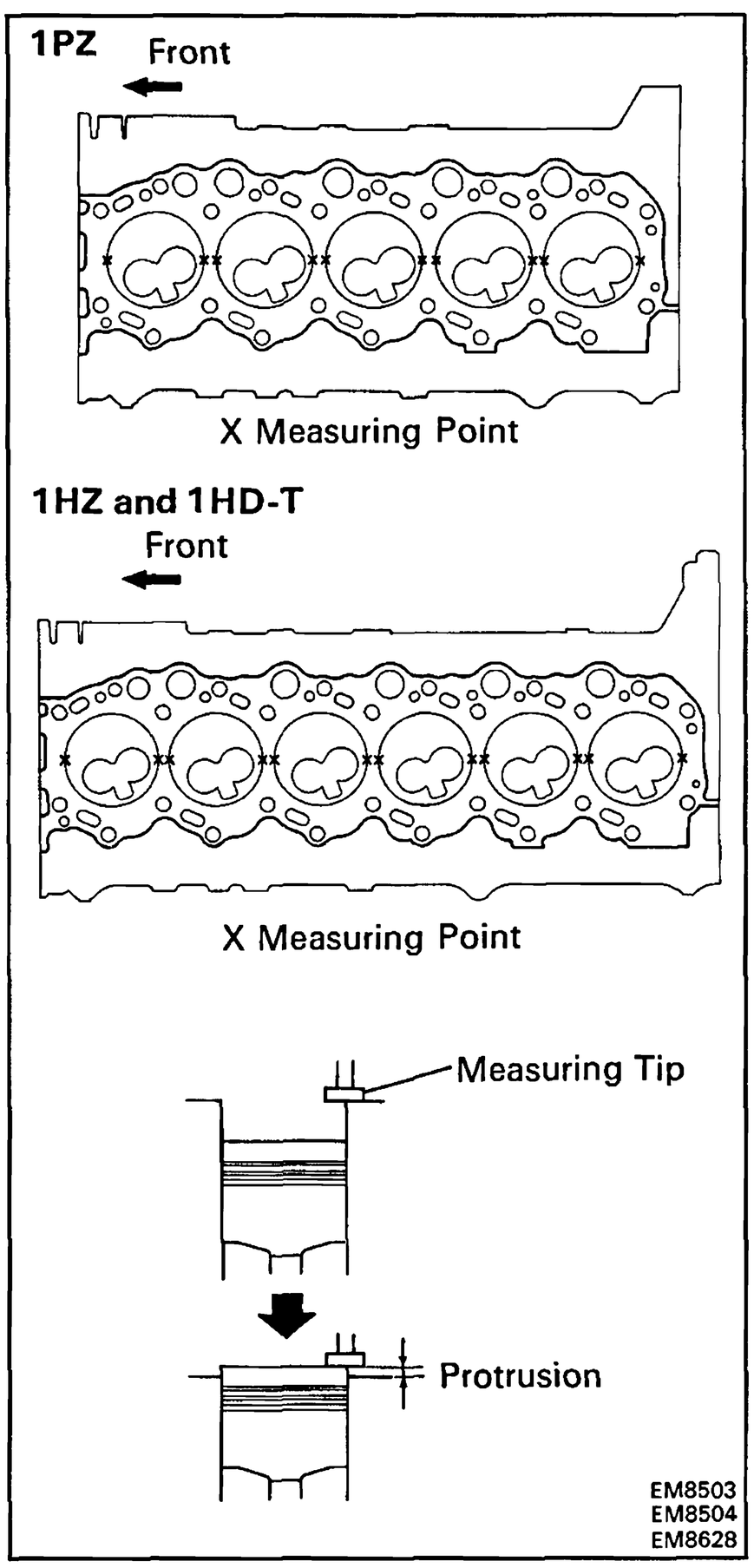

INSTALLATION OF CYLINDER HEAD

(See page EM-54)

1. CHECK PISTON PROTRUSION AND SELECT CYLINDER HEAD GASKET

A. Check piston protrusions each cylinder

(a) Clean the cylinder block solvent.

(b) Set the piston of the cylinder to be measured to slightly befor TDC.

(c) Place a dial indicator on the cylinder block, and set the dial indicator at 0 mm (0 in.)

HINT:

- Use a dial indicator measuring tip as shown in the illustration.
- Make sure that the measuring tip is sqaure to the cylinder block gasket surface and piston head when taking the measurments.

(d) Find where the piston head protrudes most by slowly turning the crankshaft clockwise and counterclockwise.

(e) Measure each cylinder at two places as shown in the illustration, making a tatal of ten measurements (1PZ) or twelve measurements (1HZ and 1HD-T).

(f) For the piston protrusion value of each cylinder, use the average of the two measurements of each cylinder.

Protrusion:

1PZ and 1HZ

0.405 – 0.655 mm (0.0159 – 0.0258 in.)

1HD-T

0.475 – 0.725 mm (0.0187 – 0.0285 in.)

(When removing piston and connecting rod assembly)

If the protrusion is not as specified, remove the piston and connecting rod assembly (See page EM-86) and reinstall it (See page EM-108).

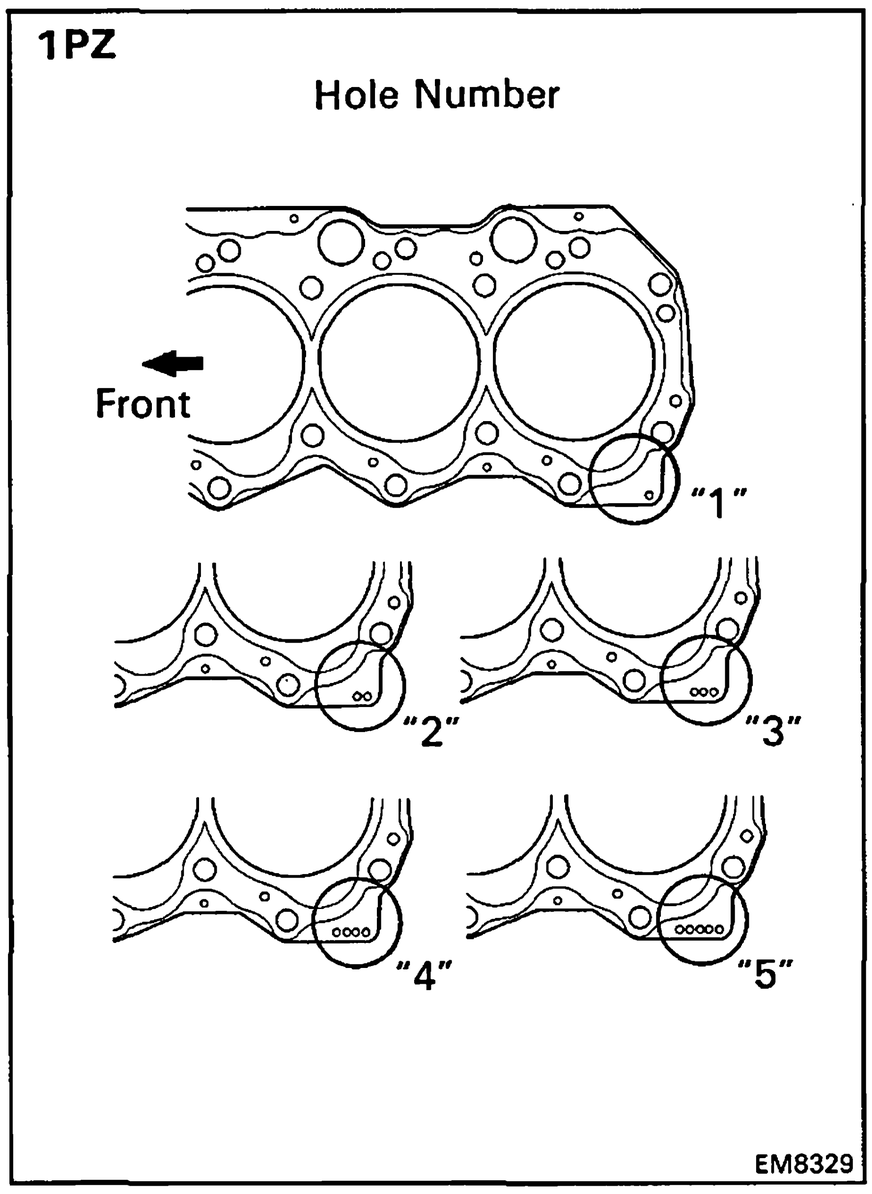

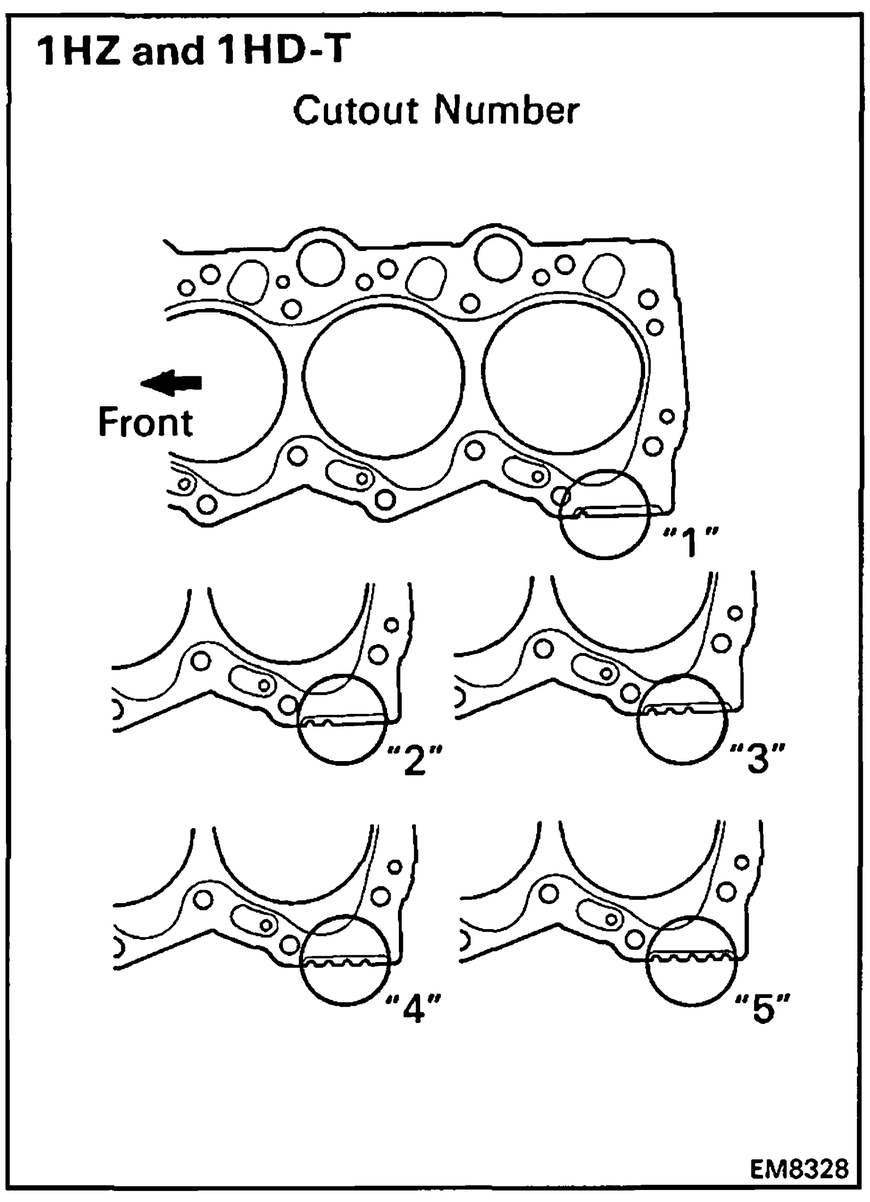

B. Select new cylinder head gasket (1PZ)

HINT: There are five types of cylinder head gasket (hole number 1 to 5) installed at factory, but only three types for supply parts (hole number "1", "3" and "5"), so when replacing the gasket select from one of three types above.

New cylinder head gasket thickness:

Hole number "1"	**1.16 – 1.24 mm (0.0457 – 0.0488 in.)**
Hole number "3"	**1.26 – 1.34 mm (0.0496 – 0.0528 in.)**
Hole number "5"	**1.36 – 1.44 mm (0.0535 – 0.0567 in.)**

Select the largest piston protrusion value from the measurements made, then select the appropriate cylinder head gasket according to the table below.

Piston protrusion mm (in.)	Gasket size
0.455 (0.0179) or less	Use "1"
0.456 – 0.555 (0.0180 – 0.0219)	Use "3"
0.556 (0.0219) or more	User "5"

(1HZ and 1HD-T)

HINT: There are five types of cylinder head gasket (cutout number 1 to 5) installed at factory, but only three types for supply parts (cutout number "1", "3" and "5"), so when replacing the gasket select from one of three types above.

New cylinder head gasket thickness:

Cutout number "1"	**1.15 – 1.25 mm (0.0453 – 0.0492 in.)**
Cutout number "3"	**1.25 – 1.35 mm (0.0492 – 0.0531 in.)**
Cutout number "5"	**1.35 – 1.45 mm (0.0531 – 0.0571 in.)**

Select the largest piston protrusion value from the measurements made, then select the appropriate cylinder head gasket according to the table below.

1HZ

Poston protrusion mm (in.)	Gasket size
0.455 (0.0179) or less	Use "1"
0.456 – 0.555 (0.0180 – 0.0219)	Use "3"
0.556 (0.0246) or more	Use "5"

1HD-T

Piston protrusion mm (in.)	Gasket size
0.525 (0.0207) or less	Use "1"
0.526 – 0.625 (0.0207 – 0.0246)	Use "3"
0.626 (0.0246) or more	Use "5"

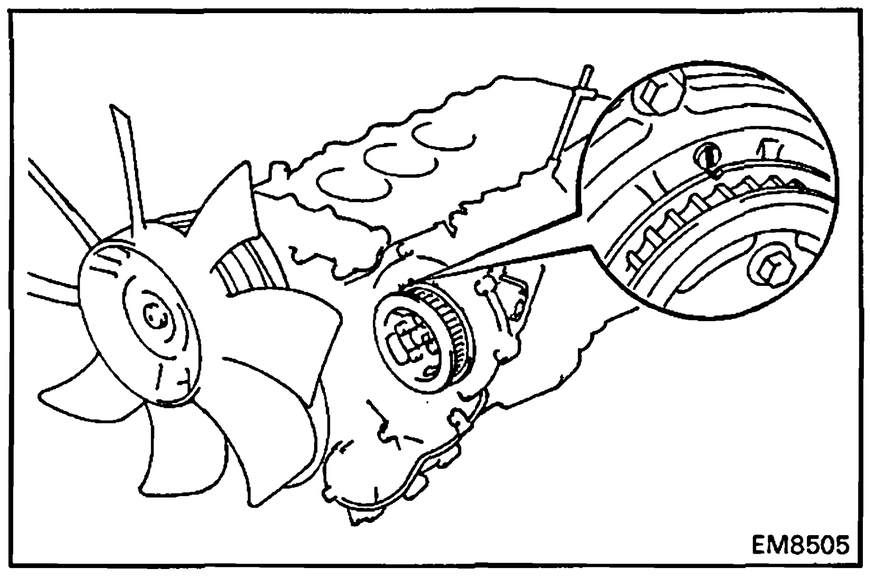

2. SET NO.1 CYLINDER TO BDC

Turn the crankshaft pulley, and align the BDC mark of the timing gear cover with the No.1 flange groove of the No.2 camshaft timing pulley.

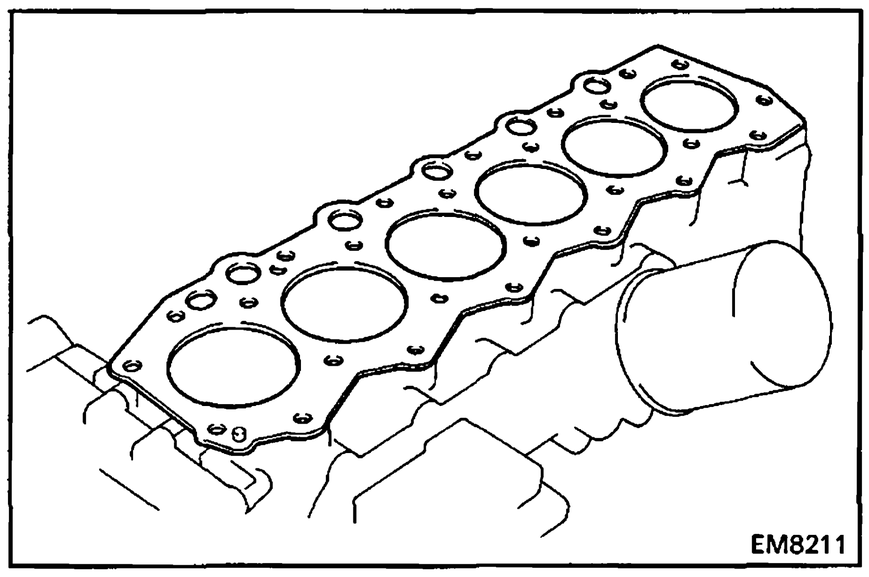

3. INSTALL CYLINDER HEAD

A. Place cylinder head on cylinder block

(a) Place a new cylinder head gasket in position on the cylinder block.

NOTICE: Be careful of the installation direction.

(b) Place the cylinder head in position on the cylinder head gasket.

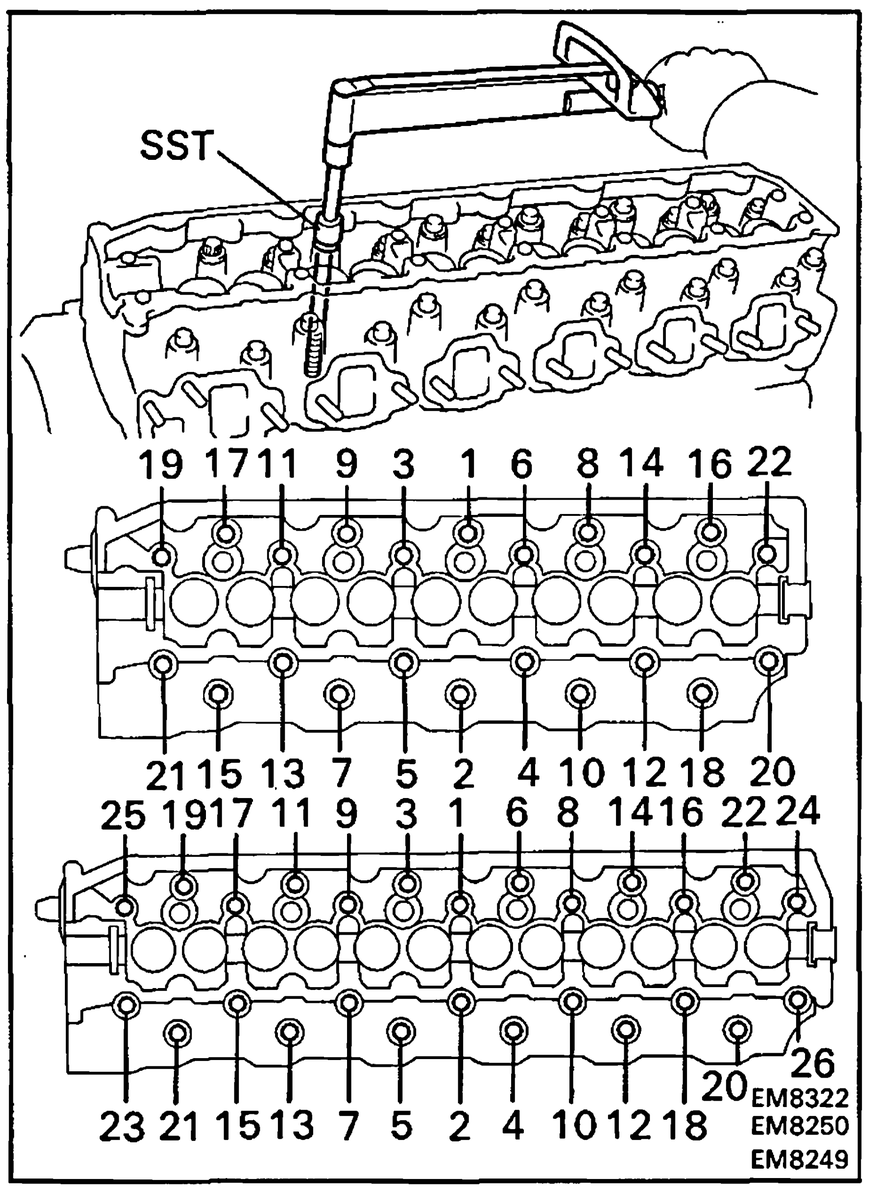

B. Install cylinder head bolts

HINT:

- The cylinder head bolts are tightened in three progressive steps.
- If any of bolts break or deform, replace them.

(a) Apply a light coat of engine oil on the threads and under the heads of the cylinder head bolts.

(b) First, using SST, install and uniformly tighten the twenty-two cylinder head bolts (1PZ) or twenty-six cylinder head bolts (1HZ and 1HD-T) in several passes in the sequence shown.

SST 09011 – 38121

Torque: 700 kg-cm (51 ft-lb, 69 N·m)

If any one of the bolts does not meet the torque specification, replace the bolt.

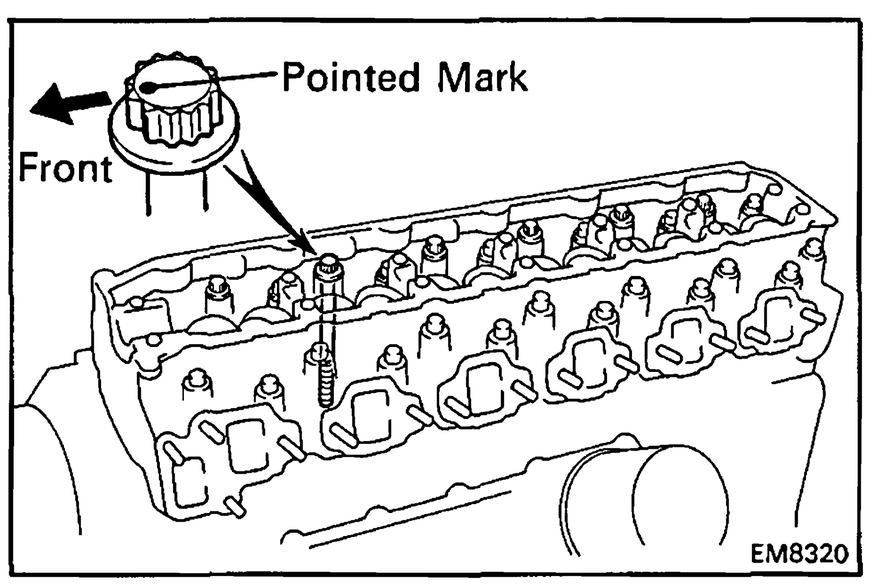

(c) Mark the front of the cylinder head bolt head with paint.

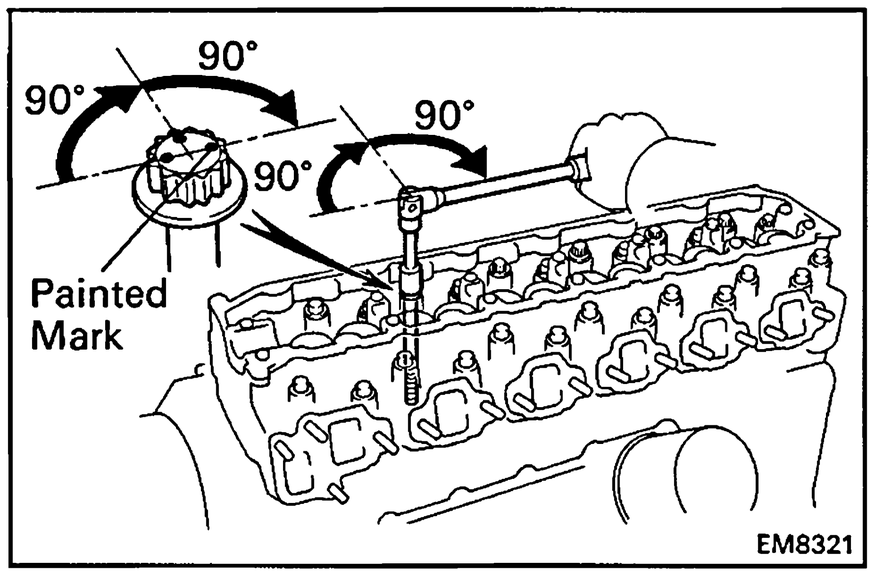

(d) 2nd, retighten the cylinder head bolts 90° in the numerical order shown above.

(e) 3rd, retighten cylinder head bolts by an additional 90°.

(f) Check that the painted mark is now facing rearward.

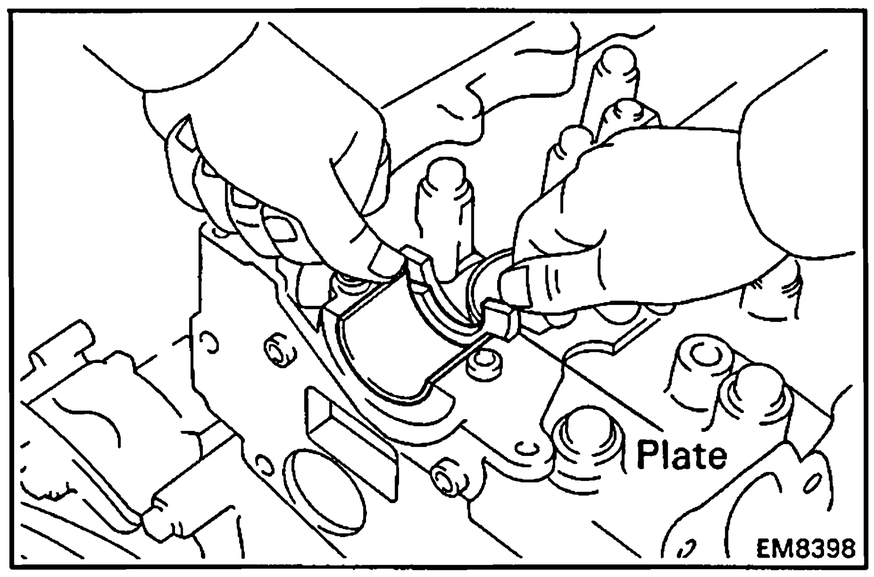

4. INSTALL CAMSHAFT

(a) Install the camshaft thrust plate to the cylinder head.

(b) Install the camshaft bearings to the No.1 bearing cap and No.1 journal of the cylinder head.

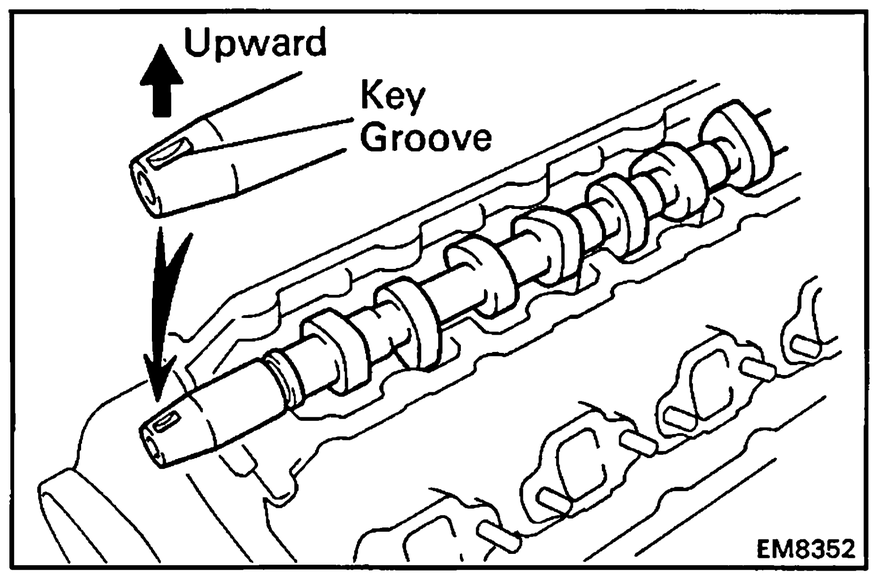

(c) Place the camshaft on the cylinder head, facing the key groove upward.

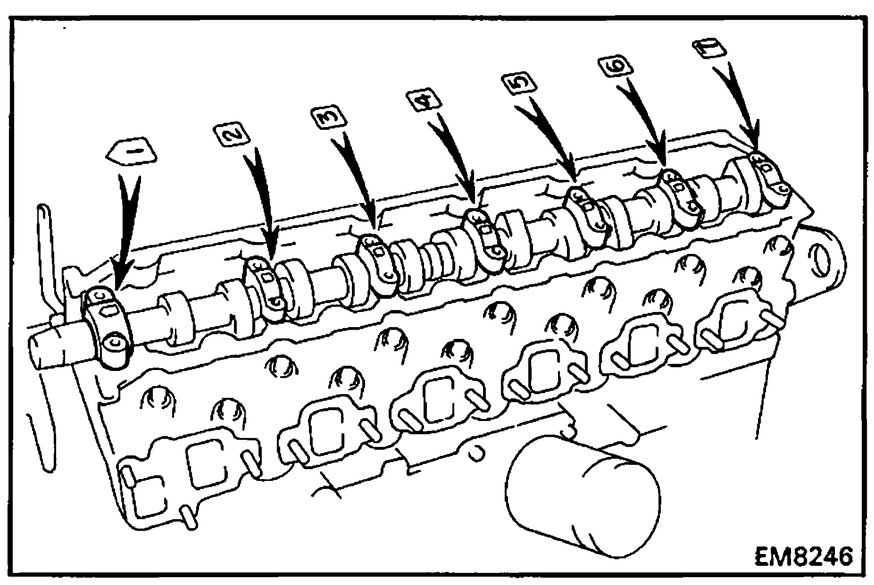

(d) Install the six (1PZ) or seven (1HZ and 1HD-T) bearing caps in their proper locations.

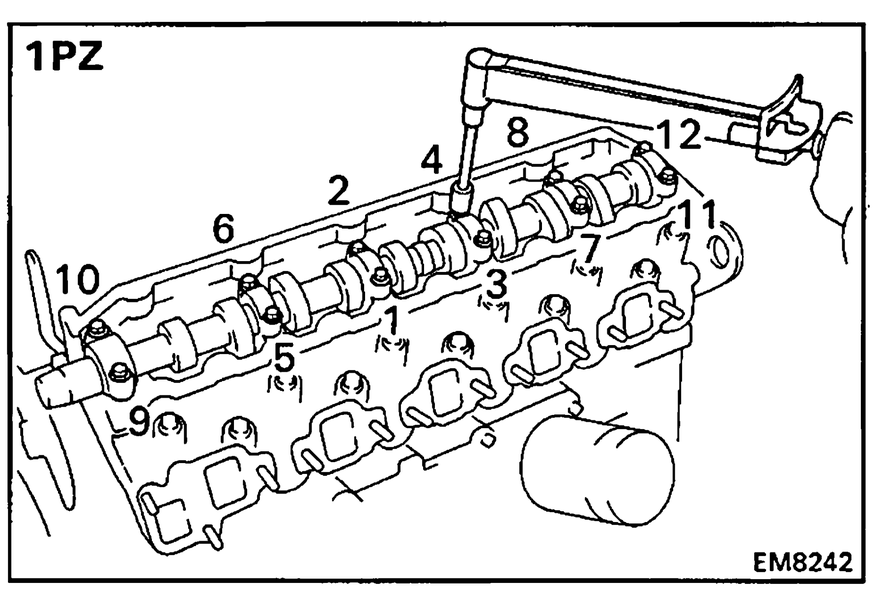

(e) (1PZ)
Install and uniformly tighten the twelve bearing cap bolts in several passes in the sequence shown.

Torque:

No.1 journal	**250 kg-cm (18 ft-lb, 25 N·m)**
Others	**185 kg-cm (13 ft-lb, 18 N·m)**

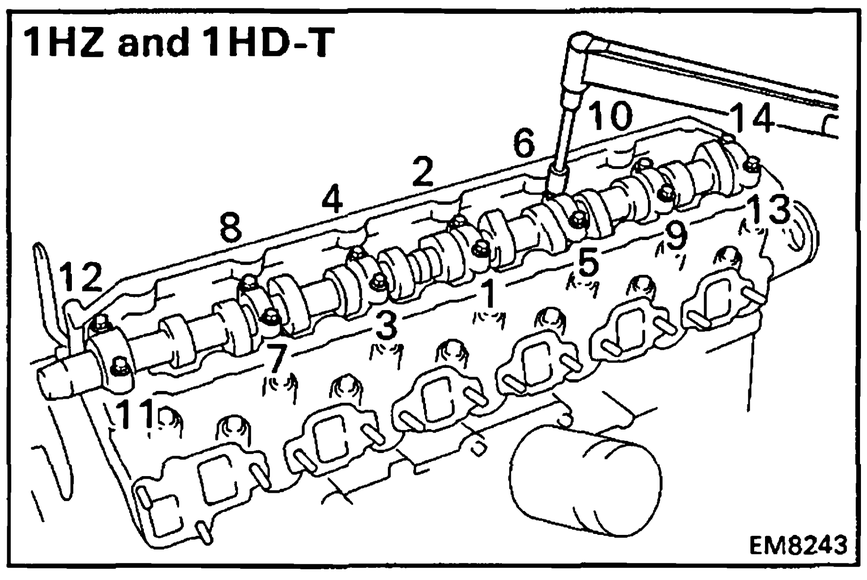

(f) (1HZ and 1HD-T)
Install and uniformly tighten the fourteen bearing cap bolts in several passes in the sequence shown.

Torque:

No.1 journal	**250 kg-cm (18 ft-lb, 25 N·m)**
Others	**185 kg-cm (13 ft-lb, 18 N·m)**

5. ADJUST VALVE CLEARANCE (See page EM-19)

Valve clearance (Cold):

Intake	**0.15 – 0.25 mm (0.006 – 0.010 in.)**
Exhaust	**0.35 – 0.45 mm (0.014 – 0.018 in.)**

6. INSTALL CAMSHAFT OIL SEAL RETAINER

(a) Remove any old packing (FIPG) material and be careful not to drop any oil on the contact surfaces of the camshaft oil seal retainer and cylinder head.

- Using a razor blade and gasket scraper, remove all the old packing (FIPG) material from the gasket surfaces and sealing groove.
- Thoroughly clean all components to remove all the loose material.
- Using a non-residue solvent, clean both sealing surfaces.

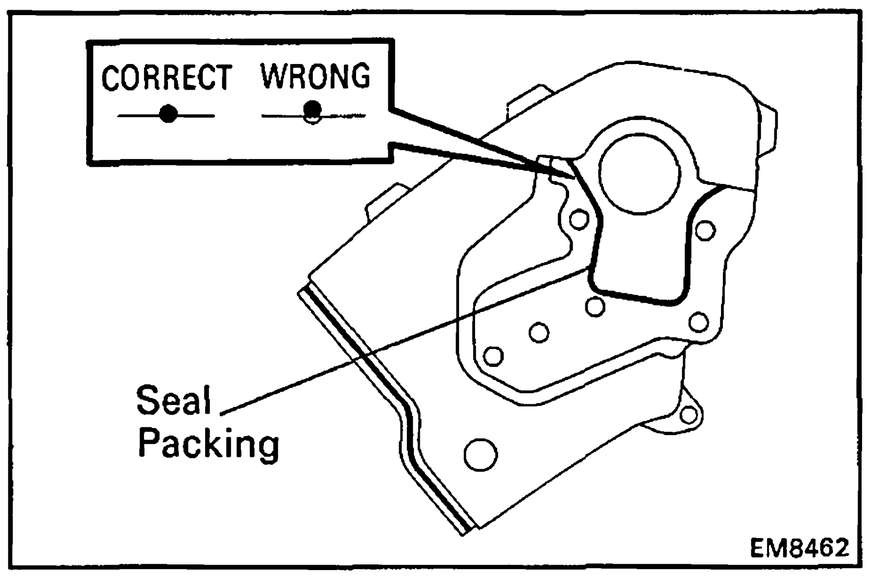

(b) Apply seal packing to the camshaft oil seal retainer as shown in the illustration.

Seal packing: Part No.08826-00080 or equivalent

- Install a nozzle that has been cut to a 2 – 3 mm (0.08 – 0.12 in.) opening.
- Parts must be assembled within 5 minutes of application. Otherwise the material must be removed and reapplied.
- Immediately remove nozzle from the tube and reinstall cap.

(c) Install the retainer with the four bolts.

Torque: 200 kg-cm (14 ft-lb, 20 N·m)

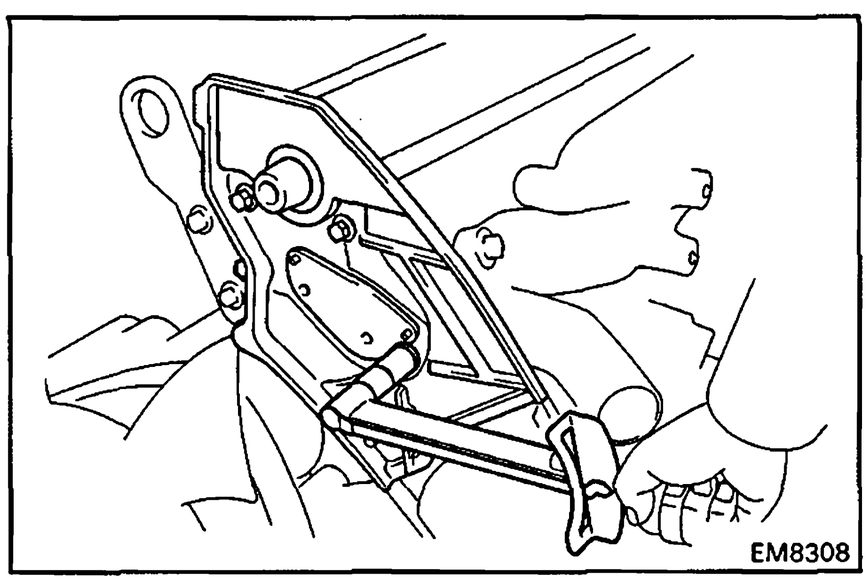

7. INSTALL PULLEYS AND TIMING BELT
(See steps 2 to 4 and 6 to 11 on pages EM-38 to 41)

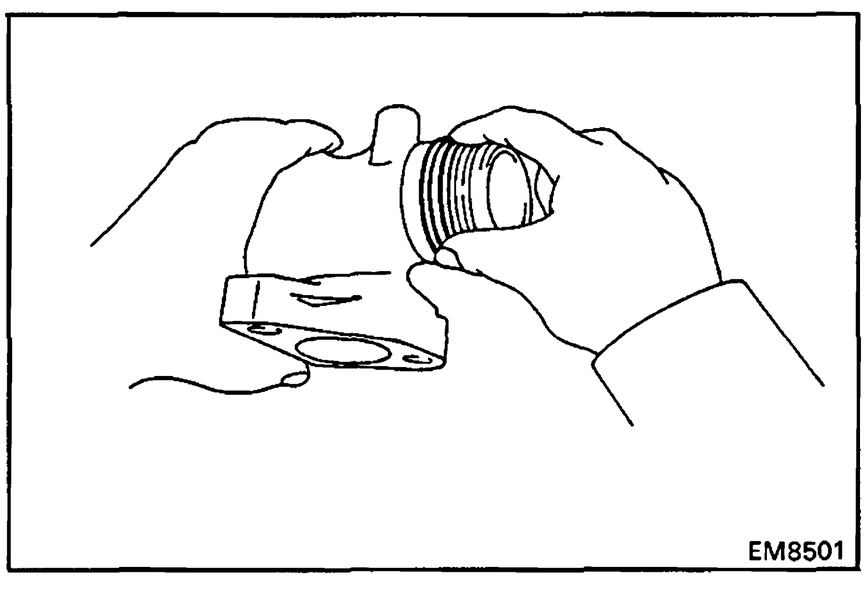

8. (1HZ and 1HD-T)
ASSEMBLY EXHAUST MANIFOLDS

(a) Remove all the O-ring material from the manifold grooves.

(b) Install new O-rings.

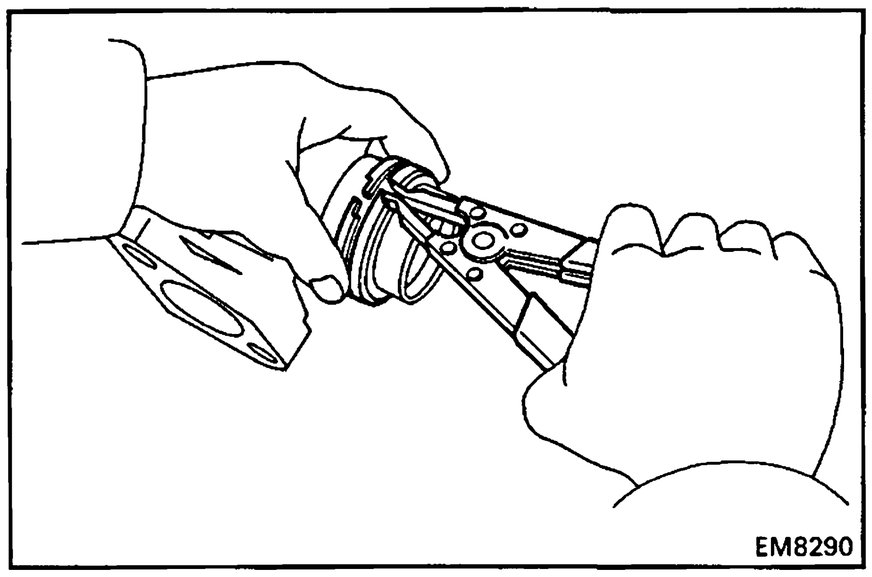

(c) Using snap ring pliers, install the two manifold rings.

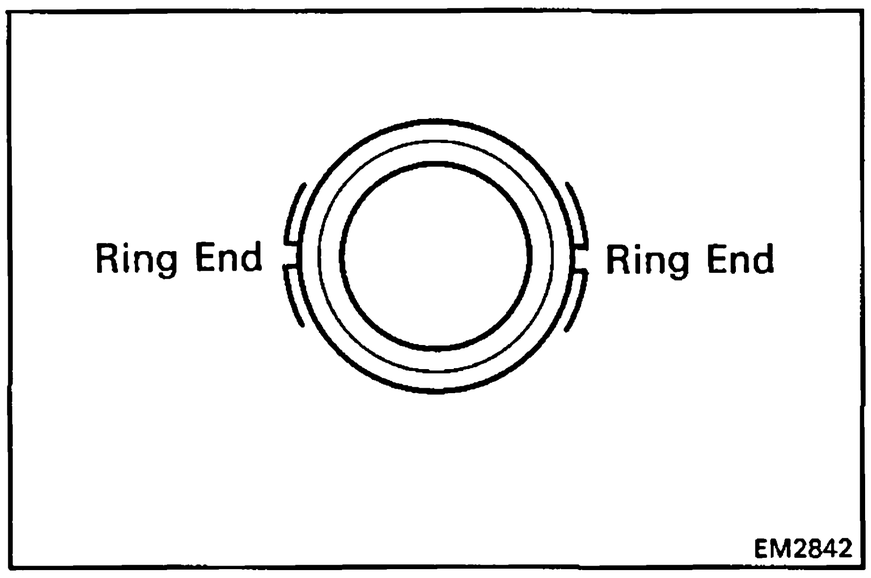

(d) Position the manifold rings so that the ring ends are as shown.

NOTICE: Do not align the ends.

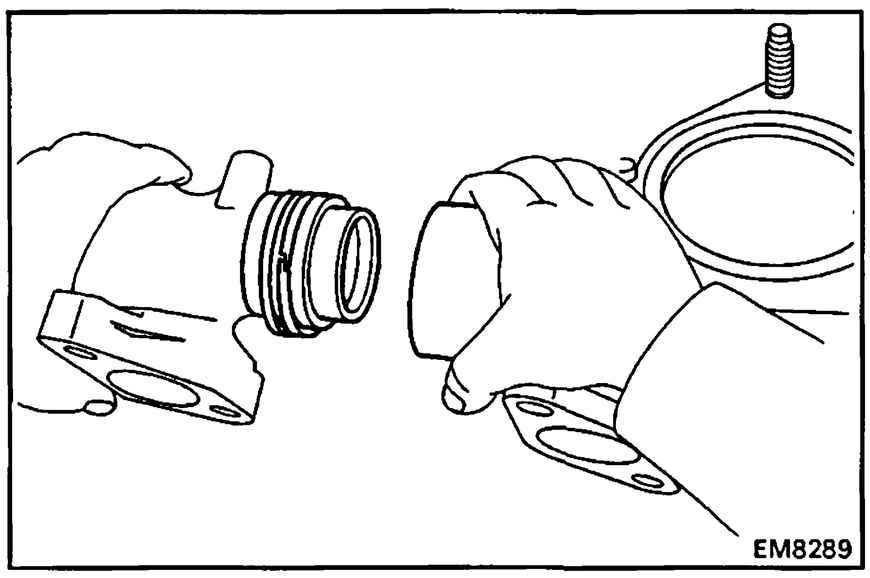

(e) Install the manifold collar.

(f) Assembly the front and rear manifolds.

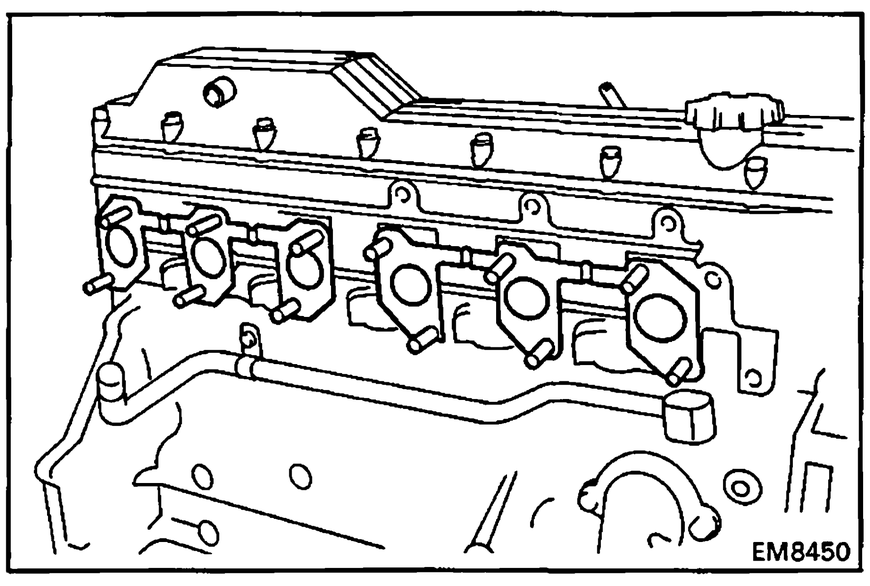

9. (1PZ and 1HZ)
INSTALL EXHAUST MANIFOLD

(a) Install new gaskets in direction as shown in the illustration.

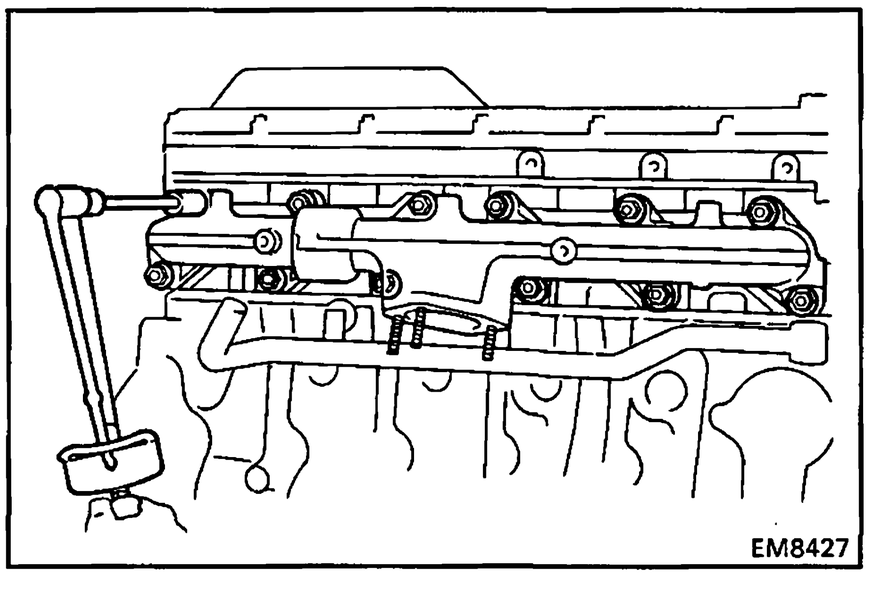

(b) Install the exhaust manifold with the ten nuts (1PZ) or twelve nuts (1HZ).

Torque: 400 kg-cm (29 ft-lb, 39 N·m)

HINT: Apply 330 kg-cm (24 ft-lb, 32 N·m) of torque when performing additional tightening of loosed nuts.

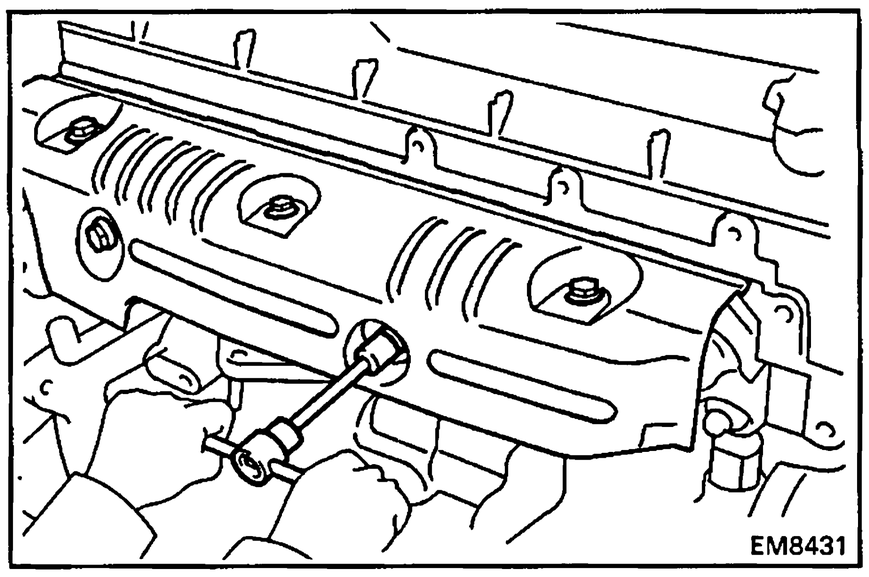

(c) Install the heat insulator with the four bolts (1PZ) or five bolts (1HZ).

10. (1HD-T)
INSTALL TURBOCHARGER AND EXHAUST MANIFOLD
(See steps 4 to 10 on pages TC-13 to 15)

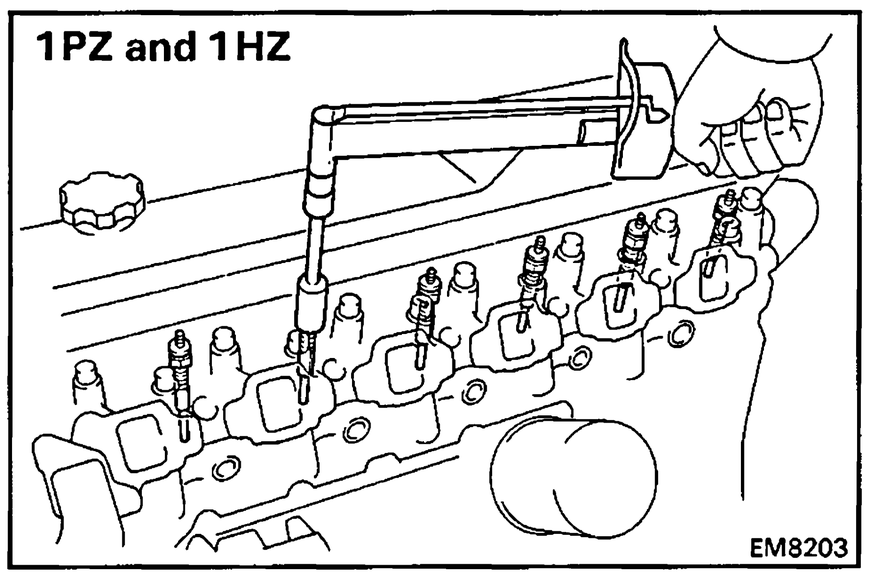

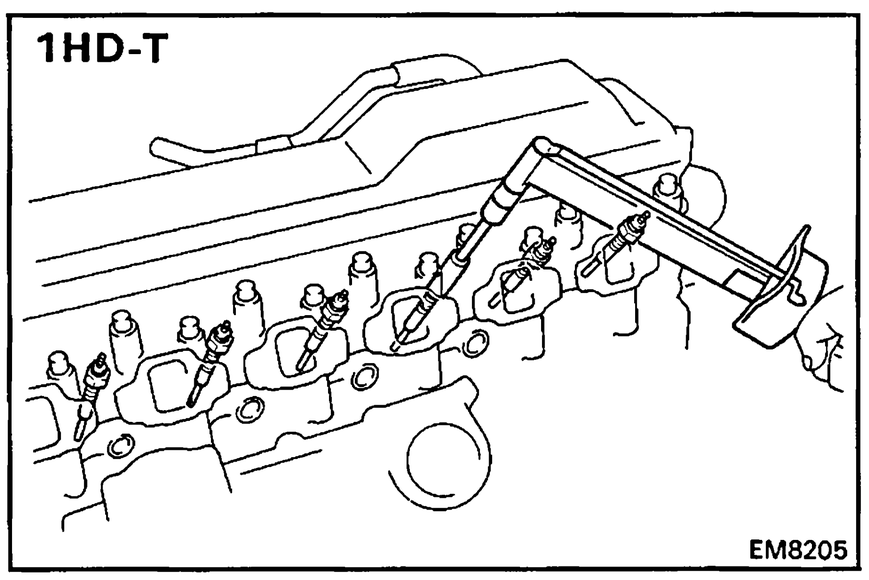

11. INSTALL GLOW PLUG

(a) Using a 12 mm deep socket wrench, install the five glow plugs (1PZ) or six glow plugs (1HZ and 1HD-T).

Torque: 130 kg-cm (9 ft-lb, 13 N·m)

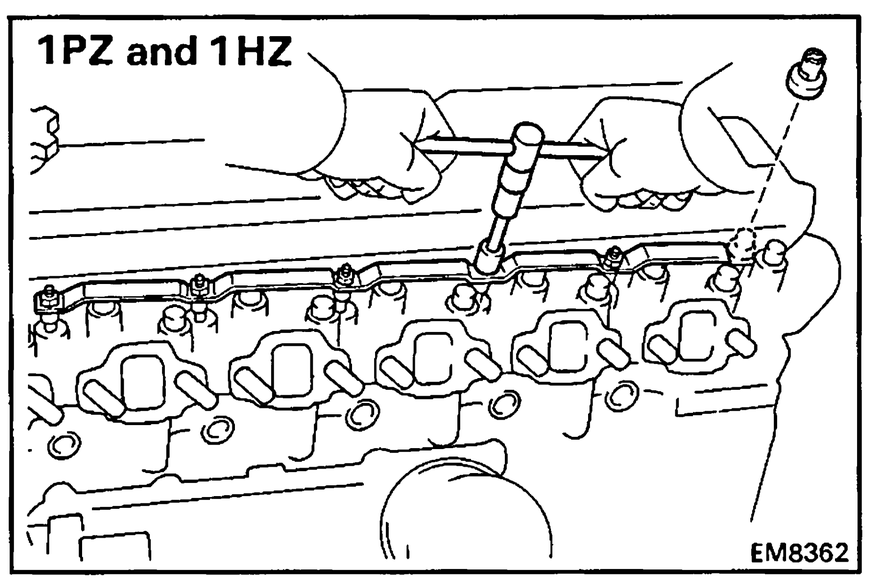

(b) Install the glow plug connector with the five nuts (1PZ) or six nuts (1HZ and 1HD-T).

(c) Install the five screw grommets (1PZ) and six screw grommets (1HZ and 1HD-T).

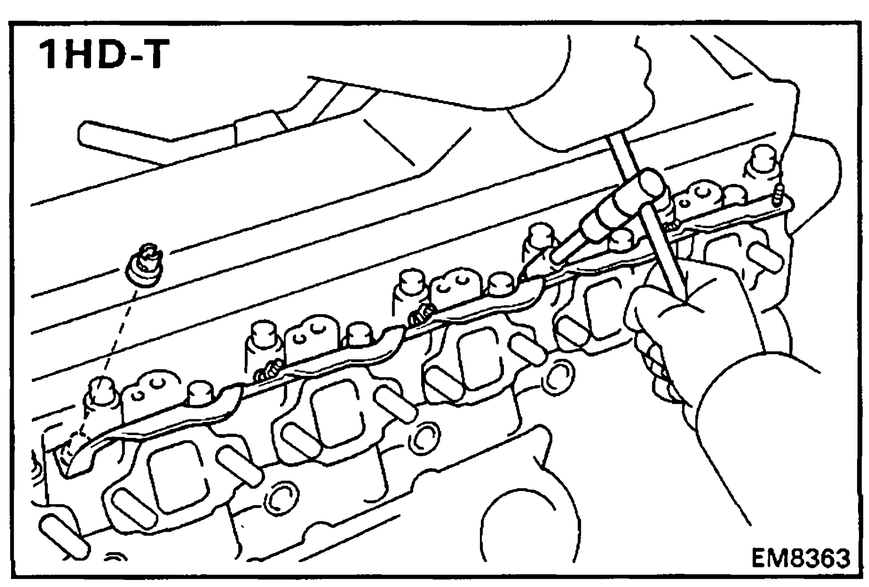

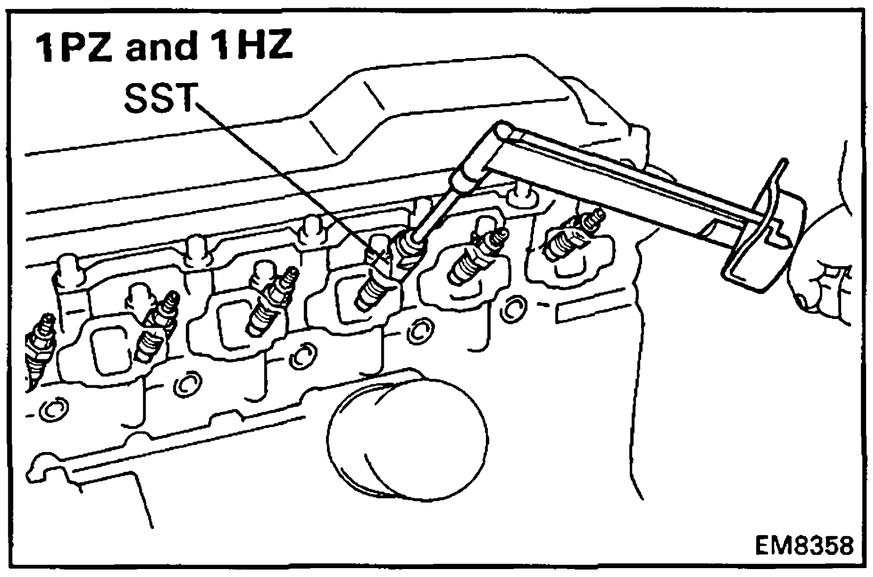

12. INSTALL INJECTION NOZZLES (1PZ and 1HZ)

(a) Place new gaskets and the nozzle seats into the injection nozzle holes of the cylinder head.

(b) Using SST, install the injection nozzles.

SST 09268-64010

Torque: 650 kg-cm (47 ft-lb, 64 N·m)

NOTICE: Over torquing could cause nozzle deformation and needle adhesion or other defects.

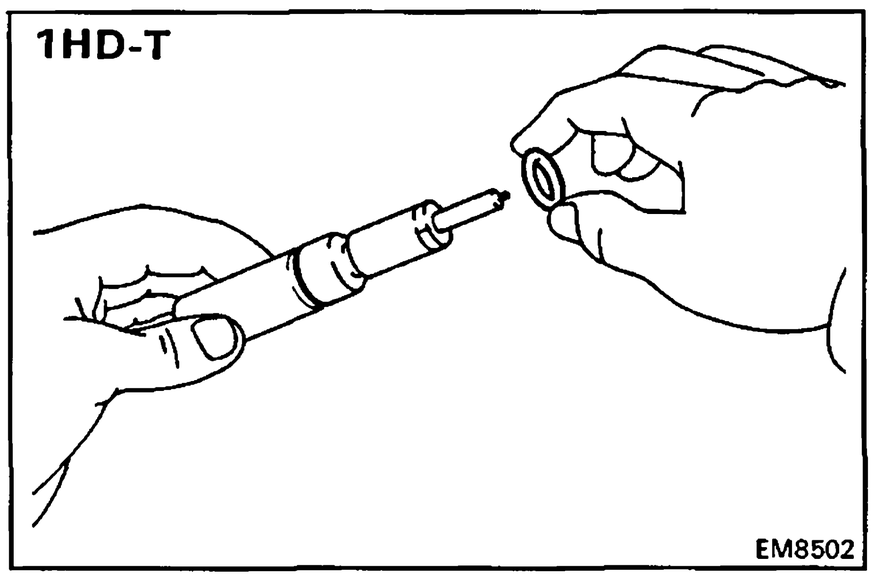

(1HD-T)

(a) Install a new O-ring to the injection nozzle.

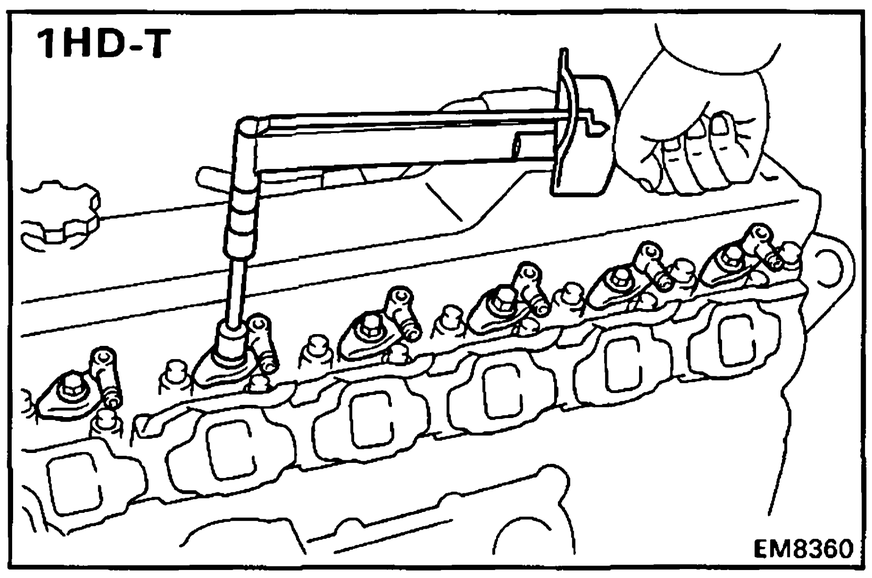

(b) Place new nozzle seats into the injection nozzle holes of the cylinder head.

(c) Install the injection nozzles with the washer and bolt.

Torque: 400 kg-cm (29 ft-lb, 39 N·m)

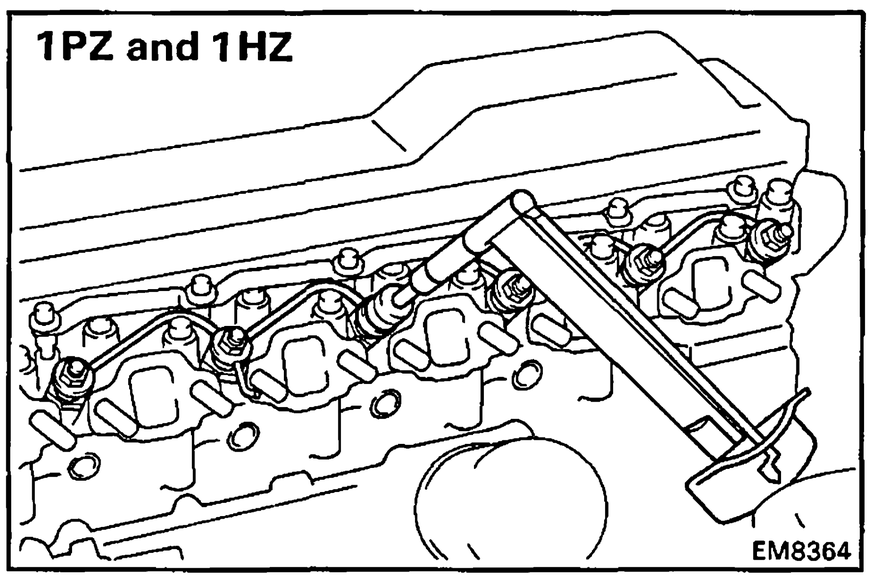

13. INSTALL NOZZLE LEAKAGE PIPE (1PZ and 1HZ)

(a) (1PZ)
Install five new gaskets and the leakage pipe with the five nuts.

Torque: 300 kg-cm (22 ft-lb, 29 N·m)

(b) (1HZ)
Install six new gaskets and the leakage pipe with the six nuts.

Torque: 300 kg-cm (22 ft-lb, 29 N·m)

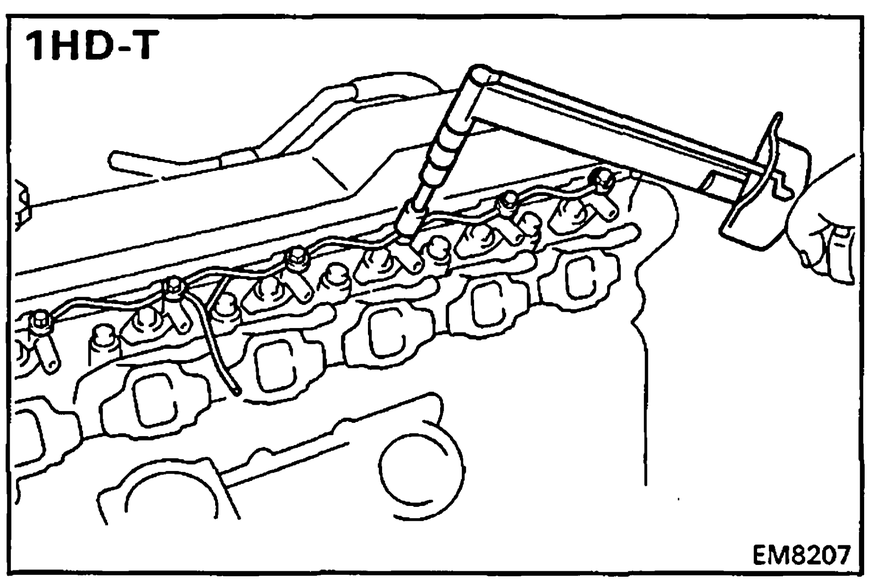

(1HD-T)

Install twelve new gaskets and the leakage pipe with the six hollow bolts.

Torque: 125 kg-cm (9 ft-lb, 12 N·m)

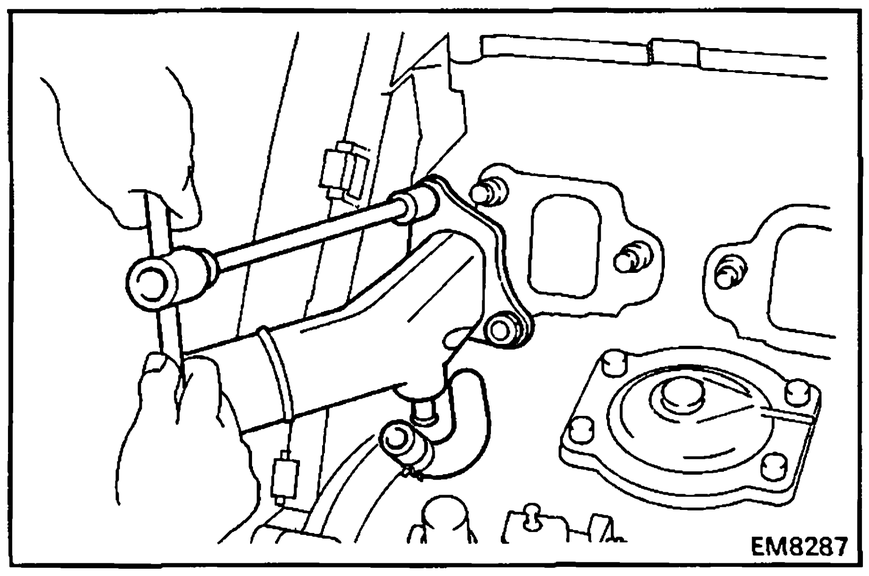

14. INSTALL WATER OUTLET

(a) Install a new gasket and water outlet with the two nuts.

Torque: 200 kg-cm (14 ft-lb, 20 N·m)

(b) (1HD-T)
Connect the water by-pass hose.

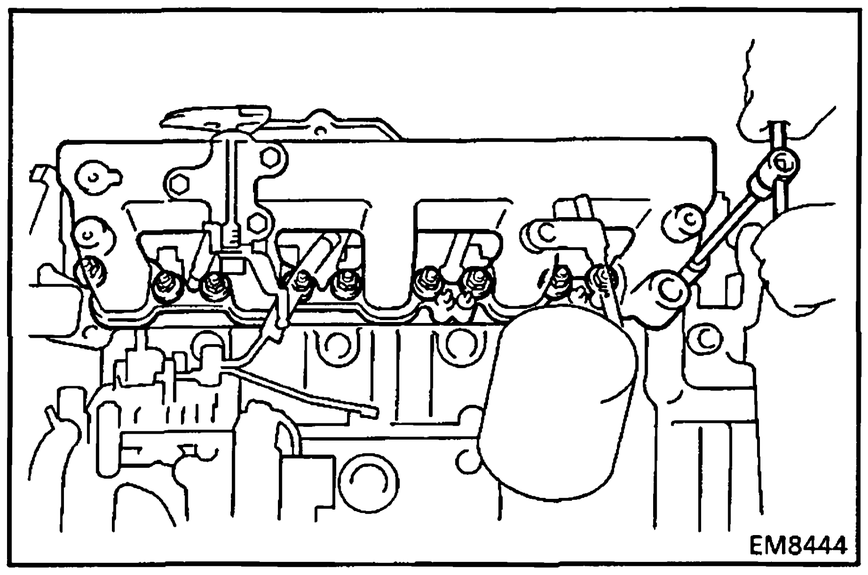

15. INSTALL INTAKE MANIFOLD

(a) (1PZ)
Install five new gaskets and the intake manifold with the ten bolts and seal washers.

Torque: 200 kg-cm (14 ft-lb, 20 N·m)

(b) (1HZ and 1HD-T)
Install six new gaskets and the intake manifold with the twelve bolts and seal washers.

Torque: 200 kg-cm (14 ft-lb, 20 N·m)

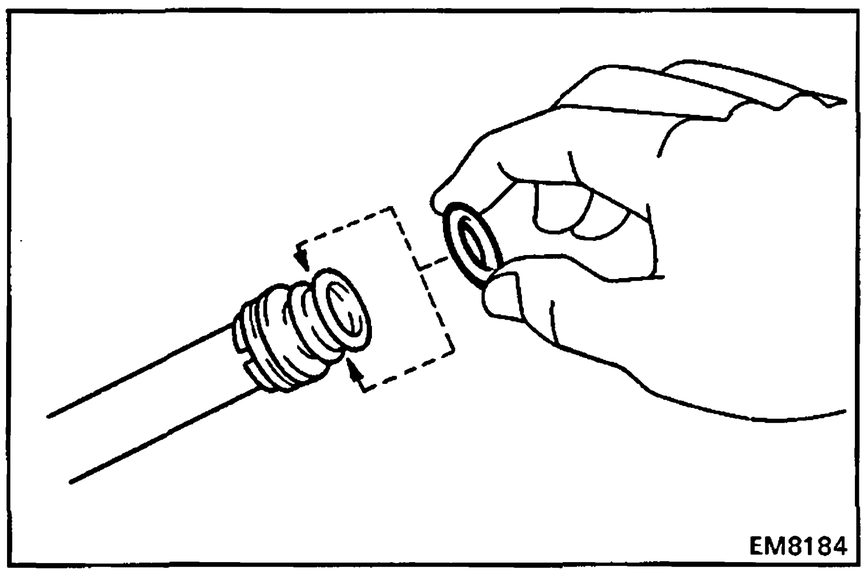

16. INSTALL OIL DIPSTICK GUIDE AND OIL DIPSTICK

(a) Install a new O-ring to the dipstick guide.

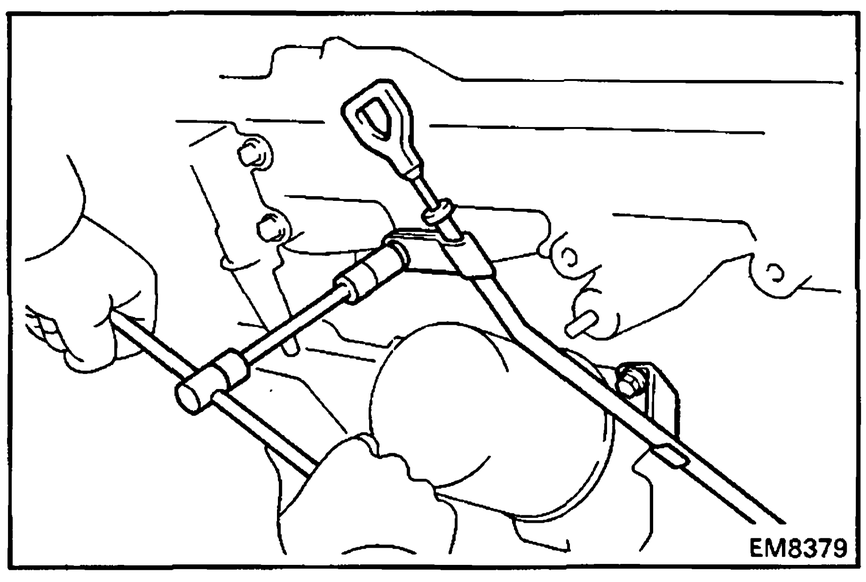

(b) Install the oil dipstick guide assembly with the two bolts.

Torque:
Intake manifold side
200 kg-cm (14 ft-lb, 20 N·m)
Oil cooler cover side
200 kg-cm (14 ft-lb, 20 N·m)

17. INSTALL INJECTION PIPES
(See step 3 on page FU-15)

Torque:

1PZ and 1HZ	**150 kg-cm (11 ft-lb, 15 N·m)**
1HD-T	**250 kg-cm (18 ft-lb, 25 N·m)**

18. INSTALL INTAKE PIPE
(See step 2 on page EM-38)

19. FILL WIT ENGINE COOLANT (See page CO-5)

20. START ENGINE AND CHECK FOR LEAKS

21. RECHECK ENGINE COOLANT LEVEL AND OIL LEVEL

CYLINDER BLOCK

COMPONENTS

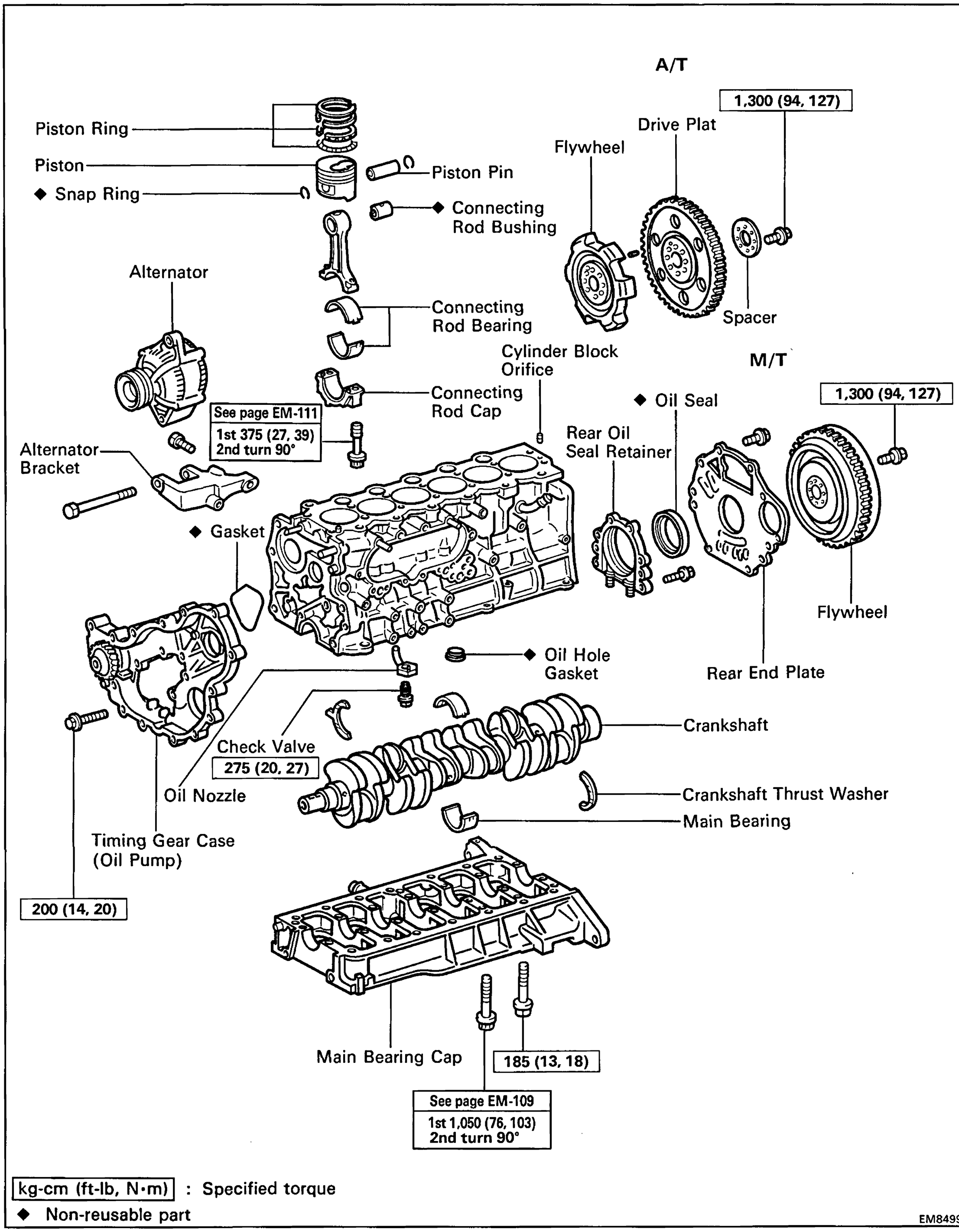

kg-cm (ft-lb, N·m) : Specified torque

◆ Non-reusable part

EM8499

PREPARATION FOR DISASSEMBLY

1. (M/T)
   REMOVE CLUTCH COVER AND DISC

2. (M/T)
   REMOVE FLYWHEEL

3. (A/T)
   REMOVE DRIVE PLATE AND FLYWHEEL

   Remove the drive plate rear spacer, drive plate and flywheel.

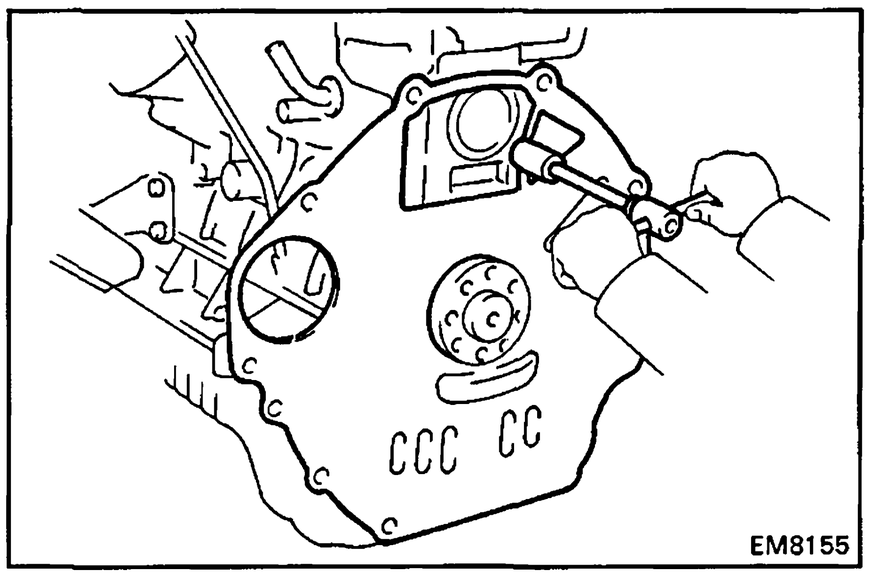

4. REMOVE REAR END PLATE

   Remove the bolt, end plate and dust cover.

5. INSTALL ENGINE TO ENGINE STAND FOR DISASSEMBLY

6. REMOVE TIMING BELT AND PULLEYS (See page EM-33)

7. REMOVE CYLINDER HEAD (See page EM-55)

8. REMOVE WATER PUMP (See page CO-6)

9. REMOVE ALTERNATOR

10. REMOVE TIMING GEARS (See page EM-43)

11. REMOVE INJECTION PUMP (See page FU-27)

12. REMOVE OIL PAN AND TIMING GEAR CASE (OIL PUMP) (See page LU-8)

13. REMOVE OIL COOLER (See page LU-14)

14. REMOVE WATER INLET AND THERMOSTAT

15. REMOVE ENGINE MOUNTING

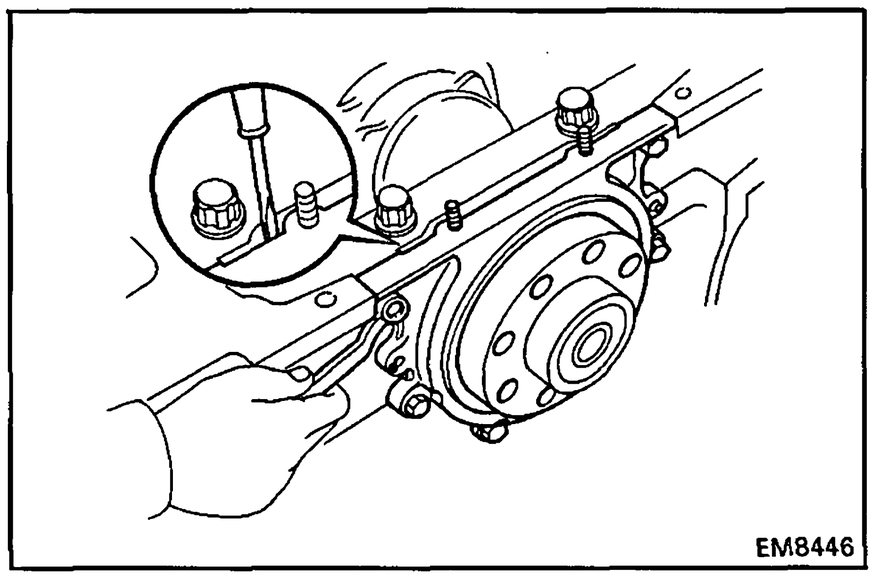

DISASSEMBLY OF CYLINDER BLOCK

(See page EM-84)

1. REMOVE REAR OIL SEAL RETAINER

Remove the six bolts and retainer.

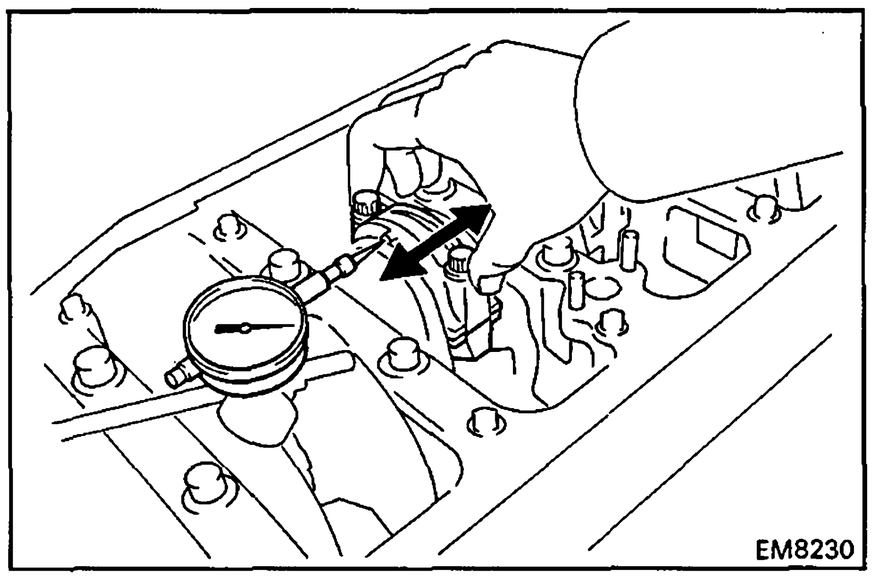

2. CHECK CONNECTING ROD THRUST CLEARANCE

Using a dial indicator, measure the thrust clearance while moving the connecting rod back and forth.

Standard thrust clearance: **0.10 – 0.20 mm (0.0038 – 0.0079 in.)**

Maximum thrust clearance: **0.30 mm (0.0118 in.)**

If the thrust clearance is greater than maximum, replace the connecting rod assembly. If necessary, replace the crankshaft.

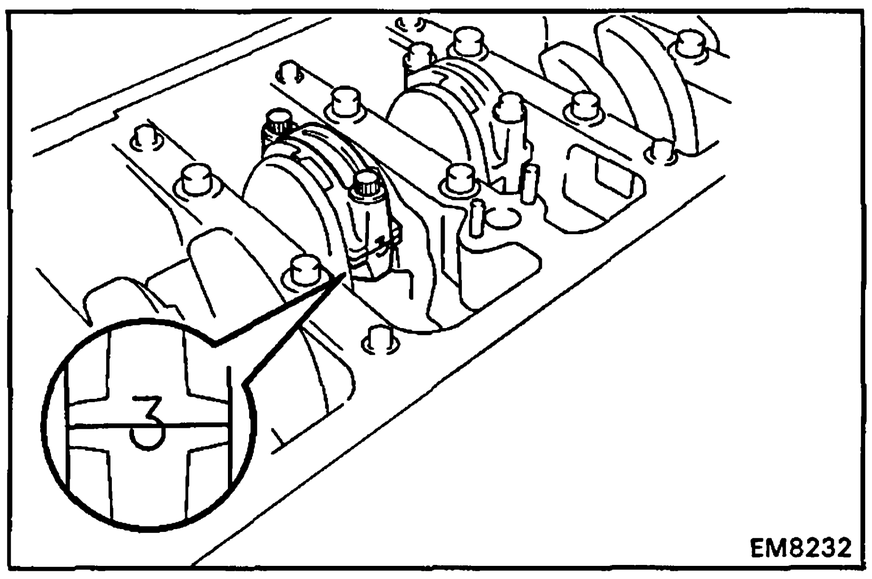

3. REMOVE CONNECTING ROD CAPS AND CHECK OIL CLEARANCE

(a) Using paint, place the matchmarks on the connecting rod and cap to ensure correct reassembly.

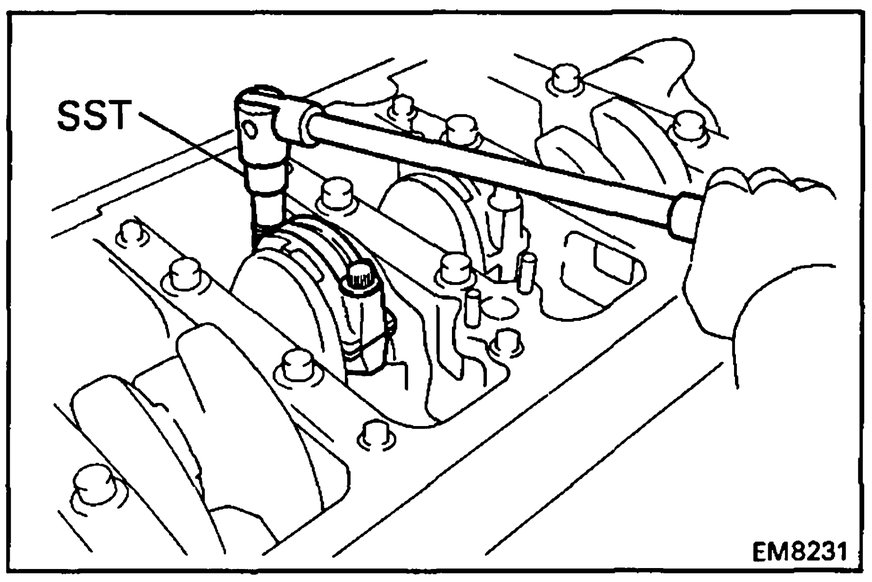

(b) Using SST, remove the connecting rod cap bolts.

SST 09011-38121

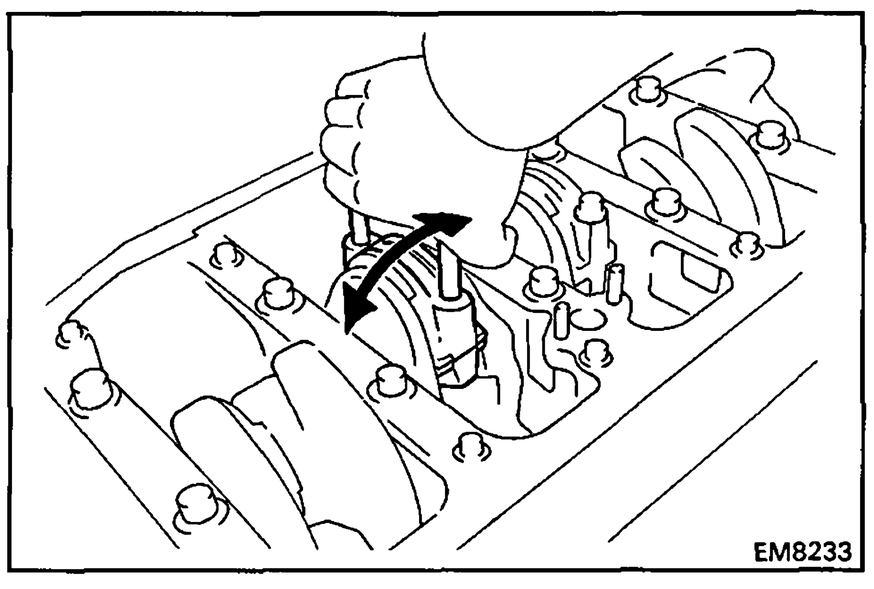

(c) Using the removed connecting rod cap bolts, pry the connecting rod cap back and forth, and remove the connecting cap.

HINT: Keep the lower bearing inserted with the connecting rod cap.

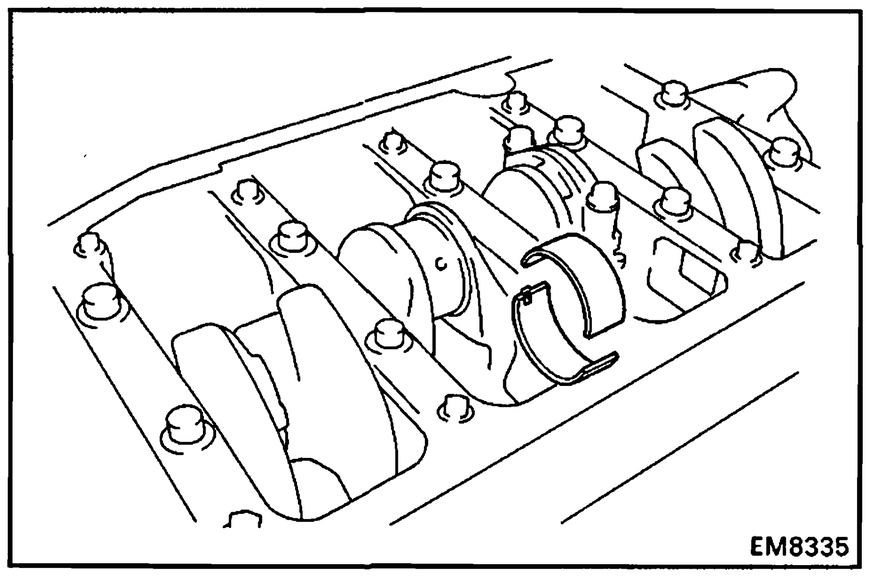

(d) Clean crank pin and bearing.

(e) Check the crank pin and bearing for pitting and scratches.

If the crank pin or bearing is damaged, replace the bearings. If necessary, grind or replace the crankshaft.

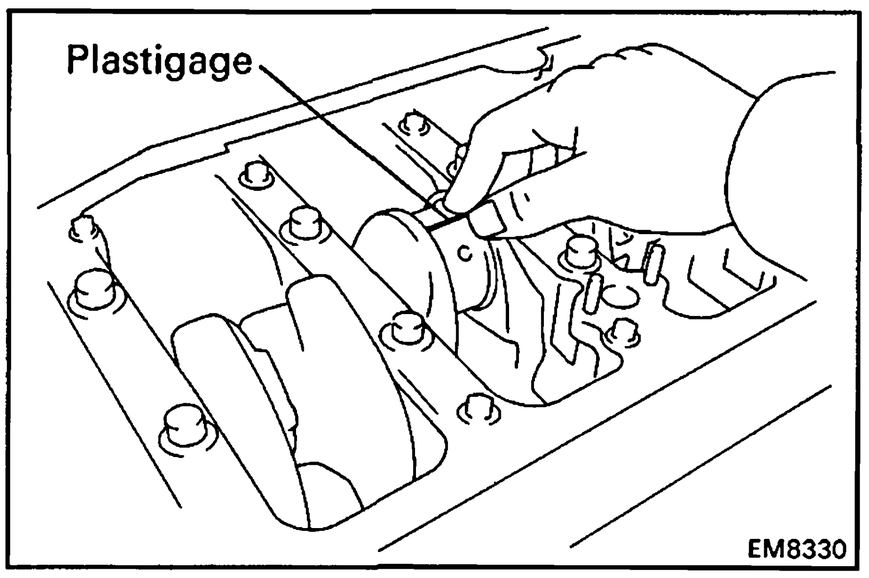

(f) Lay a strip of Plastigage across the crank pin.

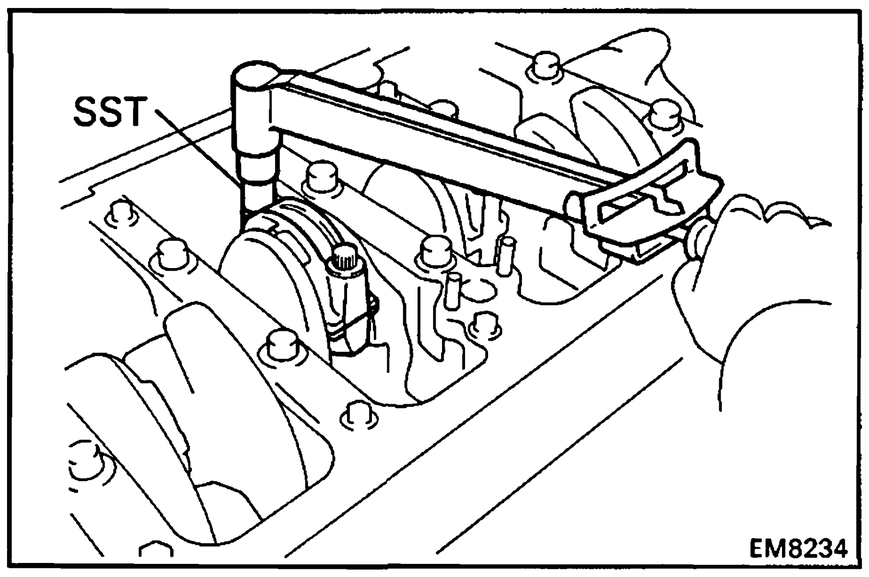

(g) Install the connecting rod cap.
(See step 8 on page EM-111)

Torque: 1st 375 kg-cm (27 ft-lb, 37 N·m)
2nd turn 90°

HINT: Do not turn the crankshaft.

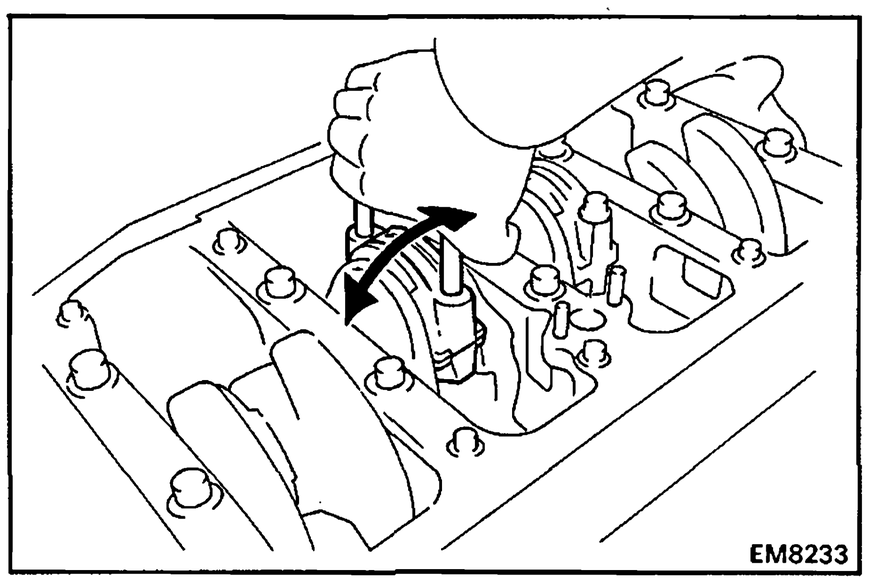

(h) Remove the connecting rod cap.
(See procedure (b) and (c) above)

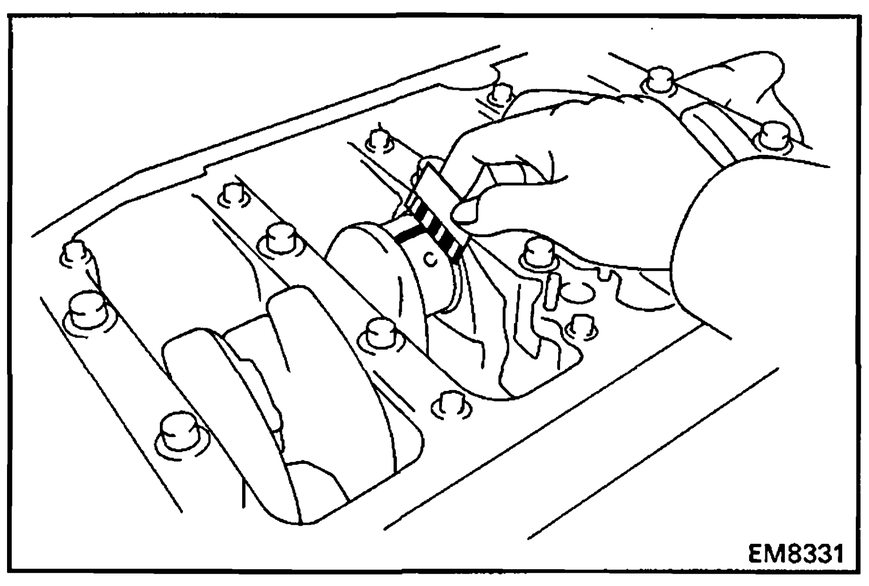

(i) Measure the Plastigage at widest point.

Standard oil clearance:
STD 0.036 – 0.054 mm
(0.0014 – 0.0021 in.)
U/S 0.25 and U/S 0.50
0.037 – 0.077 mm
(0.0015 – 0.0030 in.)

Maximum oil clearance: 0.10 mm (0.0039 in.)

If the oil clearance is greater than maximum, replace the bearings. If necessary, grind or replace the crankshaft.

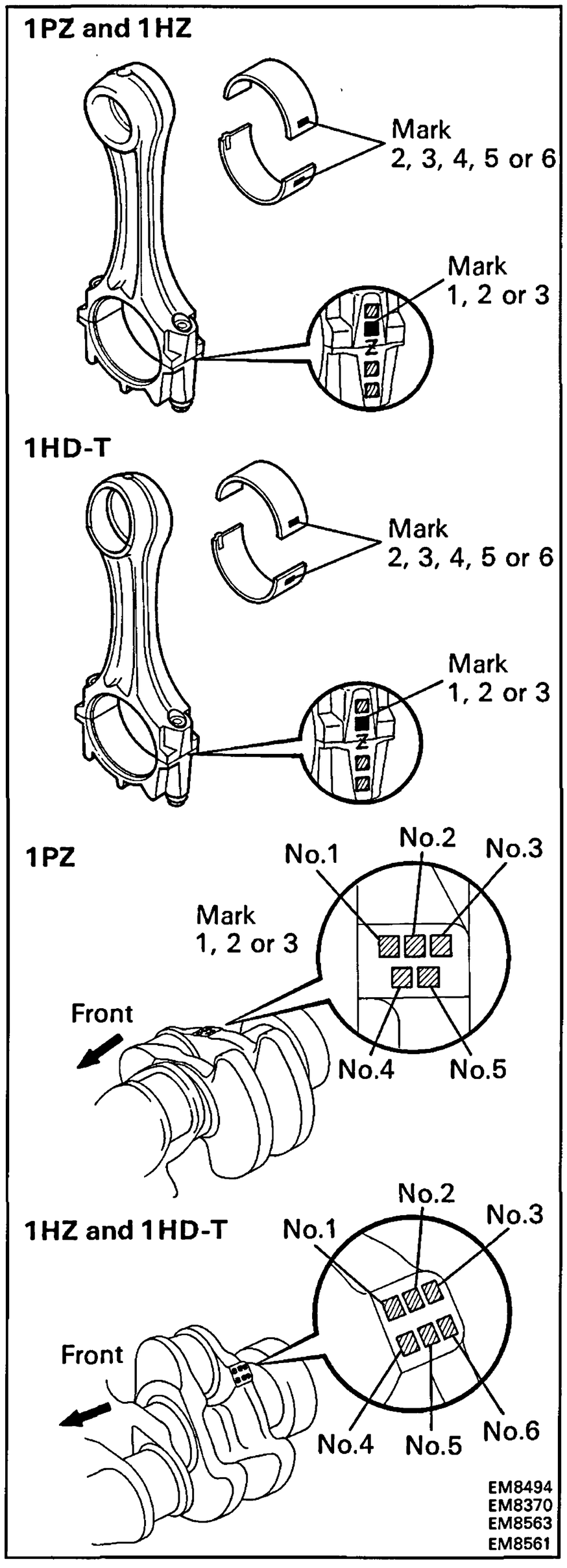

HINT: If using a standard bearing, replace with one having the same number. If the number of the bearing cannot be determined, select the correct bearing by adding together the numbers inprinted on the crankshaft and connecting rod, then selecting the bearing with the same number as the total. There are five sizes of standard bearings, marked "2", "3", "4", "5" and "6" accordingly.

	Number marked								
Connecting rod	1			2			3		
Crankshaft	1	2	3	1	2	3	1	2	3
Bearing	2	3	4	3	4	5	4	5	6

EXAMPLE: Connecting rod "2" + Crankshaft "1"
= Total number (Use bearing "3")

(Reference)

Connecting rod big end inner diameter:

Mark "1" 62.014 – 62.020 mm (2.4415 – 2.4417 in.)
Mark "2" 62.020 – 62.026 mm (2.4417 – 2.4420 in.)
Mark "3" 62.026 – 62.032 mm (2.4420 – 2.4422 in.)

Crankshaft pin diameter:

Mark "1" 58.994 – 59.000 mm (2.3226 – 2.3228 in.)
Mark "2" 58.988 – 58.994 mm (2.3224 – 2.3226 in.)
Mark "3" 58.982 – 58.988 mm (2.3221 – 2.3224 in.)

Standard sized bearing center wall thickness:

Mark "2" 1.486 – 1.489 mm (0.0585 – 0.0586 in.)
Mark "3" 1.489 – 1.492 mm (0.0586 – 0.0587 in.)
Mark "4" 1.492 – 1.495 mm (0.0587 – 0.0589 in.)
Mark "5" 1.495 – 1.498 mm (0.0589 – 0.0590 in.)
Mark "6" 1.498 – 1.501 mm (0.0590 – 0.0591 in.)

(j) Completely remove the Plastigage.

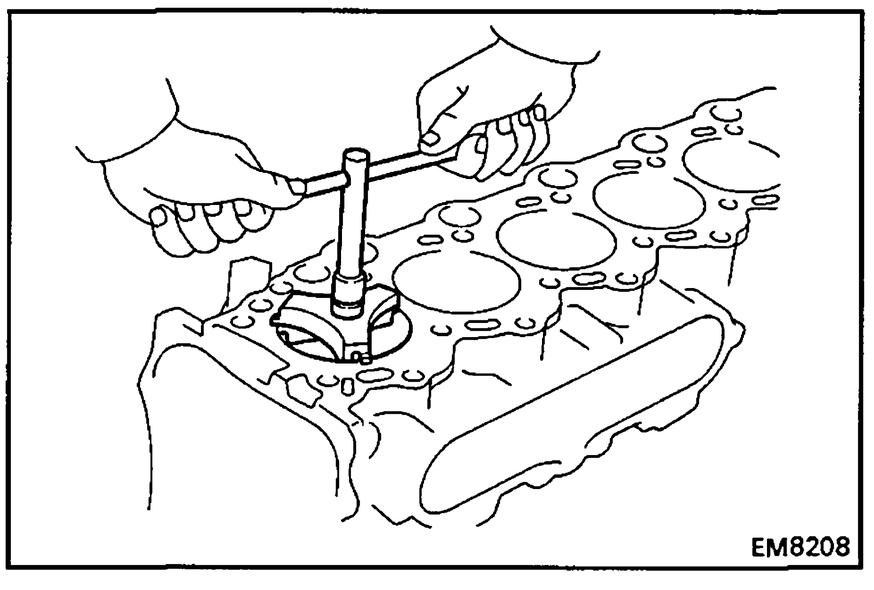

4. REMOVE PISTON AND CONNECTING ROD ASSEMBLIES

(a) Remove the all carbon from the top of the cylinder.

(b) Push the piston, connecting rod assembly and upper bearing through the top of the cylinder block.

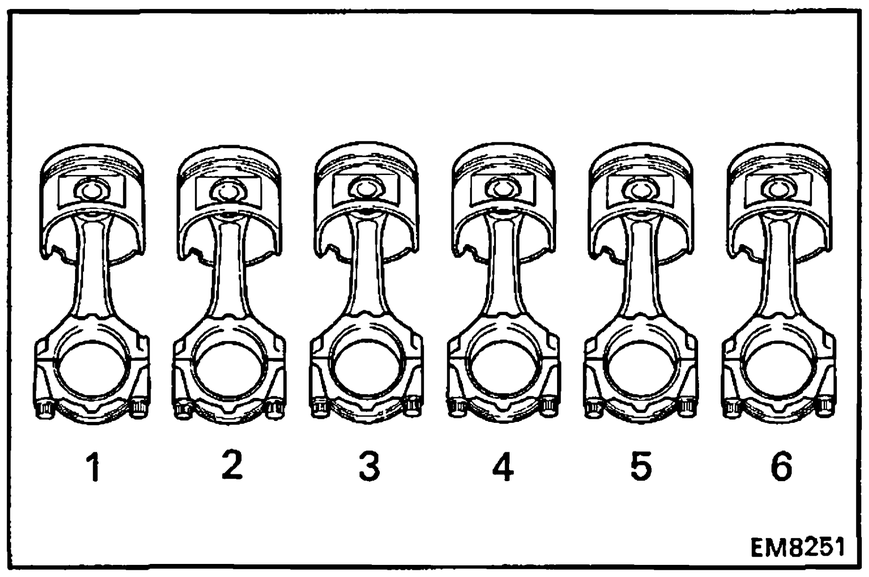

HINT:
- Keep the bearings, connecting rod and cap together.
- Arrange the piston and connecting rod assemblies in correct order.

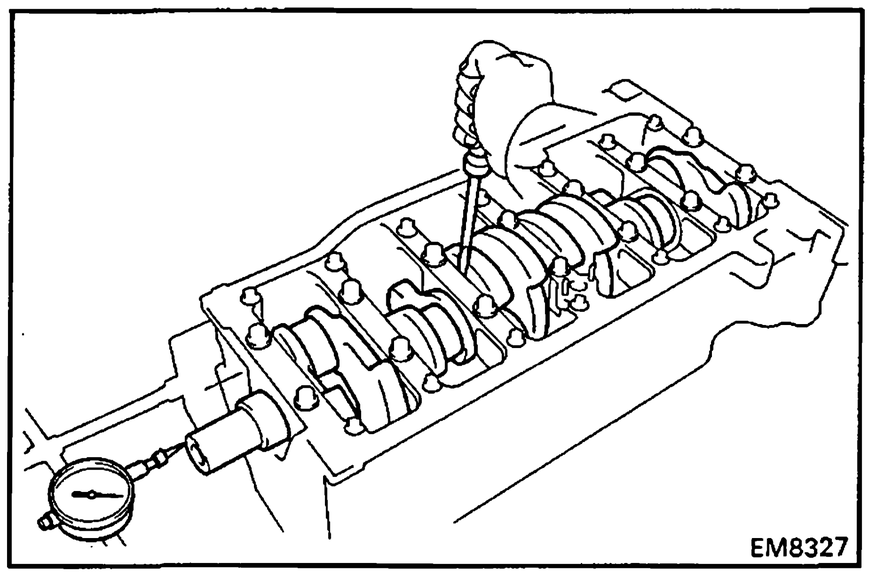

5. CHECK CRANKSHAFT THRUST CLEARANCE

Using a dial indicator, measure the thrust clearance while prying the crankshaft back and forth with a screwdriver.

Standard thrust clearance: 0.04 – 0.24 mm (0.0016 – 0.0094 in.)

Maximum thrust clearance: 0.30 mm (0.0118 in.)

If the thrust clearance is greater than maximum, replace the thrust washers as a set.

Thrust washer thickness:
2.930 – 2.980 mm (0.1154 – 0.1173 in.)

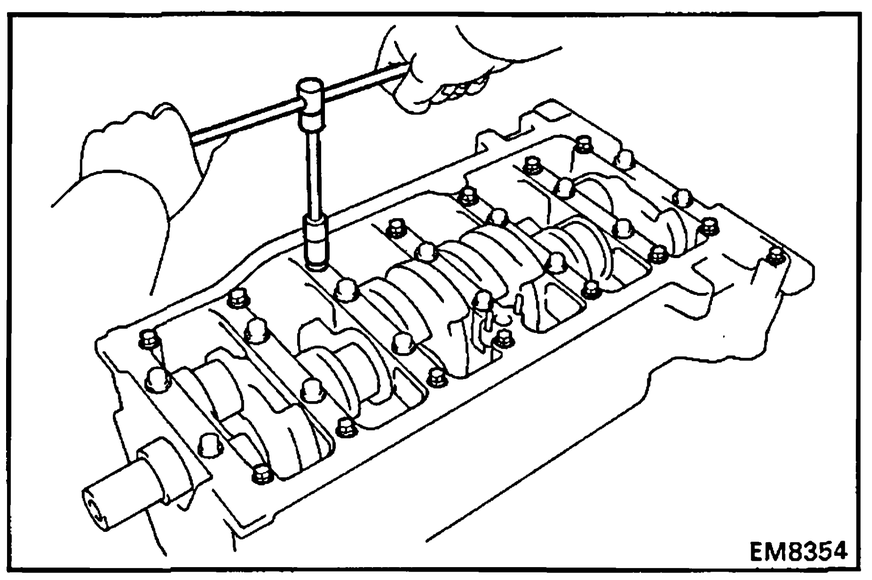

6. REMOVE MAIN BEARING CAP AND CHECK OIL CLEARANCE

(a) Remove the thirteen bolts (1PZ) or fifteen bolts (1HZ and 1HD-T).

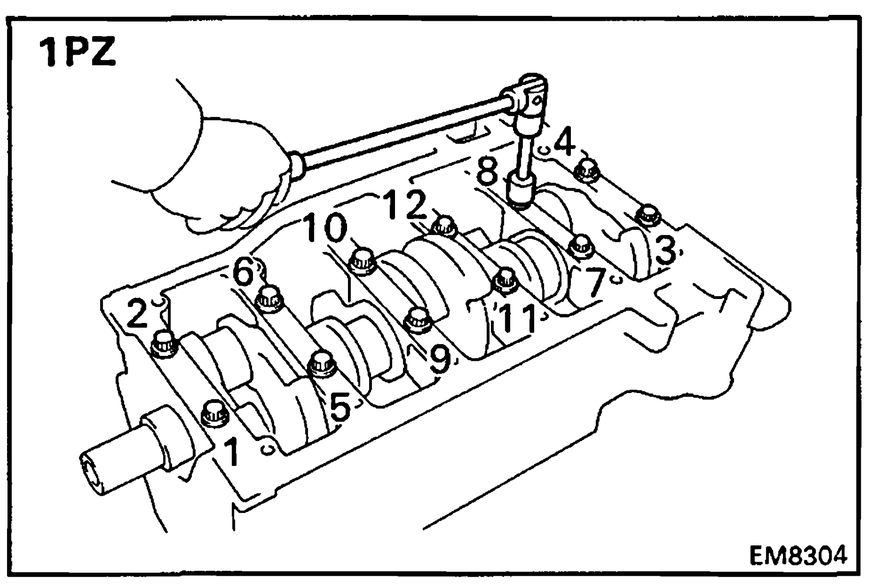

(b) Uniformly loosen and remove the main bearing cap bolts in several passes in the sequence shown.

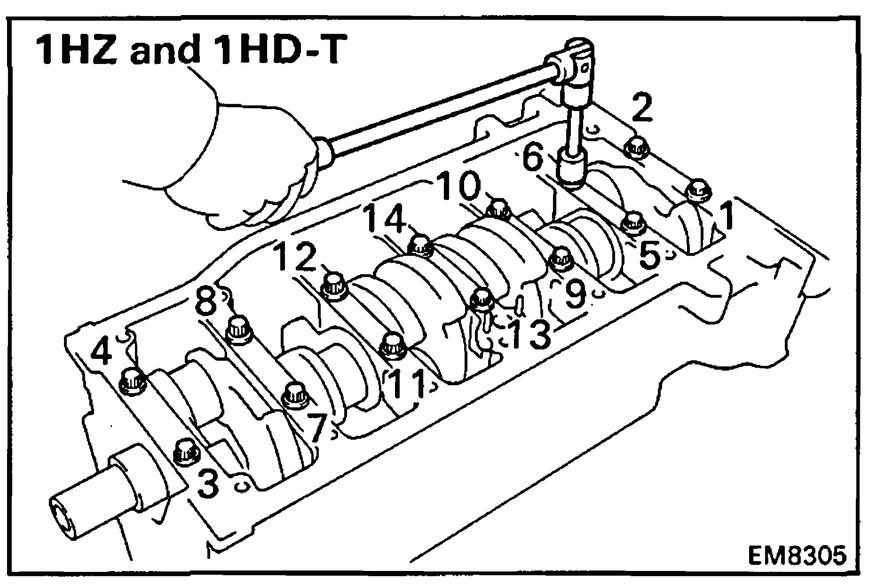

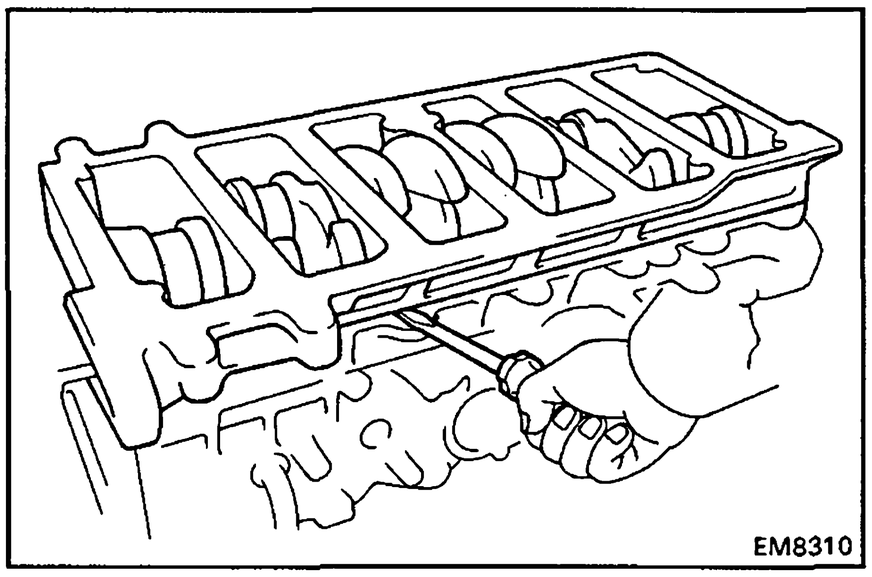

(c) Using a screwdriver, pry out the main bearing cap.

HINT: Keep the lower main bearings and main bearing cap together.

NOTICE: Do not scratch the surface which will be coated with FIPG.

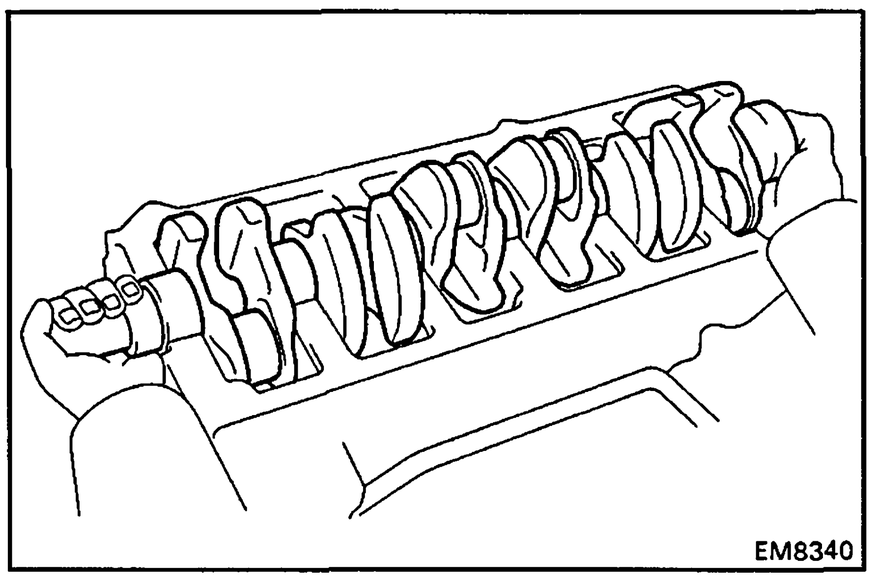

(d) Lift out the crankshaft.

HINT: Keep the upper main bearings and thrust washers together with the cylinder block.

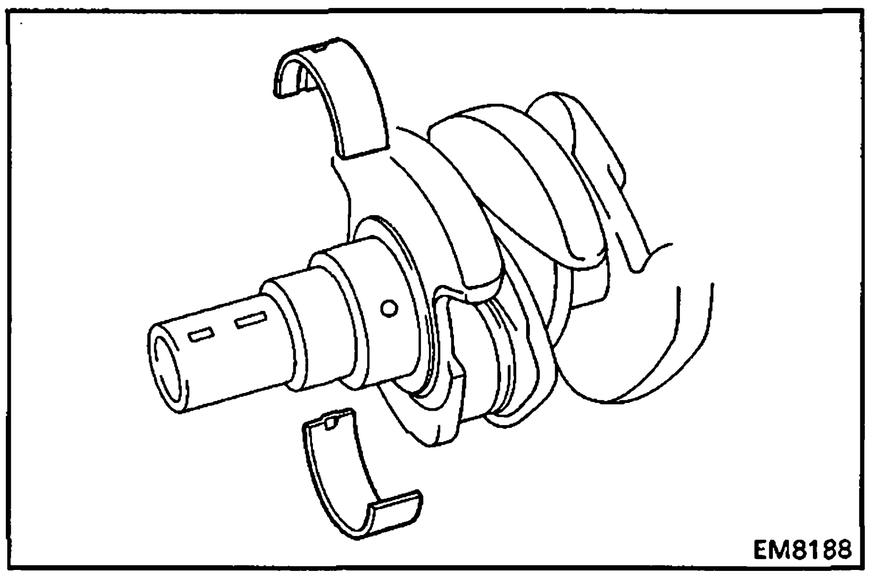

(e) Clean each main journal and bearing.

(f) Check each main journal and bearing for pitting and scratches.

If the journal or bearing are damaged, replace the bearings. If necessary, grind or replace the crankshaft.

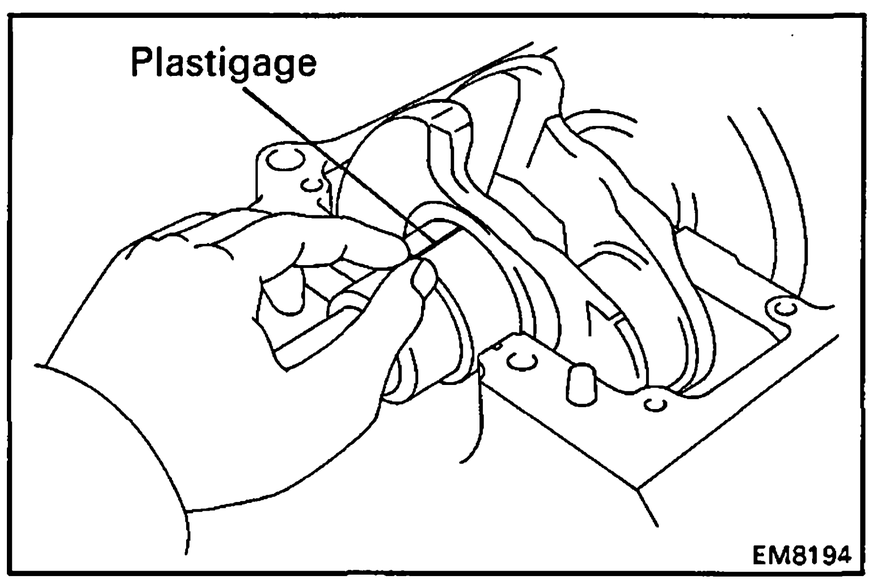

(g) Place the crankshaft on the cylinder block.

(h) Lay a strip of Plastigage across each journal.

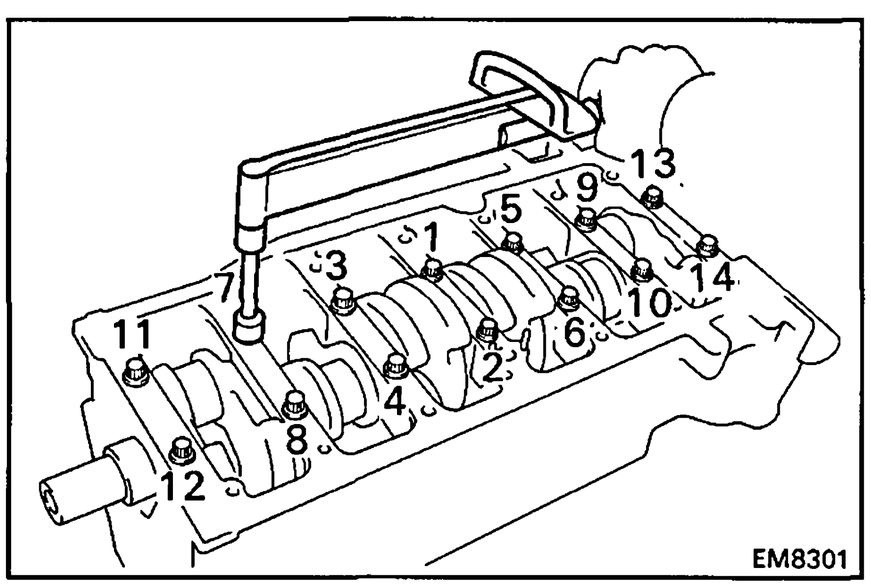

(i) Install the main bearing cap with the bearings. (See step 6 on page EM-109)

Torque: 1st 1,050 kg-cm (76 ft-lb, 103 N·m)
2nd turn 90°

HINT: Do not turn the crankshaft.

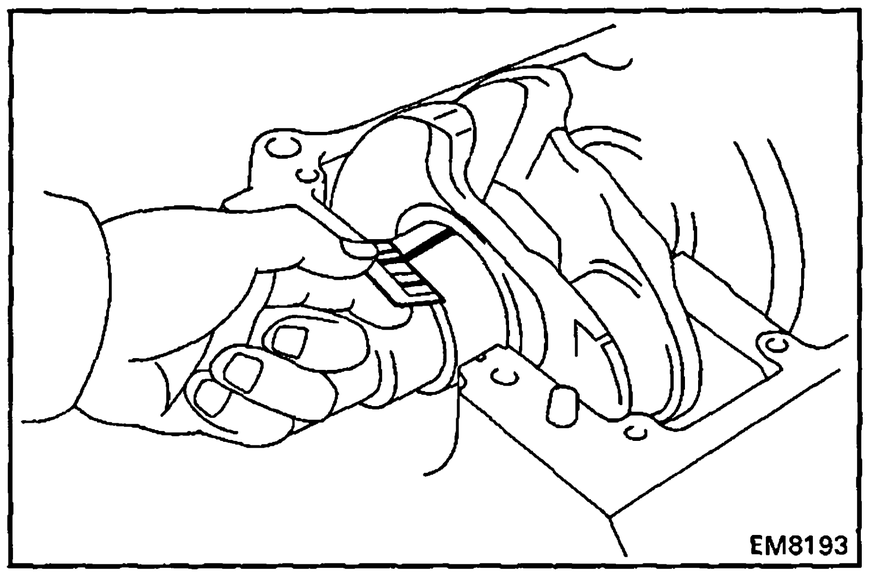

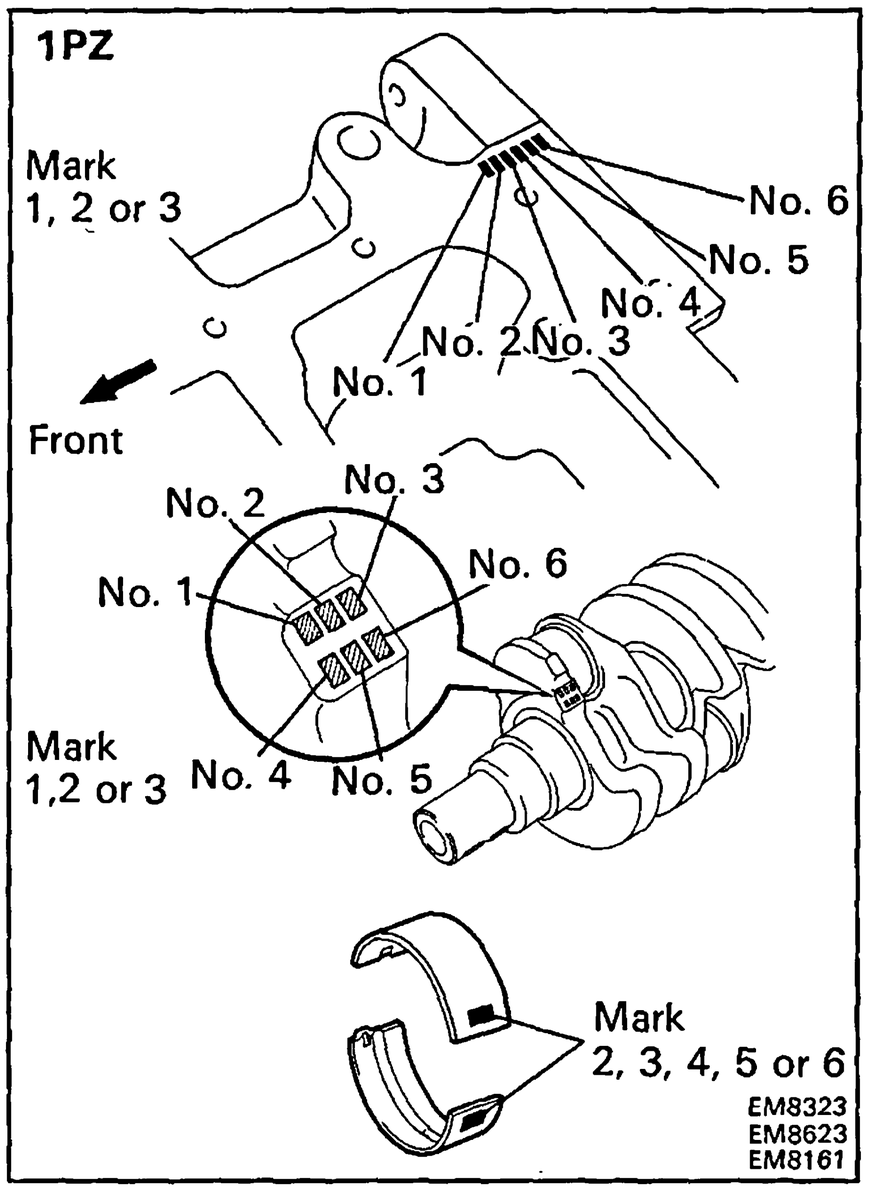

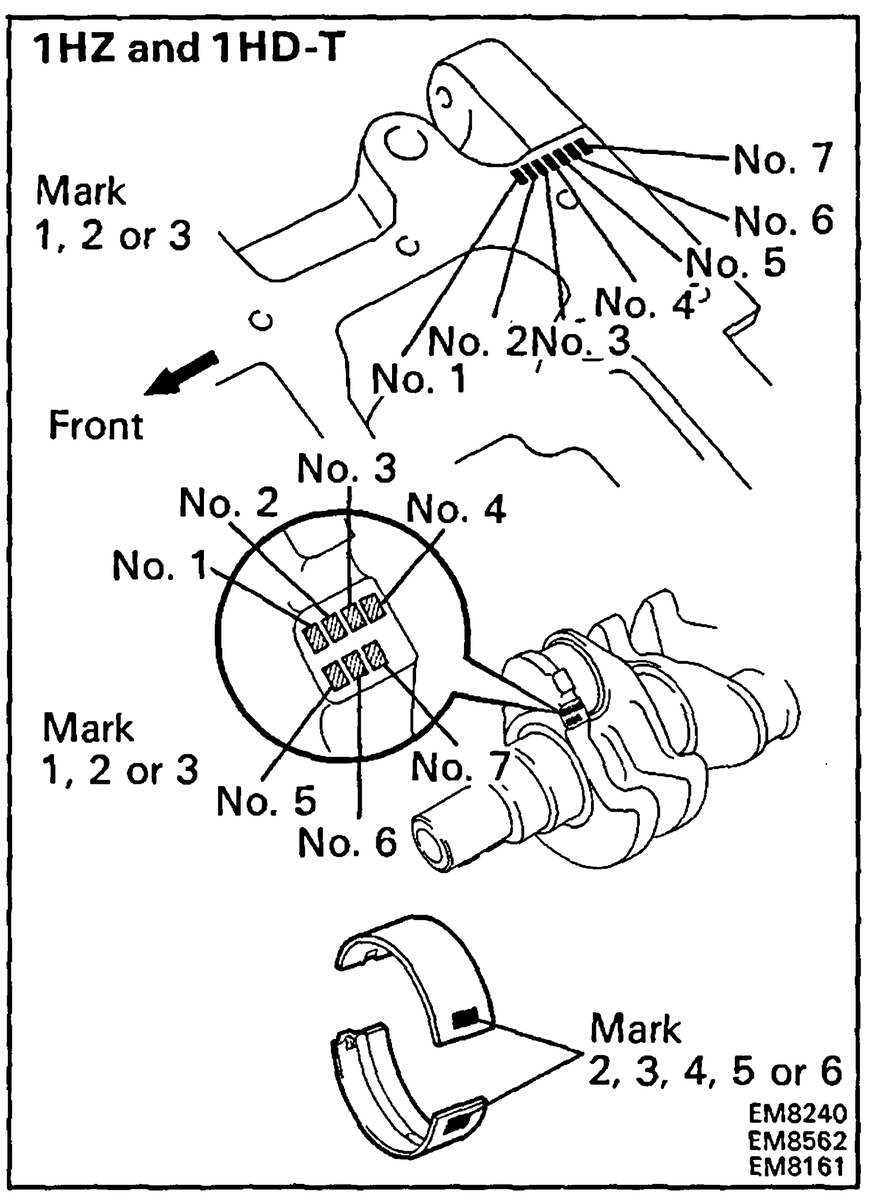

(j) Remove the main bearing cap bolts and cap.

(k) Measure the Plastigage at its widest point.

Standard clearance:

STD	**0.036 – 0.054 mm (0.0014 – 0.0021 in.)**
U/S 0.25 and U/S 0.50	**0.037 – 0.077 mm (0.0015 – 0.0030 in.)**

Maximum clearance: 0.10 mm (0.0039 in.)

If the oil clearance is greater than maximum, replace the bearings. If necessary, grind or replace the crankshaft.

HINT: If using a standard bearing, replace with one having the same number. If the number of the bearing cannot be determined, select the correct bearing by adding together the numbers inprinted on the main bearing cap and crankshaft, then selecting the bearing with the same number as the total. There are five sizes of standard bearings, marked "2", "3", "4", "5" and "6" accordingly.

	Number marked								
Main bearing cap	1			2			3		
Crankshaft	1	2	3	1	2	3	1	2	3
Bearing	2	3	4	3	4	5	4	5	6

EXAMPLE: Main bearing cap "2"" + Crankshaft "1" = Total number (Use bearing "3")

(Reference)

Cylinder block main journal bore diameter:

Mark "1" 71.000 – 71.006 mm (2.7953 – 2.7955 in.)
Mark "2" 71.006 – 71.012 mm (2.7955 – 2.7957 in.)
Mark "3" 71.012 – 71.018 mm (2.7957 – 2.7960 in.)

Crankshaft journal diameter:

Mark "1" 66.994 – 67.000 mm (2.6376 – 2.6378 in.)
Mark "2" 66.988 – 66.994 mm (2.6373 – 2.6376 in.)
Mark "3" 66.982 – 66.988 mm (2.6371 – 2.6373 in.)

(Reference) (Cont'd)
Standard sized bearing center wall thickness:

Mark "2"	**1.979 – 1.982 mm (0.0779 – 0.0780 in.)**
Mark "3"	**1.982 – 1.985 mm (0.0780 – 0.0781 in.)**
Mark "4"	**1.985 – 1.988 mm (0.0781 – 0.0783 in.)**
Mark "5"	**1.988 – 1.991 mm (0.0783 – 0.0784 in.)**
Mark "6"	**1.991 – 1.994 mm (0.0784 – 0.0785 in.)**

(l) Completely remove the Plastigage.

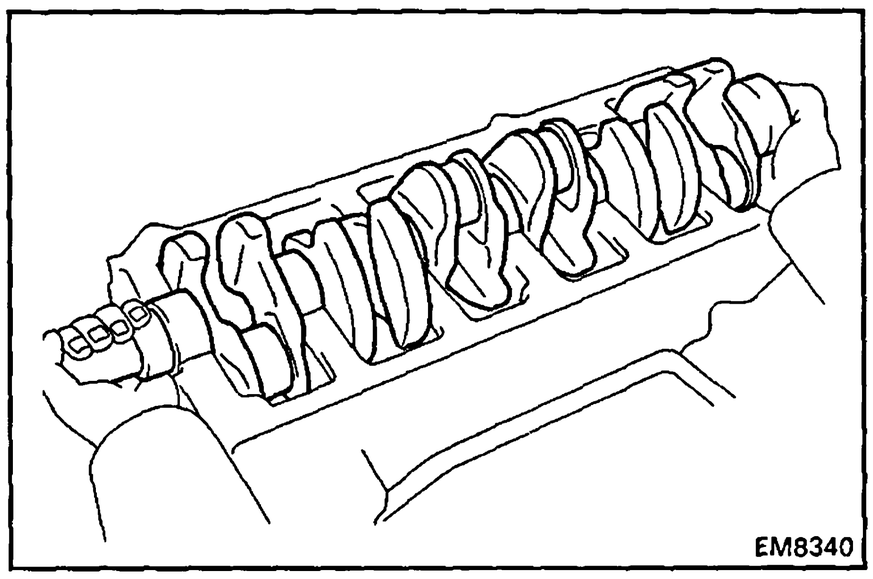
EM8340

7. REMOVE CRANKSHAFT

(a) Lift out the crankshaft.

(b) Remove the upper main bearings and thrust washers from the cylinder block.

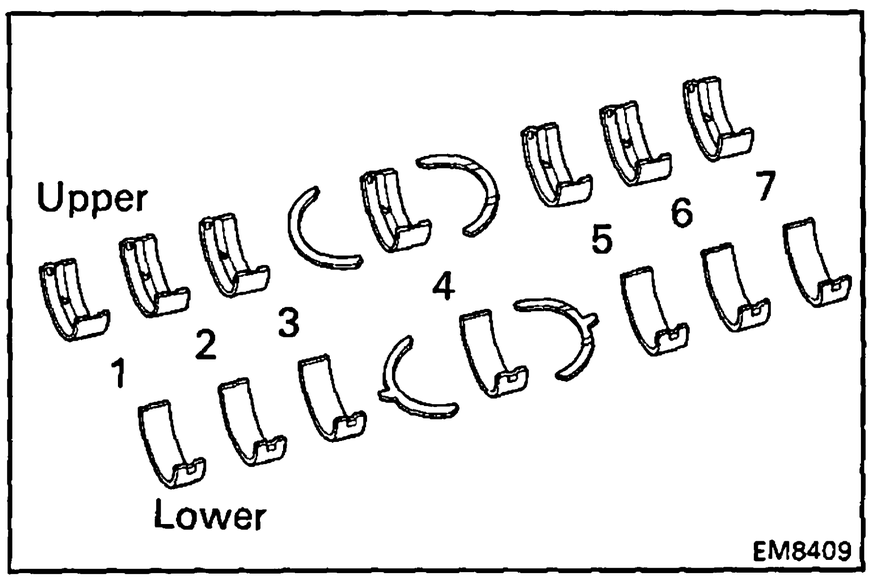

EM8409

HINT: Arrange the main bearings and thrust washers in correct order.

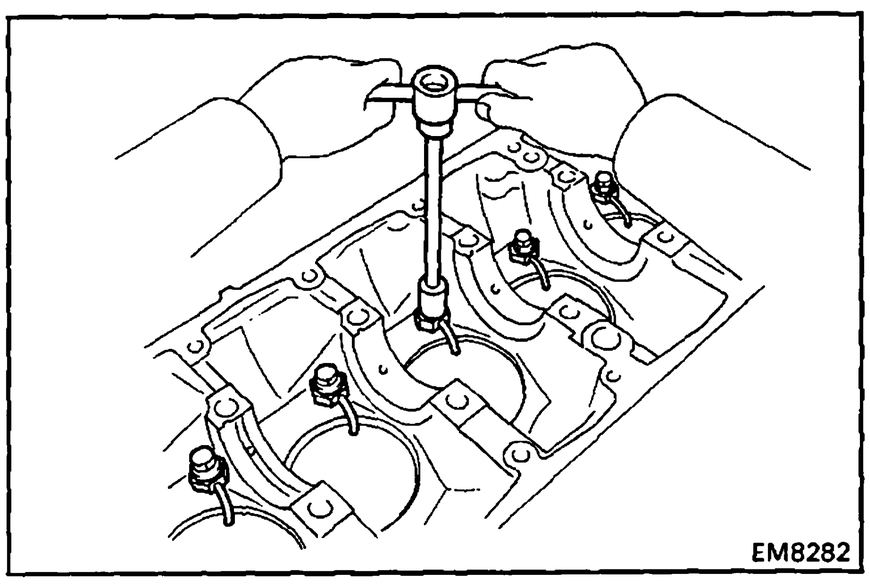
EM8282

8. REMOVE CHECK VALVES AND OIL NOZZLES

Remove the five (1PZ) or six (1HZ and 1HD-T) check valves and oil nozzles.

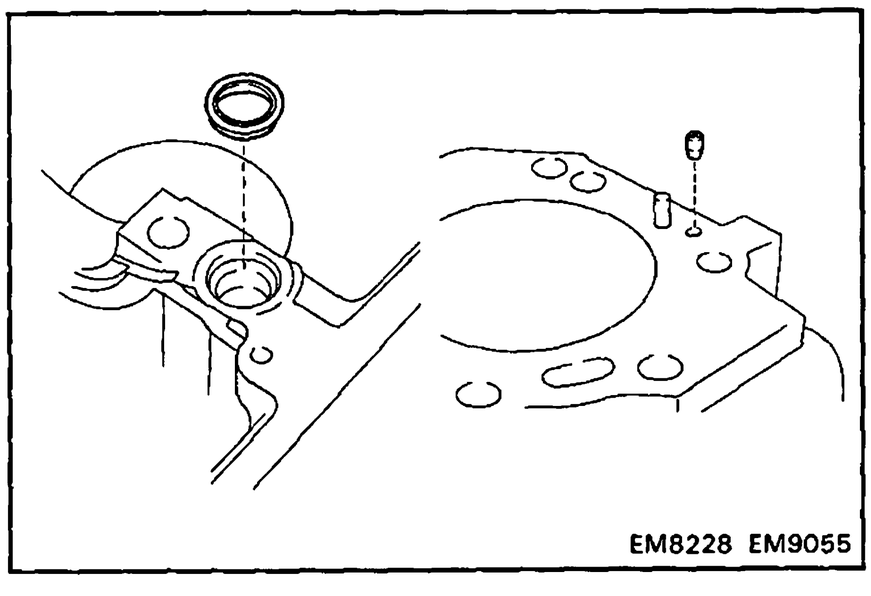
EM8228 EM9055

9. REMOVE CYLINDER BLOCK OIL HOLE GASKET

10. REMOVE CYLINDER BLOCK ORIFICE

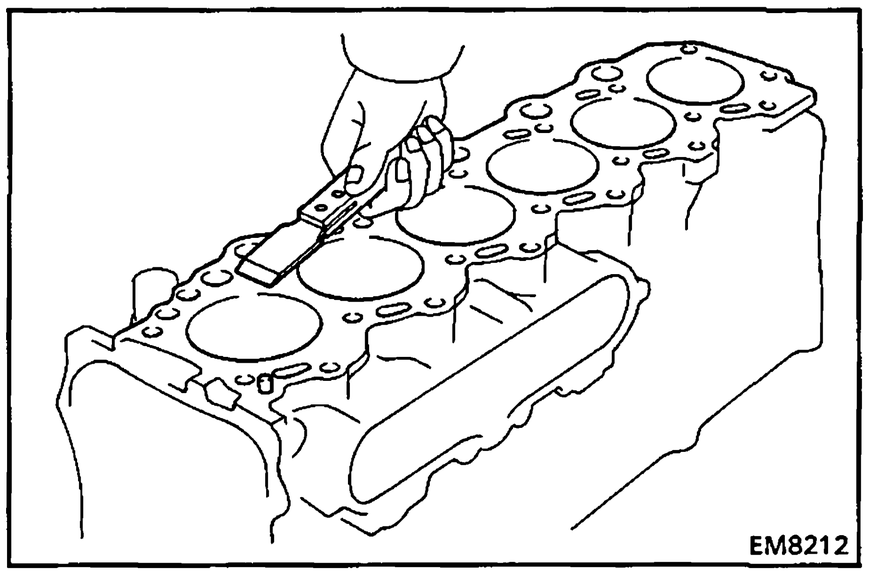

INSPECTION OF CYLINDER BLOCK

1. REMOVE GASKET MATERIAL

Using a gasket scraper, remove all the gasket material from the cylinder block surface.

2. CLEAN CYLINDER BLOCK

Using a soft brush and solvent, clean the cylinder block.

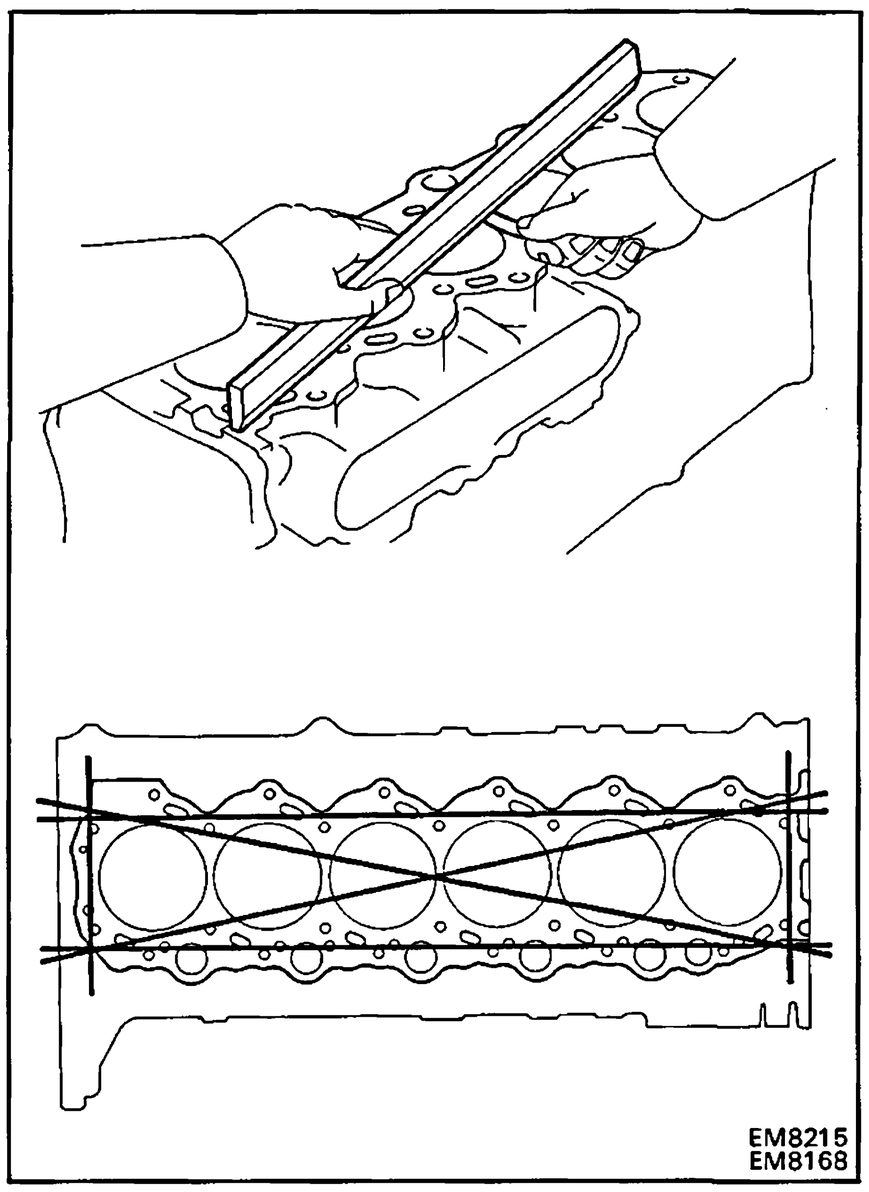

3. INSPECT TOP OF CYLINDER BLOCK FOR FLATNESS

Using a precision straight edge and thickness gauge, measure the surfaces contacting the cylinder head gasket for warpage.

Maximum warpage: 0.20 mm (0.0079 in.)

If warpage is greater than maximum, replace the cylinder block.

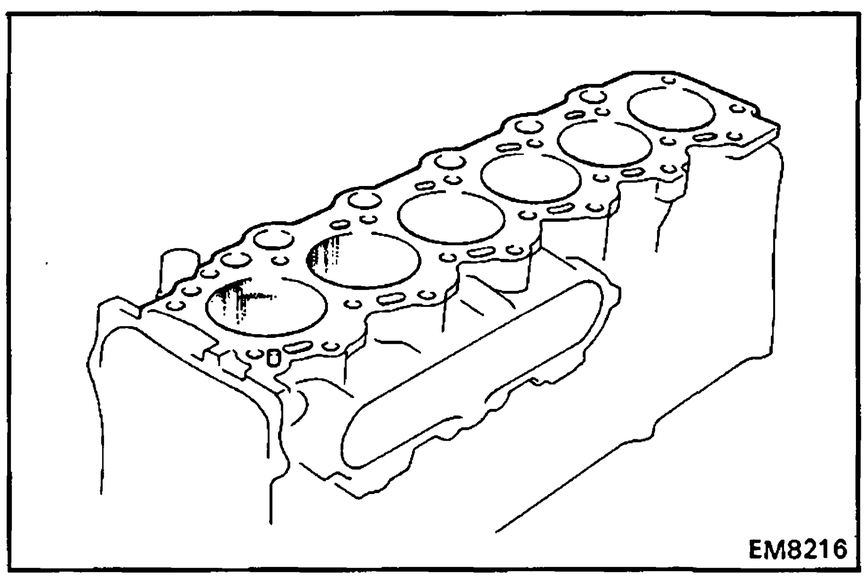

4. INSPECT CYLINDER FOR VERTICAL SCRATCHES

Visually check the cylinder for vertical scratches.

If deep scratches are present, rebore all five (1PZ) or six (1HZ and 1HD-T) cylinders. If necessary, replace the cylinder block.

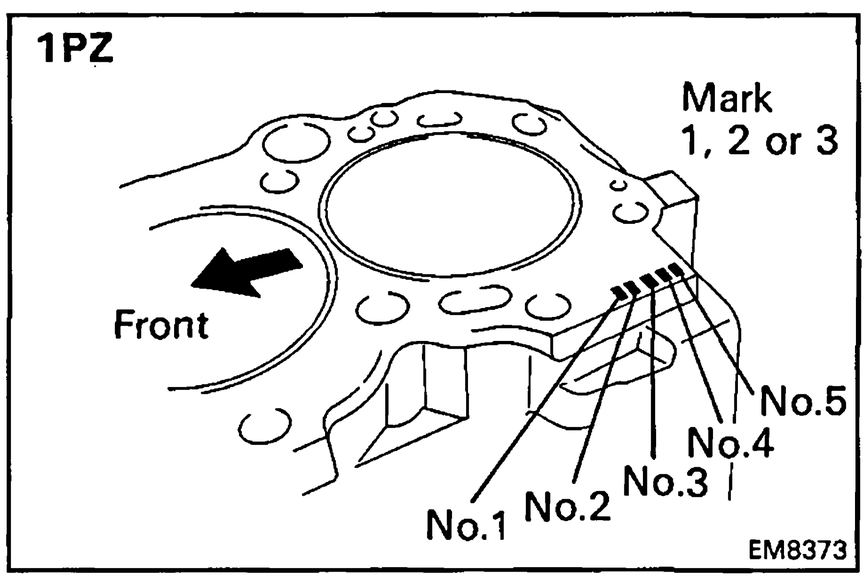

5. INSPECT CYLINDER BORE DIAMETER

HINT: There are three sizes of the standard cylinder bore diameter, marked "1", "2" and "3" accordingly. The mark is stamped on the upper left rear of the cylinder block.

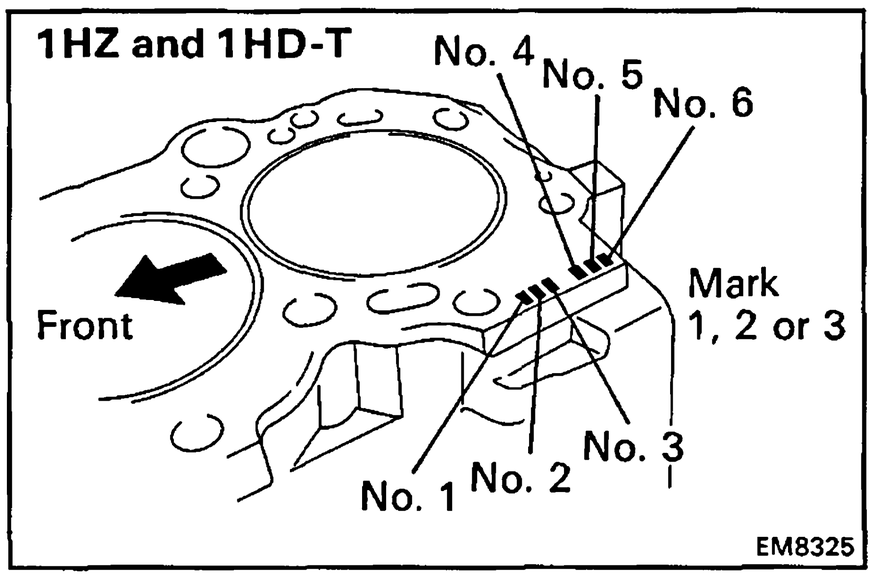

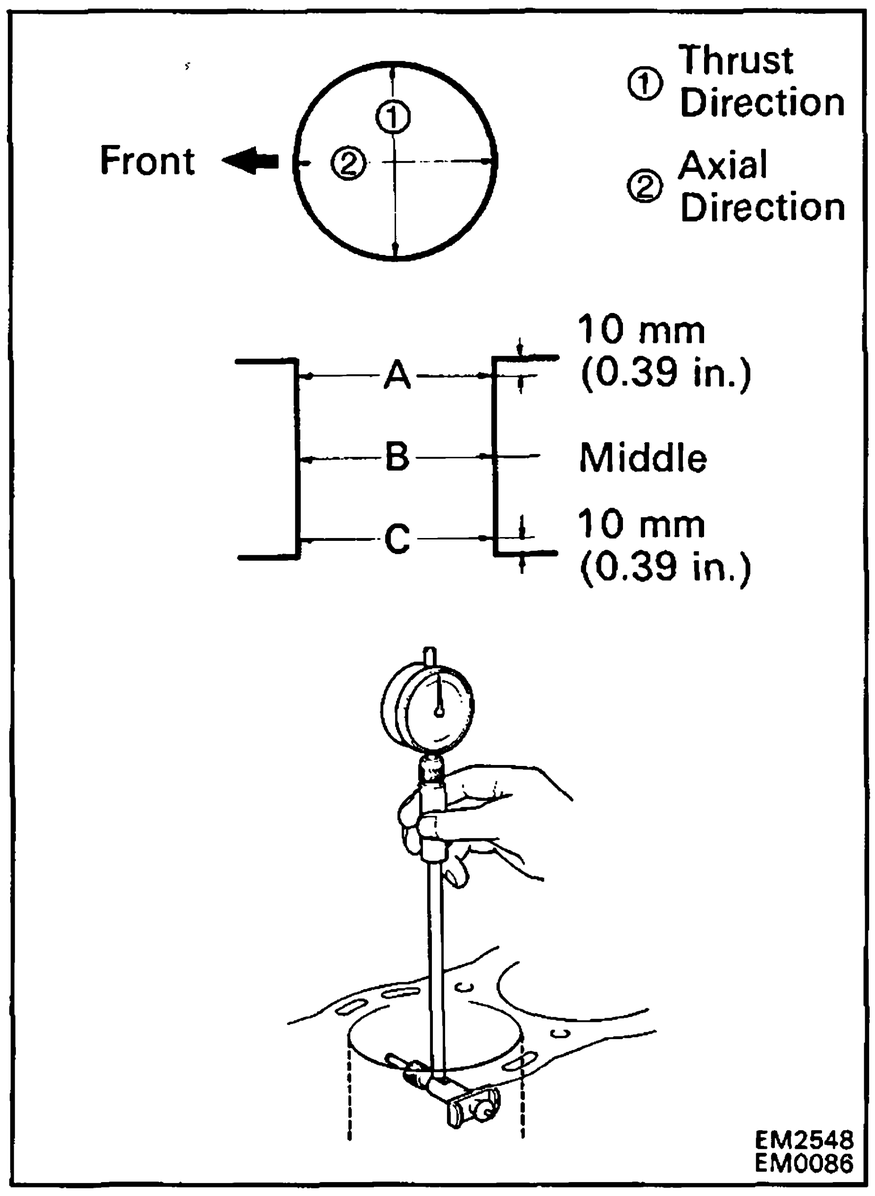

Using a cylinder gauge, measure the cylinder bore diameter at positions A, B and C in the thrust axial directions.

Standard diameter:

STD Mark "1"	**94.000 – 94.010 mm (3.7008 – 3.7012 in.)**
Mark "2"	**94.010 – 94.020 mm (3.7012 – 3.7016 in.)**
Mark "3"	**94.020 – 94.030 mm (3.7016 – 3.7020 in.)**

Maximum diameter:

STD	**94.23 mm (3.7098 in.)**
O/S 0.50	**94.73 mm (3.7295 in.)**

If the diameter is greater than maximum, rebore all five (1PZ) or six (1HZ and 1HD-T) cylinders.
If necessary, replace the cylinder block.

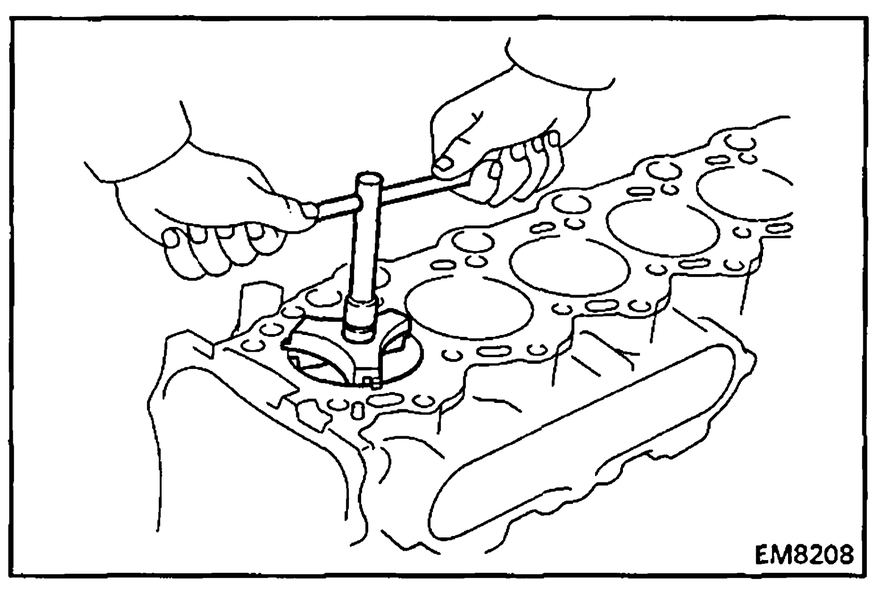

6. REMOVE CYLINDER RIDGE

If the wear is less than 0.2 mm (0.008 in.), use a ridge reamer to machine the piston ring ridge at the top of the cylinder.

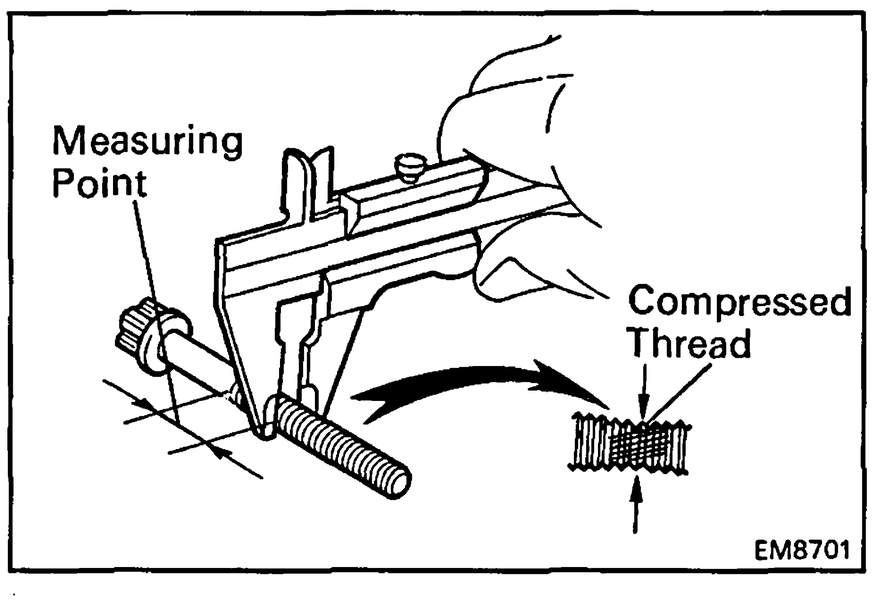

7. INSPECT MAIN BEARING CAP BOLTS

Using vernier calipers, measure the minimum diameter of the compressed thread at the measuring point.

Standard diameter: 11.800 – 12.000 mm (0.4646 – 0.4724 in.)

Minimum diameter: 11.50 mm (0.4528 in.)

If the diameter is less than minimum, replace the bolt.

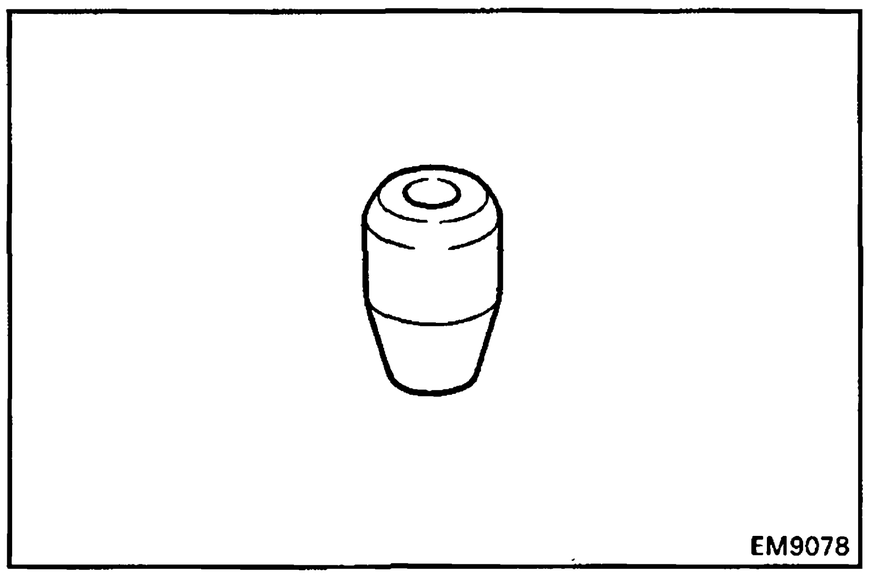

8. INSPECT CYLINDER BLOCK ORIFICE

Check that the oifice is not clogged.

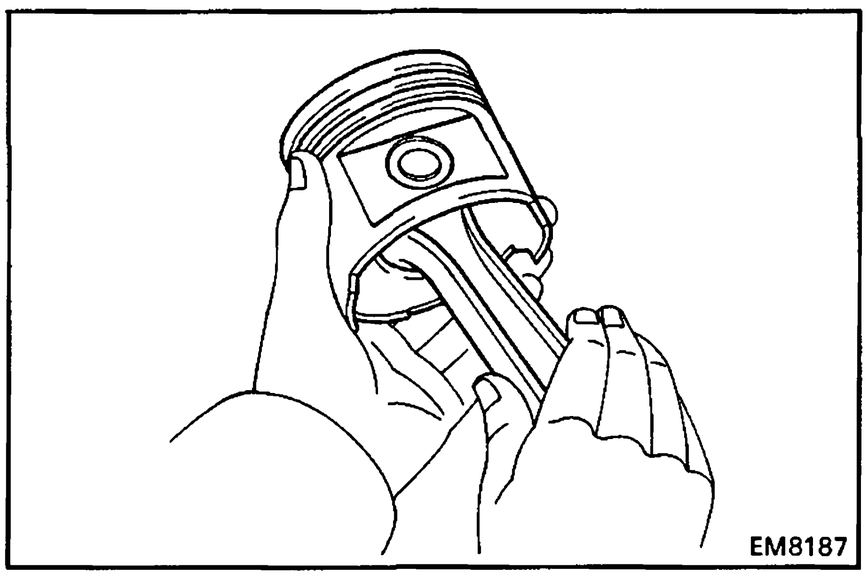

DISASSEMBLY OF PISTON AND CONNECTING ROD ASSEMBLIES

1. CHECK FIT BETWEEN PISTON AND PISTON PIN

Try to move the piston back and forth on the piston pin.

If any movement is felt, replace the piston and pin as a set.

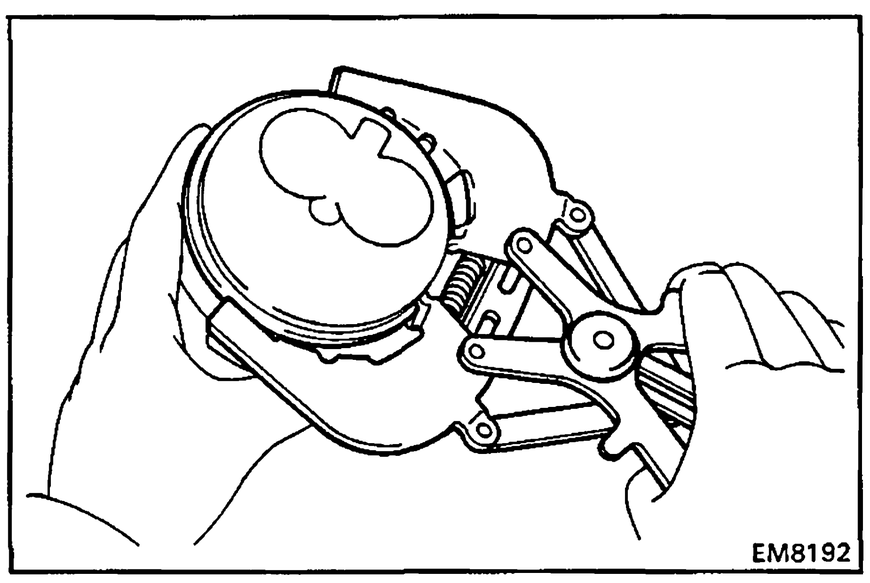

2. REMOVE PISTON RINGS

(a) Using a piston ring expander, remove the two compression rings and oil ring.

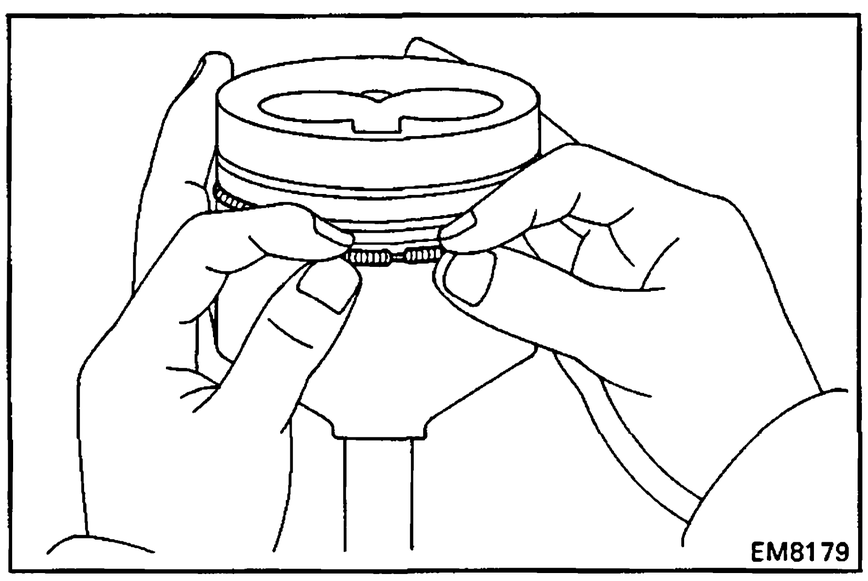

(b) Remove the coil by hand.

HINT: Arrange the rings in correct order only.

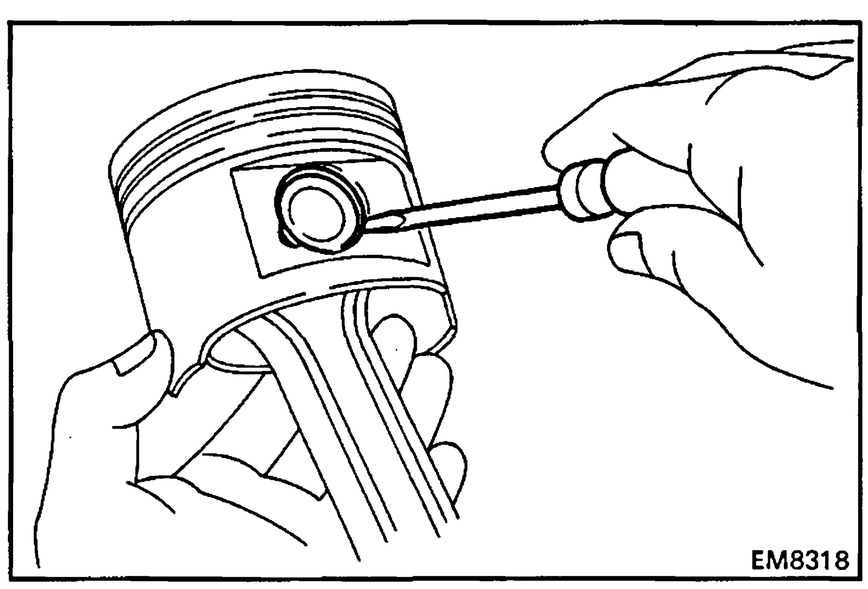

3. DISCONNECT CONNECTING ROD FROM PISTON

(a) Using a small screwdriver, remove the snap rings.

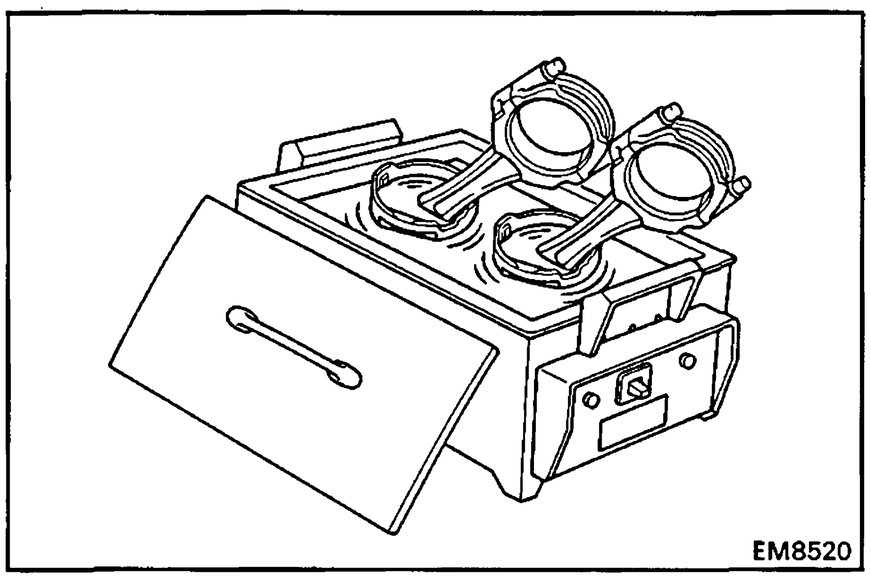

(b) Gradually heat the piston to approx. 80°C (176°F).

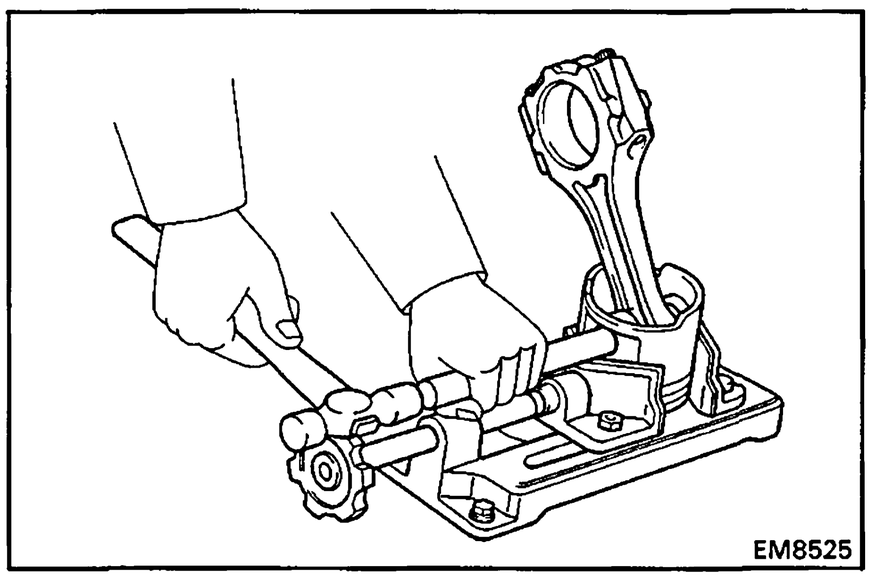

(c) Using a plastic-faced hammer and brass bar, lightly tap out the piston pin and remove the connecting rod.

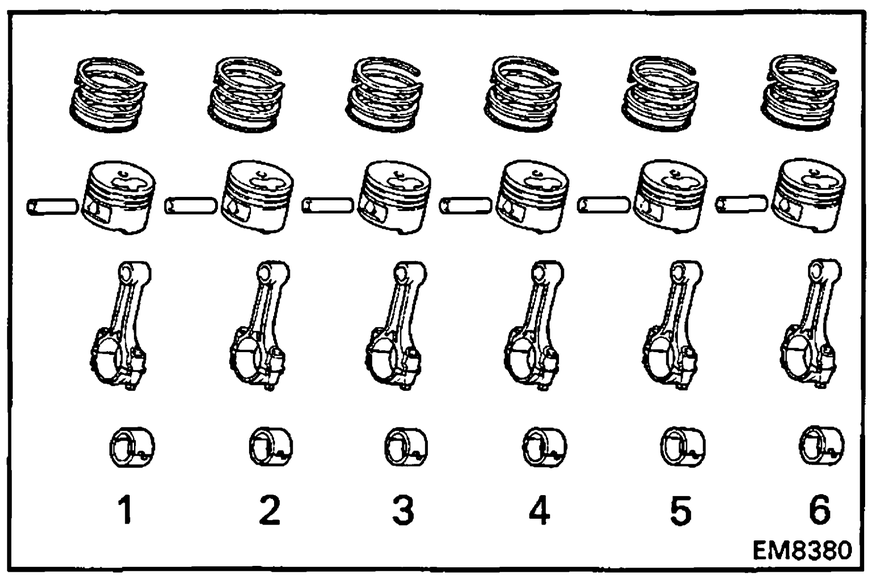

HINT:
- The piston and pin are a matched set.
- Arrange the pistons, pins, rings, connecting rods and bearings in correct order.

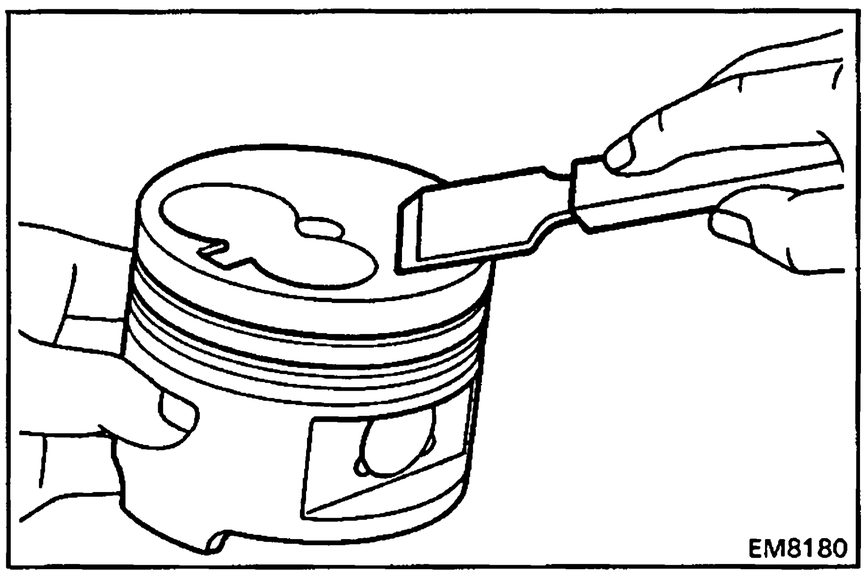

INSPECTION AND REPAIR OF PISTON AND CONNECTING ROD ASSEMBLIES

1. CLEAN PISTON

(a) Using a gasket scraper, remove the carbon from the piston top.

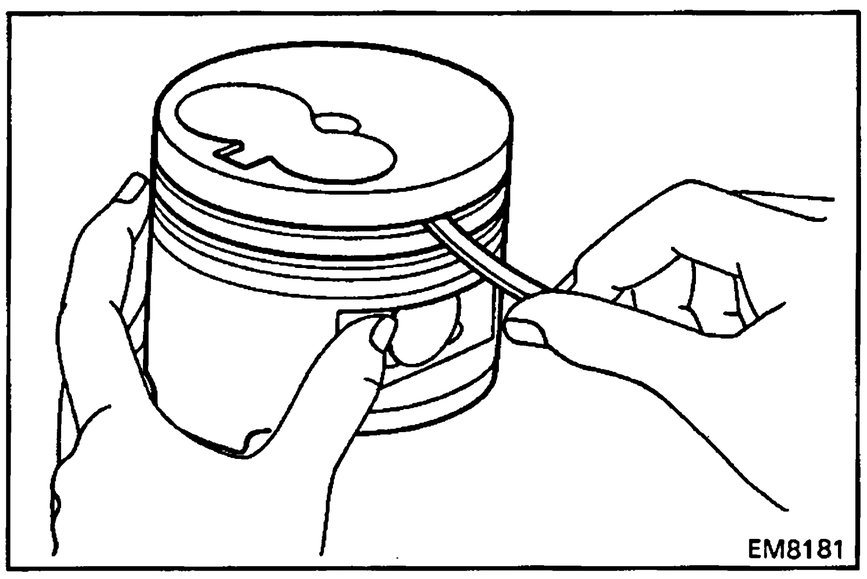

(b) Using a groove cleaning or broken ring, clean the piston ring grooves.

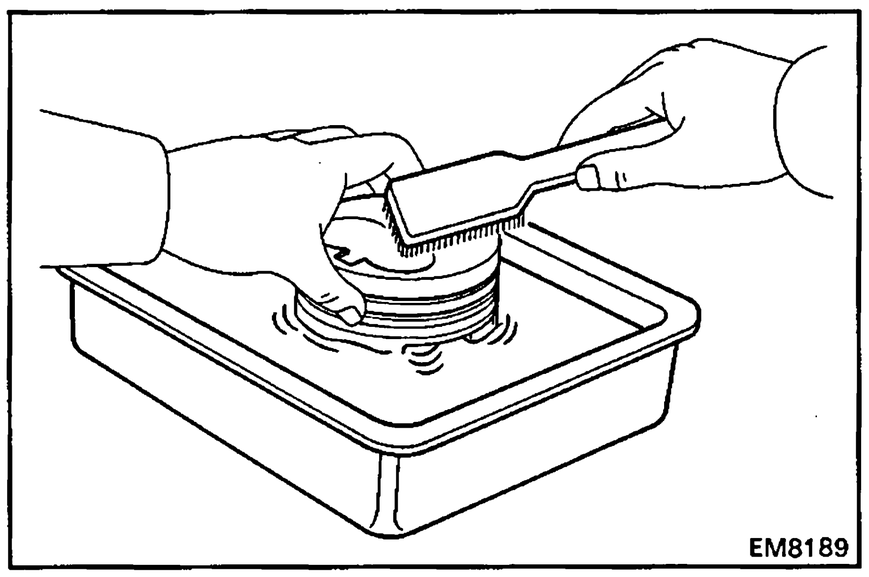

(c) Using solvent and a brush, thoroughly clean the piston.

NOTICE: Do not use a wire brush.

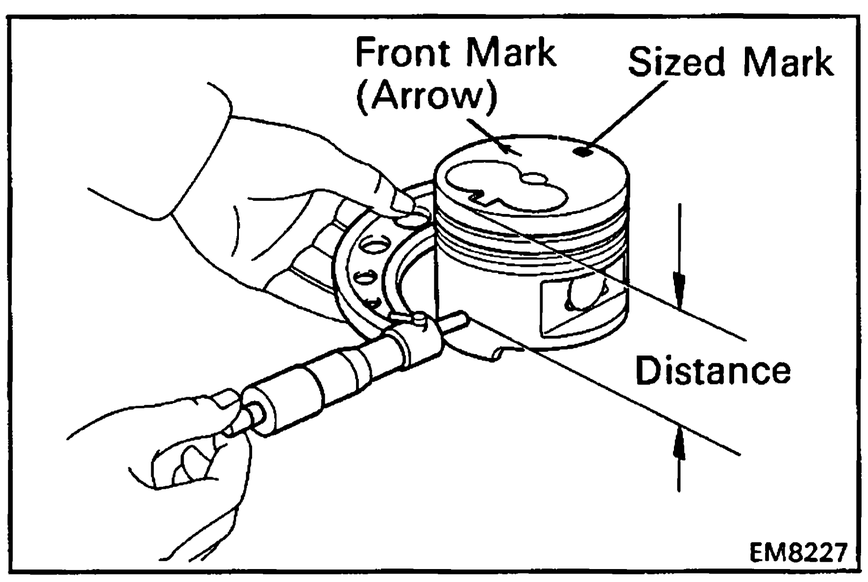

2. INSPECT PISTON DIAMETER AND OIL CLEARANCE

HINT: There are three sizes of the standard piston diameter, marked "1", "2" and "3" accordingly. The mark is stamped on the top of the piston.

(a) Using a micrometer, measure the piston diameter at right angles to the piston pin center line, at the indicated distance from the piston head.

Distance:

1PZ and 1HZ	**58.6 mm (2.3071 in.)**
1HD-T	**65.7 mm (2.5866 in.)**

Piston diameter:

STD Mark "1"	**93.95 – 93.96 mm (3.6988 – 3.6992 in.)**
Mark "2"	**93.96 – 93.97 mm (3.6992 – 3.7000 in.)**
Mark "3"	**93.97 – 93.98 mm (3.7000 – 3.7000 in.)**
O/S 0.50	**94.45 – 94.48 mm (3.7185 – 3.7197 in.)**

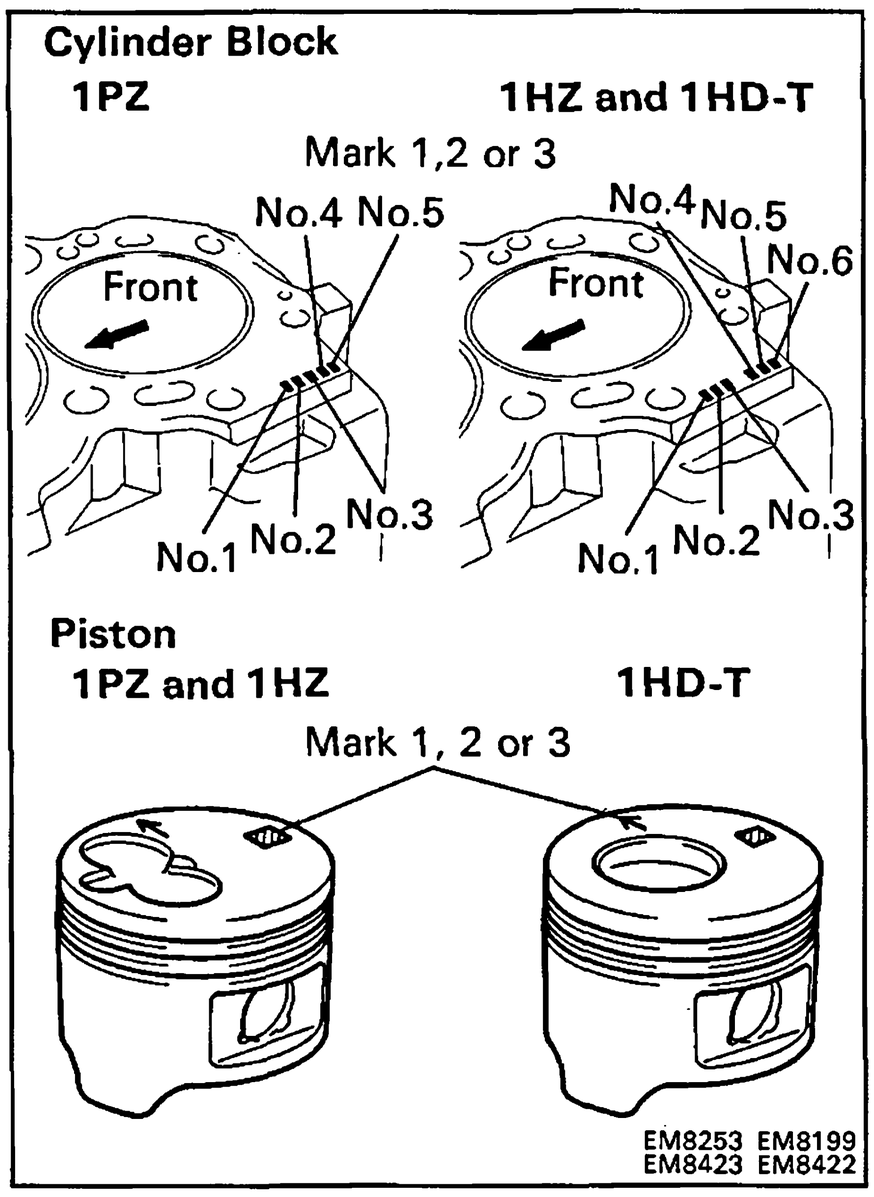

(b) Measure the cylinder bore diameter in the thrust directions. (See step 5 on page EM-93)

(c) Subtract the piston diameter measurement from the cylinder bore diameter measurement.

Standard oil clearance: 0.04 – 0.06 mm (0.0016 – 0.0024 in.)

Maximum oil clearance: 0.14 mm (0.0055 in.)

If the oil clearance is greater than maximum, replace all five (1PZ) or six (1HZ and 1HD-T) pistons and rebore all five (1PZ) or six (1HZ and 1HD-T) cylinders. If necessary, replace the cylinder block.

HINT (Use cylinder block subassembly): When installing a standard piston, install one with the same number mark as the standard bore diameter mark on the cylinder block.

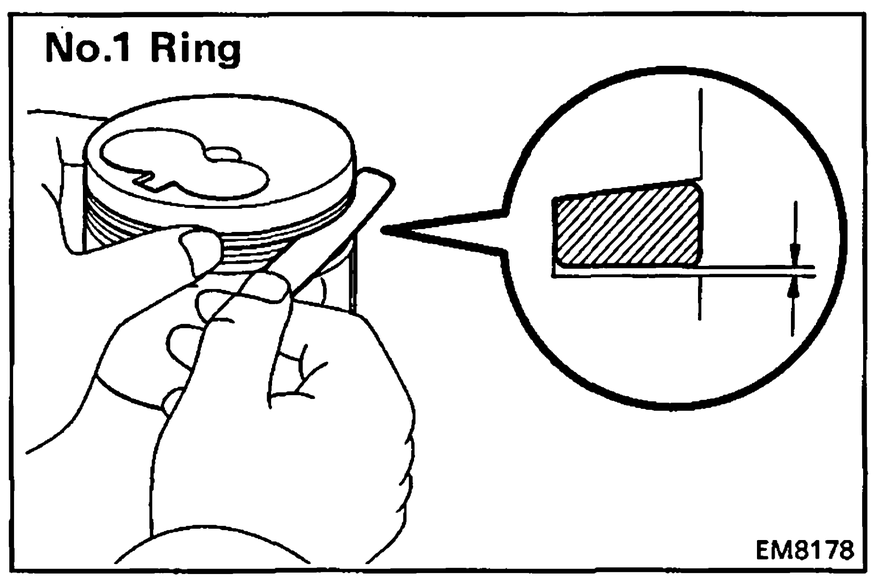

3. INSPECT CLEARANCE BETWEEN WALL OF RING GROOVE AND NEW PISTON RING

(No.1 Ring)

Install new No.1 piston ring to the piston. Using a thickness gauge, measure the clearance between the piston ring and wall of the piston ring groove.

Ring groove clearance:
No.1 0.050 – 0.095 mm (0.0020 – 0.0037 in.)

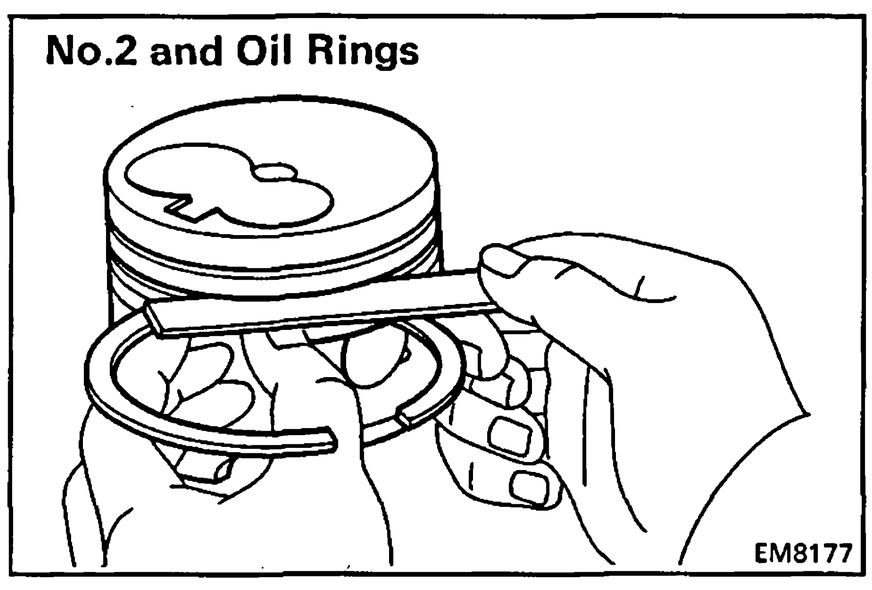

(No.2 and Oil Rings)

Using a thickness gauge, measure the clearance between new piston ring and the wall of the piston ring groove.

Ring groove clearance:
No.2 0.06 – 0.10 mm (0.0024 – 0.0039 in.)
Oil 0.03 – 0.07 mm (0.0012 – 0.0028 in.)

If the clearance is not as specified, replace the piston.

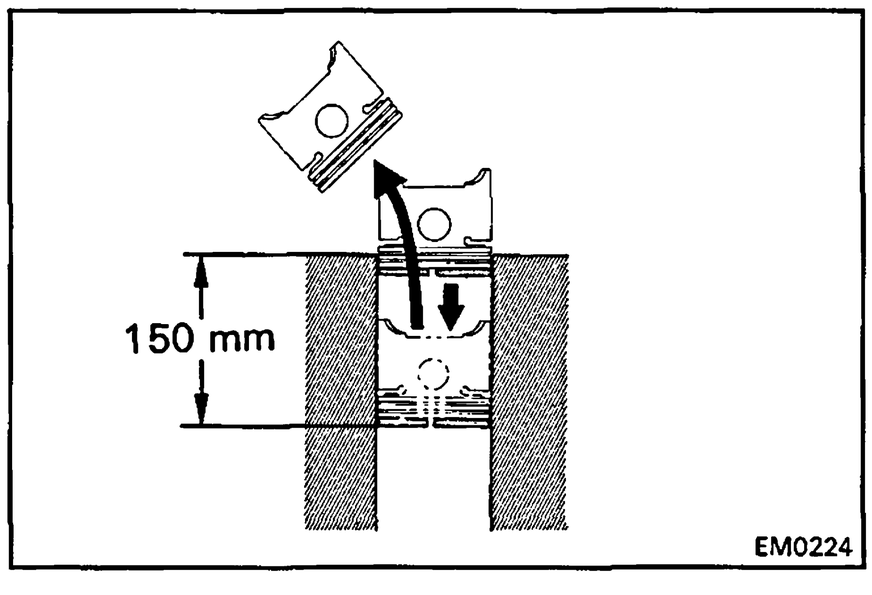

4. INSPECT PISTON RING END CAP

(a) Insert the piston ring into the cylinderbore.

(b) Using a piston, push the piston ring a little beyond the bottom of the ring travel, 150 mm (5.91 in.) from the top of the cylinder block.

(c) Using a thickness gauge, measure the end gap.

Standard end gap:

No.1	**0.27 – 0.54 mm (0.0106 – 0.0213 in.)**
No.2	**0.40 – 0.62 mm (0.0157 – 0.0244 in.)**
Oil	**0.20 – 0.52 mm (0.0079 – 0.0205 in.)**

Maximum end gap:

No.1	**1.34 mm (0.0591 in.)**
No.2	**1.42 mm (0.0551 in.)**
Oil	**1.32 mm (0.0520 in.)**

If the end gap is greater than maximum, replace the piston ring. If the end gap is greater than maximum, even with a new piston ring, rebore all five (1PZ) or six (1HZ and 1HD-T) cylinders or replace the cylinder block.

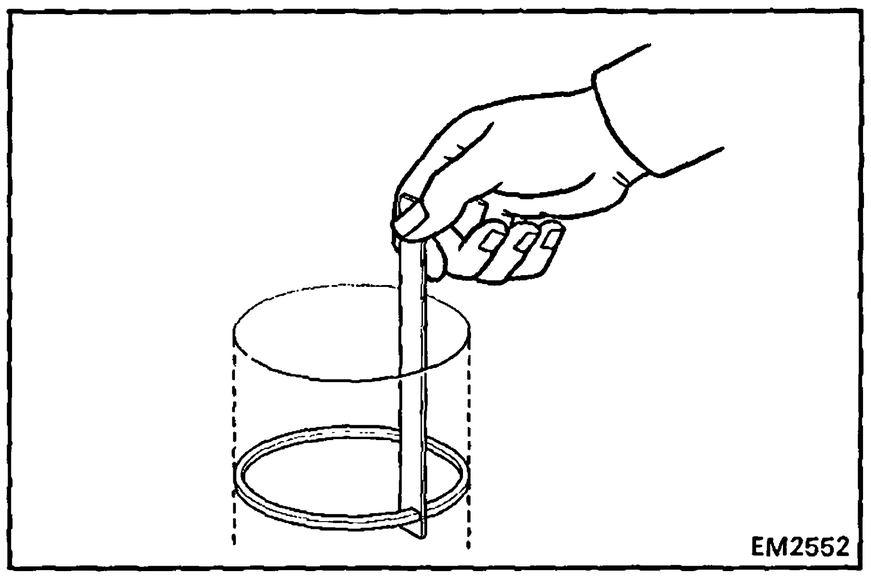
EM2552

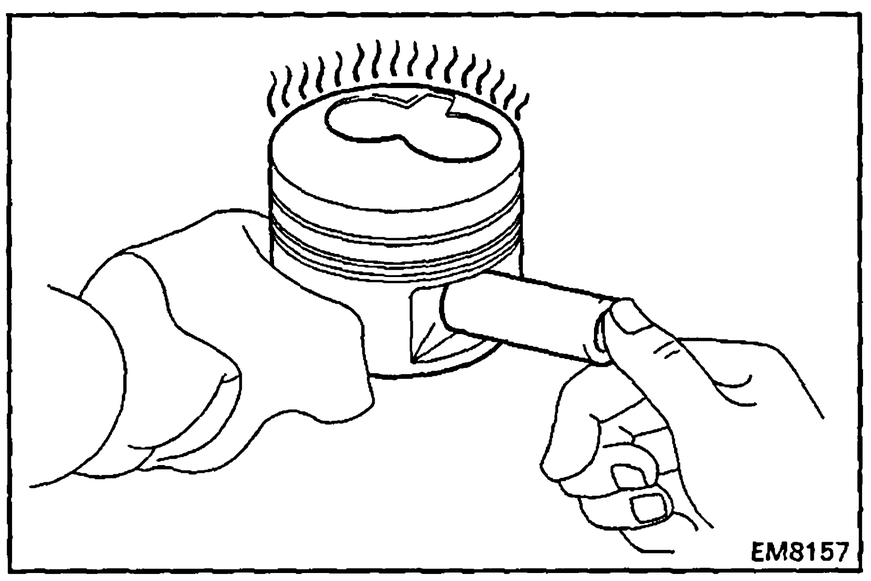
EM8157

5. INSPECT PISTON PIN FIT

At 80°C (176°F), you should be able to push the piston pin into the piston pin hole with your thumb.

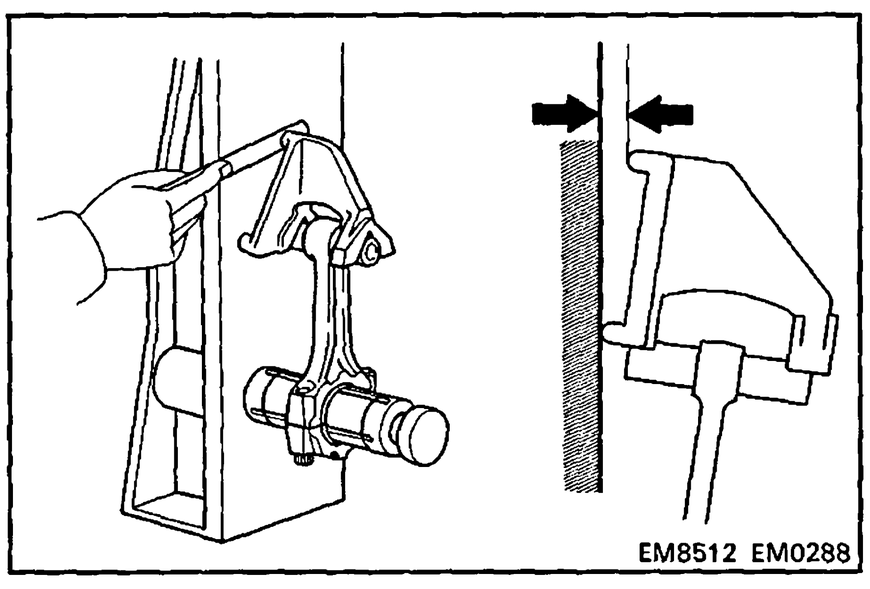
EM8512 EM0288

6. INSPECT CONNECTING ROD

A. Inspect connecting rod alignment

Using a rod aligner, check the connecting rod alignment.

- Check for bending.

Maximum bending:

0.03 mm (0.0012 in.) per 100 mm (3.94 in.)

If bent is greater than maximum, replace the connecting rod assembly.

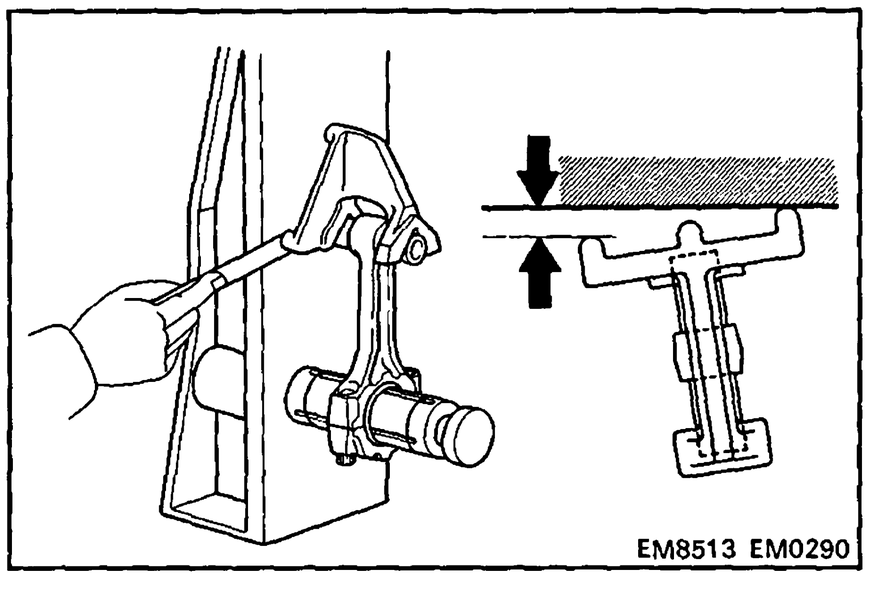
EM8513 EM0290

- Check for twist.

Maximum twist:

0.15 mm (0.0059 in.) per 100 mm (3.94 in.)

If twist is greater than maximum, replace the connecting rod assembly.

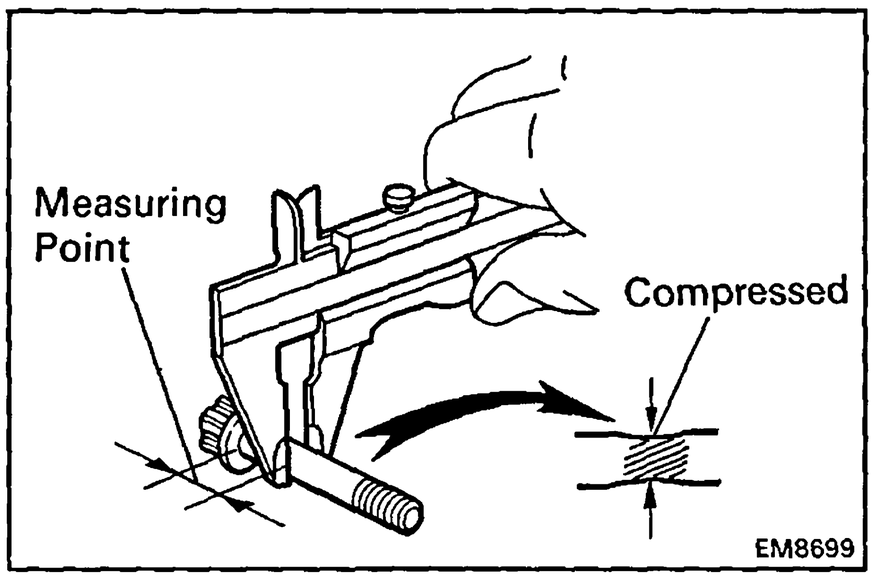

B. Inspect connecting rod bolts

Using vernier calipers, measure the minimum diameter of the compressed bolt at the measuring point.

Standard diameter: 8.300 – 8.400 mm (0.3268 – 0.3307 in.)

Minimum diameter: 7.95 mm (0.3130 in.)

If the diameter is less than minimum, replace the connecting rod bolt.

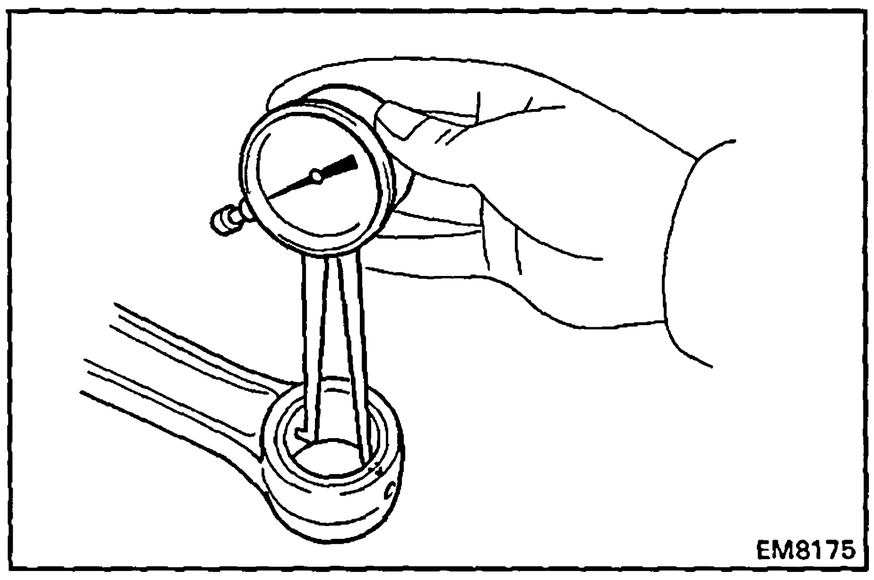

C. Inspect piston pin oil clearance

(a) Using a caliper gauge, measure the inside diameter of the connecting rod bushing.

Bushing inside diameter:
1PZ and 1HZ
29.008 – 29.020 mm (1.1420 – 1.1425 in.)
1HD-T
33.008 – 33.020 mm (1.2995 – 1.3000 in.)

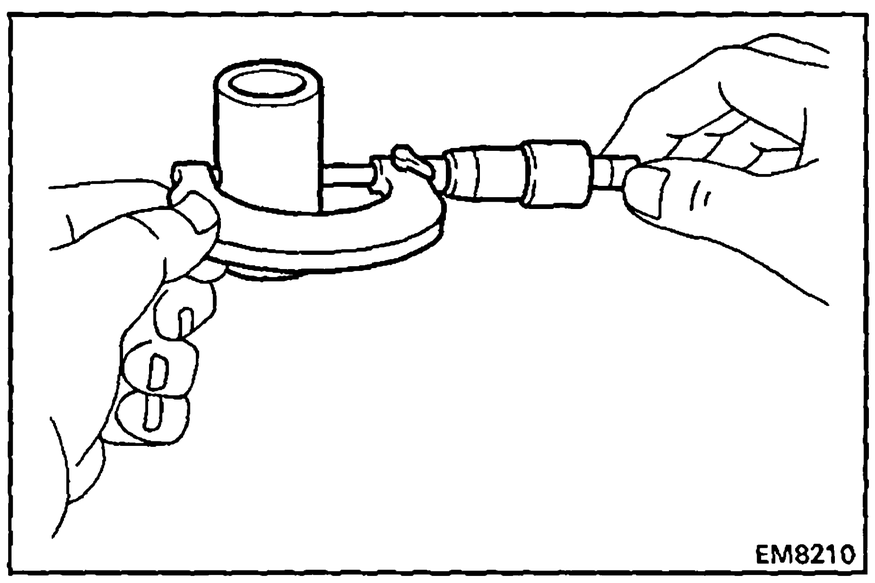

(b) Using a micrometer, measure the piston pin diameter.

Piston pin diameter:
1PZ and 1HZ
29.000 – 29.012 mm (1.1417 – 1.1422 in.)
1HD-T
33.000 – 33.012 mm (1.2992 – 1.2997 in.)

(c) Subtract the piston pin diameter measurement from the bushing inside diameter measurement.

Standard oil clearance: 0.004 – 0.012 mm (0.0002 – 0.0005 in.)

Maximum oil clearance: 0.03 mm (0.0012 in.)

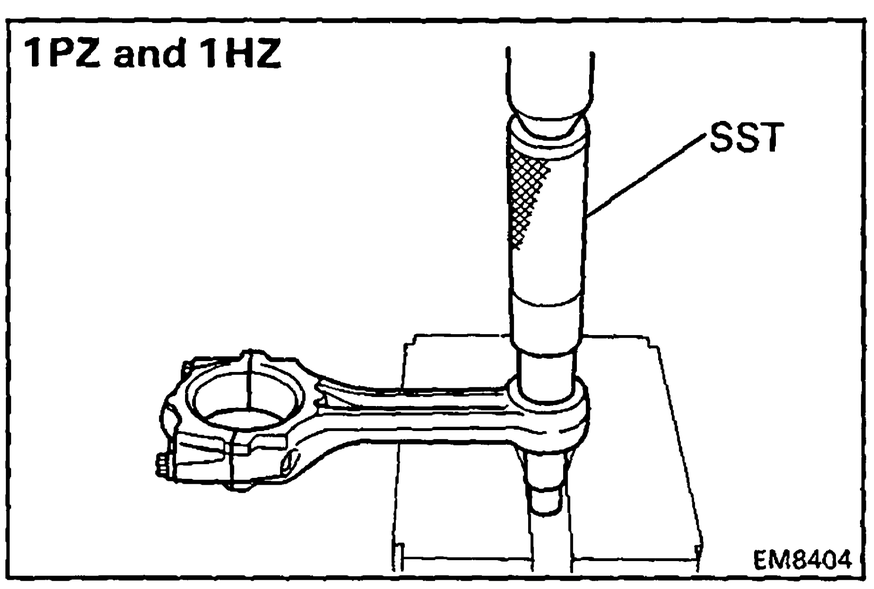

7. IF NECESSARY, REPLACE CONNECTING ROD BUSHINGS

A. Remove connecting rod bushings

Using SST and a press, press out the bushing.

SST 1PZ and 1HZ	09222-66010
1HD-T	09222-17010 (09222-05020, 09222-05040)

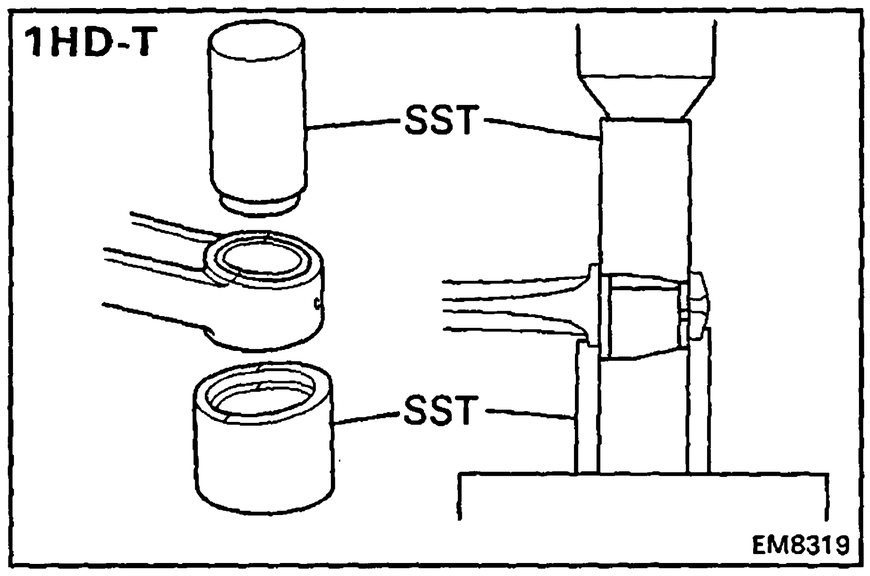

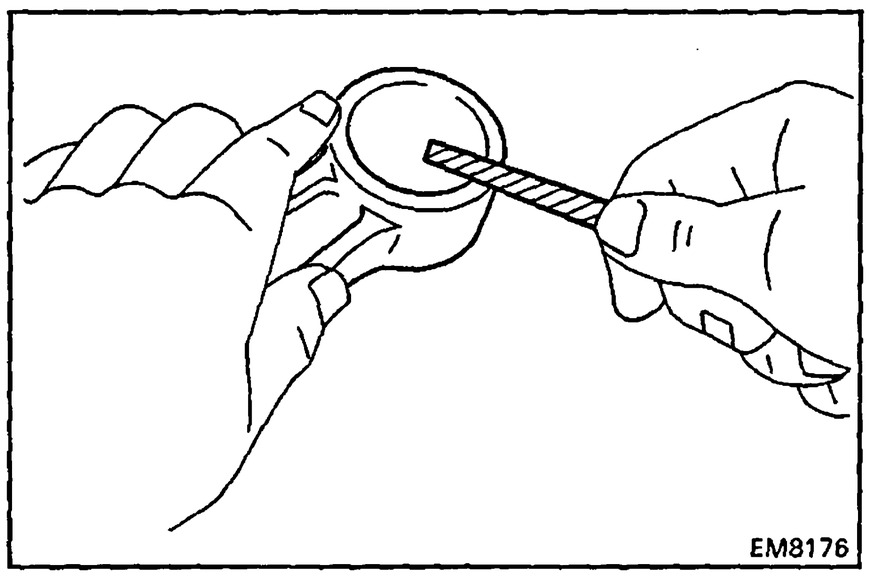

B. Install new connecting rod bushings

(a) Using a round file, lightly file off any roughness from the small end of the connecting rod.

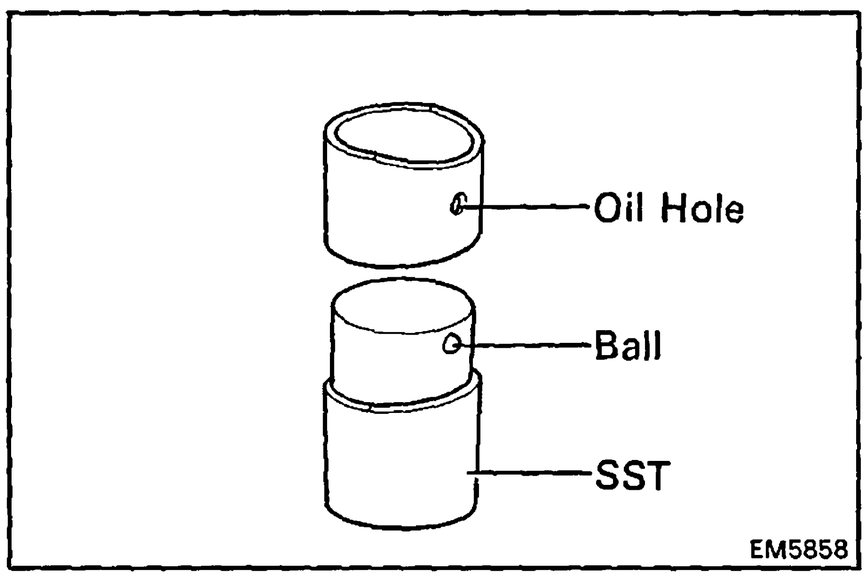

(b) (1HD-T)
Attach the bushing to SST with the ball of SST inside the oil hole of the bushing.

SST 09222-17010 (09222-05030)

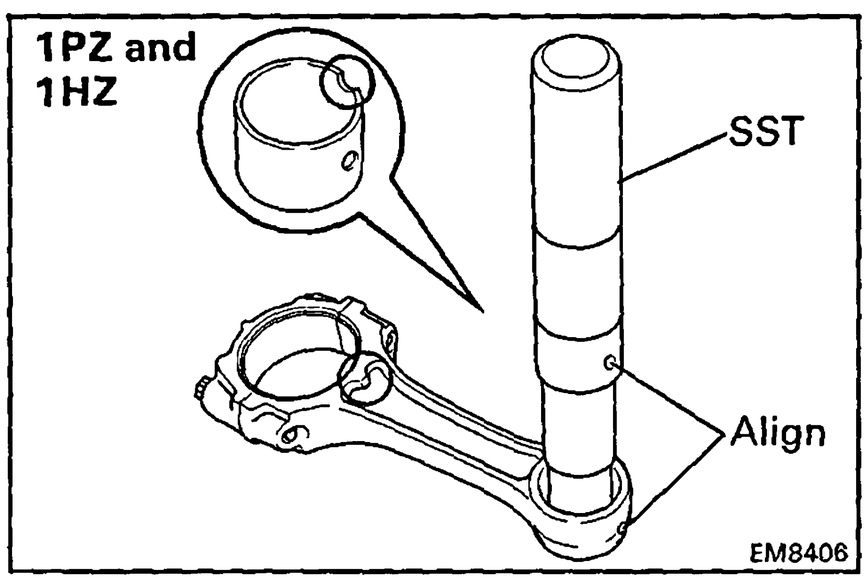

(c) Align the oil holes of the bushing and connecting rod.

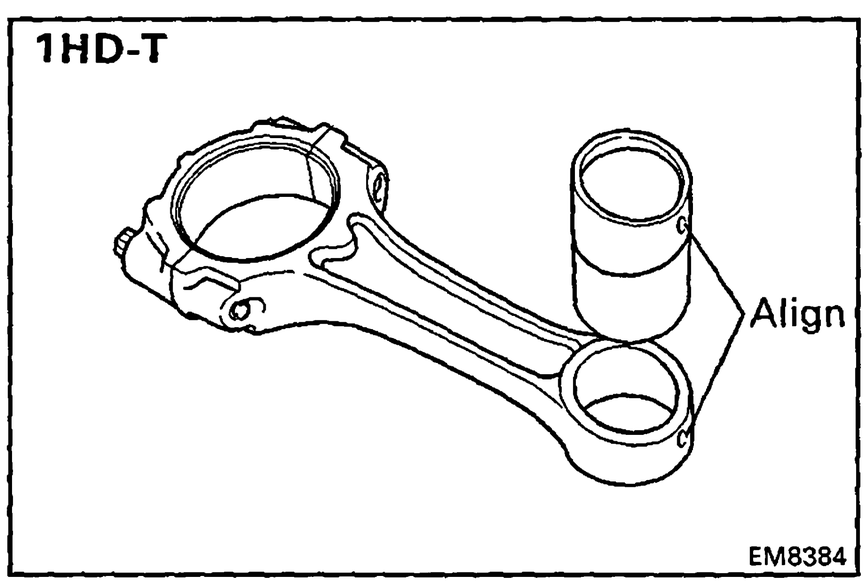

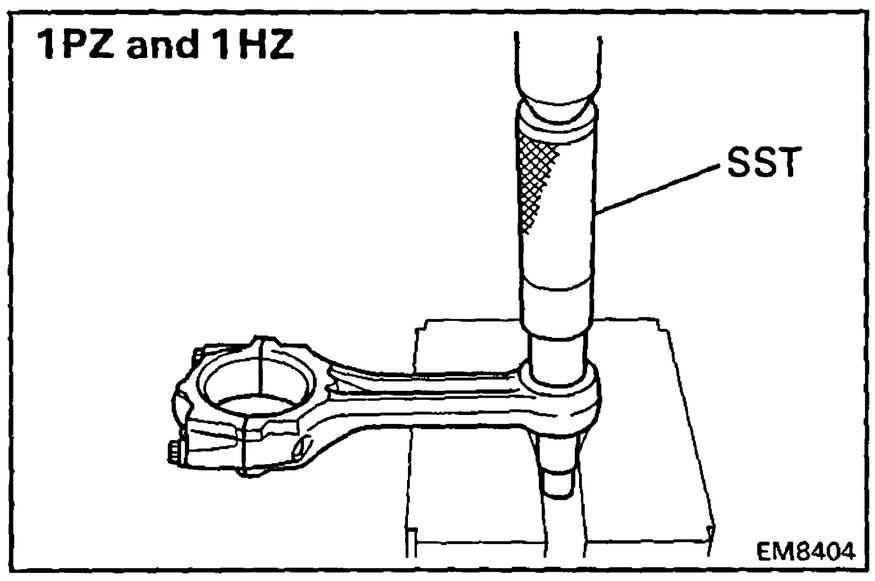

(d) Using SST and a press, press in the bushing.

SST	1PZ and 1HZ	09222-66010
	1HD-T	09222-17010 (09222-05020, 09222-05030, 09222-05040)

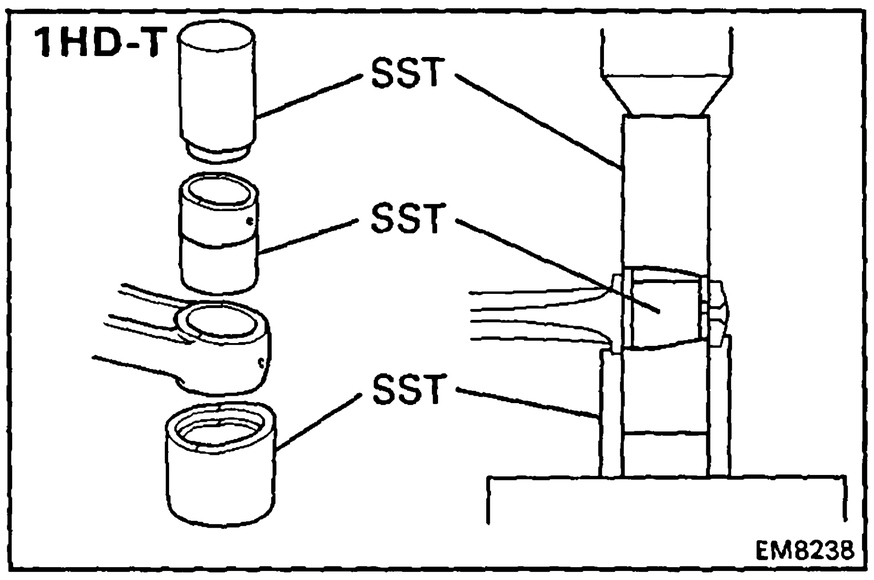

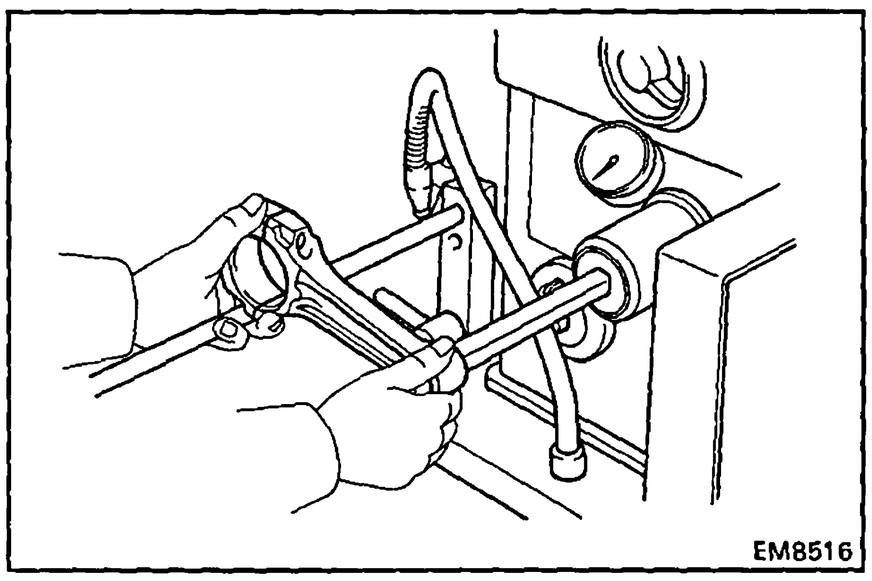

C. Hone connecting rod bushing and check piston pin fit

(a) Using a pin hole grinder, hone the bushing to obtain the standard specified clearance (see page EM-100) between the bushing and piston pin.

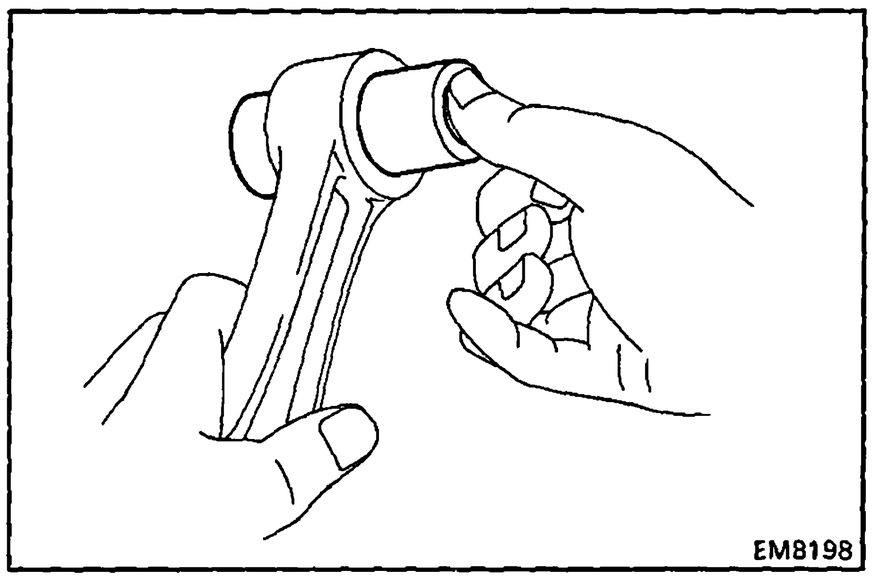

(b) Check the piston pin fit at normal room temperature. Coat the piston pin with engine oil, and push it into the connecting rod with your thumb.

BORING OF CYLINDERS

HINT:

- Bore all five (1PZ) or six (1HZ and 1HD-T) cylinders for the oversized piston outside diameter.
- Replace the piston rings with ones to match the oversized pistons.

1. KEEP OVERSIZED PISTONS

Oversized piston diameter:
O/S 0.50 94.45 – 94.48 mm (3.7185 – 3.7197 in.)

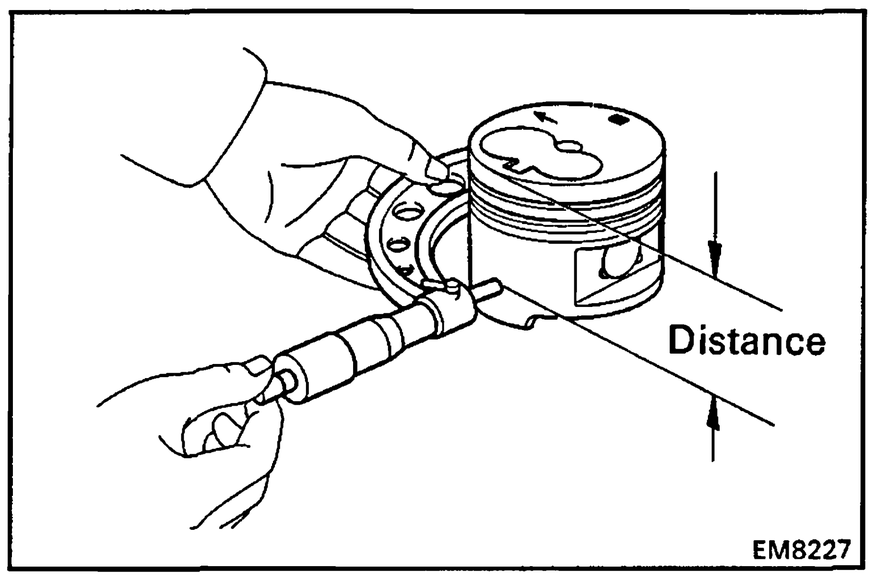

2. CALCULATE AMOUNT TO BORE CYLINDER

(a) Using a micrometer, measure the piston diameter at right angles to the piston pin center line, at the indicated distance from the piston head.

Distance:

1PZ and 1HZ	**58.6 mm (2.3071 in.)**
1HD-T	**65.7 mm (2.5866 in.)**

(b) Calculate the amount each cylinder is to be rebored as follows:

Size to be rebored = P + C – H
P = Piston diameter
C = Piston oil clearance
0.04 – 0.06 mm (0.0016 – 0.0024 in.)
H = Allowance for honing
0.02 mm (0.0008 in.) or less

3. BORE AND HONE CYLINDERS TO CALCULATED DIMENSIONS

Maximum honing: 0.02 mm (0.0008 in.)

NOTICE: Excess honing will destroy the finished roundness.

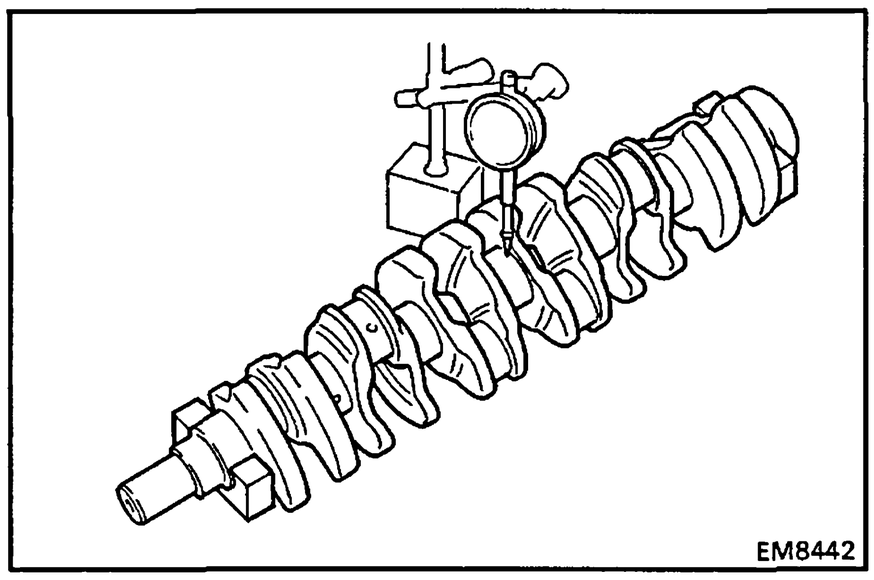

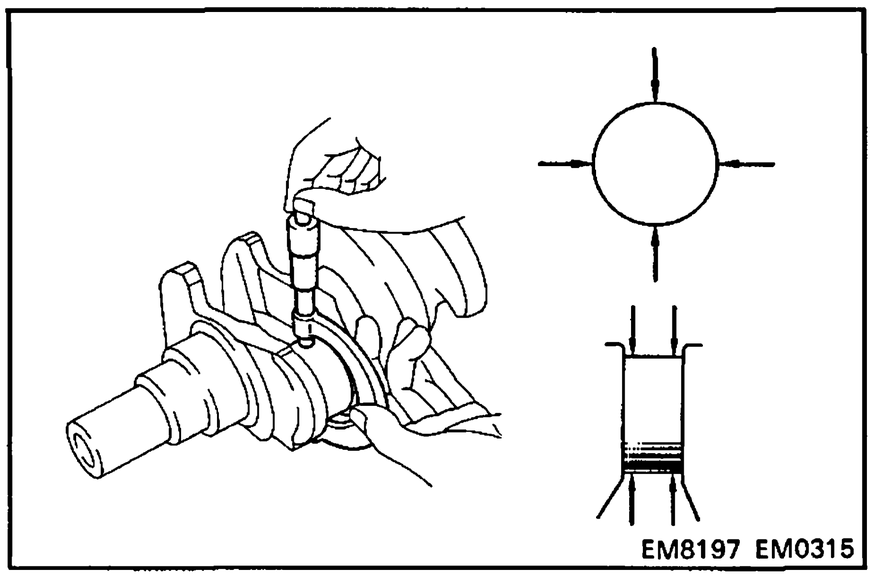

INSPECTION AND REPAIR OF CRANKSHAFT

1. INSPECT CRANKSHAFT FOR RUNOUT

(a) Place the crankshaft on V-blocks.

(b) Using a dial indicator, measure the circle runout at the center journal.

Maximum circle runout: 0.06 mm (0.0024 in.)

If the circle runout is greater than maximum, replace the crankshaft.

2. INSPECT MAIN JOURNALS AND CRANK PINS

(a) Using a micrometer, measure the diameter of each main journal and crank pin.

Main journal diameter:

STD	**66.982 – 67.000 mm (2.6371 – 2.6378 in.)**
U/S 0.25	**66.745 – 66.755 mm (2.6278 – 2.6281 in.)**
U/S 0.50	**66.495 – 66.505 mm (2.6179 – 2.6183 in.)**

Crank pin diameter:

STD	**58.982 – 59.000 mm (2.3221 – 2.3228 in.)**
U/S 0.25	**58.745 – 58.755 mm (2.3128 – 2.3132 in.)**
U/S 0.50	**58.495 – 58.505 mm (2.3029 – 2.3033 in.)**

If the diameter is not as specified, check the oil clearance (See pages EM-86 to 92).

(b) Check each main journal and crank pin for taper and out-of-round as shown.

Maximum taper and out-of-round: 0.02 mm (0.0008 in.)

If the taper or out-of-round is greater than maximum, grind or replace the crankshaft.

3. IF NECESSARY, GRIND AND HONE MAIN JOURNALS AND/OR CRANK PINS

Grind and hone the main journals and/or crank pins to the finished undersized diameter (See procedure step 2).

Install new main journal and/or crank pin undersized bearings.

REPLACEMENT OF CRANKSHAFT OIL SEAL

HINT: There are two methods (A and B) to replace the oil seal as follows:

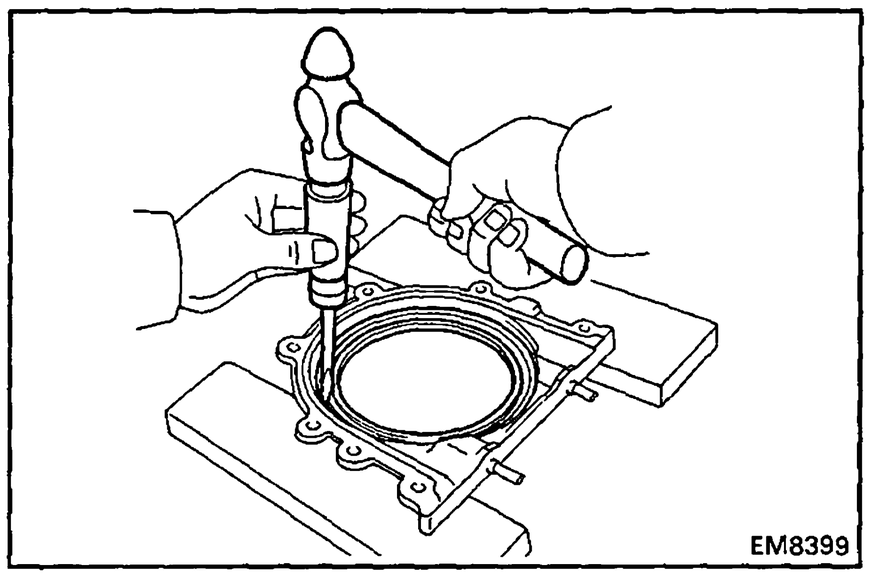
EM8399

REPLACE CRANKSHAFT REAR OIL SEAL

A. If rear oil seal retainer is removed from cylinder block:

(a) Using a screwdriver and hammer, tap out the oil seal.

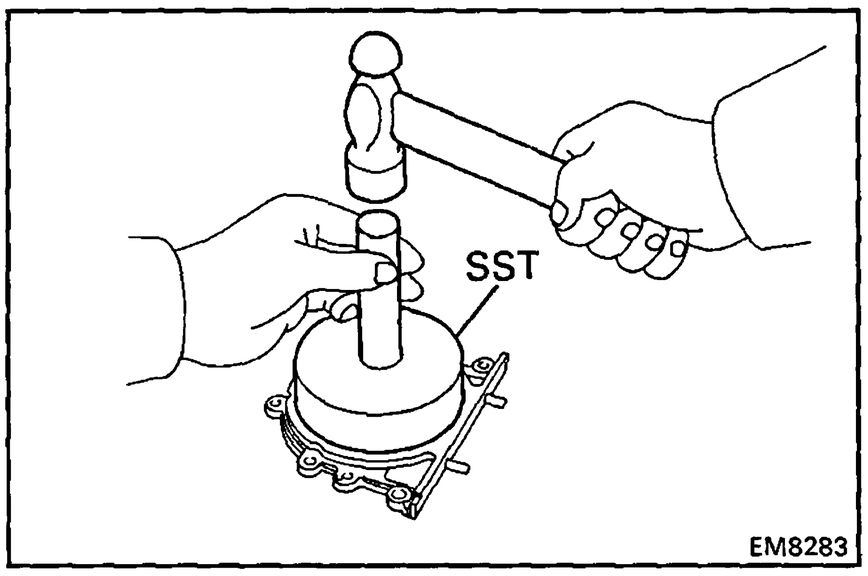

EM8283

(b) Using SST and a hammer, tap in a new oil seal until its surface is flush with the rear oil seal retainer edge.

SST 09223-56010

(c) Apply MP grease to the oil seal lip.

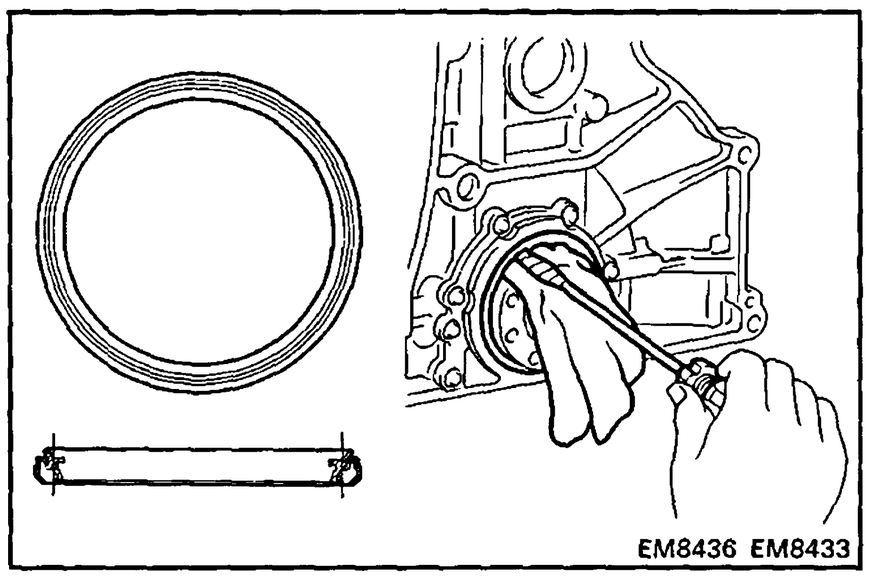
EM8436 EM8433

B. If rear oil seal retainer is installed to cylinder block:

(a) Using a knife, cut off the oil seal lip.

(b) Using a screwdriver, pry out the oil seal.

NOTICE: Be careful not to damage the crankshaft. Tape the screwdriver tip.

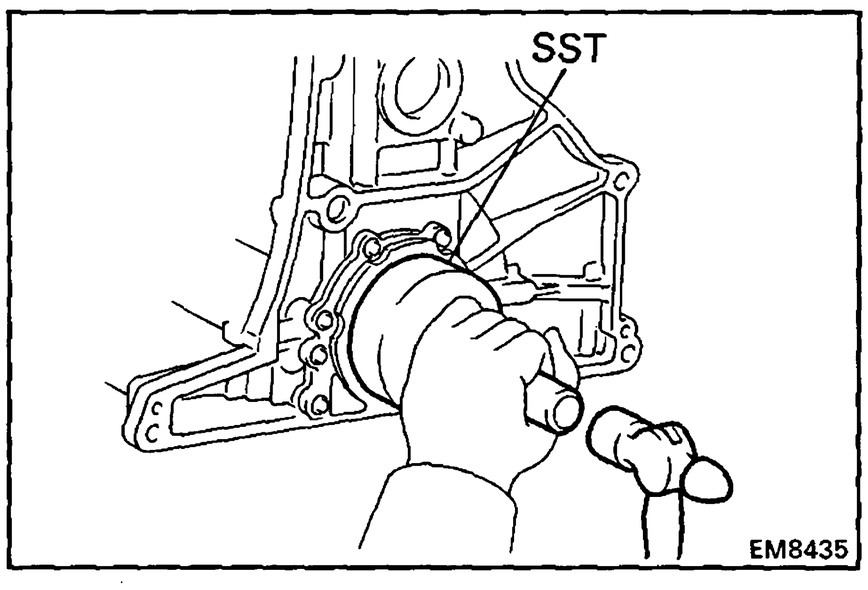

EM8435

(c) Apply MP grease to a new oil seal lip.

(d) Using SST and a hammer, tap in the oil seal until its surface is flush with the rear oil seal retainer edge.

SST 09223-56010

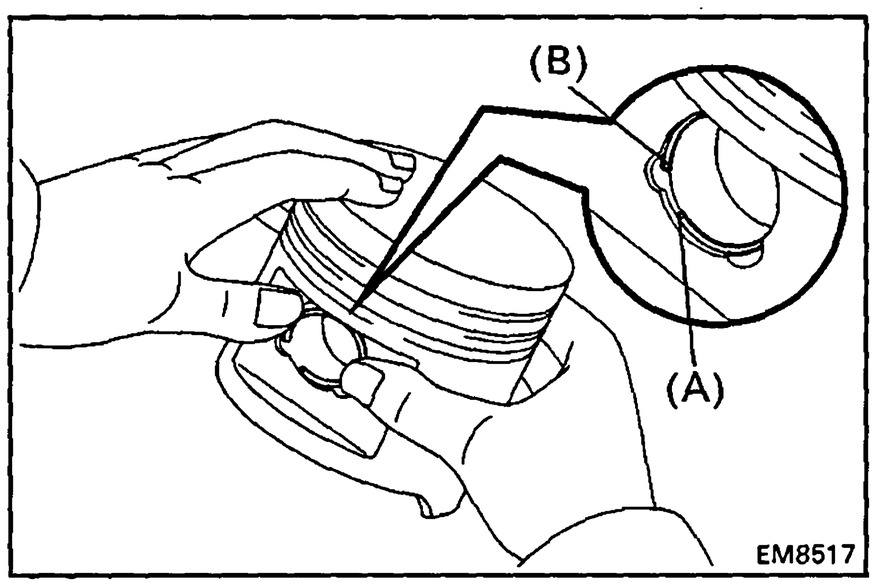

ASSEMBLY OF PISTON AND CONNECTING ROD ASSEMBLIES

1. ASSEMBLE PISTON AND CONNECTING ROD

(a) Install a new snap ring on one side of the piston pin hole.

- Position the snap ring so that end (B) of the snap ring is aligned with the hollow, then push the snap ring into the piston groove starting from end (A).

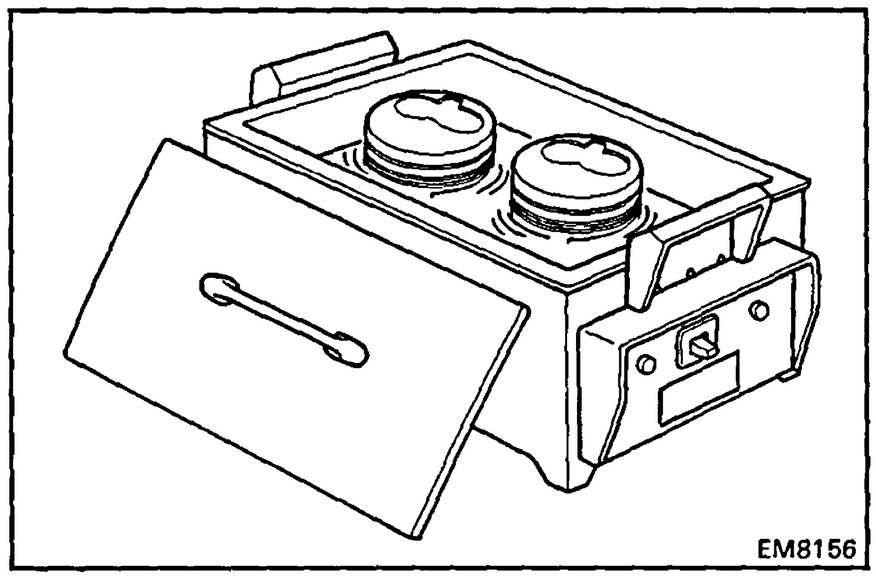

(b) Gradually heat the piston to about 80°C (176°F).

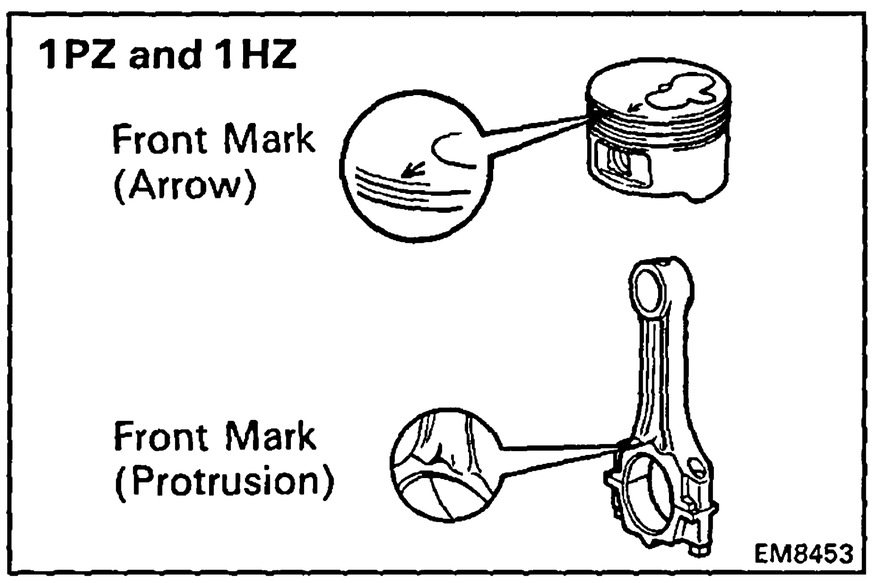

(c) Apply a light coat of engine oil to the piston pin.

(d) Align the front marks of the piston and connecting rod, and push in the piston pin with your thumb.

(e) Install a new snap ring on the other side of the piston pin hole using the same method as in (a) above.

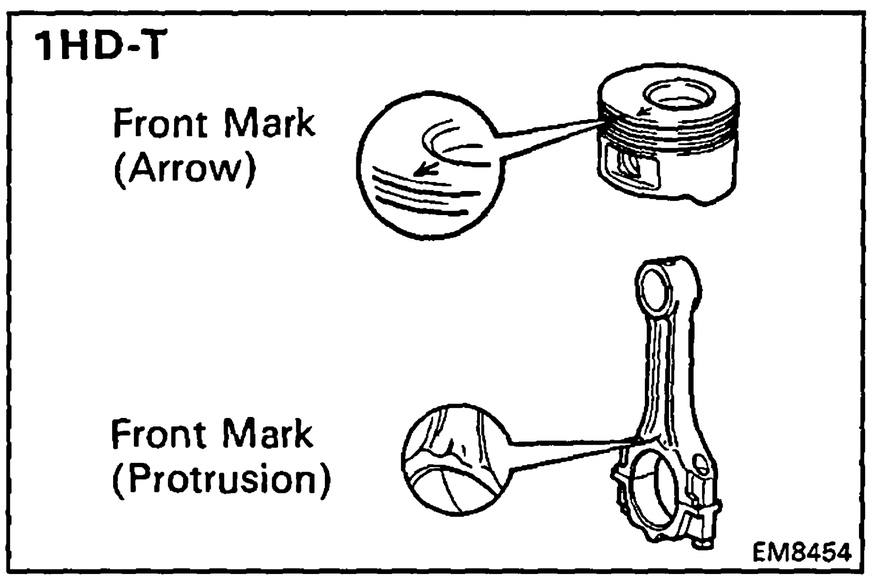

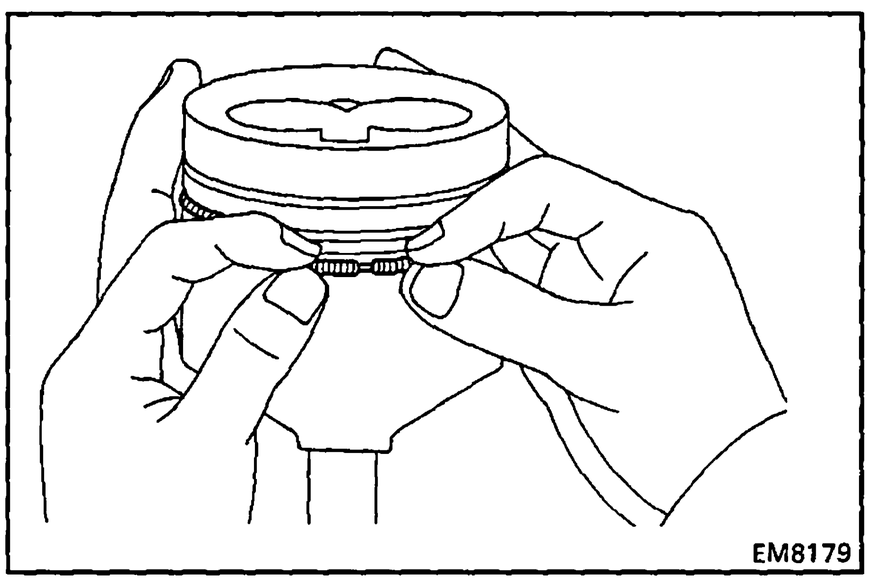

2. INSTALL PISTON RINGS

(a) Install the coil by hand.

(b) Using a piston ring expander, install the oil ring.

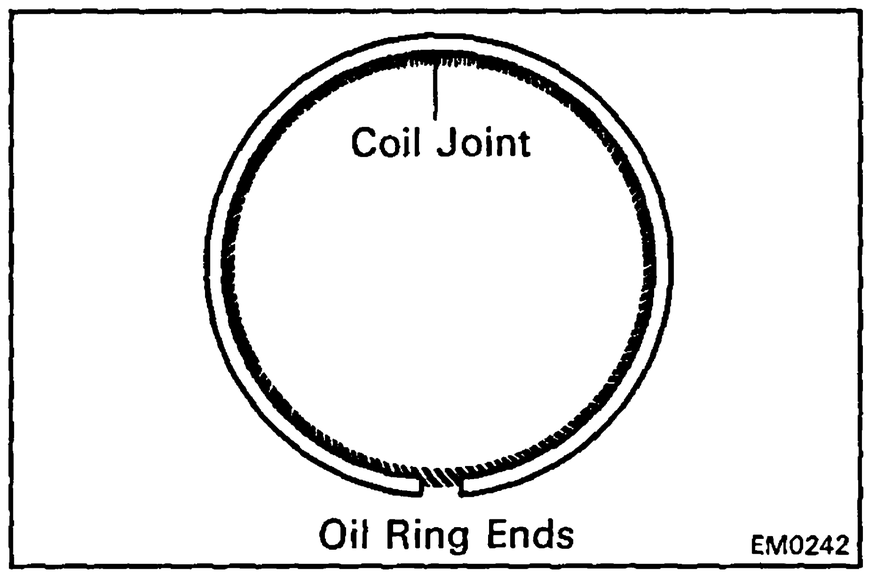

HINT: Face the end gap of the oil ring in the opposite direction of coil joint.

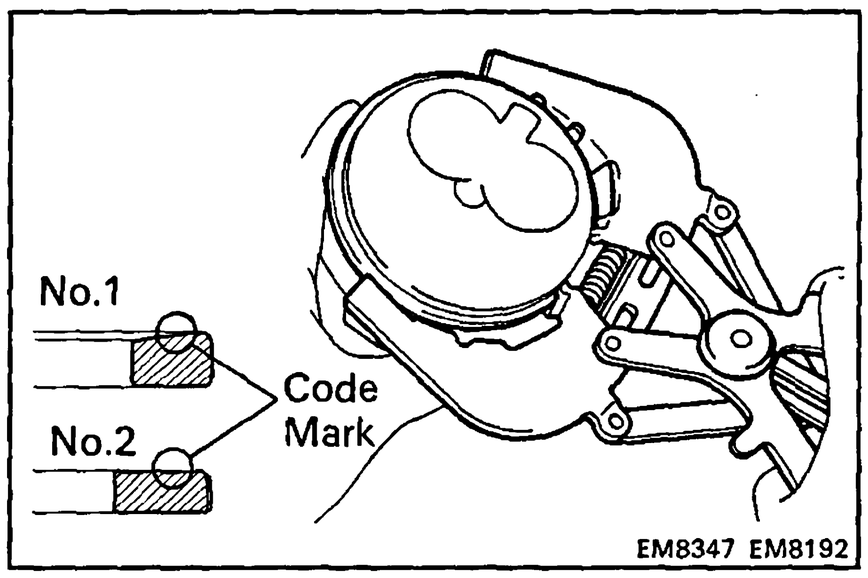

(c) Using a piston ring expander, install the two compression rings with the code mark facing upward.

Code mark: No.1 1T
No.2 2T

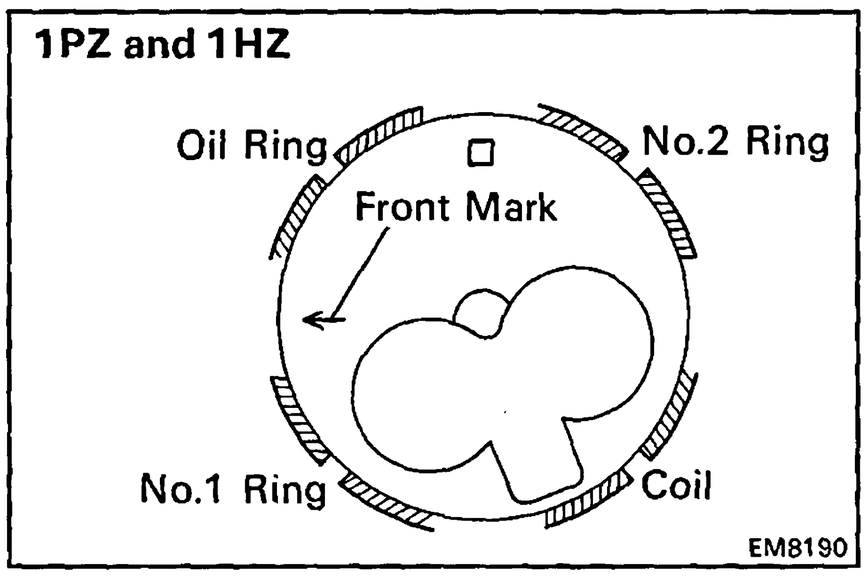

(d) Position the piston rings so that the ring ends are as shown.

NOTICE: Do not align the ring ends.

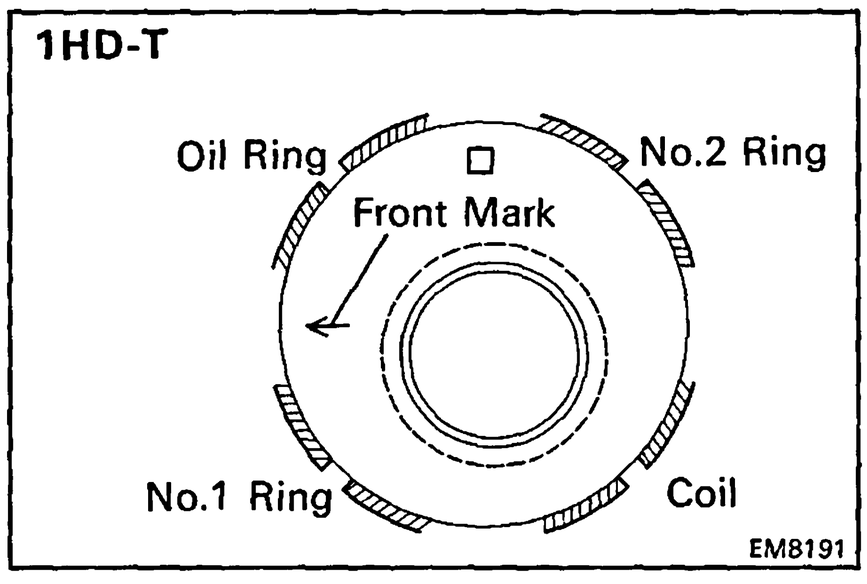

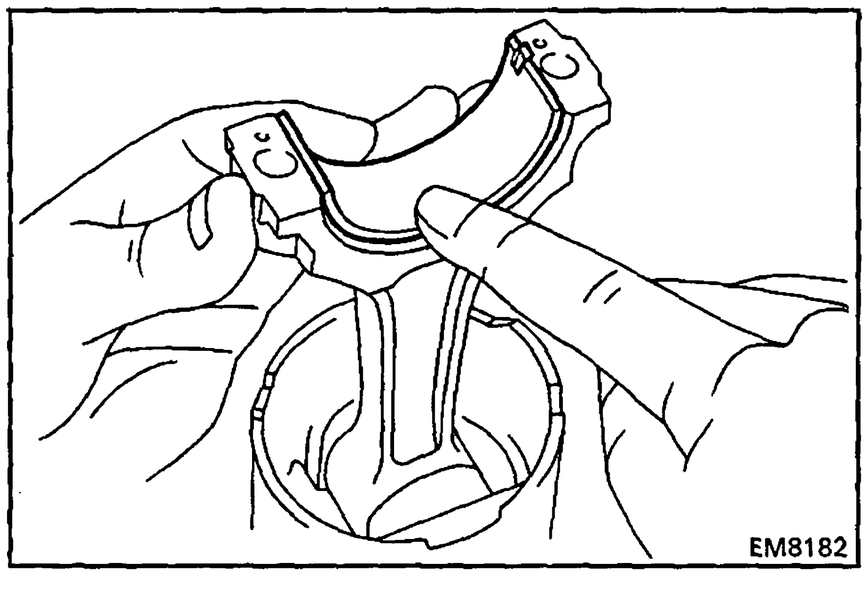

3. INSTALL BEARINGS

(a) Align the bearing claw with the claw groove of the connecting rod or connecting cap.

(b) Install the bearings in the connecting rod and connecting rod cap.

ASSEMBLY OF CYLINDER BLOCK

(See page EM-84)

HINT:
- Thoroughly clean all parts to be assembled.
- Before installing the parts, apply new engine oil to all sliding and rotating surfaces.
- Replace all gaskets, O-rings and oil seals with new parts.

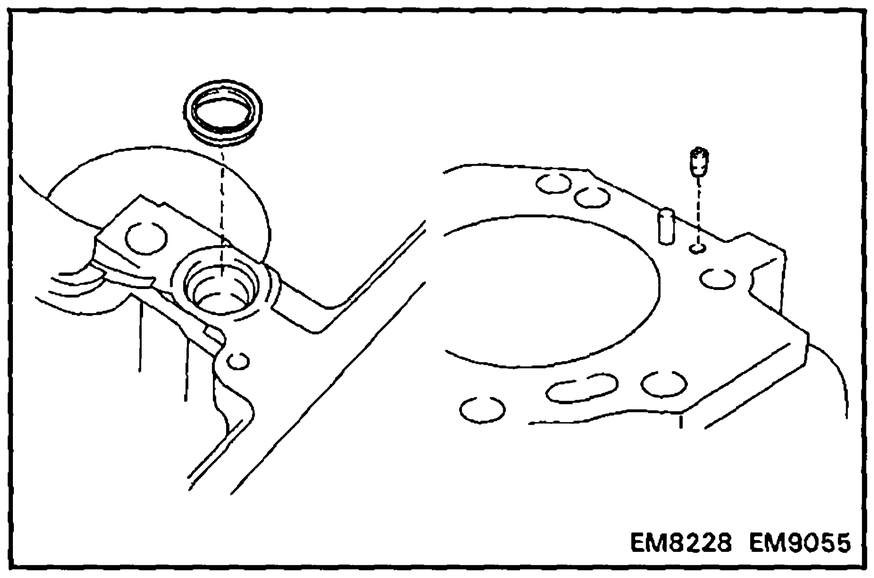
EM8228 EM9055

1. INSTALL NEW CYLINDER BLOCK OIL HOLE GASKET

2. INSTALL CYLINDER BLOCK ORIFICE

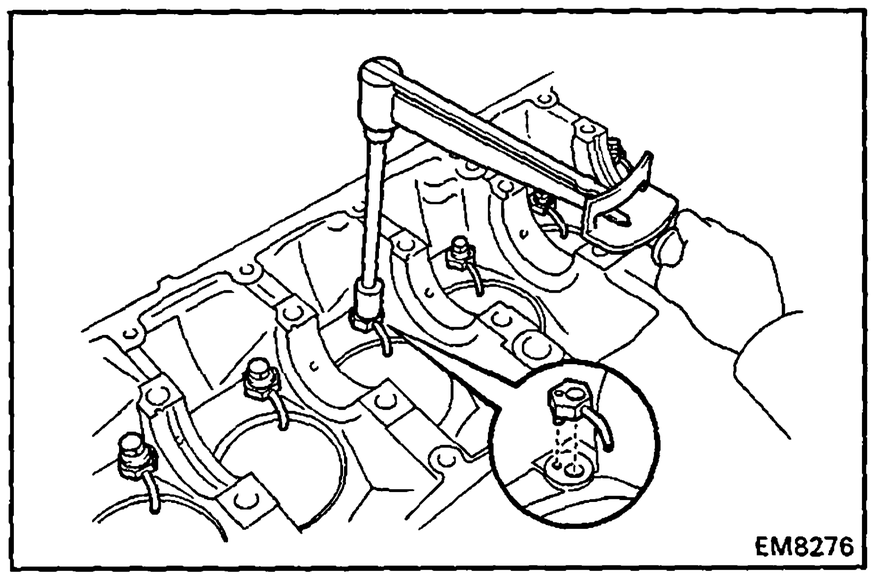
EM8276

3. INSTALL OIL NOZZLES AND CHECK VALVES

(a) Align the pin of the oil nozzle with the pin hole of the cylinder block.

(b) Install the oil nozzle with the check valve. Install the five (1PZ) or six (1HZ and 1HD-T) oil nozzles and check valves.

Torque: 275 kg-cm (20 ft-lb, 27 N·m)

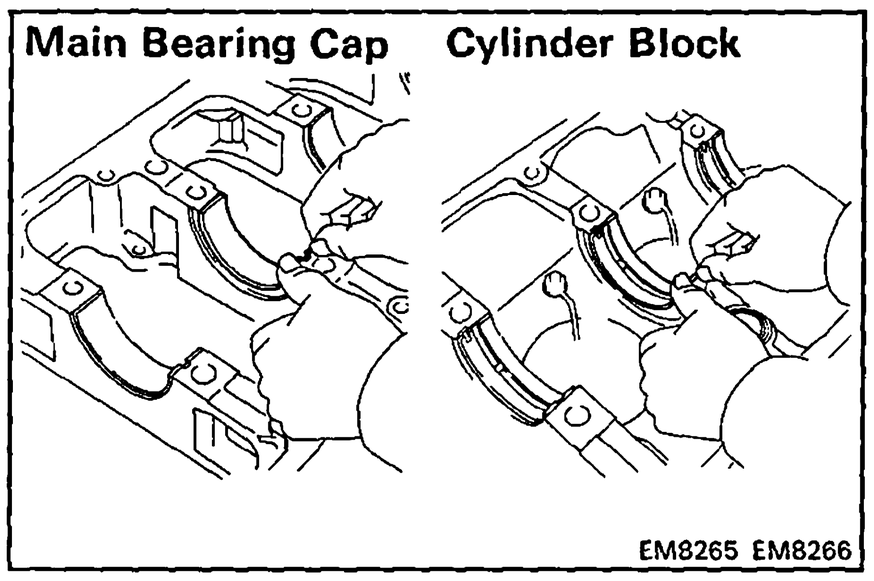

EM8265 EM8266

4. INSTALL MAIN BEARINGS

(a) Align the bearing claw with the claw groove of the main bearing cap or cylinder block.

(b) Install the bearings in the cylinder block and main bearing cap.

NOTICE: Install the bearing with the oil hole in the cylinder block.

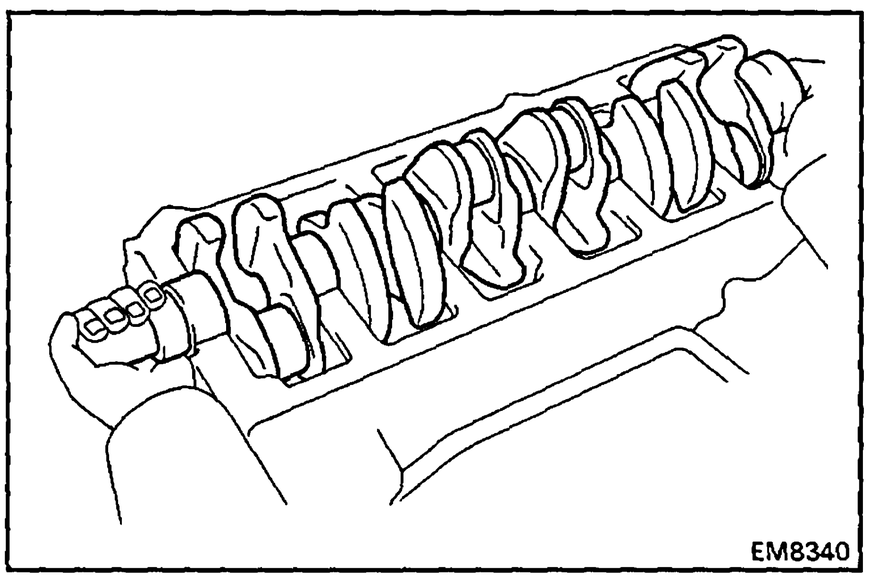
EM8340

5. PLACE CRANKSHAFT ON CYLINDER BLOCK

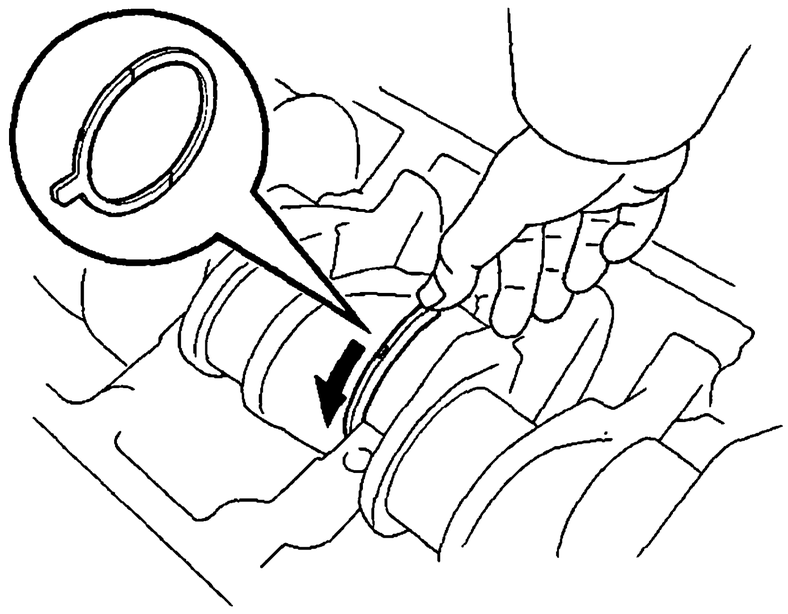

6. INSTALL THRUST WASHERS

(a) Push the crankshaft toward the front (rear) side.

(b) Install the thrust washers to the No.4 main journal position of the cylinder block with the oil grooves facing outward.

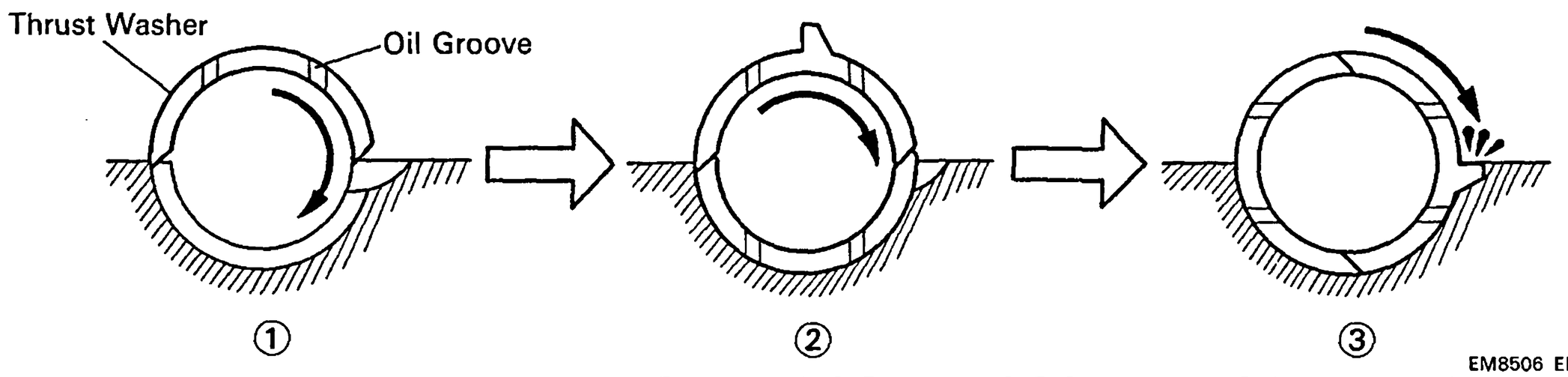

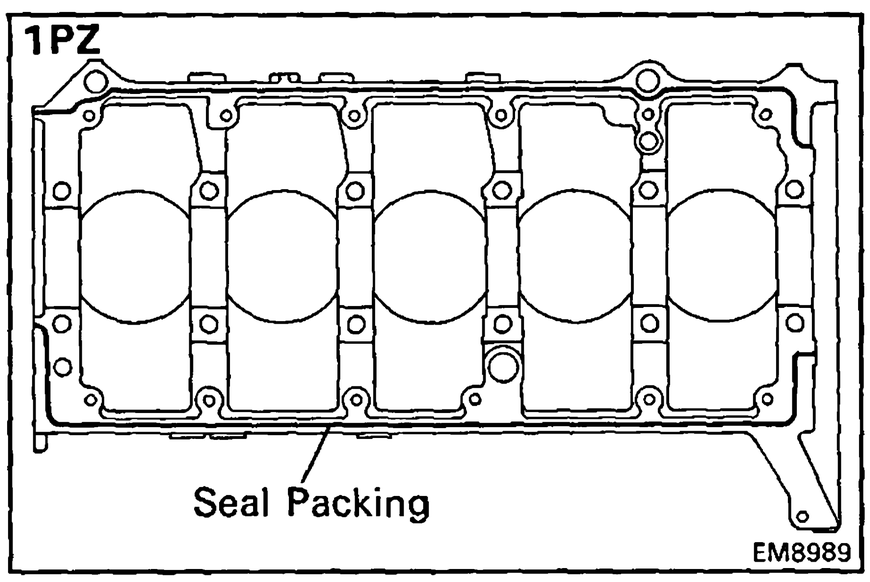

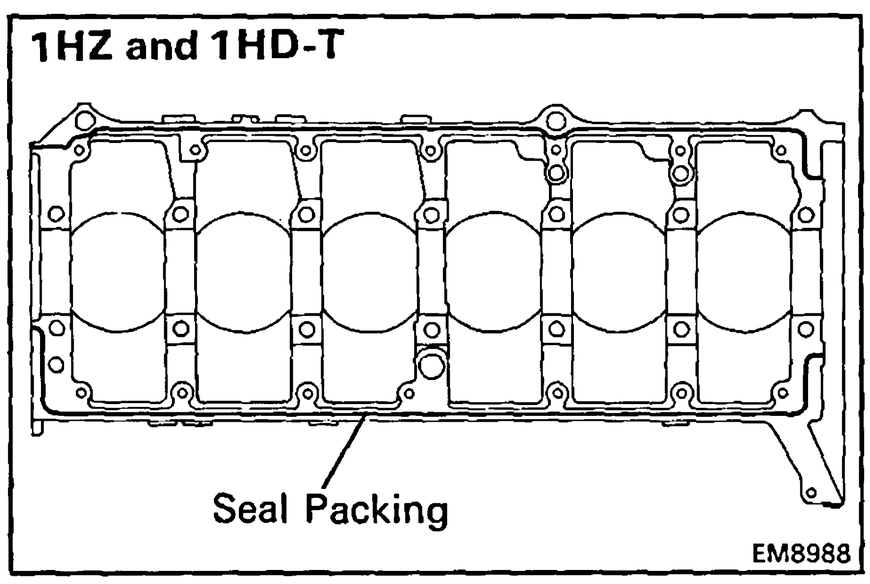

7. INSTALL MAIN BEARING CAP

A. Install main bearing cap on cylinder block

(a) Remove any old packing (FIPG) material and be careful not to drop any oil the contact surfaces of the main bearing cap and cylinder block.

- Thoroughly clean all components to remove all the loose material.
- Using a non-residue solvent, clean both sealing surfaces.

(b) Apply seal packing to the cylinder block as shown in the illustration.

Seal packing: Part No. 08826-00080 or equivalent

- Install a nozzle that has been cut to a 5 mm (0.20 in.) opening.
- Parts must be assembled within 5 minutes of application. Otherwise the material must be removed and reapplied.
- Immediately remove nozzle from the tube and reinstall cap.

B. Install main bearing cap bolts

HINT:

- The main bearing cap bolts are tightened in two progressive steps.
- If any of the main bearing bolts break or deform, replace them.

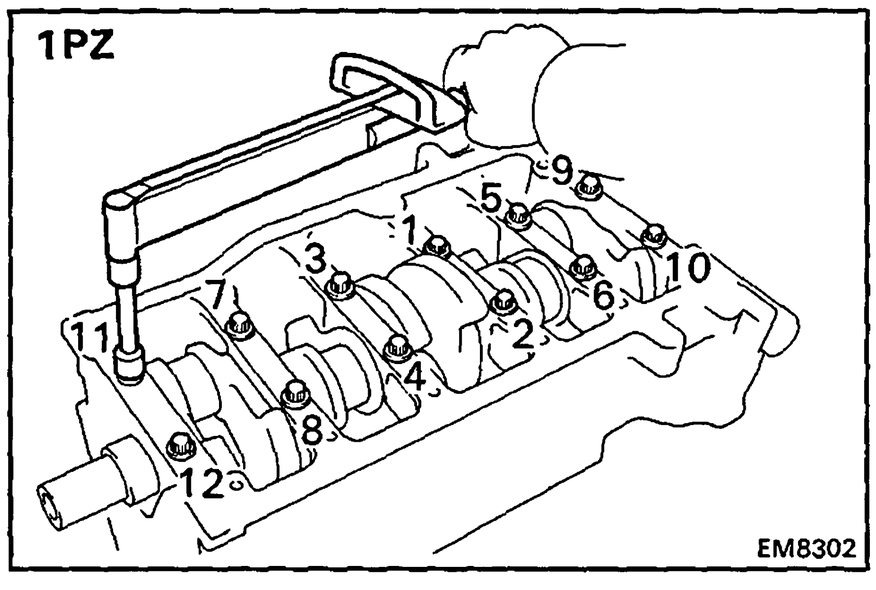

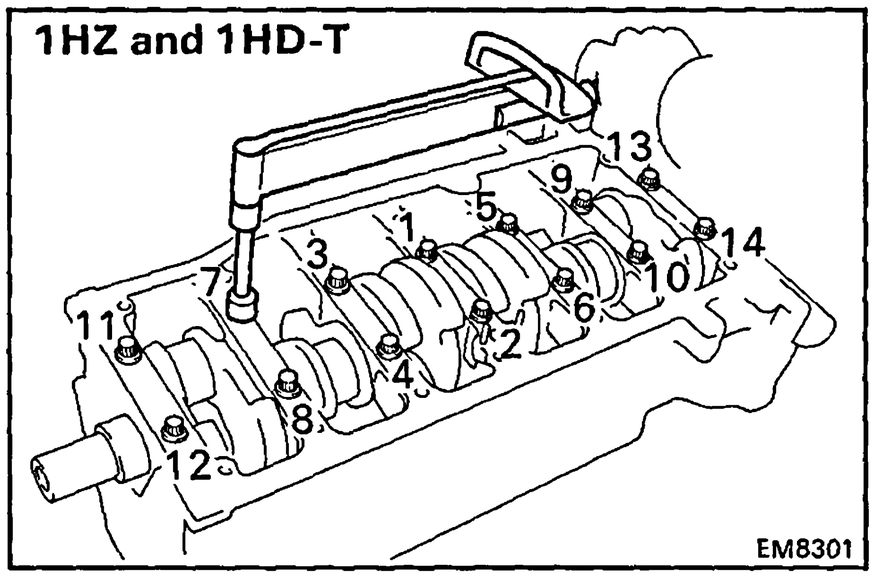

(a) Apply a light coat of engine oil on the threads and under the heads of the main bearing cap bolts.

(b) 1st, install and uniformly tighten the twelve (1PZ) or fourteen (1HZ and 1HD-T) main bearing cap bolts in several passes in the sequence shown.

Torque: 1,050 kg-cm (76 ft-lb, 103 N·m)

If any one of the main bearing cap bolts does not meet the torque specification, replace the main bearing cap bolt.

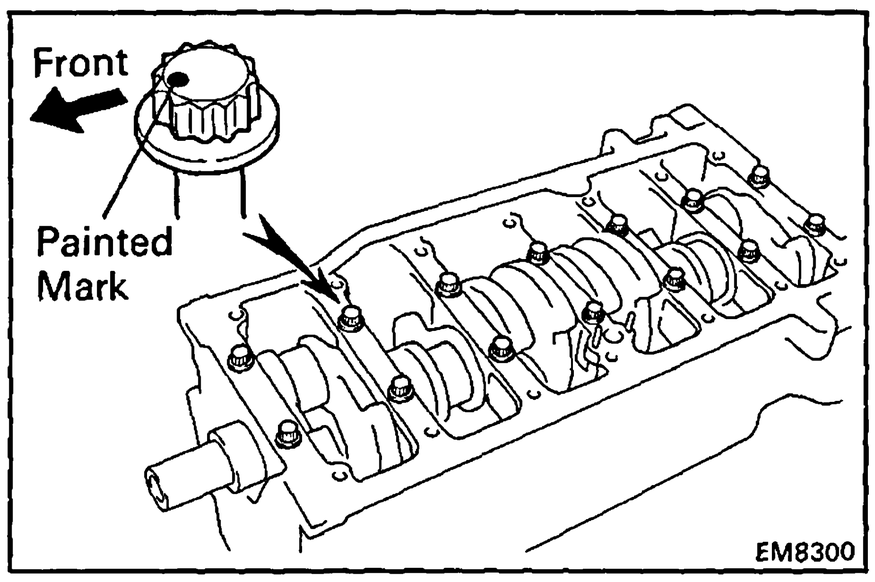

(c) Mark the front of the main bearing cap bolt head with paint.

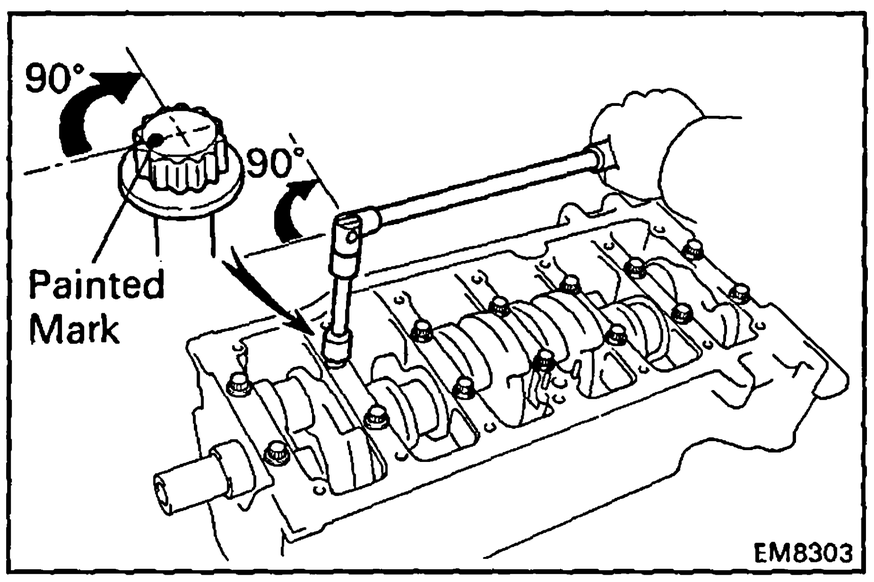

(d) 2nd, retighten the main bearing cap bolts 90° in the numerical order shown above.

(e) Check that the painted mark is now at a 90° angle to the front.

(f) Check that the crankshaft turns smoothly.

(g) Check the crankshaft thrust clearance.
(See step 5 on page EM-89)

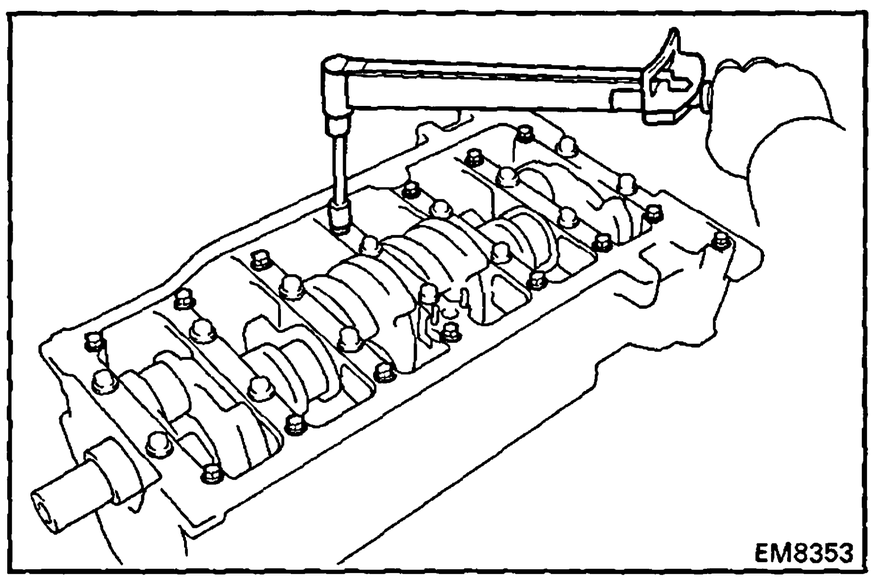

(h) Install and torque the thirteen bolts (1PZ) or fifteen bolts (1HZ and 1HD-T).

Torque: 185 kg-cm (13 ft-lb, 18 N·m)

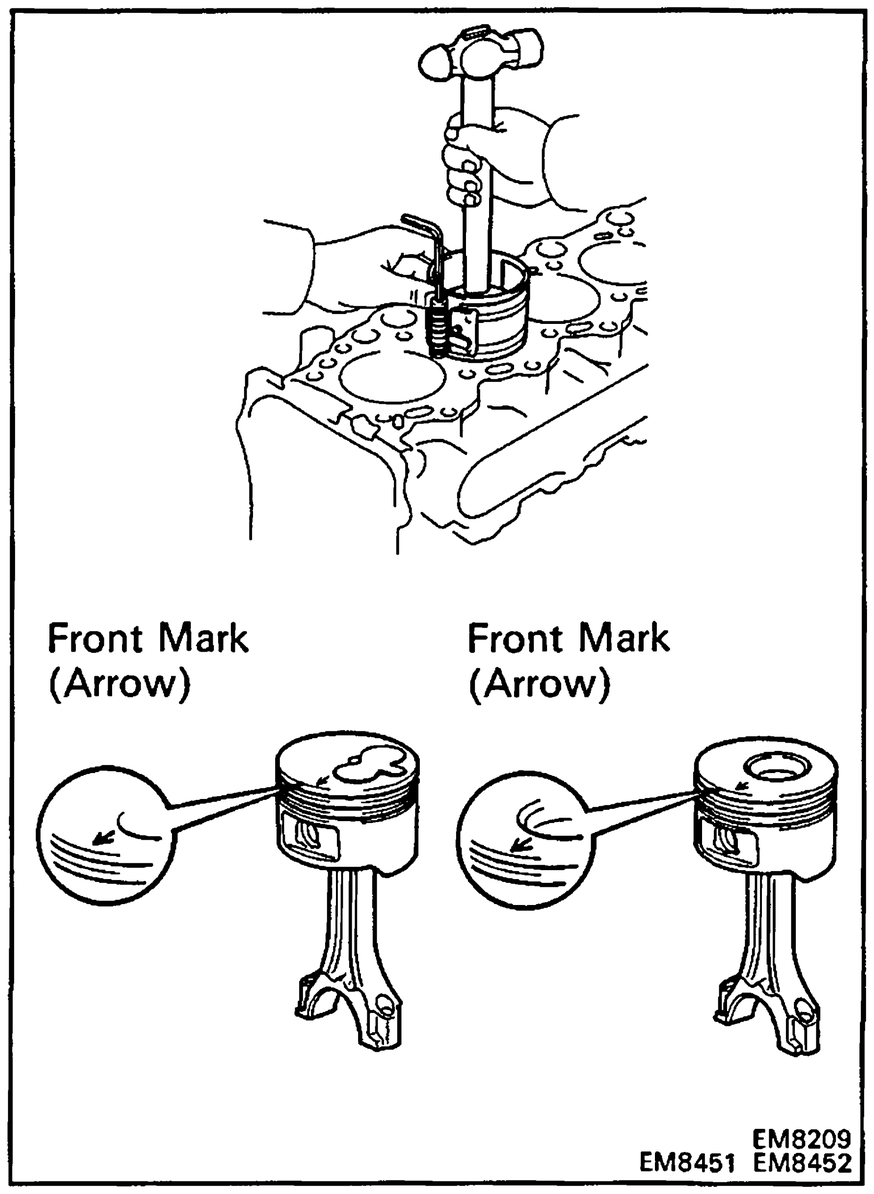

8. INSTALL PISTON AND CONNECTING ROD ASSEMBLIES

Using a piston ring compressor, push the correctly numbered piston and connecting rod assemblies into each cylinder with the front mark of the piston facing forward.

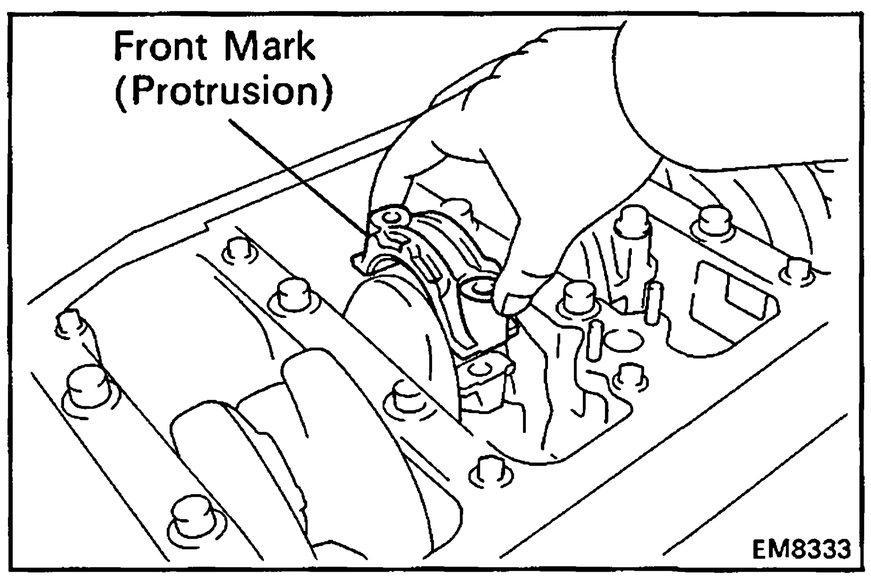

9. INSTALL CONNECTING ROD CAPS

A. Place connecting rod cap on connecting rod

(a) Match the numbered connecting rod cap with the connecting rod.

(b) Install the connecting rod cap with the front mark facing forward.

B. Install connecting rod cap bolts

HINT:

- The connecting rod cap bolts are tightened in two progressive steps.
- If any of the connecting rod bolts break or deform, replace them.

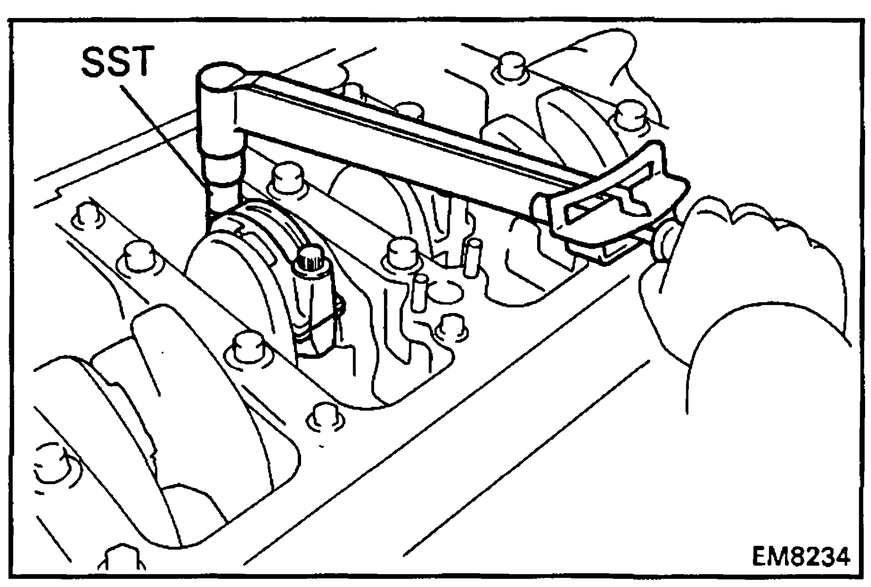

(a) Apply a light coat of engine oil on the threads and under the heads of the connecting rod cap bolts.

(b) 1st, using SST, install and alternately tighten the bolts of the connecting rod cap in several passes.

SST 09011-38121

Torque: 375 kg-cm (27 ft-lb, 37 N·m)

If any one of the connecting rod cap bolts does not meet the torque specification, replace the cap bolt.

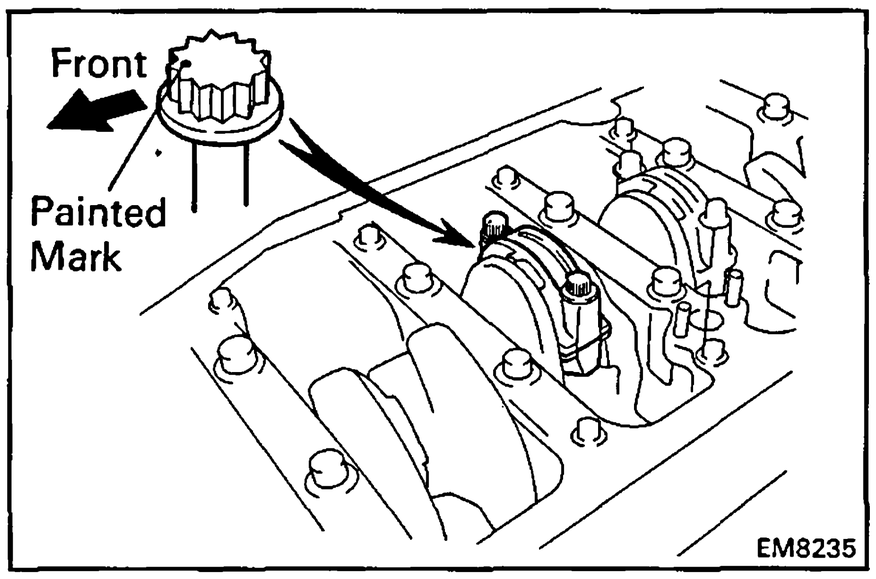

(c) Mark the front of the connecting rod cap bolt with paint.

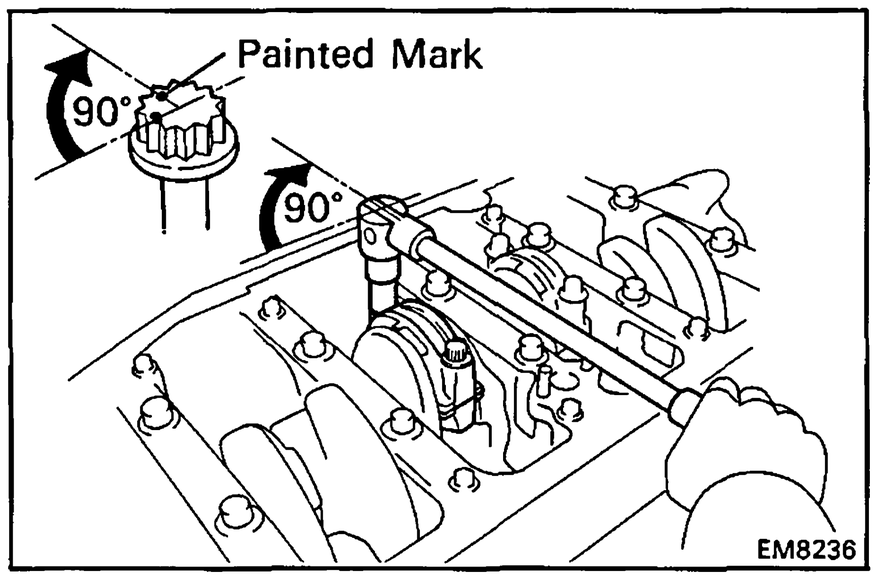

(d) 2nd, retighten the connecting rod cap bolts by an additional 90°.

(e) Check that the painted mark is now at a 90° angle to the front.

(f) Check that the crankshaft turns smoothly.

(g) Check the connecting rod thrust clearance. (See step 2 on page EM-86)

10. INSTALL REAR OIL SEAL RETAINER

(a) Remove any old packing (FIPG) material and be careful not to drop any oil on the contact surfaces of the rear oil seal retainer and cylinder block.

- Using a razor blade and gasket scraper, remove all the old packing (FIPG) material from the gasket surfaces and sealing groove.
- Thoroughly clean all components to remove all the loose material.
- Using a non-residue solvent, clean both sealing surfaces.

(b) Apply seal packing to the rear oil seal retainer as shown in the illustration.

Seal packing: Part No.08826-00080 or equivalent

- Install a nozzle that has been cut to a 2 – 3 mm (0.08 – 0.12 in.) opening.
- Parts must be assembled within 5 minutes of application. Otherwise the material must be removed and reapplied.
- Immediately remove nozzle from the tube and reinstall cap.

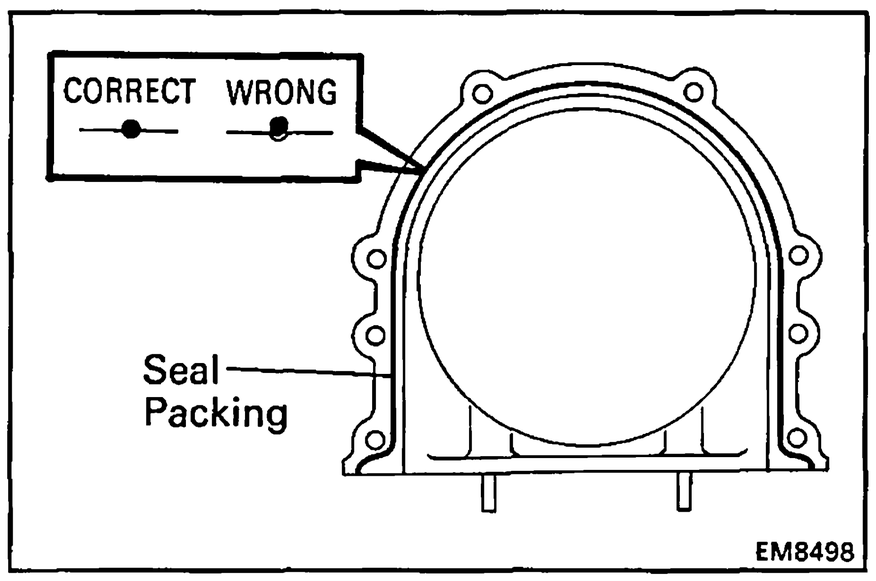

(c) Install the retainer with the six bolts.

Torque: 65 kg-cm (56 in.-lb, 6.4 N·m)

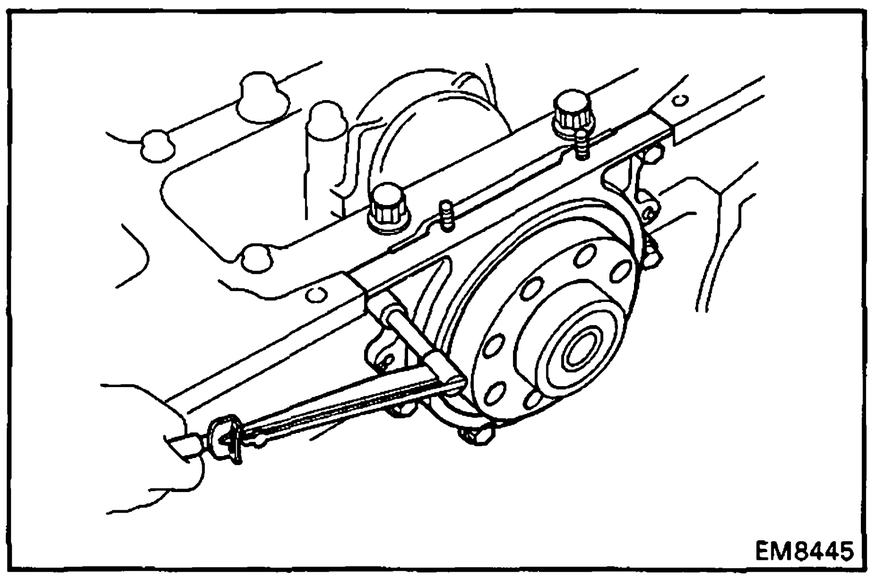

POST ASSEMBLY

1. **INSTALL ENGINE MOUNTING**
2. **INSTALL THERMOSTAT AND WATER INLET (See page CO-11)**
3. **INSTALL OIL COOLER (See page LU-18)**
4. **INSTALL TIMING GEAR CASE (OIL PUMP) AND OIL PAN (See page LU-12)**
5. **INSTALL INJECTION PUMP (See page FU-93)**
6. **INSTALL TIMING GEARS (See page EM-50)**
7. **INSTALL ALTERNATOR**
8. **INSTALL WATER PUMP (See page CO-8)**
9. **INSTALL CYLINDER HEAD (See page EM-75)**
10. **INSTALL PULLEYS AND TIMING BELT (See page EM-38)**
11. **REMOVE ENGINE STAND**
12. **INSTALL REAR END PLATE**

    Install the end plate with the bolt.

    Torque: 185 kg-cm (13 ft-lb, 18 N·m)

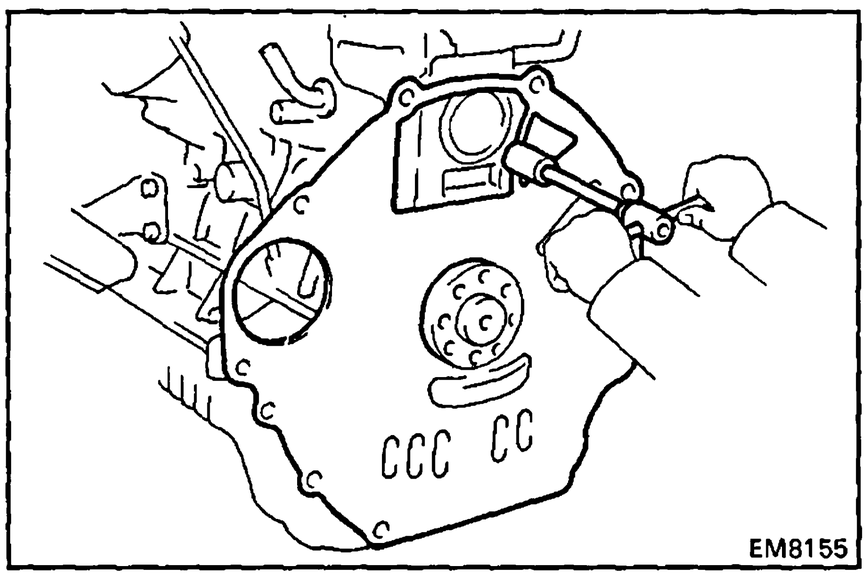

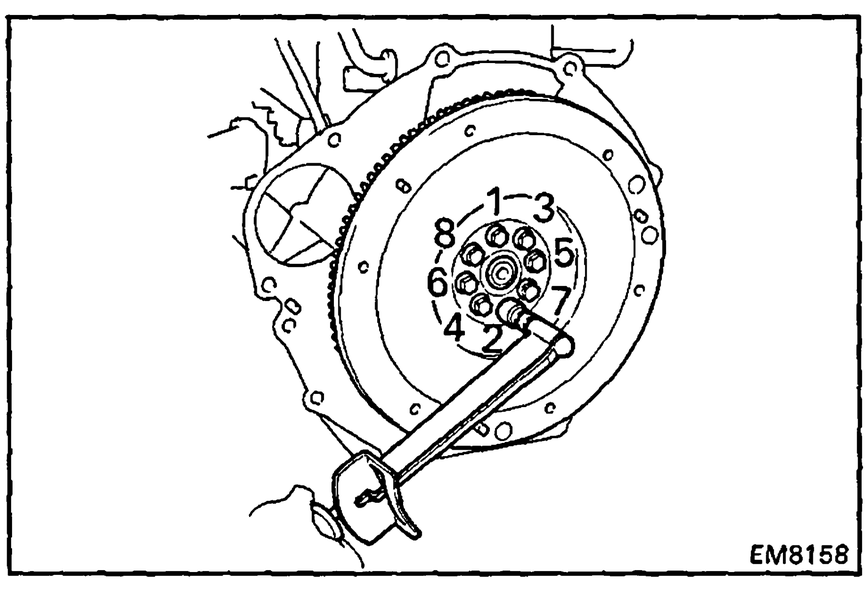

13. **(M/T)**
    INSTALL FLYWHEEL
    (a) Install the flywheel on the crankshaft.
    (b) Install and uniformly tighten the eight mount bolts in several passes, in the sequence shown.

    Torque: 1,300 kg-cm (94 ft-lb, 127 N·m)

14. **(A/T)**
    INSTALL FLYWHEEL, DRIVE PLATE AND SPACER (See procedure step 13)

    Torque: 1,300 kg-cm (94 ft-lb, 127 N·m)

15. **(M/T)**
    INSTALL CLUTCH DISC AND COVER

TURBOCHARGER

	Page
DESCRIPTION	TC-2
PRECAUTIONS	TC-4
TROUBLESHOOTING	TC-5
TURBOCHARGER ELECTRICAL SYSTEM DIAGNOSIS (HZJ80)	TC-7
TURBOCHARGER	TC-8

DESCRIPTION

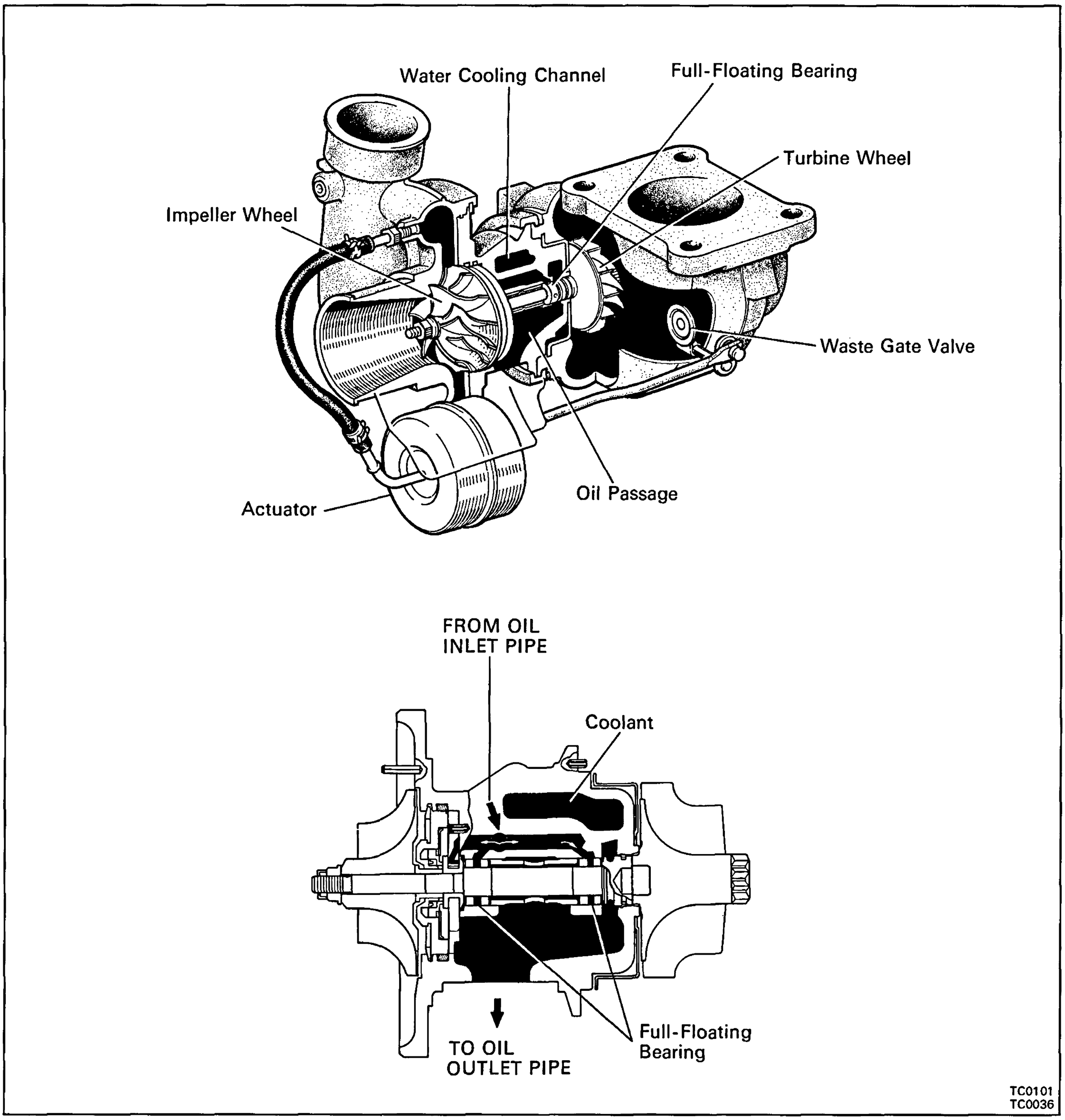

System which increase the amount of air sent to the engine are either turbocharger type (using exhaust gas to turn the turbine) or supercharger type (using the engine crankshaft, etc. to mechanically turn the pump, etc.). For LAND CRUISER and COASTER 1HD-T engine, the turbocharger type has been adopted.

The turbocharger is a device which increases engine output by introducing a greater amount of air to the engine. This allows a proportional increase in the fuel that can be burned and hence raises the potential power output.

In other words, by installing a special turbocharger and providing a higher air than usual, engine output can be increased by increasing the average combustion pressure without increasing the engine speed.

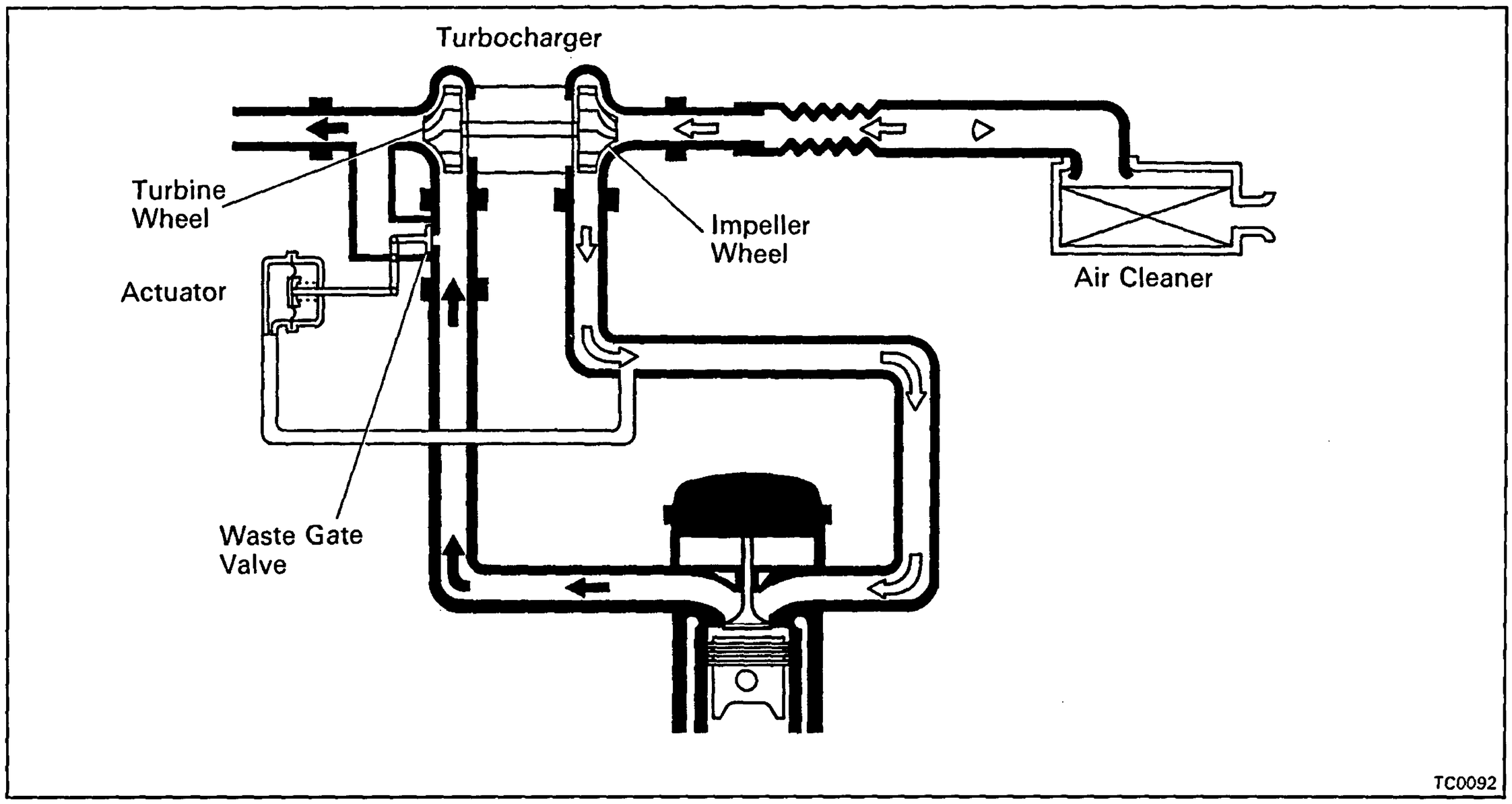

Operation of Turbocharger

Exhaust gas acts on the turbine wheel inside the turbine housing, causing it to revolve. When the turbine wheel revolves, the impeller wheel which is located on the same shaft also revolves, compressing the intake air which has passed through the air cleaner. When expelled from the compressor housing the compressed air is supplied to the cylinders. When the engine speed increases, the exhaust gas volume increases and the turbine wheel revolutions increasa (approx. 20,000 – 115,000 rpm), thus the turbocharged air pressure grows greater and engine output increases.

Waste Gate Valve

If the turbocharged air pressure exceeds the prescribed air pressure, the flow of exhaust gas by-passes the turbine, controlling turbine wheel revolutions and turbocharged air pressure. This by-pass valve which controls the quantity of exhaust gas flowing to the turbine is called the waste gate valve. When the charged air pressure exceeds the prescribed pressure, the actuator operates, the waste gate valve opens and part of the exhaust gas by-passes the turbine. This causes a drop in the turbine revolution rate and controls the charged air pressure within the prescribed limits.

PRECAUTIONS

1. Do not stop the engine immedialtely after pulling a trailer or high speed or uphill driving. Idle the engine for 20 – 120 seconds, depending on the severity of the driving condition.

2. Avoid sudden racing or acceleration immediately after starting a cold engine.

3. If the turbocharger is defective and must be replaced, first check for the cause of the defect in reference to the following items and replace parts if necessary:
   - Engine oil level and quality
   - Conditions under which the turbocharger was used
   - Oil lines leading to the turbocharger

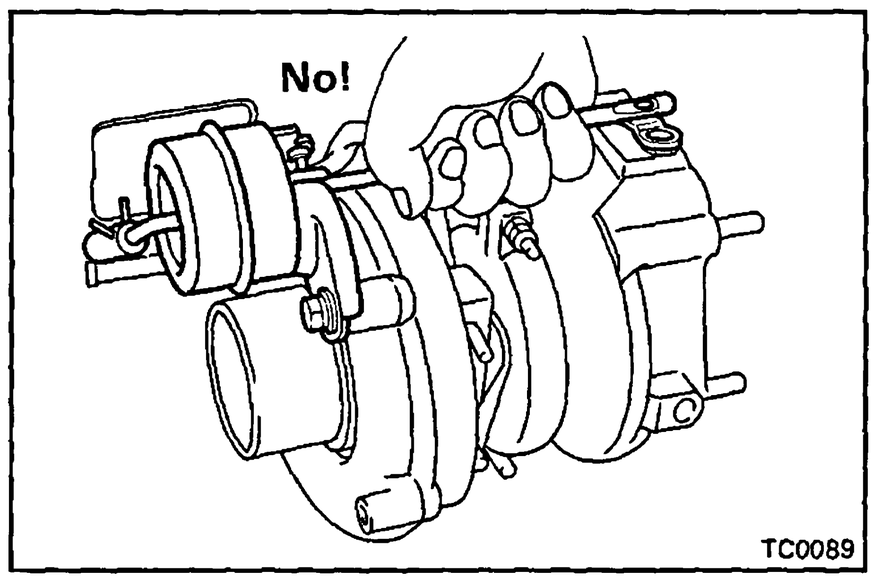

4. Use caution when removing and reinstalling the turbocharger assembly. Do not drop it or bang it against anything or grasp it by easily-deformed parts, such as the actuator or rod, when moving it.

5. Before removing the turbocharger, plug the intake and exhaust ports and oil inlet to prevent entry of dirt or other foreign material.

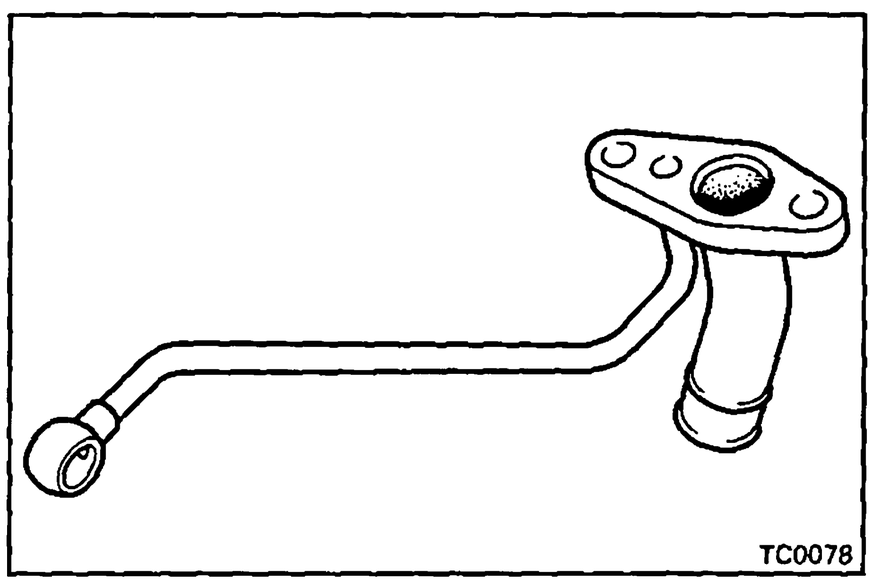

6. If replacing the turbocharger, check for accumulation of sludge particles in the oil pipes and, if necessary, replace the oil pipes.

7. Completely remove the gasket adhered to the lubrication oil pipe flange and turbocharger oil flange.

8. If replacing bolts or nuts, do so only with the specified new ones to guard against breakage or deformation.

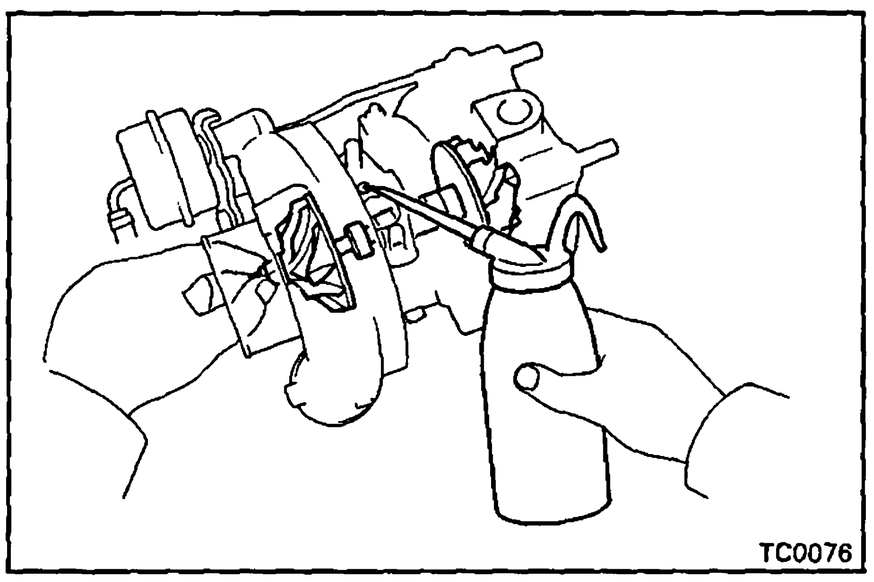

9. If replacing the turbocharger, put 20 cc (1.2 cu in.) of oil into the turbocharger oil inlet and turn the impeller wheel by hand to spread oil to the bearing.

10. If overhauling or replacing the engine, cut the fuel supply after reassembly and crank the engine for 30 seconds to distribute oil throughout the engine. Allow the engine to idle for 60 seconds.

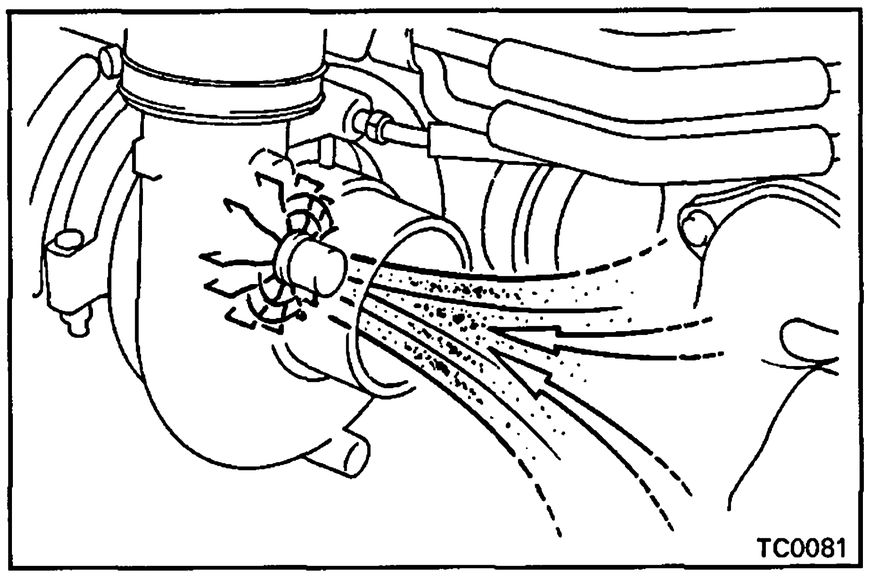

11. If the engine is running with the air cleaner, case cover and hose removed, foreign particles entering will damage the wheels which run at extremely high speed.

TROUBLESHOOTING

HINT: Before troubleshooting the turbocharger, first check the engine itself. (Valve clearance, engine compression, injection timing etc.)

INSUFFICIENT ACCELERATION, LACK OF POWER OR EXCESSIVE FUEL CONSUMPTION

(Possible Cause)	(Check Procedure and Correction Method)
1. TURBOCHARGING PRESSURE TOO LOW	Check turbocharging pressure. (See page TC-8) **Turbocharging pressure:** **0.50 – 0.65 kg/cm^2** **(7.1 – 9.2 psi, 49 – 64 kPa)** If the pressure is below specification, begin diagnosis from item 2.
2. RESTRICTED INTAKE AIR SYSTEM	Check intake air system, and repair or replace parts as necessary. (See page TC-8)
3. LEAK IN INTAKE AIR SYSTEM	Check intake air system, and repair or replace parts as necessary. (See page TC-8)
4. RESTRICTED EXHAUST SYSTEM	Check exhaust system, and repair or replace parts as necessary. (See page TC-8)
5. LEAK IN EXHAUST SYSTEM	Check exhaust system, and repair or replace parts as necessary. (See page TC-8)
6. ERRATIC TURBOCHARGER OPERATION	Check rotation of impeller wheel. If it does not turn or turns with a heavy drag, replace the turbocharger assembly. Check plays of turbine shaft. (See page TC-12) **Axial play: 0.13 mm (0.0051 in.) or less** **Radial play: 0.18 mm (0.0071 in.) or less** If not within specification, replace the turbocharger assembly.

ABNORMAL NOISE

(Possible Cause)	(Check Procedure and Correction Method)
1. TURBOCHARGER INSULATOR RESONANCE	Check for loose, improperly installed or deformed insulator mount bolts and nuts, and repair or replace as necessary.
2. EXHAUST PIPE LEAKING OR VIBRATING	Check for exhaust pipe deformation, loose mount bolts or a damaged gasket, and repair or replace as necessary.
3. ERRATIC TURBOCHARGER OPERATION	Refer to item 6 of INSUFFICIENT ACCELERATION, LACK OF POWER OR EXCESSIVE FUEL CONSUMPTION.

EXCESSIVE OIL CONSUMPTION OR WHITE EXHAUST

(Possible Cause)	(Check Procedure and Correction Method)
FAULTY TURBOCHARGER OIL SEAL	Check for oil leakage in exhaust system. • Remove the turbine elbow from the turbocharger and check for excessive carbon deposits on the turbine wheel. Excessive carbon deposits would indicate a faulty turbocharger. Check for oil leakage in intake air system. • Check for plays in turbine shaft, and replace the turbocharger if necessary. (See page TC-12) **Axial play: 0.13 mm (0.0051 in.) or less** **Radial play: 0.18 mm (0.0071 in.) or less**

TURBOCHARGER ELECTRICAL SYSTEM DIAGNOSIS (HZJ80)

TROUBLESHOOTING OF TURBOCHARGER INDICATOR LIGHT AND WARNING LIGHT OPERATION

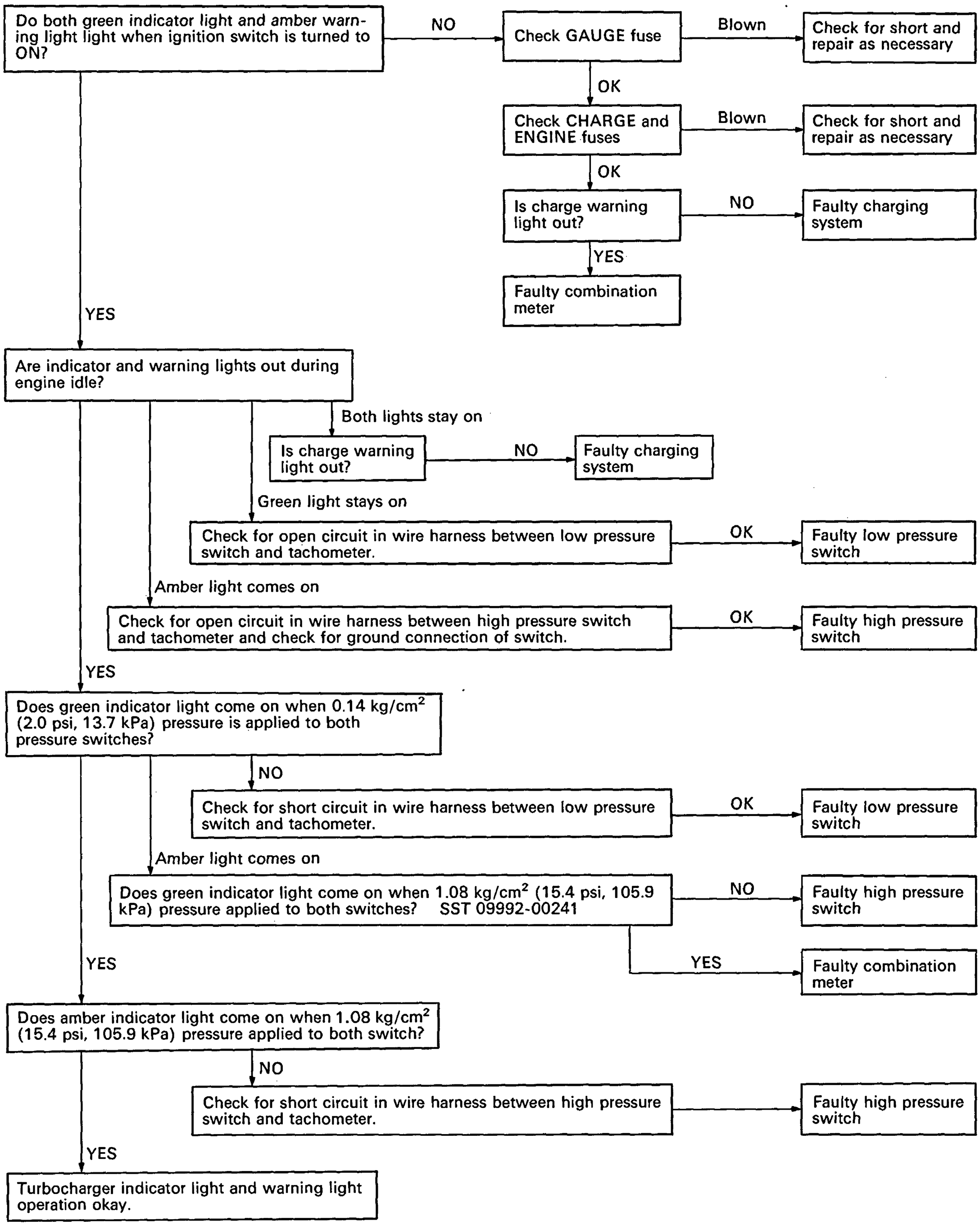

TURBOCHARGER

ON-VEHICLE INSPECTION OF TURBOCHARGER

1. INSPECT INTAKE AIR SYSTEM

Check for leakage or clogging between the air cleaner and turbocharger inlet and between the turbocharger outlet and cylinder head.

- Clogged air cleaner .... Clean or replace the element
- Hoses collapsed or deformed .... Check each connection and repair
- Cracks in components .... Check and replace

2. INSPECT EXHAUST SYSTEM

Check for leakage or clogging between the cylinder head and turbocharger inlet and between the turbocharger outlet and exhaust pipe.

- Deformed components .... Repair or replace
- Foreign material in passages .... Remove
- Leakage from components .... Repair or replace
- Cracks in components .... Check and replace

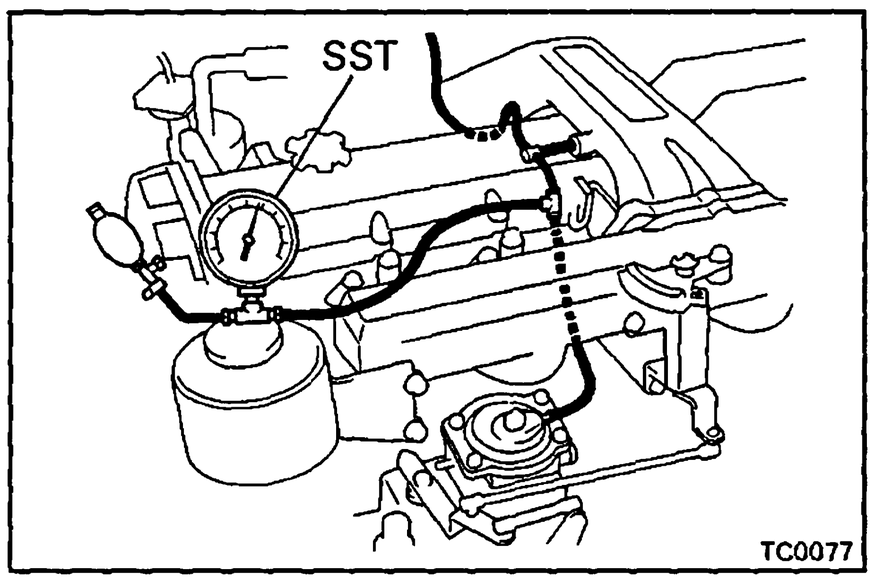

3. CHECK TURBOCHARGING PRESSURE

(a) Warm up engine.

(b) Connect a 3-way union to the intake pipe pressure hose and install SST (turbocharger pressure gauge) to it.

SST 09992-00241

(b) Press in the clutch pedal, then press the accelerator pedal down as far as it will go. Measure the turbocharging pressure at maximum speed (4,400 rpm).

Standard pressure: 0.50 – 0.65 kg/cm^2 (7.1 – 9.2 psi, 49 – 64 kPa)

If the pressure is less than specification, check the intake air and exhaust systems for leakage. If there is no leakage, replace the turbocharger assembly.
If the pressure is above specification, check if the actuator hose is disconnected or cracked. If not, replace the turbocharger assembly.

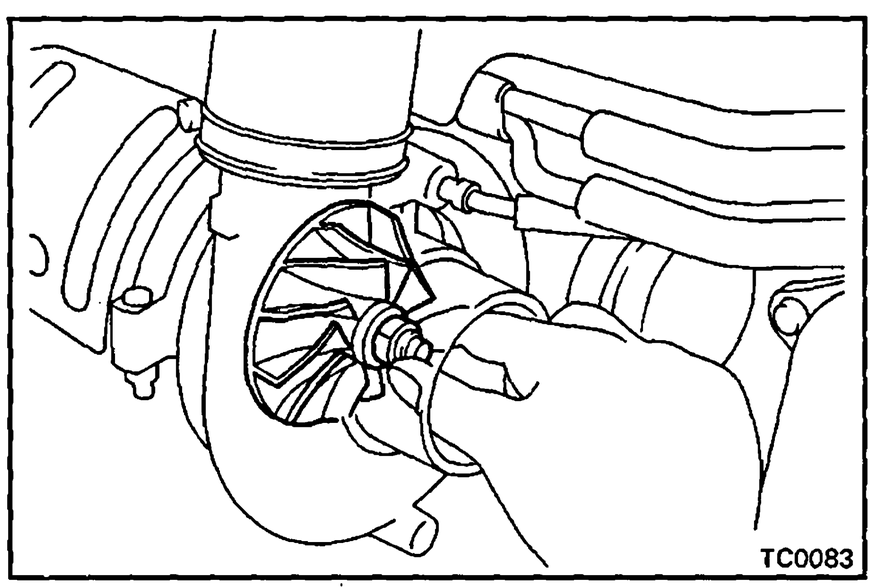

4. INSPECT IMPELLER WHEEL ROTATION

(a) Disconnect the air cleaner hose.

(b) Grasp the edge of the impeller wheel and turn it. Check that it turns smoothly.

If it does not turn or if it turns with drag, replace the turbocharger assembly.

COMPONENTS

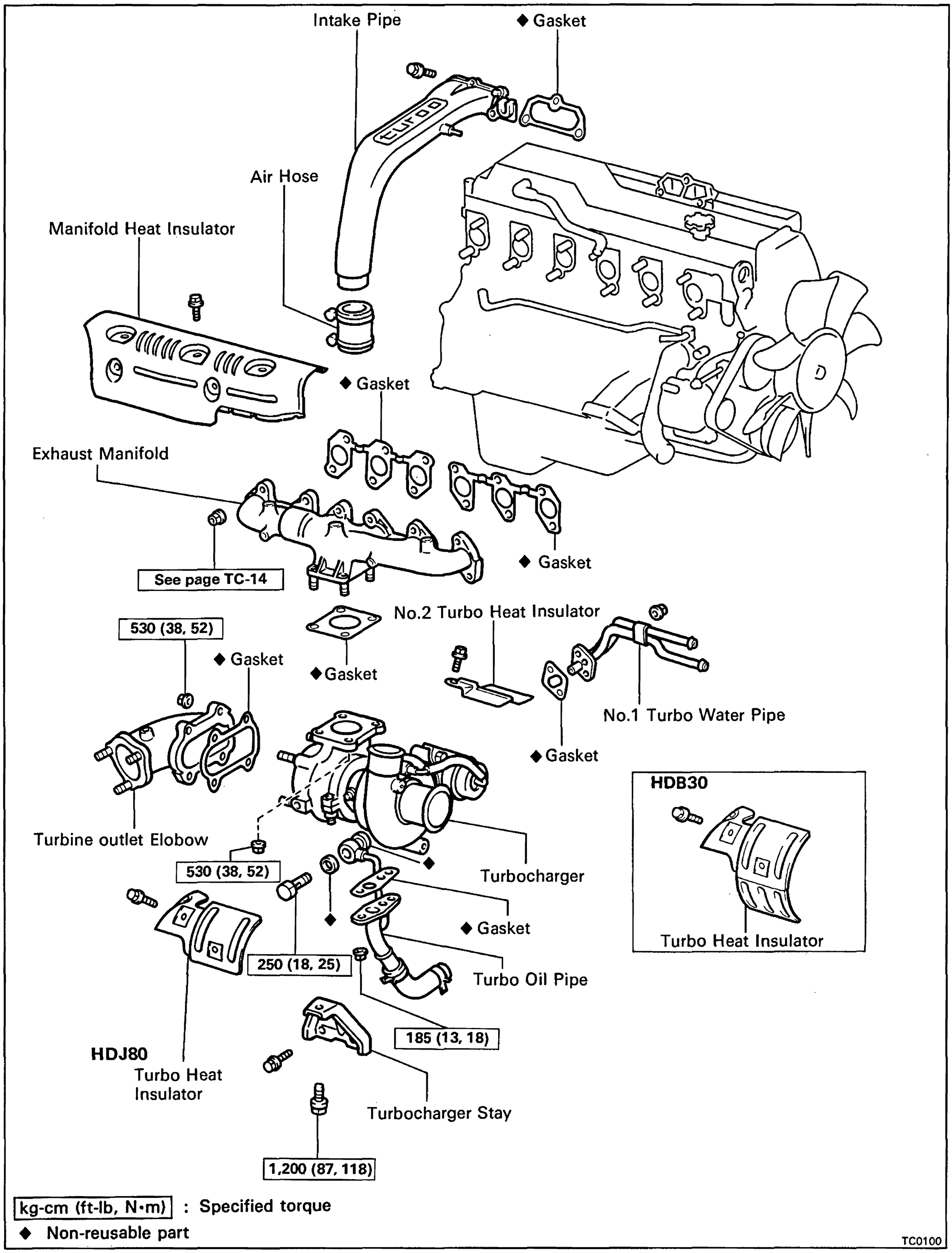
Intake Pipe
◆ Gasket
Air Hose
Manifold Heat Insulator
◆ Gasket
Exhaust Manifold
See page TC-14
◆ Gasket
No.2 Turbo Heat Insulator
530 (38, 52)
◆ Gasket
◆ Gasket
No.1 Turbo Water Pipe
◆ Gasket
HDB30
Turbo Heat Insulator
Turbine outlet Elobow
530 (38, 52)
Turbocharger
◆ Gasket
250 (18, 25)
Turbo Oil Pipe
185 (13, 18)
HDJ80
Turbo Heat Insulator
Turbocharger Stay
1,200 (87, 118)
kg-cm (ft-lb, N•m) : Specified torque
◆ Non-reusable part
TC0100

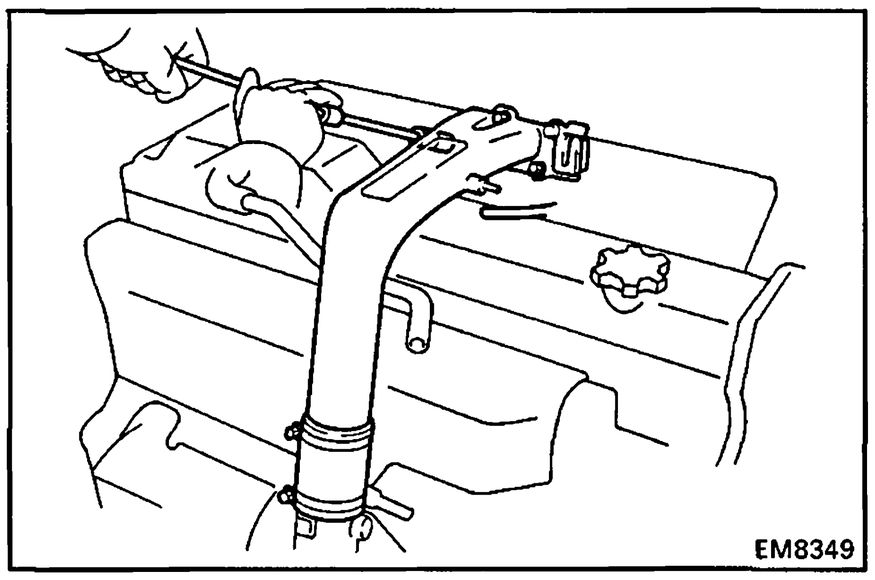

REMOVAL OF TURBOCHARGER

(See page TC-9)

1. **DRAIN ENGINE COOLANT (See page CO-4)**

2. **REMOVE INTAKE PIPE**
   (a) Disconnect the vacuum hose for the boost compensator.
   (b) Disconnect the air hose clamp bolt.
   (c) Remove the three bolts and intake pipe.

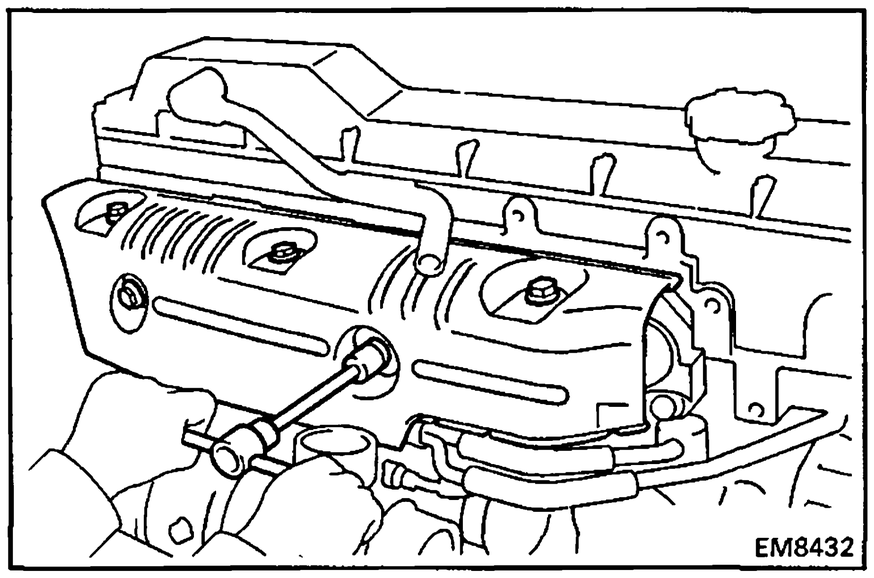

3. **REMOVE EXHAUST MANIFOLD HEAT INSULATOR**
   Remove the five bolts and heat insulator.

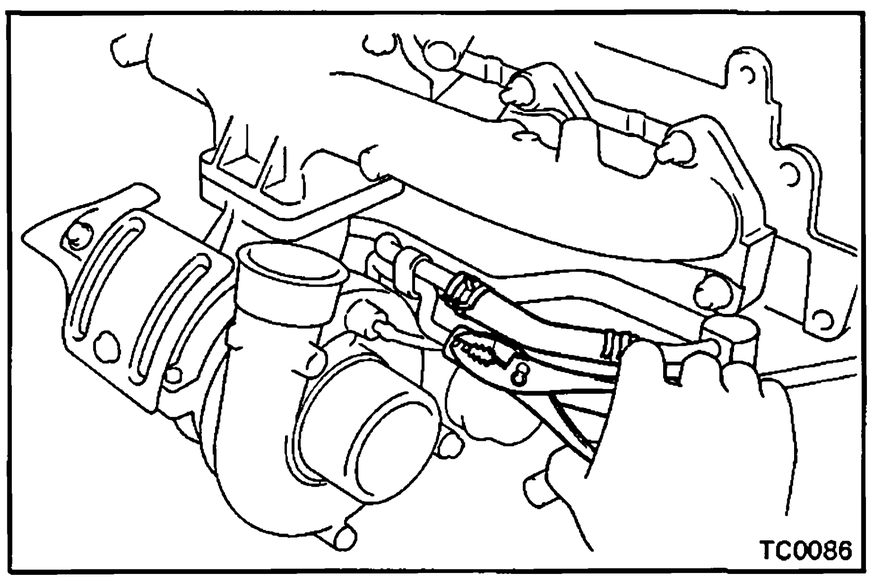

4. **DISCONNECT WATER BY-PASS HOSES**

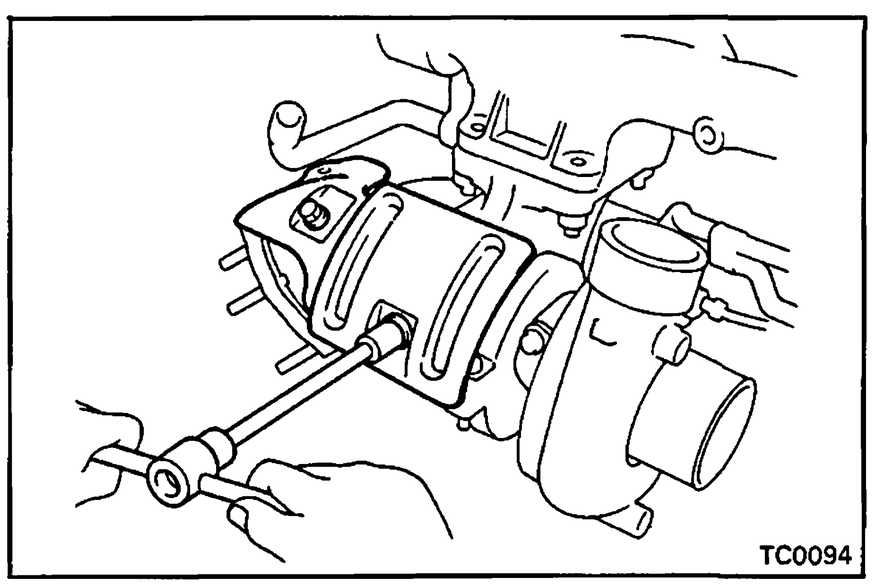

5. **REMOVE TURBO HEAT INSULATOR**
   Remove the two bolt and heat insulator.

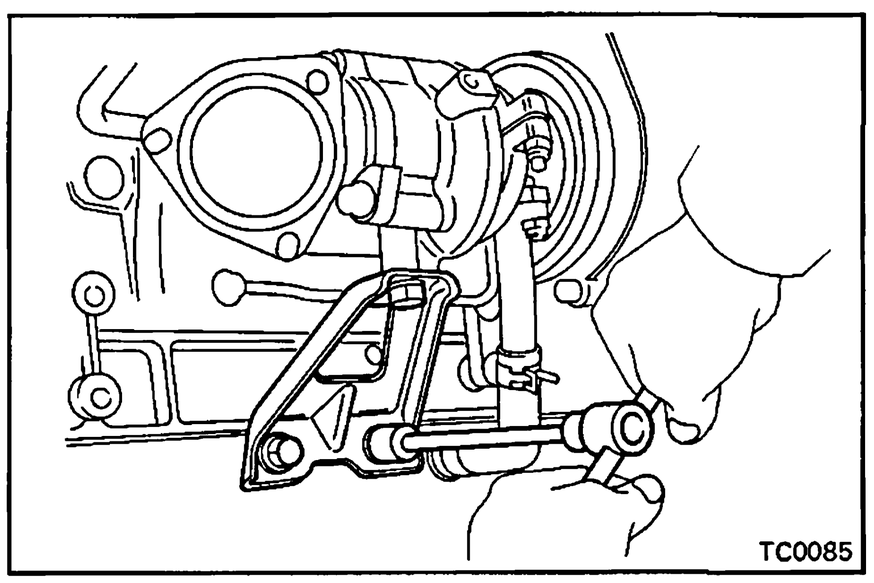

6. **REMOVE TURBOCHARGER STAY**
   Remove the three bolts and turbocharger stay.

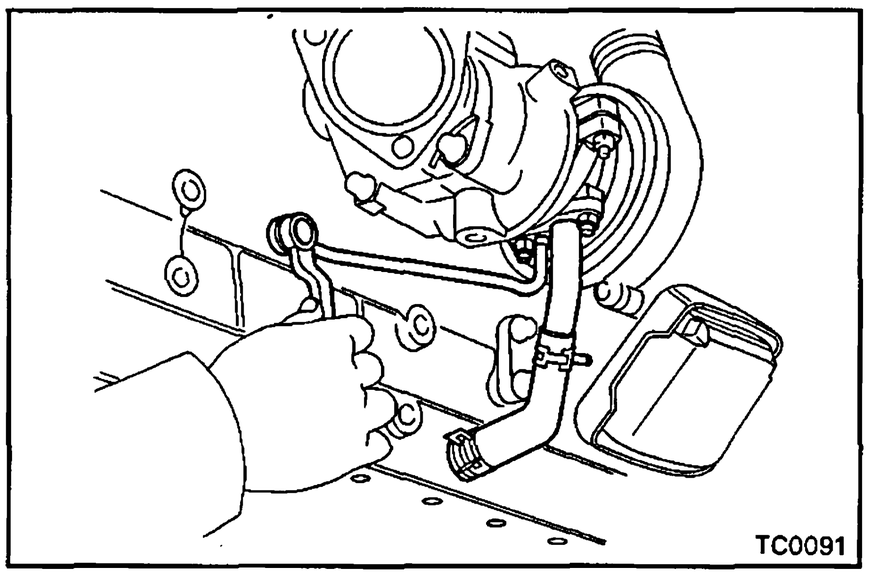

7. REMOVE TURBO OIL PIPE

(a) Remove the union bolt and two gaskets holding the turbo oil pipe to the cylinder block.

(b) Disconnect the turbo oil hose.

(c) Remove the two nuts, turbo oil pipe and gasket.

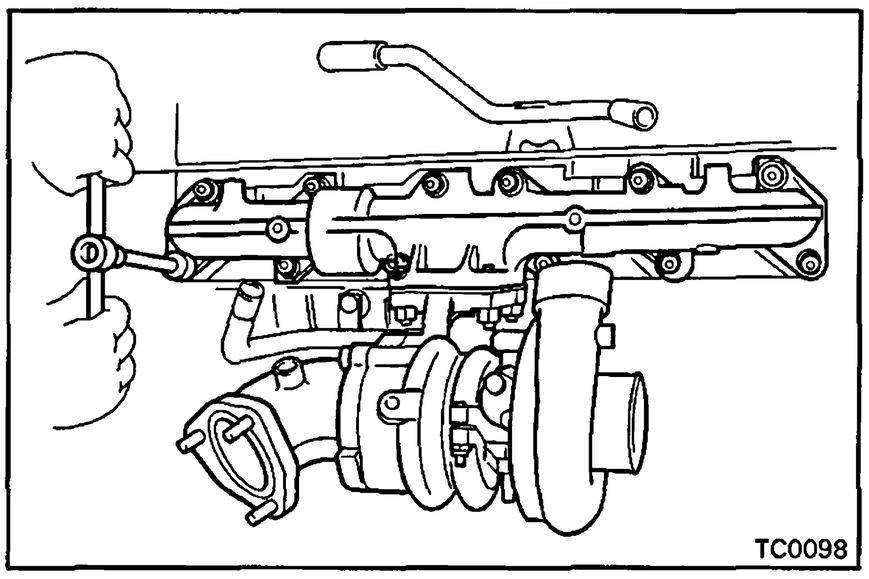

8. REMOVE TURBOCHARGER AND EXHAUST MANIFOLD ASSEMBLY

Remove the twelve nuts, the turbocharger and exhaust manifold assembly and gaskets.

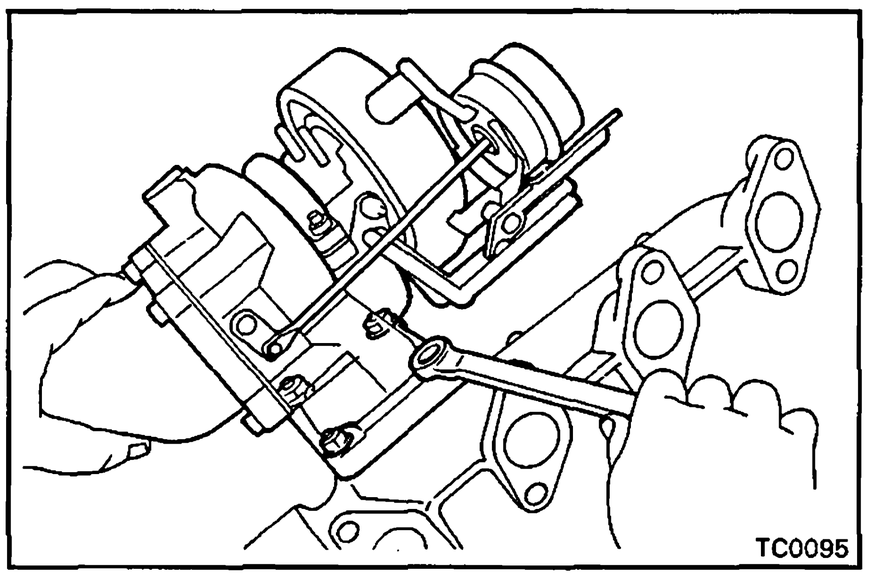

9. SEPARATE TURBOCHARGER AND EXHAUST MANIFOLD

Remove the four nuts, turbocharger and gasket.

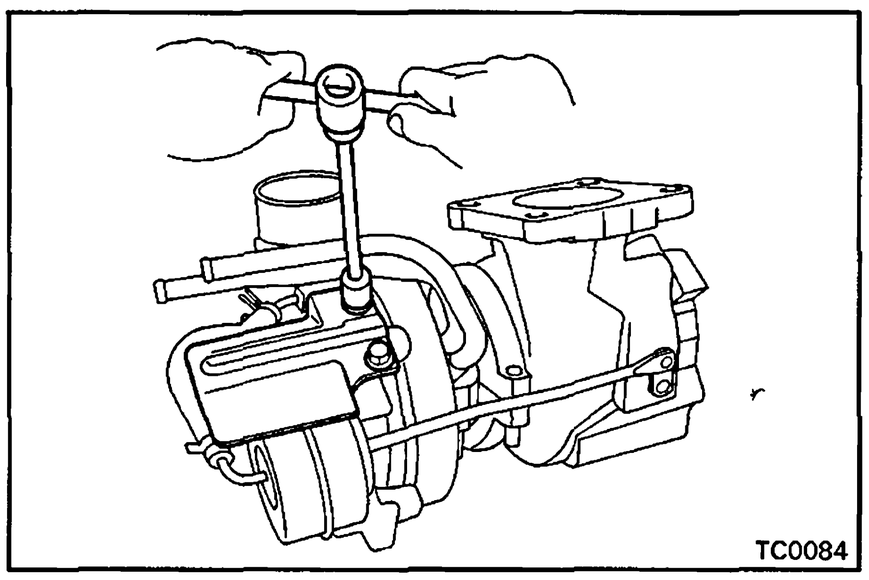

10. REMOVE NO.2 TURBO HEAT INSULATOR

Remove the two bolts and No.2 turbo heat insulator.

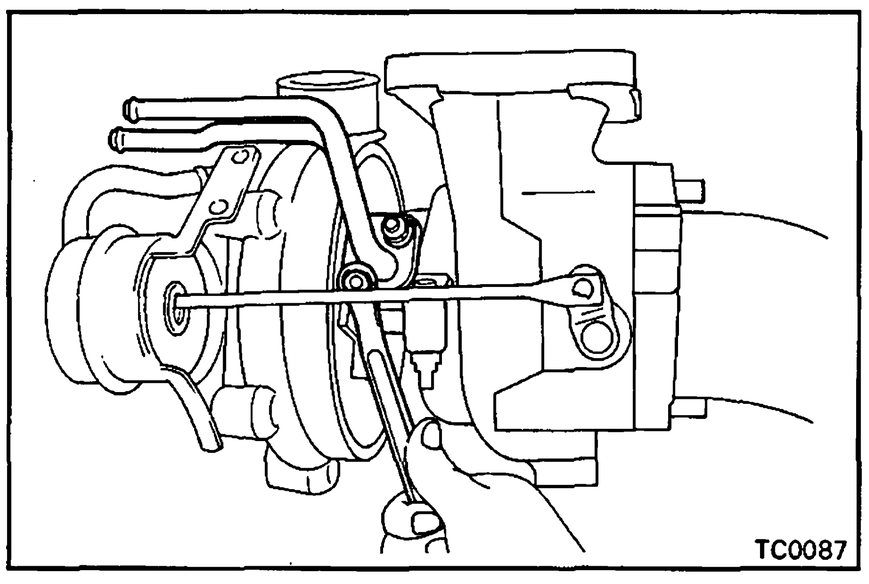

11. REMOVE NO.1 TURBO WATER PIPE

Remove the two nuts, No.1 turbo water pipe and gasket.

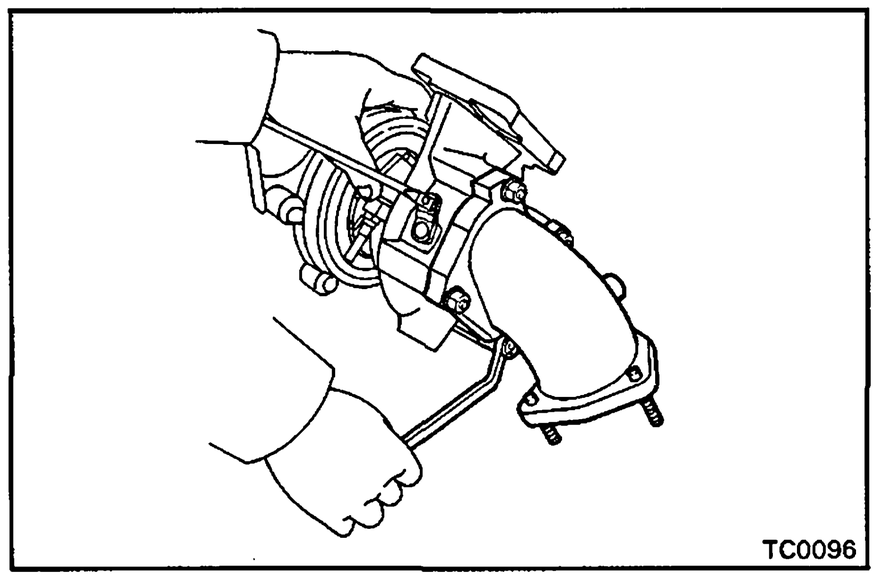

12. REMOVE TURBINE OUTLET ELBOW

Remove the four nuts, turbine outlet elbow and gasket.

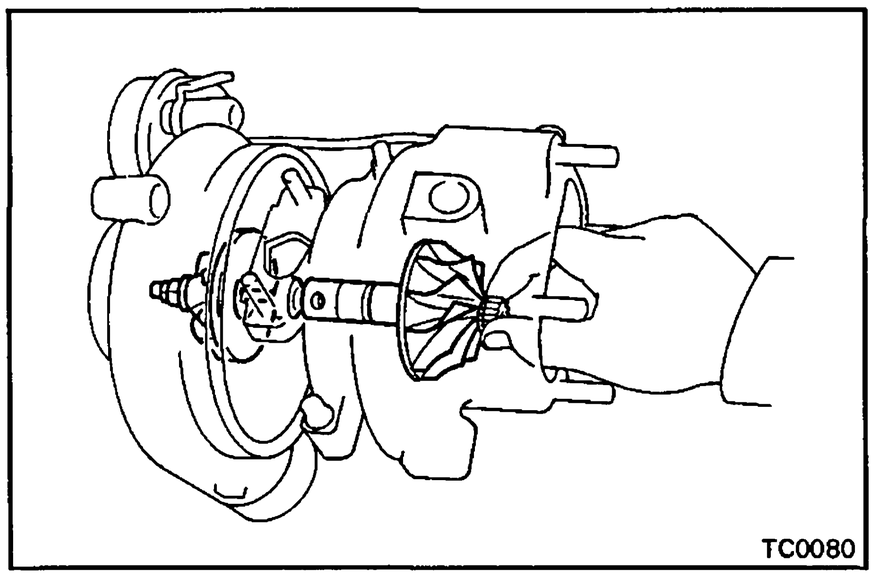

INSPECTION OF TURBOCHARGER

1. INSPECT IMPELLER WHEEL ROTATION

Grasp the edge of the turbine wheel and turn it. Check that the impeller wheel turns smoothly.

If the impeller wheel does not turn or if it turns with a drag, replace the turbocharger assembly.

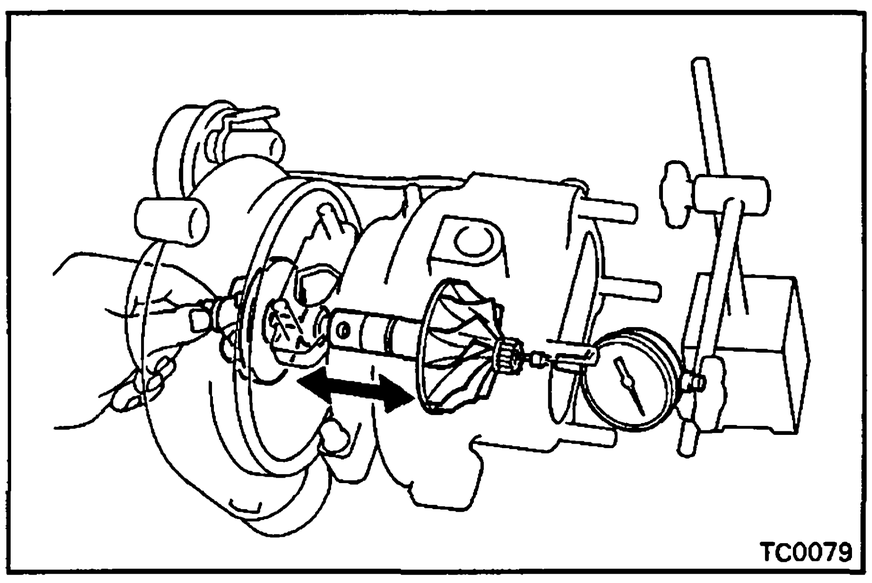

2. INSPECT AXIAL PLAY OF IMPELLER WHEEL

Insert a dial indicator into the exhaust side, hold the turbine wheel edge by hand and check the axial play.

Axial play: 0.13 mm (0.0051 in.) or less

If the axial play is not as specified, replace the turbocharger assembly.

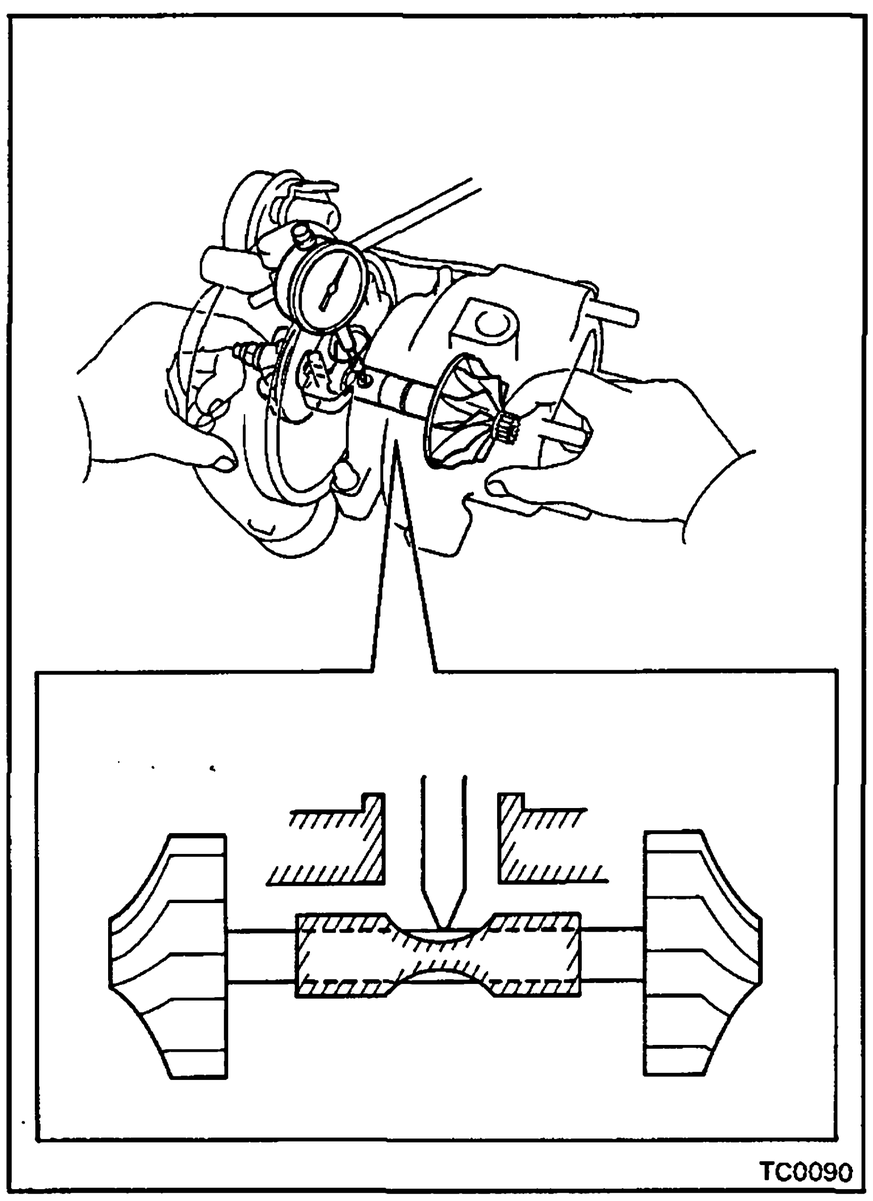

3. INSPECT RADIAL PLAY OF TURBINE SHAFT

(a) From the oil outlet hole, insert the dial indicator through the hole in the spacer bearing and set it in the center of the turbine shaft.

(b) Moving the turbine shaft in a radial direction, measure the radial play of the shaft.

Radial play: 0.18 mm (0.0071 in.) or less

If the radial play is not as specified, replace the turbocharger assembly.

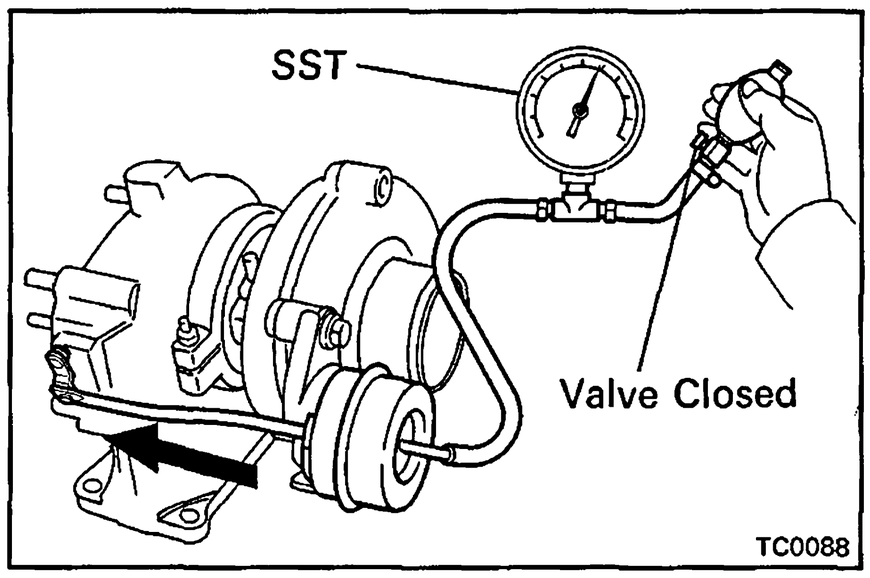

4. INSPECT ACTUATOR OPERATION

(a) Disconnect the actuator hose.

(b) Using SST (turbocharger pressure gauge), apply approx. 0.92 kg/cm^2 (13.1 psi, 90 kpa) of pressure to the actuator and check that the rod moves.

SST 09992-00241

If the rod does not move, replace the turbocharger assembly.

NOTICE: Never apply more than 1.05 kg/cm^2 (14.9 psi, 103 kPa) of pressure to the actuator.

INSTALLATION OF TURBOCHARGER

(See page TC-9)

NOTICE: After replacing the turbocharger assembly, pour approx. 20 cc (1.2 cu in.) of new oil into the oil inlet and turn the impeller wheel by hand to splash oil on the bearing.

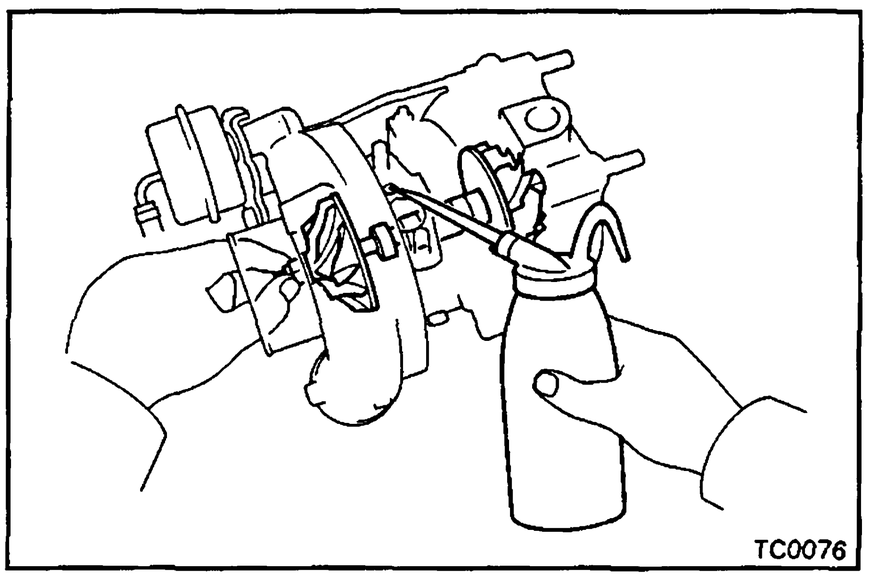

1. INSTALL TURBINE OUTLET ELBOW

Install a new gasket and the turbine outlet elbow with the four nuts.

Torque: 530 kg-cm (38 ft-lb, 52 N·m)

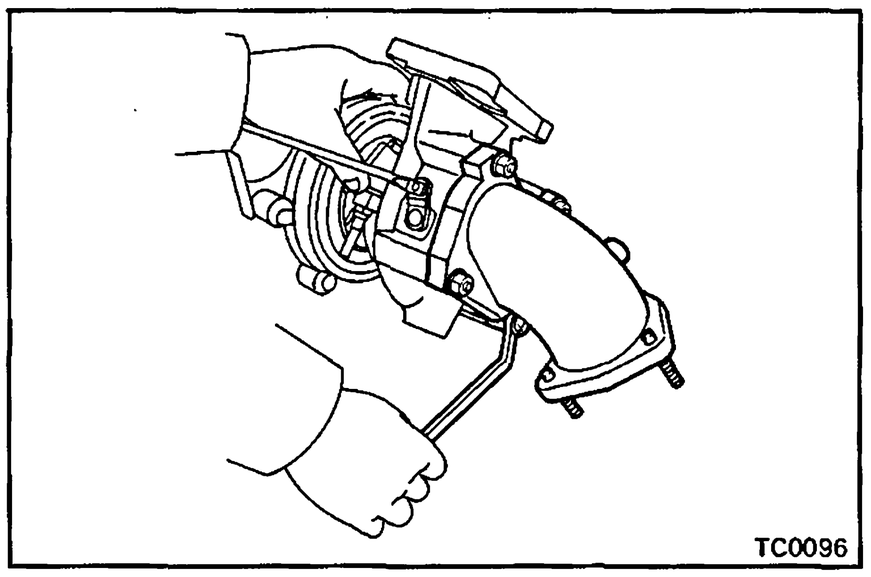

2. INSTALL NO.1 TURBO WATER PIPE

Install a new gasket and the water pipe with the two nuts.

Torque: 80 kg-cm (69 in.-lb, 7.8 N·m)

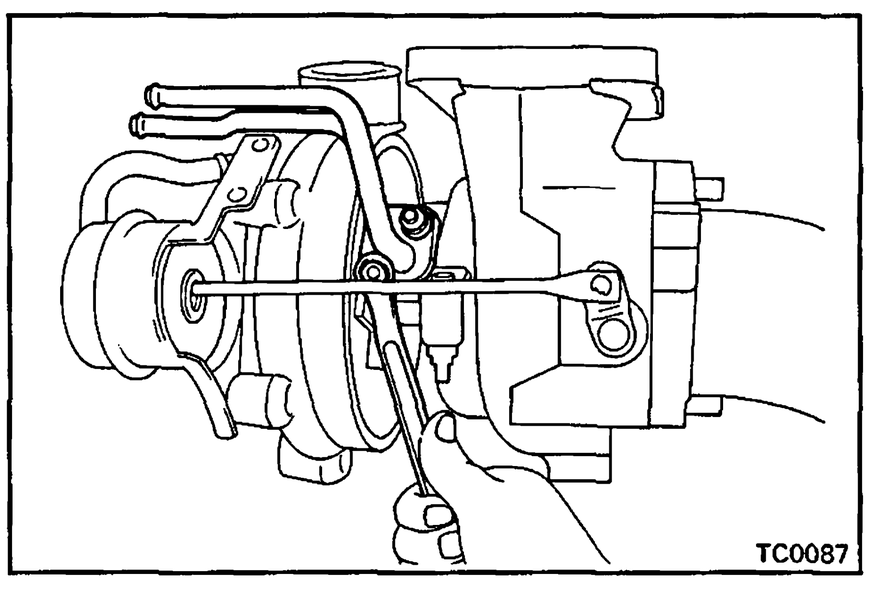

3. INSTALL NO.2 TURBO HEAT INSULATOR

Install the No.2 turbo heat insulator with the two bolts.

Torque: 80 kg-cm (69 in.-lb, 7.8 N·m)

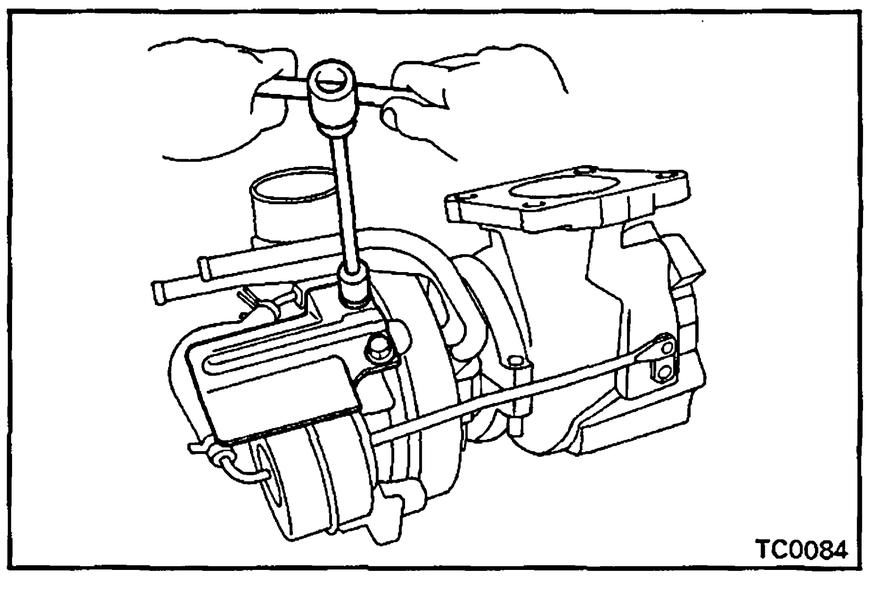

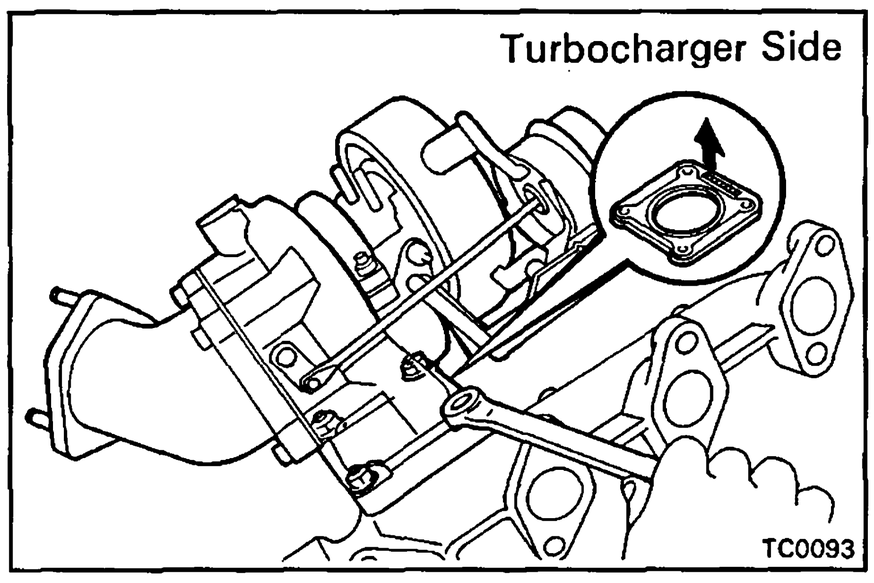

4. ASSEMBLE TURBOCHARGER AND EXHAUST MANIFOLD

Install a new gasket and the turbocharger to the exhaust manifold with the four nuts.

Torque: 530 kg-cm (38 ft-lb, 52 N·m)

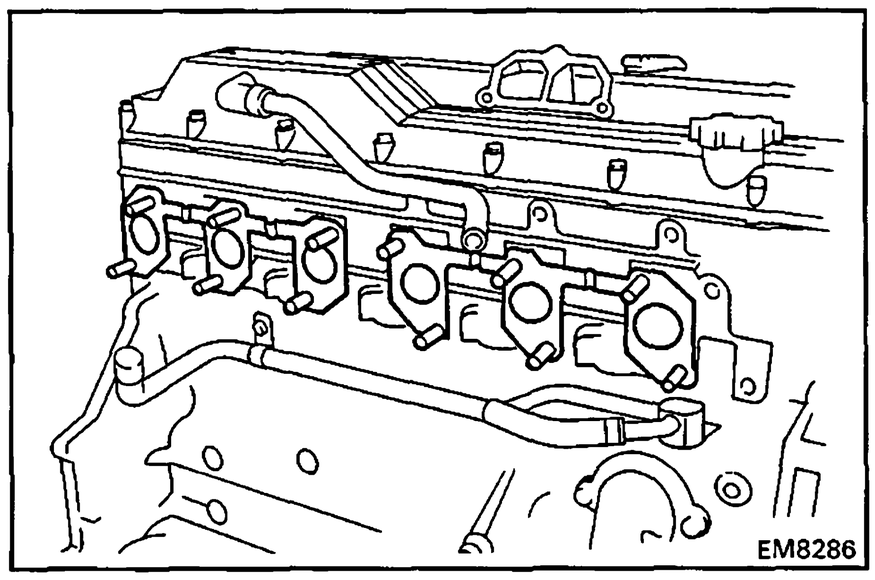

5. INSTALL TURBOCHARGER AND EXHAUST MANIFOLD ASSEMBLY

(a) Install two new gaskets to the cylinder head.

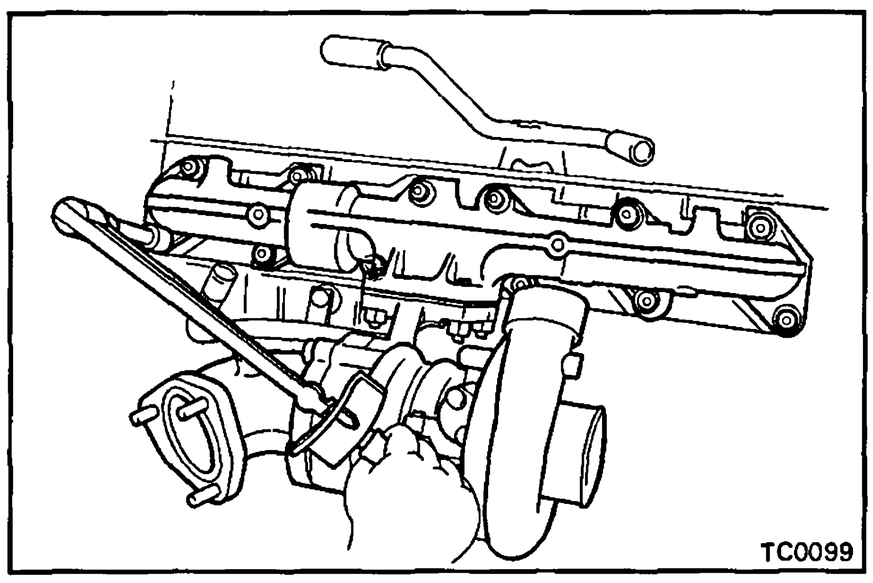

(b) Install the turbocharger and exhaust manifold assembly with the twelve nuts.

Torque: 400 kg-cm (29 ft-lb, 39 N·m)

HINT: Apply 330 kg-cm (24 ft-lb, 32 N·m) of torque when performing additional tightening of loosed nuts.

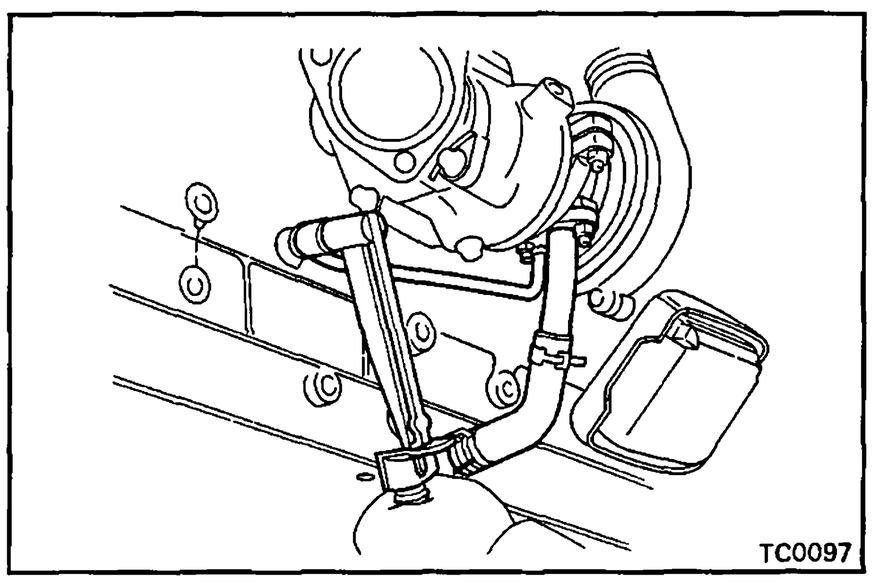

6. INSTALL TURBO OIL PIPE

(a) Install a new gasket and the turbo oil pipe with the two nuts.

Torque: 185 kg-cm (13 ft-lb, 18 N·m)

(b) Connect the turbo oil hose.

(c) Install two new gaskets and the union bolt of the turbo oil pipe.

Torque: 250 kg-cm (18 ft-lb, 25 N·m)

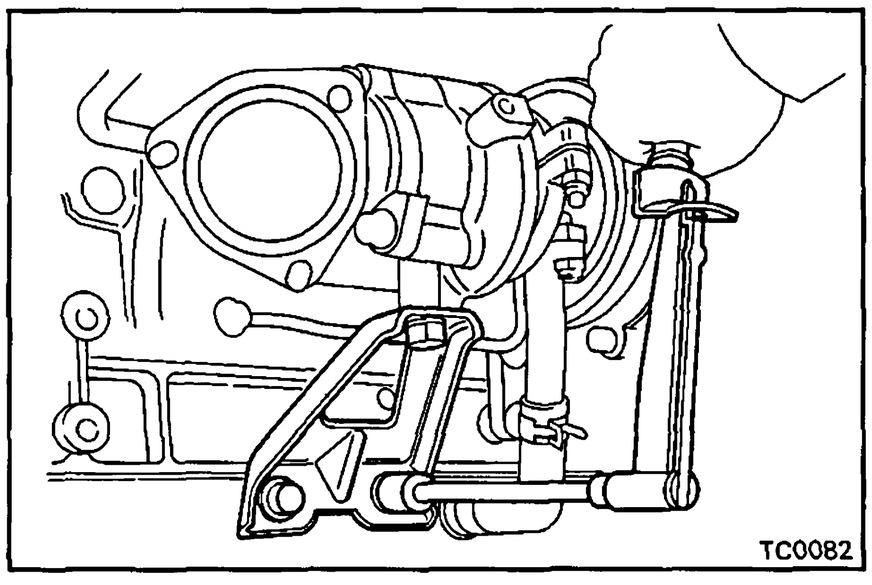

7. INSTALL TURBOCHARGER STAY

Install the turbocharger stay with the three bolts.

Torque: 1,200 kg-cm (87 ft-lb, 118 N·m)

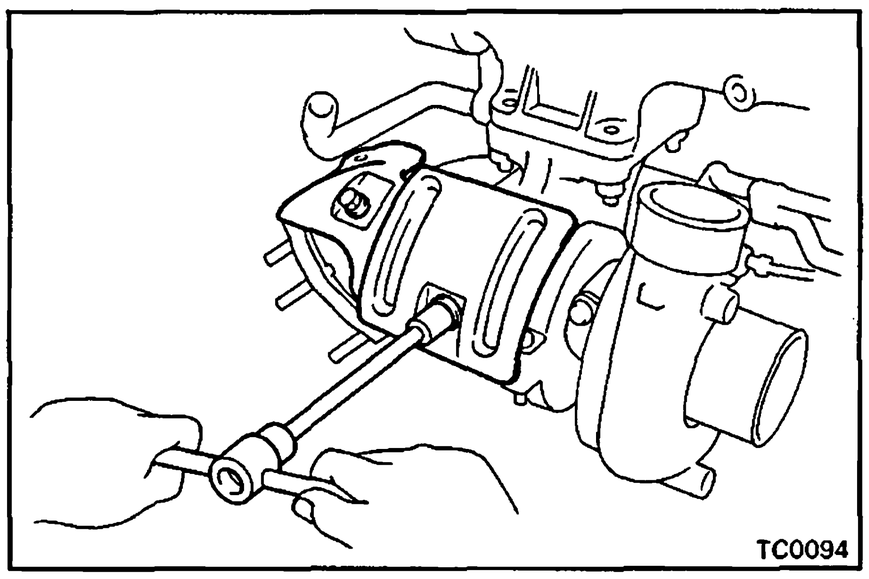

8. INSTALL TURBOCHARGER HEAT INSULATOR

Install the heat insulator with the two bolts.

Torque: 185 kg-cm (13 ft-lb, 18 N·m)

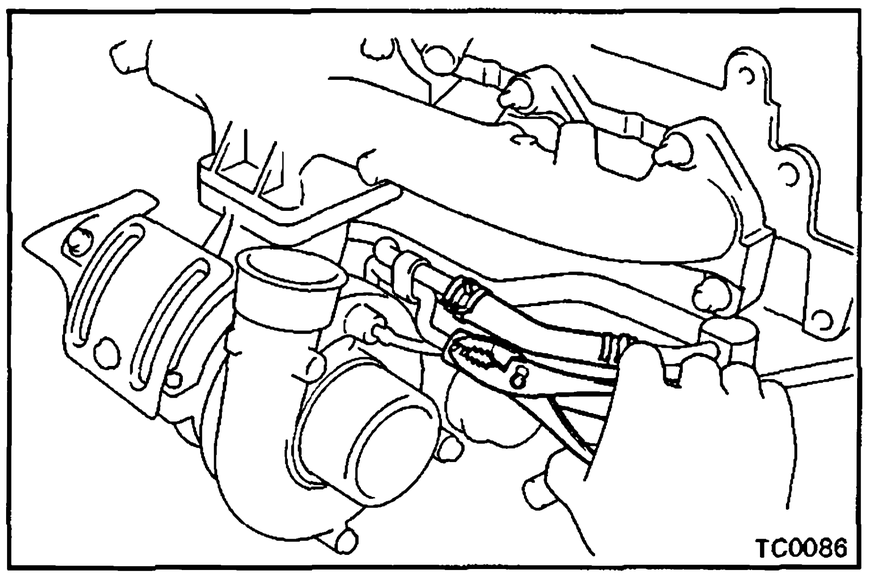

9. CONNECT WATER BY-PASS HOSES

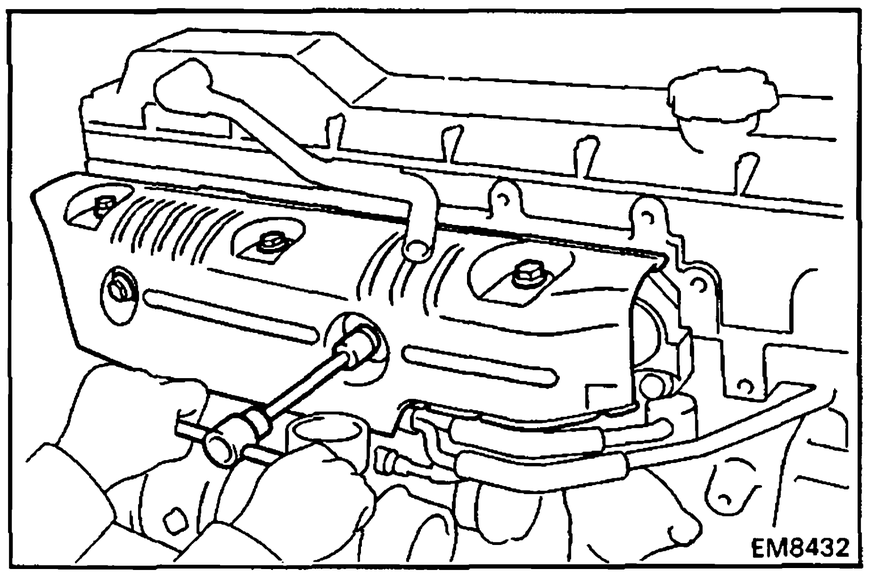

10. INSTALL EXHAUST MANIFOLD HEAT INSULATOR

Install the heat insulator with the five bolts.

Torque: 185 kg-cm (13 ft-lb, 18 N·m)

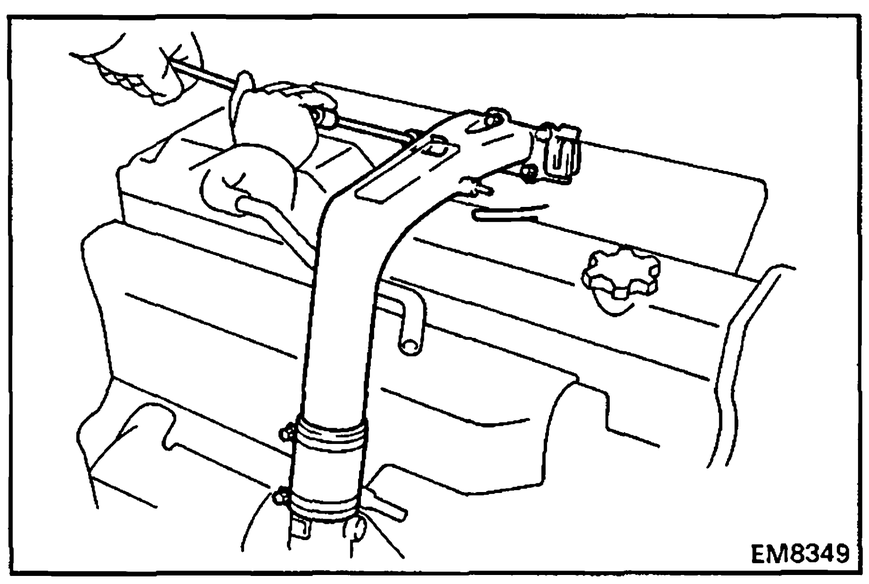

11. INSTALL INTAKE PIPE

(a) Connect the air hose and install a new gasket and the intake pipe with the three bolts.

Torque: 200 kg-cm (14 ft-lb, 20 N·m)

(b) Connect boost compensator vacuum hose.

12. FILL ENGINE WITH COOLANT (See page CO-5)

13. START ENGINE AND CHECK FOR LEAKS

14. CHECK ENGINE OIL LEVEL

FUEL SYSTEM

NOTE: For troubleshooting procedures, refer to TROUBLE-SHOOTING (EM Section).

	Page
DESCRIPTION	FU-2
REPLACEMENT OF FUEL FILTER	FU-4
FUEL HEATER SYSTEM	FU-6
INJECTION NOZZLES (1PZ and 1HZ)	FU-9
INJECTION NOZZLES (1HD-T)	FU-16
INJECTION PUMP	FU-27
POWER CONTROL SYSTEM (PCS) (HDB30 (w/ M/T) only)	FU-95

DESCRIPTION

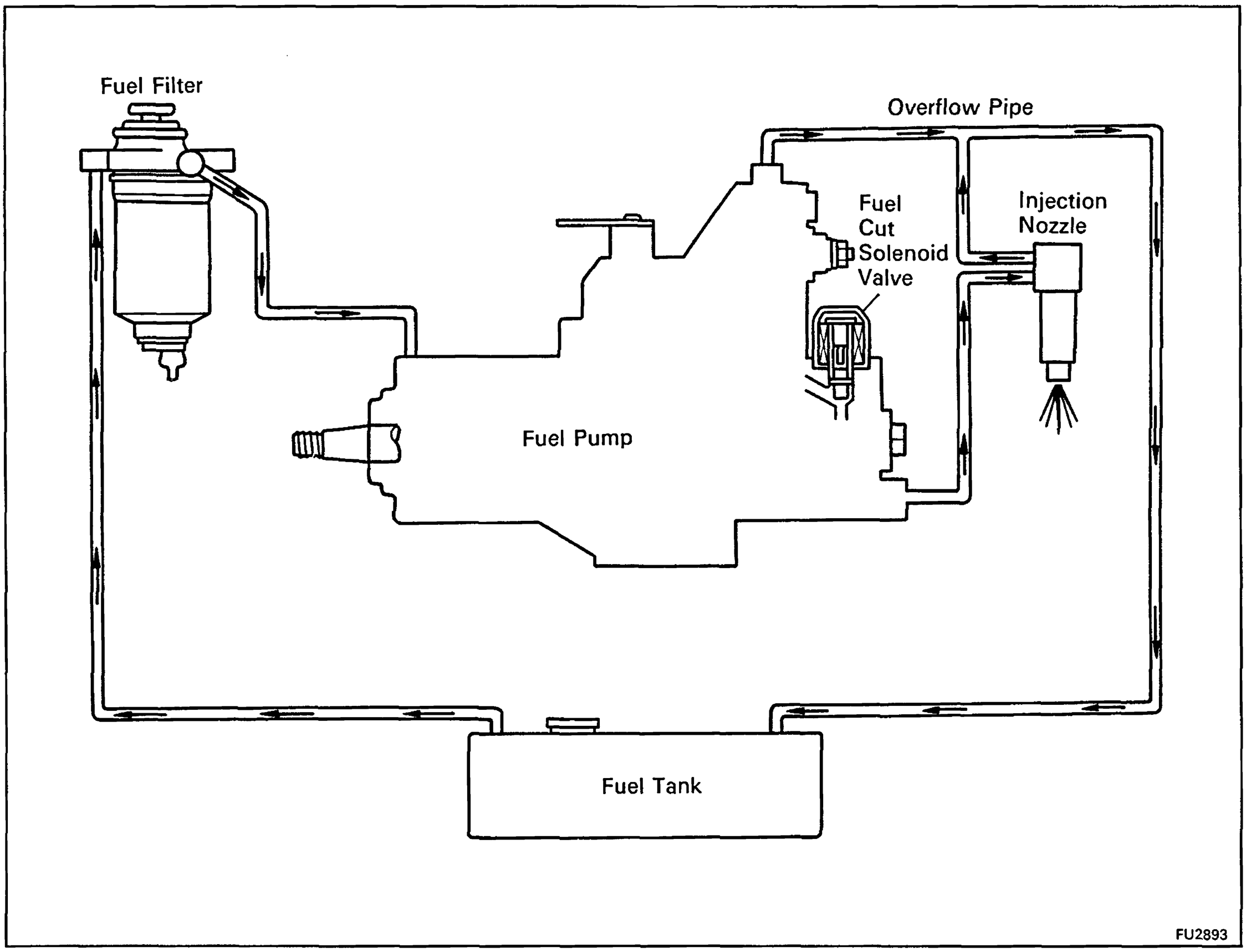

FUEL SYSTEM

Fuel is drawn up from the fuel tank through the fuel filter (sedimenter) by the feed pump built into the injection pump. The fuel drawn up is then sent into the pump housing. Fuel compressed in the pump housing is distributed to the injection nozzles according to the injection order, and injected at high pressure into the combustion chamber. Excess fuel in the pump housing flows through the overflow valve and along the overflow pipe and returns to the fuel tank. The fuel cycle provides both cooling and lubrication for the pump. The cycling of fuel through the pump chamber warms the fuel so that it is prevented from becoming wax-like at cold temperatures.

Injection Pump (VE Pump)

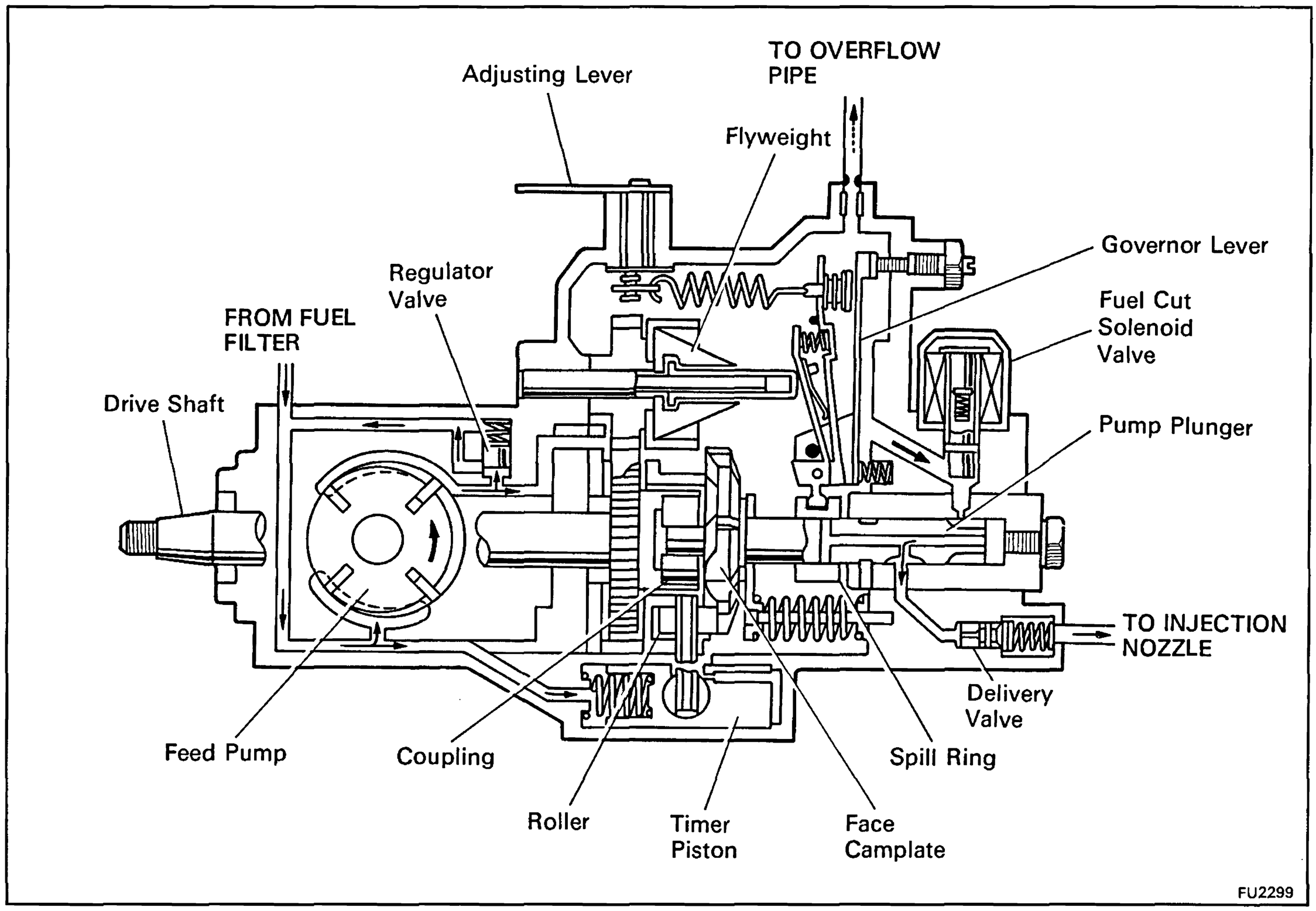

OPERATION

- The centrifugal force type feed pump takes up a fixed volume of fuel with each turn. The fuel expulsion pressure from the feed pump is controlled by operation of the pressure regulator valve.
- Fuel is sent from the outlet side of the feed pump, through the hole in the upper part of the feed pump cover and into the pump body.
- The pump plunger also rotates as it moves up and down. After the fuel is drawn in, it is distributed under pressure to the delivery valve of each cylinder according to the injection order.
- The centrifugal force type all speed governor installed in the upper part of the injection pump moves the spill ring obstructing the plunger spill port and controls the fuel injection volume.
- The hydraulic type timer installed in the lower part of the injection pump is operated by the fuel pressure of the pump housing, and movement of the roller ring by the timer advances the injection angle and controls the injection timing.
- The fuel cut solenoid valve is connected to the starter switch IG circuit, and when the starter switch is turned to OFF, the current is cut off, the solenoid is de-energized, fuel is cut off and the engine stops.
- High Altitude Compensation (HAC) Device
  Due to the decrease in atmospheric pressure at high altitudes, the air fuel ratio becomes more dense and the smoke density increases. To prevent this, the device automatically reduces the fuel injection volume for full loads in response to the altitude.
- Boost Compensator with turbocharger
  The boost compensator is installed on the upper part of the governor of the injection pump. Turbocharged air pressure moves the diaphragm and push rod up and down, this movement is conveyed to the spill ring and the fuel injection volume increases according to the degree of movement.

REPLACEMENT OF FUEL FILTER

1. **DISCONNECT FUEL FILTER WARNING SWITCH CONNECTOR**

2. **DRAIN FUEL FROM FUEL FILTER**

   (a) Connect a vinyl hose to the drain cock, and insert the other end of the vinyl hose in a container.

   (b) Loosen the drain plug, and drain the fuel.

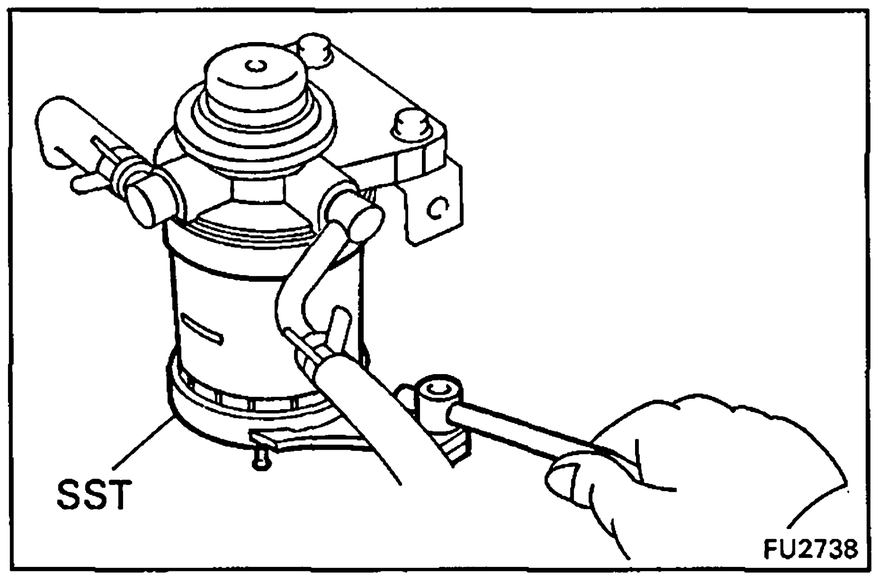

3. **REPLACE FUEL FILTER**

A. **Remove fuel filter**

Using SST, remove the fuel filter.

SST 09228-64010

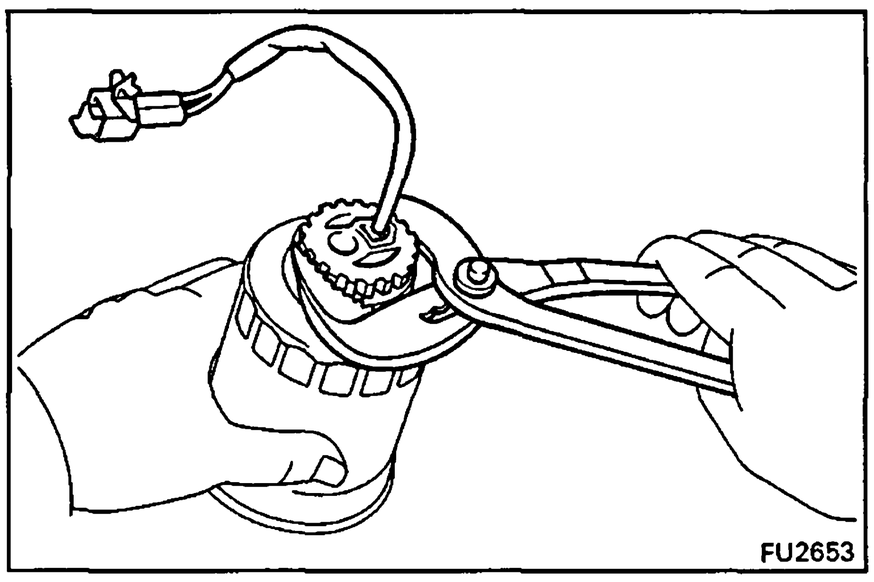

B. **Remove fuel filter warning switch from fuel filter**

Using pliers, remove the warning switch and O-ring.

NOTICE: Be careful not to damage the warning switch.

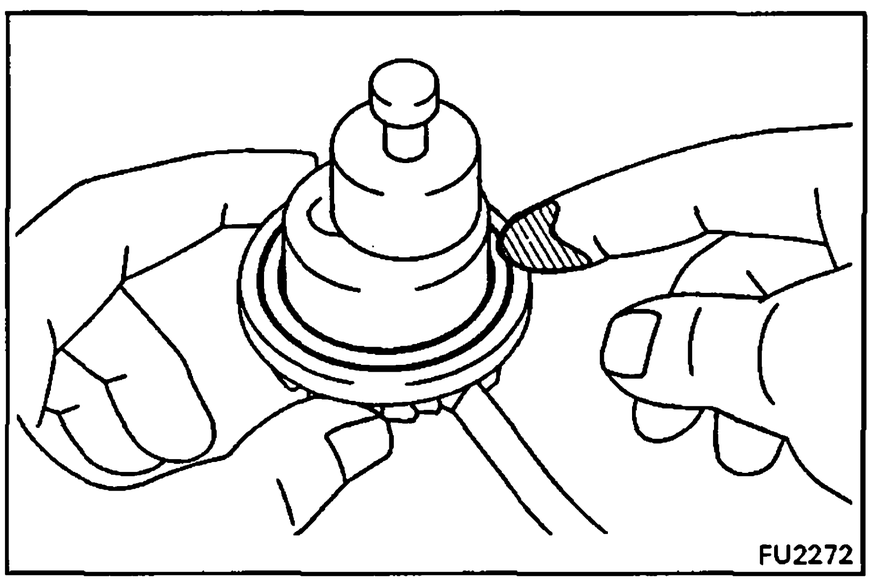

C. **Install fuel filter warning switch to new fuel filter**

   (a) Install a new O-ring to the warning switch.

   (b) Apply fuel to the O-ring of the warning switch.

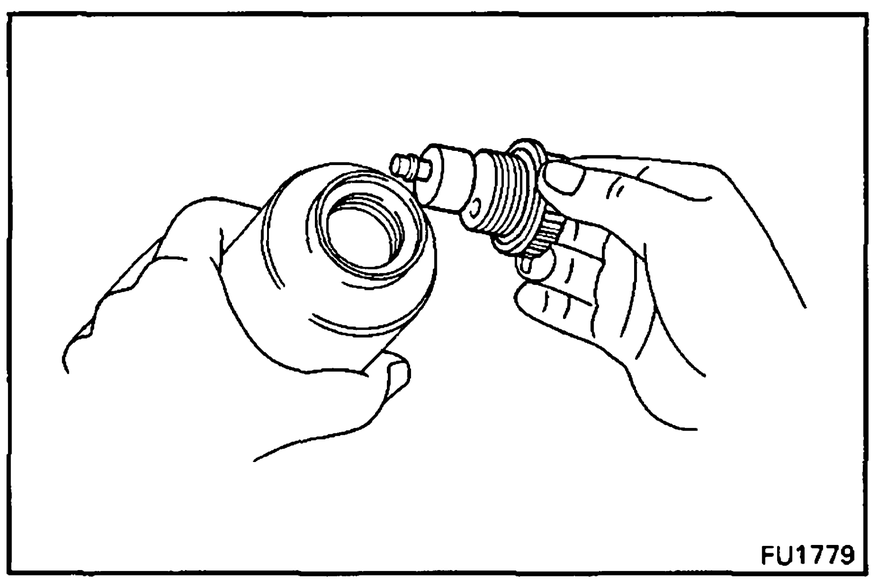

   (c) Install the warning switch to a new fuel filter by hand.

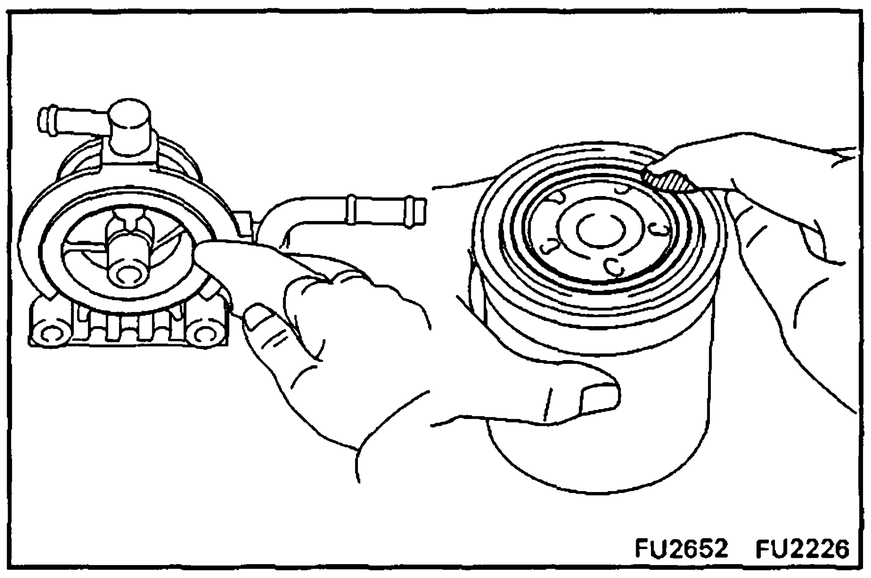

D. Install new fuel filter

(a) Check and clean the fuel filter installation surface.

(b) Apply fuel to the gasket of a new fuel filter.

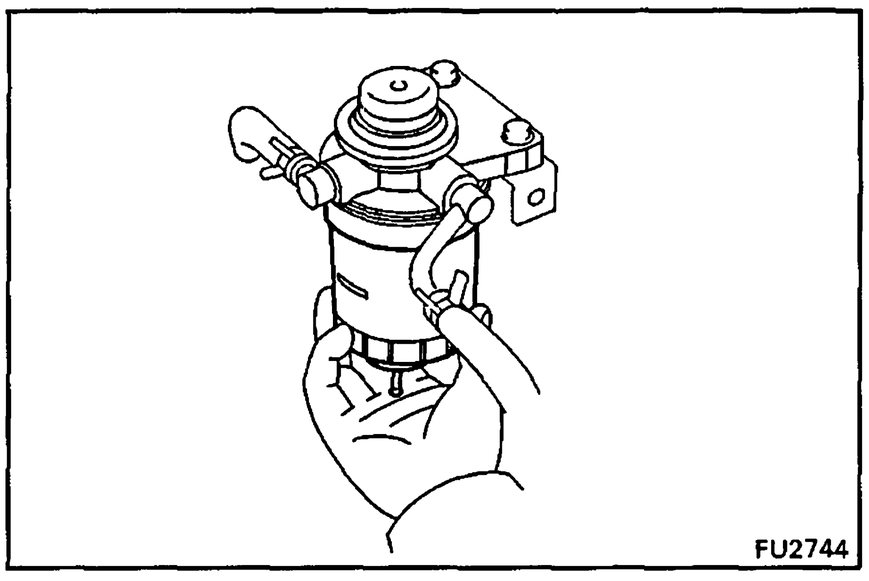

(c) Lightly screw the fuel filter into place, and tighten it until the gasket comes into contact with the seat.

(d) Tighten it additional 3/4 turn by hand.

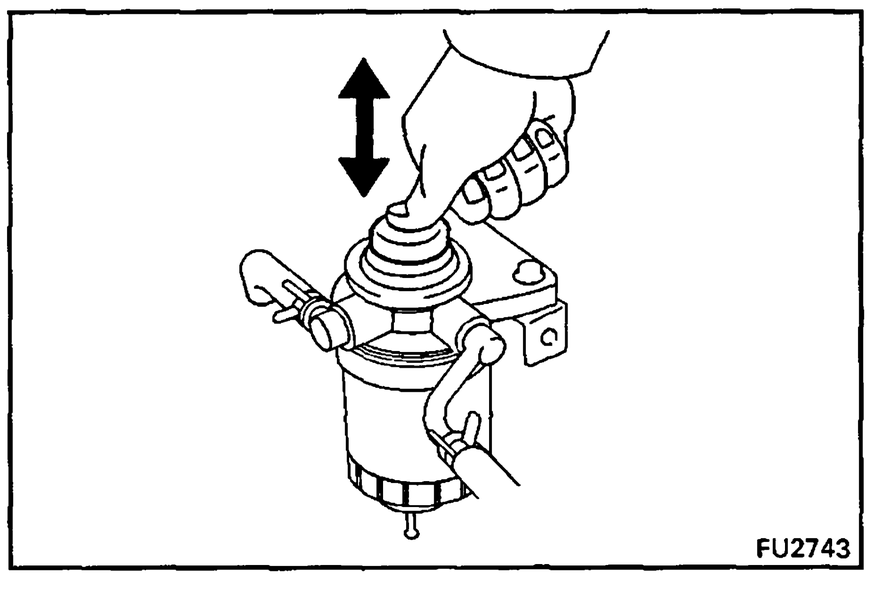

4. FILL FUEL FILTER WITH FUEL

Operate the hand pump until you feel more resistance.

5. CONNECT FUEL FILTER WARNING SWITCH CONNECTOR

6. START ENGINE AND CHECK FOR FUEL LEAKS

FUEL HEATER SYSTEM

SYSTEM CIRCUIT

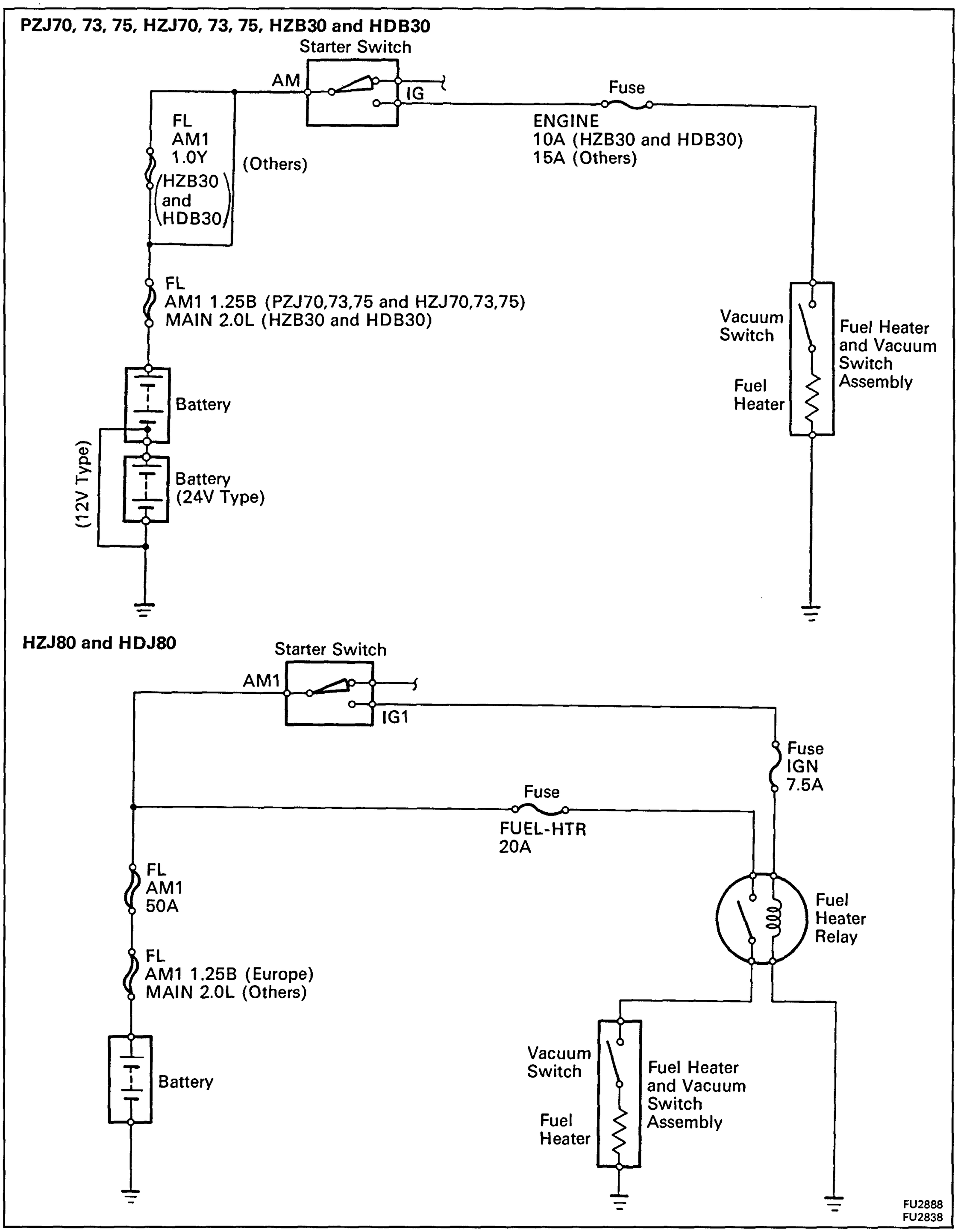

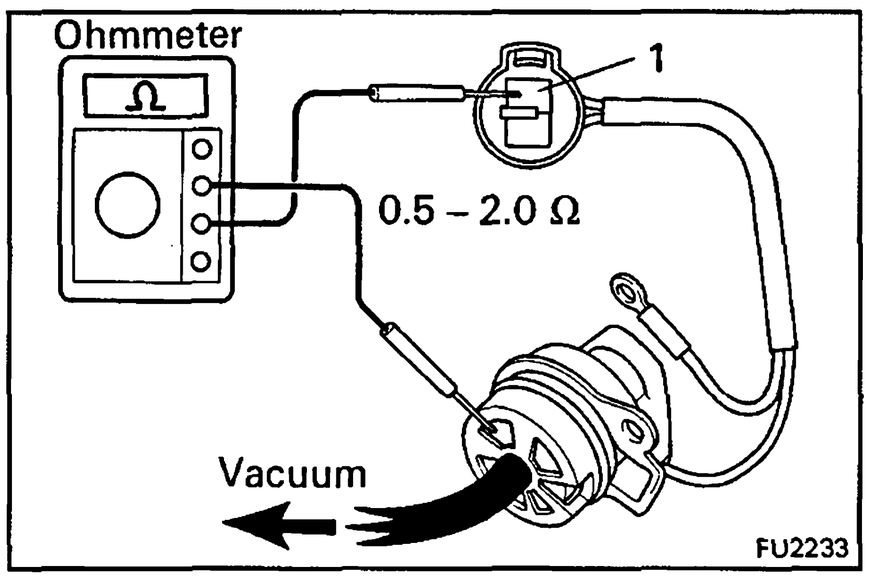

INSPECTION OF COMPONENTS

Fuel Heater

INSPECT FUEL HEATER

(a) Apply a vacuum of 350 ± 50 mmHg (13.78 ± 1.97 in.Hg, 46.7 ± 6.7 kPa) or more to the vacuum switch port.

(b) Using an ohmmeter, measure the resistance between terminal 1 and the switch body.

Resistance: 0.5 – 2.0 Ω at 20°C (68°F)

If the resistance is not as specified, replace the fuel heater and vacuum switch assembly.

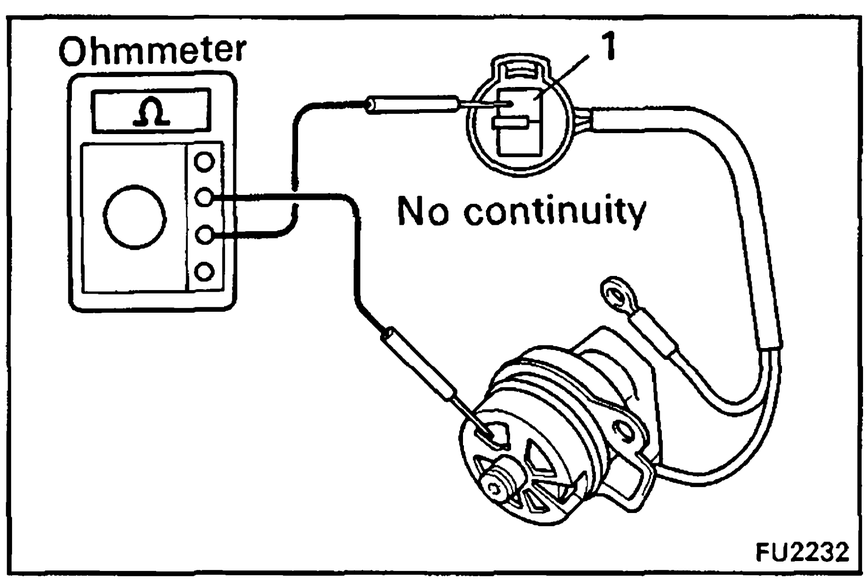

Vacuum Switch

1. INSPECT SWITCH CONTINUITY

Using an ohmmeter, check that there is no continuity between terminal 1 and the switch body.

If continuity is not as specified, replace the fuel heater and vacuum switch assembly.

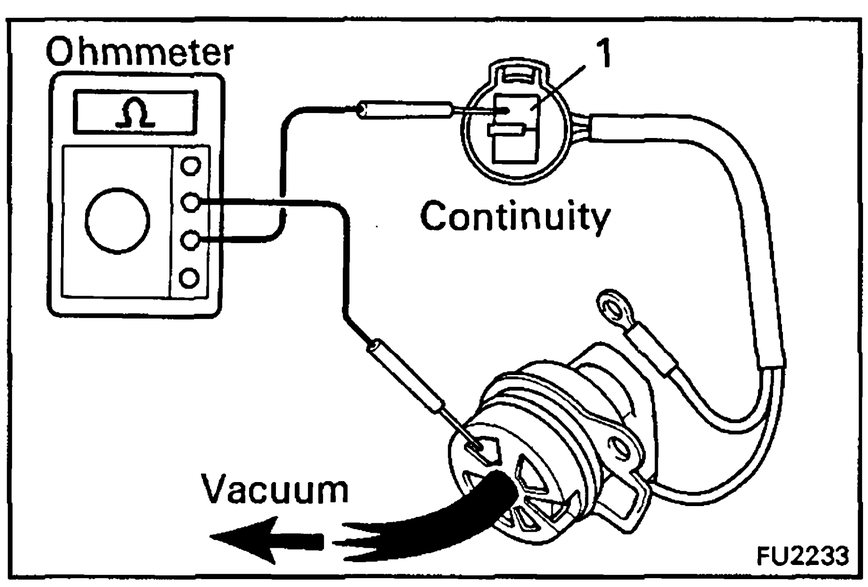

2. INSPECT SWITCH OPERATION

(a) Apply a vacuum of 350 ± 50 mmHg (13.78 ± 1.97 in.Hg, 46.7 ± 86.7 kPa) or more to the vacuum switch port.

(b) Using an ohmmeter, check that there is continuity between terminal 1 and the switch body.

If operation is not as specified, replace the fuel heater and vacuum switch assembly.

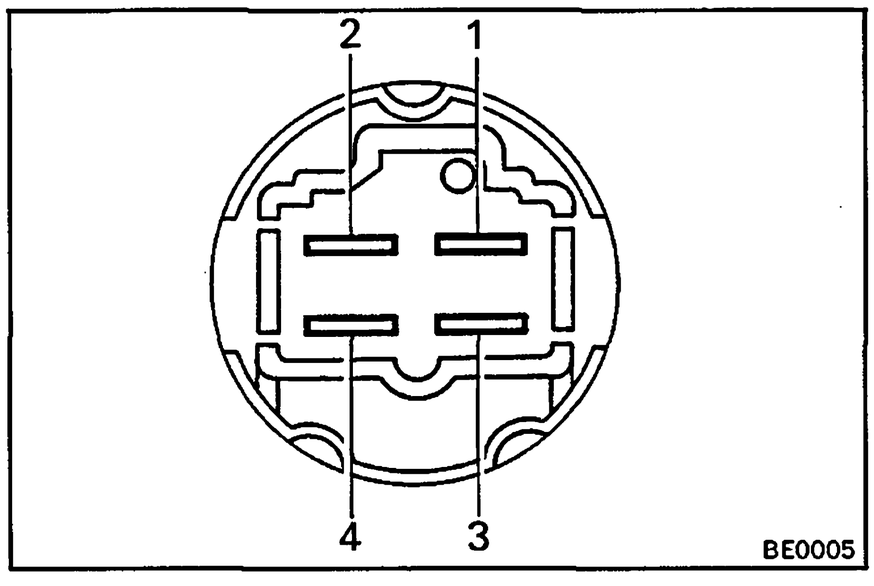

Fuel Heater Relay (HZJ80 and HDJ80 only)

LOCATION: In the engine compartment relay box.

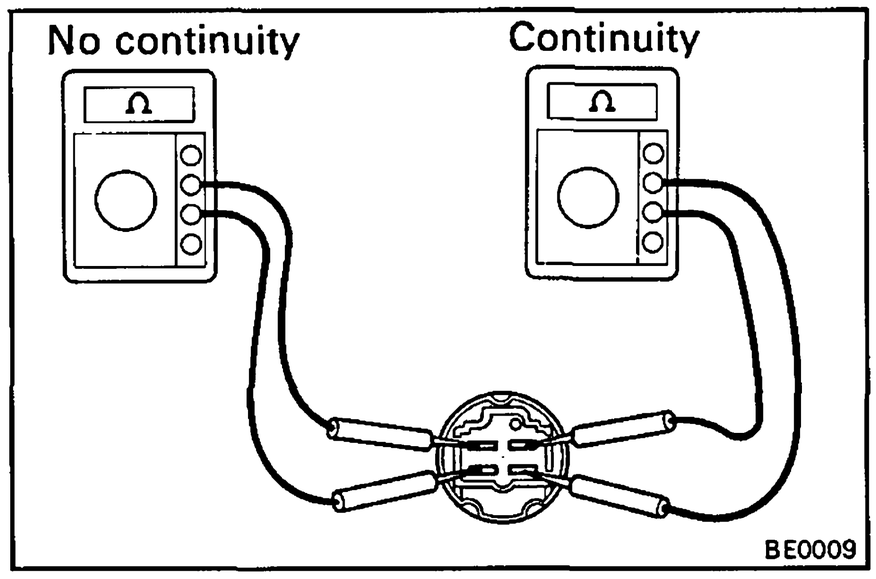

1. **INSPECT RELAY CONTINUITY**
   (a) Using an ohmmeter, check that there is continuity between terminals 1 and 3.
   (c) Check that there is no continuity between terminals 2 and 4.

   If continuity is not as specified, replace the relay.

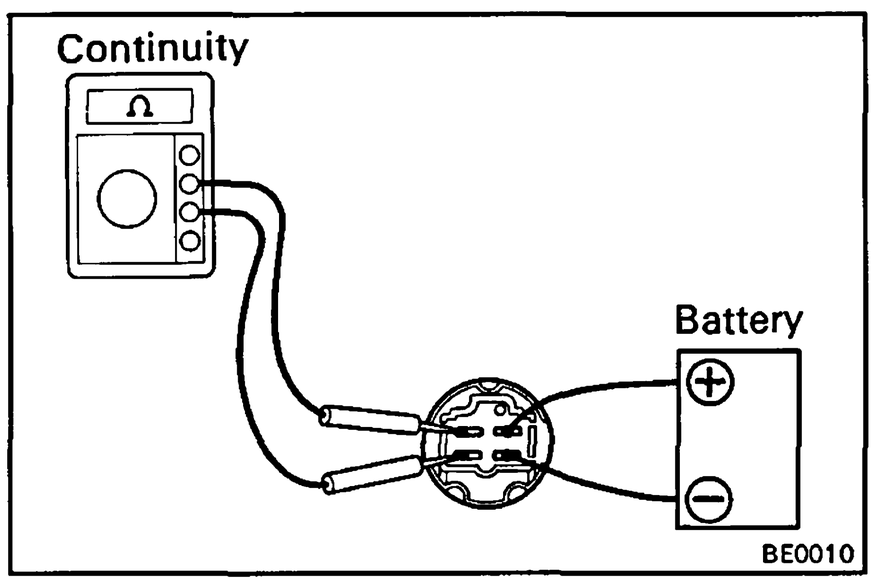

2. **INSPECT RELAY OPERATION**
   (b) Apply battery voltage across terminals 1 and 3.
   (c) Using an ohmmeter, check that there is continuity between terminals 2 and 4.

   If operation is not as specified, replace the relay.

INJECTION NOZZLES (1PZ and 1HZ)

REMOVAL OF INJECTION NOZZLES

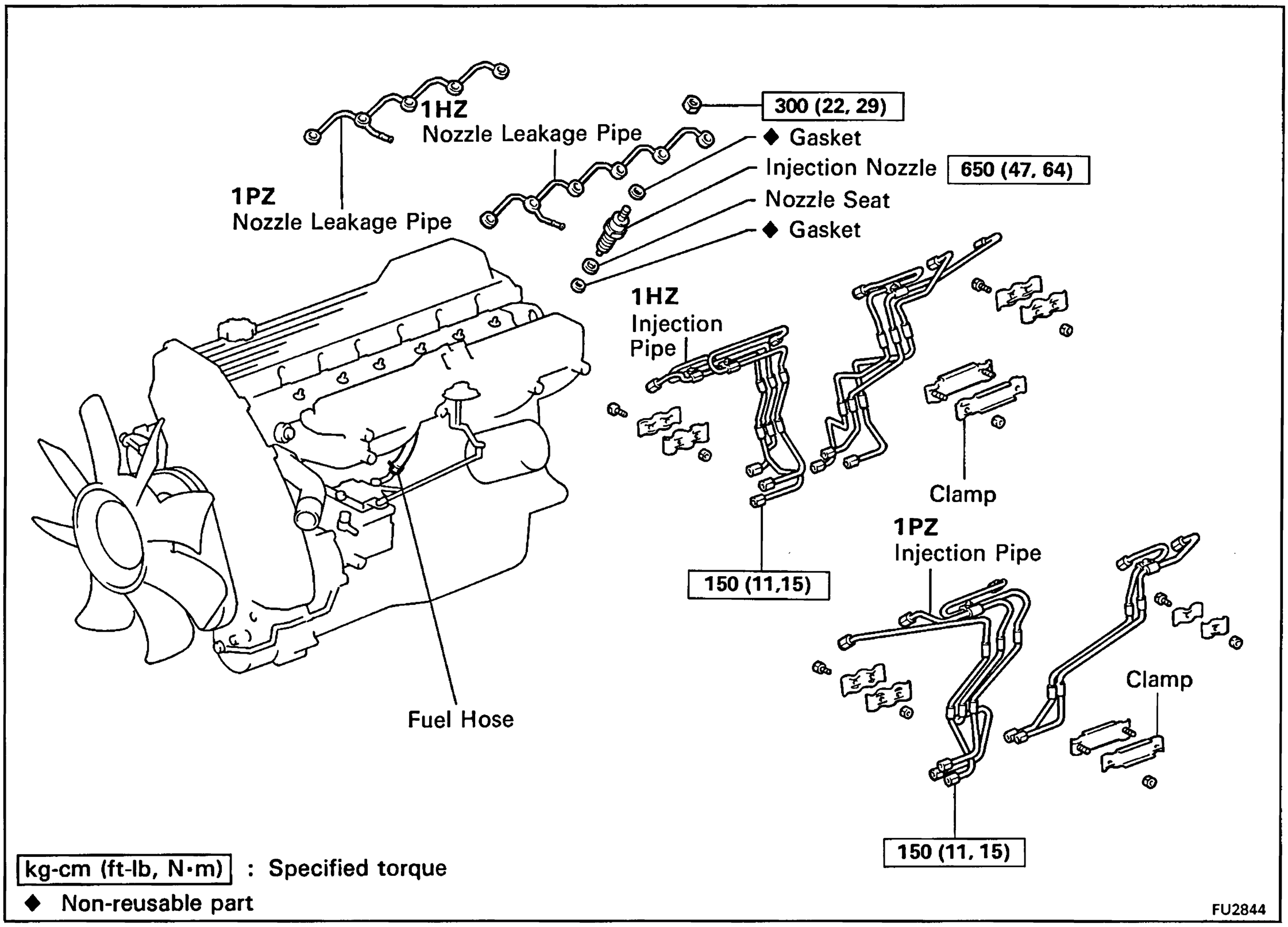

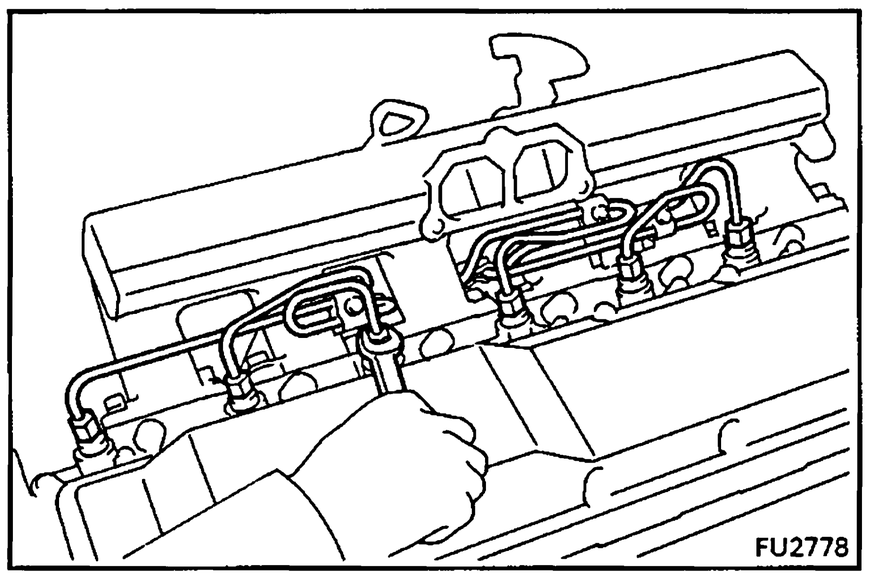

1. **REMOVE INTAKE PIPE**
   (See step 6 on page EM-34)

2. **REMOVE INJECTION PIPES**
   (a) Loosen the union nuts of the injection pipes from the injection nozzles.

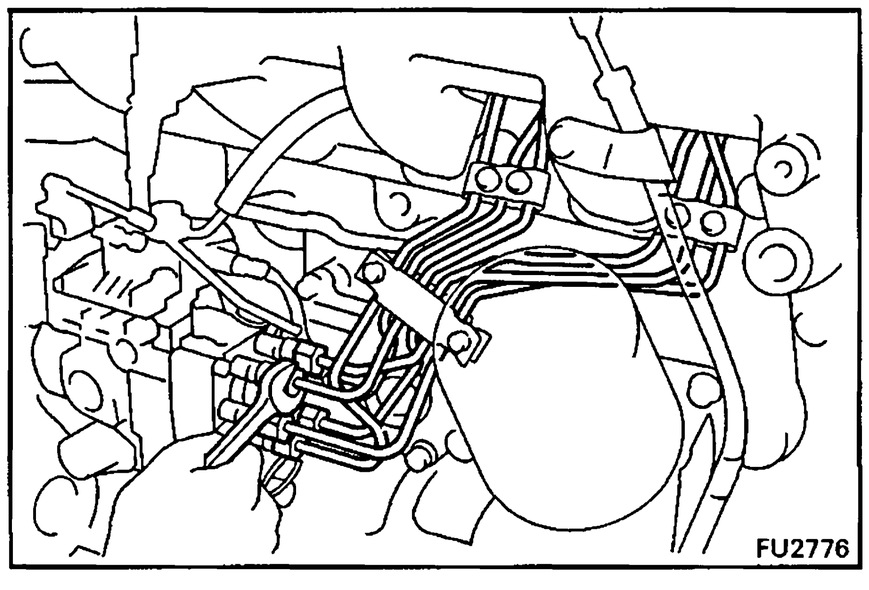

   (b) Loosen the union nuts of the injection pipes from the injection pump.
   (c) Remove the three clamps and injection pipes.

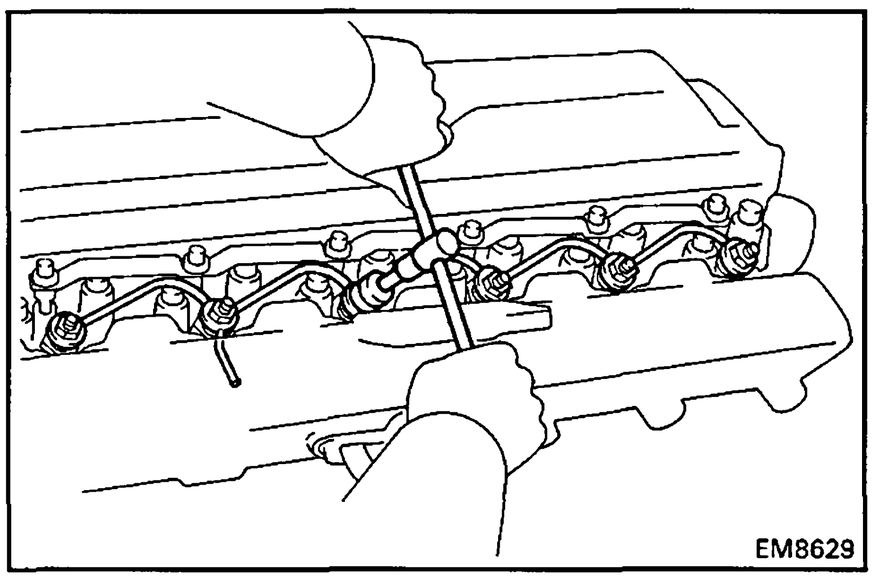

3. REMOVE NOZZLE LEAKAGE PIPE

(a) Disconnect the fuel hose from the nozzle leakage pipe.

(b) Remove the nuts, leakage pipe and gaskets.

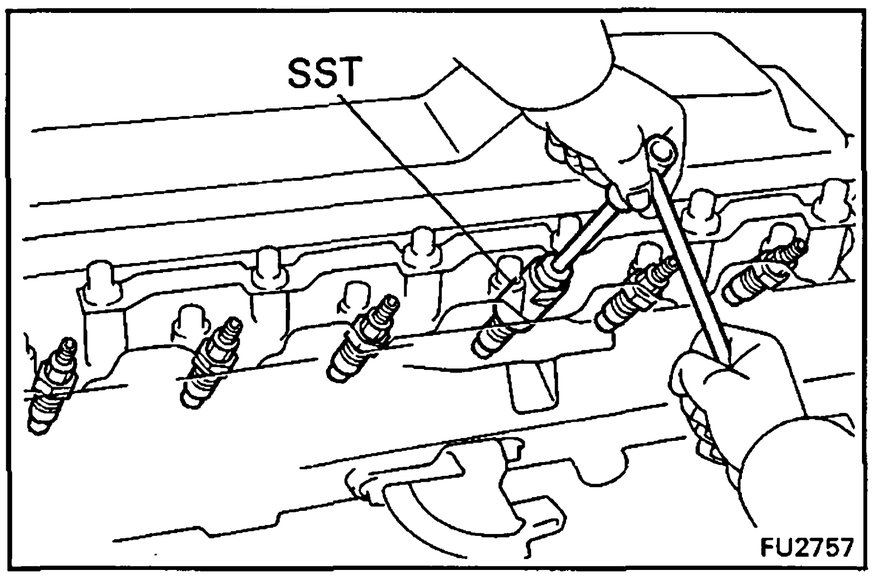

4. REMOVE INJECTION NOZZLES

Using SST, remove the injection nozzles, seats and gaskets.

SST 09268-64010

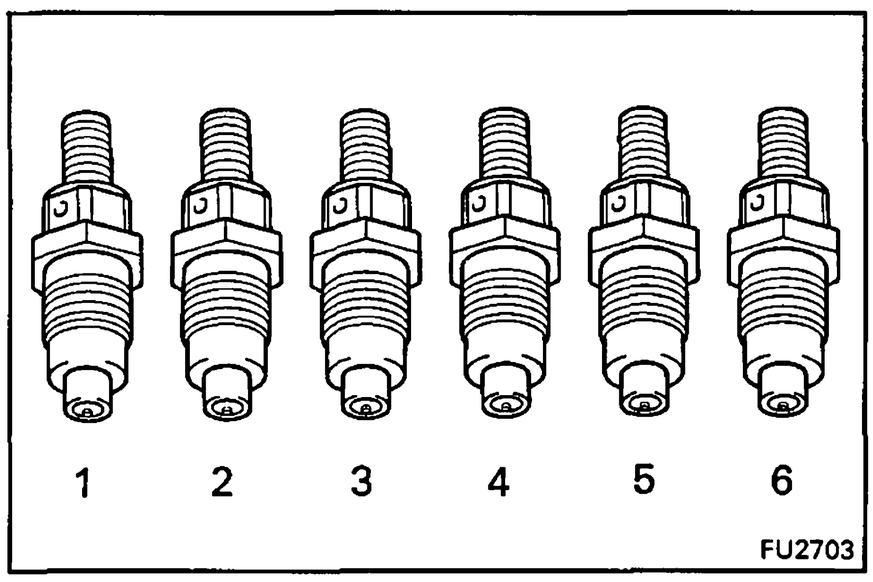

HINT: Arrange the injection nozzles in correct order.

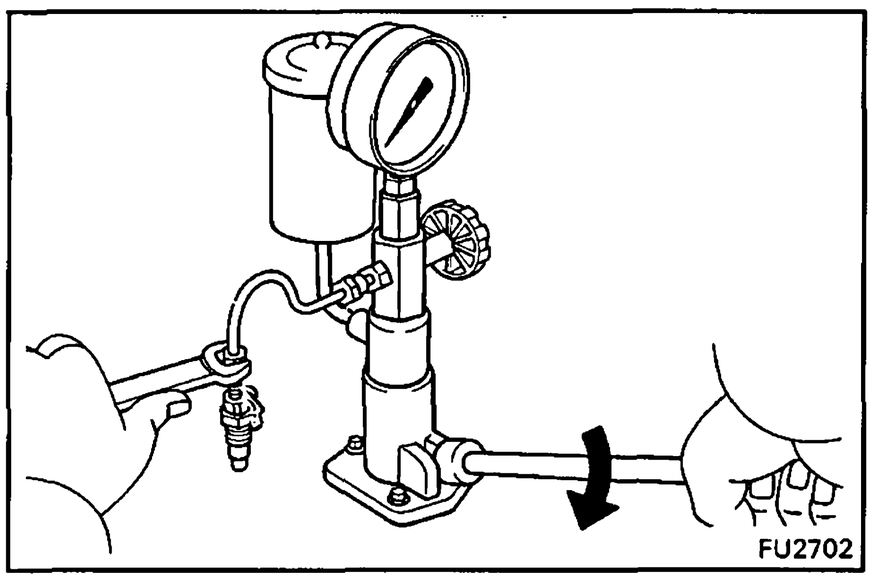

TEST OF INJECTION NOZZLES

1. INJECTION PRESSURE TEST

(a) Install the injection nozzle to the injection nozzle hand tester and bleed air from the union nut.

CAUTION: Do not place your finger over the nozzle injection hole.

(b) Pump the tester handle a few times as fast as possible to discharge the carbon from the injection hole.

(c) Pump the tester handle slowly and observe the pressure gauge.

(d) Read the pressure gauge just as the injection pressure begins to drop.

Opening pressure:

New nozzle	**145 – 155 kg/cm^2 (2,062 – 2,205 psi) (14,220 – 15,200 kPa)**
Reused nozzle	**135 – 155 kg/cm^2 (1,920 – 2,205 psi) (13,239 – 15,200 kPa)**

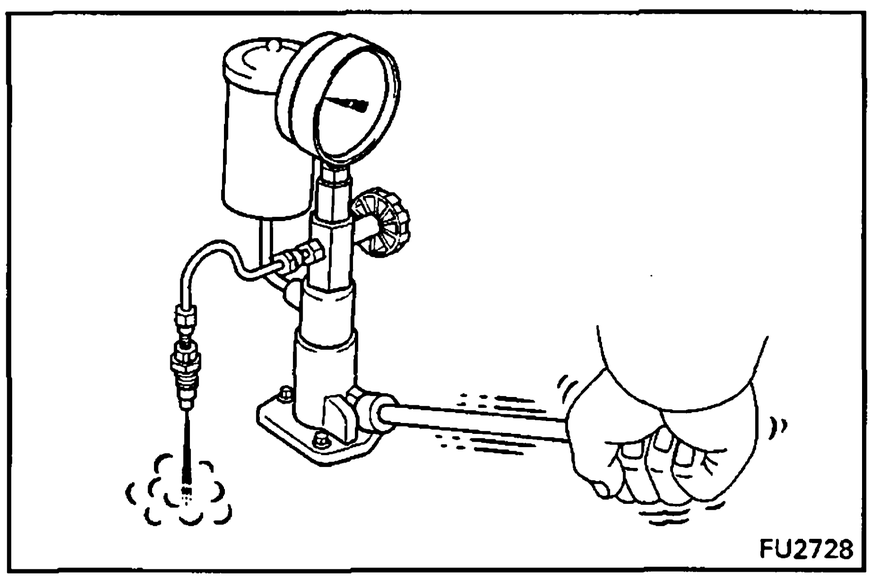

HINT: Proper nozzle operation can be determined by a swishing sound.

If the opening pressure is not as specified, disassemble he nozzle holder and change the adjusting shim on the top of the pressure spring. (See page FU-13).

Adjusted opening pressure: 135 – 155 kg/cm^2 (1,920 – 2.205 psi) (13,239 – 15,200 kPa)

Adjusting shim thickness mm (in.)		
0.900 (0.0354)	1.275 (0.0502)	1.650 (0.0650)
0.925 (0.0364)	1.300 (0.0512)	1.675 (0.0659)
0.950 (0.0374)	1.325 (0.0522)	1.700 (0.0669)
0.975 (0.0384)	1.350 (0.0531)	1.725 (0.0679)
1.000 (0.0394)	1.375 (0.0541)	1.750 (0.0689)
1.025 (0.0404)	1.400 (0.0551)	1.775 (0.0699)
1.050 (0.0413)	1.425 (0.0561)	1.800 (0.0709)
1.075 (0.0423)	1.450 (0.0571)	1.825 (0.0719)
1.100 (0.0433)	1.475 (0.0581)	1.850 (0.0728)
1.125 (0.0443)	1.500 (0.0591)	1.875 (0.0738)
1.150 (0.0453)	1.525 (0.0600)	1.900 (0.0748)
1.175 (0.0463)	1.550 (0.0610)	1.925 (0.0758)
1.200 (0.0472)	1.575 (0.0620)	1.950 (0.0768)
1.225 (0.0482)	1.600 (0.0630)	
1.250 (0.0492)	1.625 (0.0640)	

HINT:

- Varying the adjusting shim thickness by 0.025 mm (0.0010 in.) changes the injection pressure by about 4.5 kg/cm^2 (64 psi, 441 kPa) (1PZ).
- Varying the adjusting shim thickness by 0.025 mm (0.0010 in.) changes the injection pressure by about 3.5 kg/cm^2 (50 psi, 343 kPa) (1HZ).
- Only one adjusting shim should be used.

(f) There should be no dripping after injection.

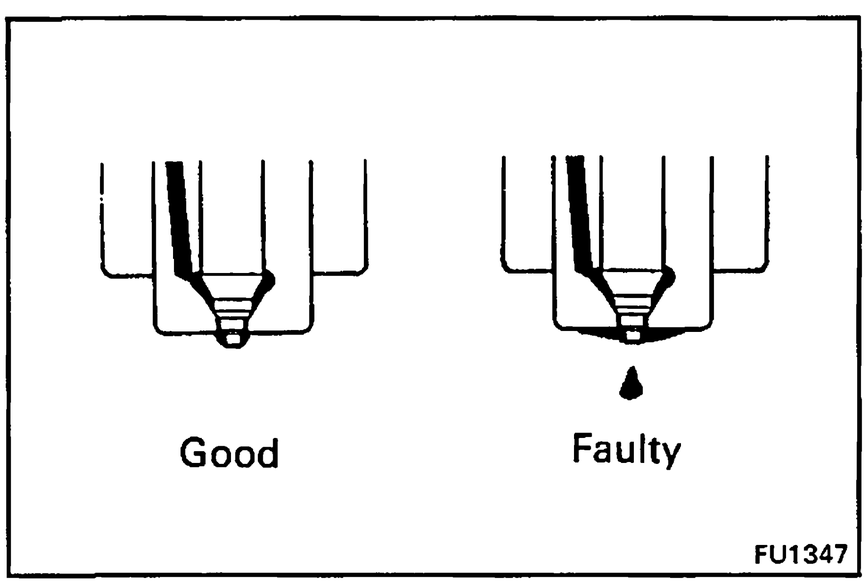

2. LEAKAGE TEST

While maintaining pressure at about 10 – 20 kg/cm^2 (142 – 284 psi, 981 – 1,961 kPa) below opening pressure (adjust by tester handle), check that there is no dripping for 10 seconds from the injection hole or around the retaining nut.

If the nozzle drips within 10 seconds, replace or clean and overhaul the nozzle assembly.

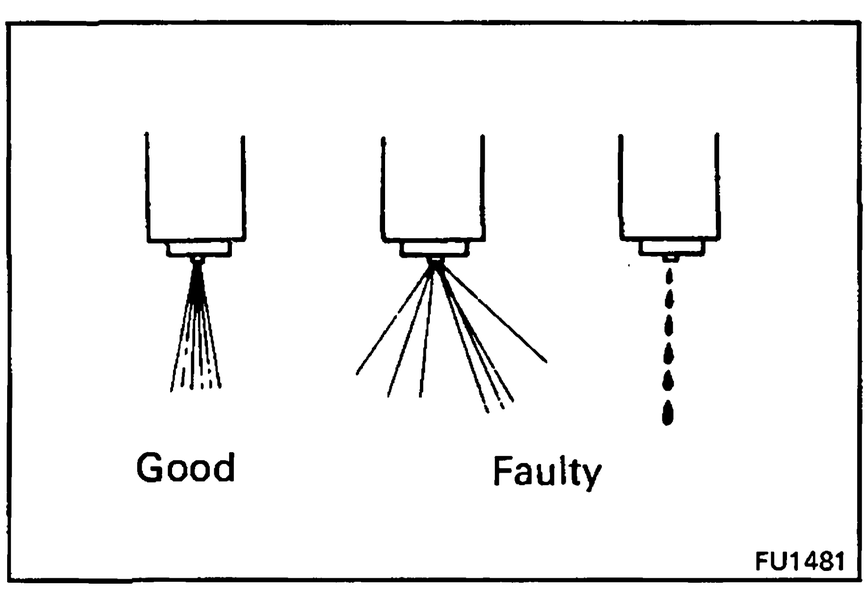

3. SPRAY PATTERN TEST

(a) The injection nozzle should shudder at a certain pumping speed between 15 – 60 times (old nozzle) or 30 – 60 times (new nozzle) per minute.

(b) Check the spray pattern during shuddering.

If the spray pattern is not correct during shuddering, the nozzle must be replaced or cleaned.

COMPONENTS

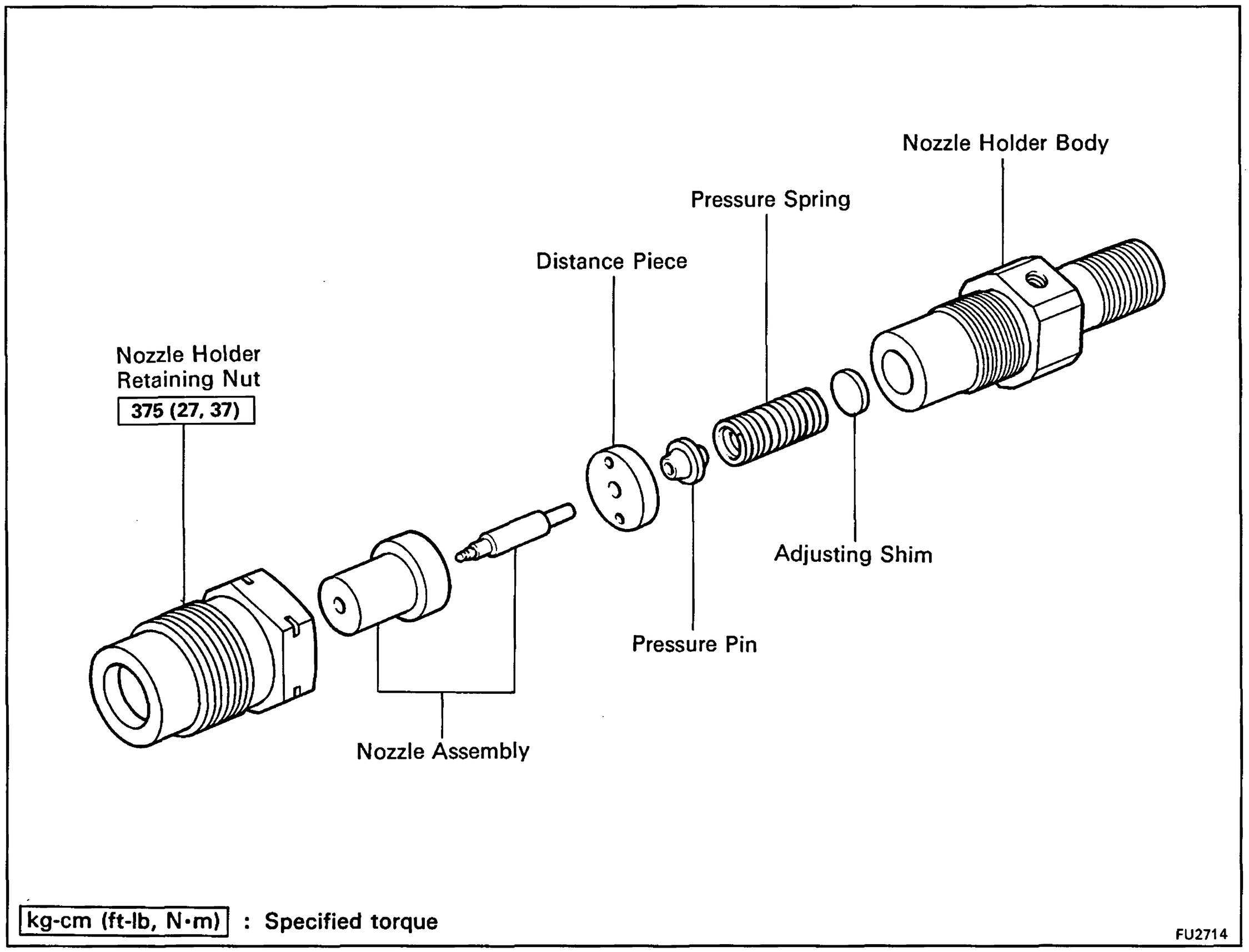

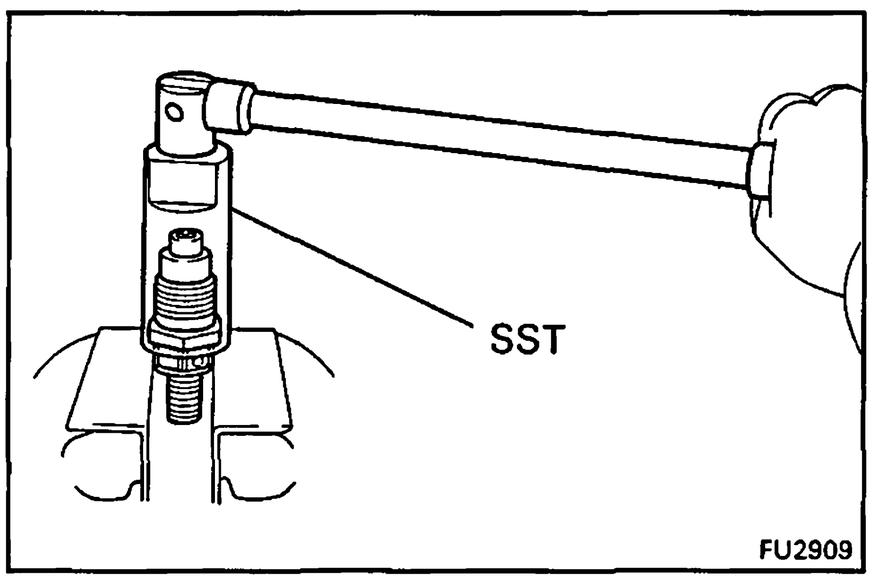

DISASSEMBLY OF INJECTION NOZZLES

DISASSEMBLE INJECTION NOZZLES

(a) Using SST, remove the nozzle holder retaining nut.

SST 09268-64010

NOTICE: When disassembling the nozzle, be careful not to drop the inner parts.

(b) Remove the pressure spring, shim, pressure pin, distance piece and the nozzle assembly.

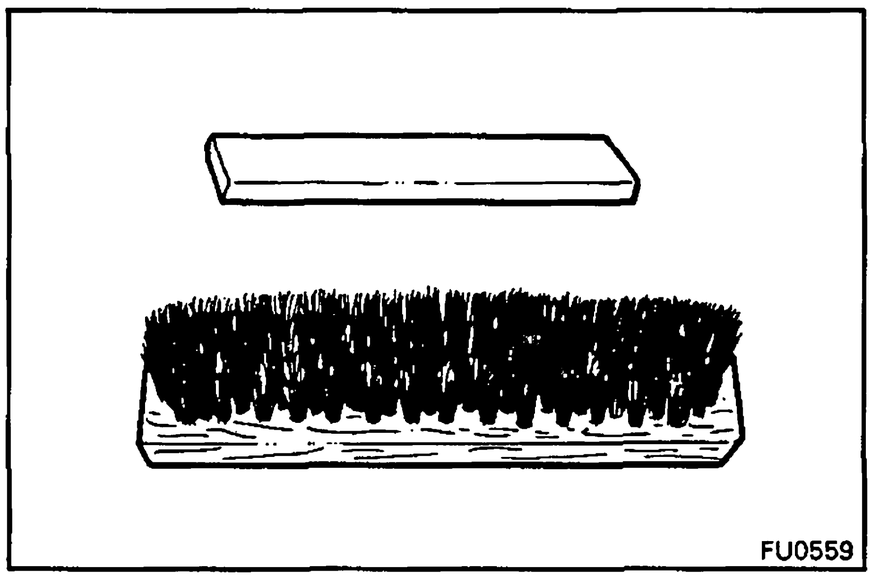

CLEANING AND INSPECTION OF INJECTION NOZZLES

1. NOZZLE CLEANING

(a) To wash the nozzles. Use a wooden stick and brass brush. Wash them in clean diesel fuel.

HINT: Do not touch the nozzle mating surfaces with your fingers.

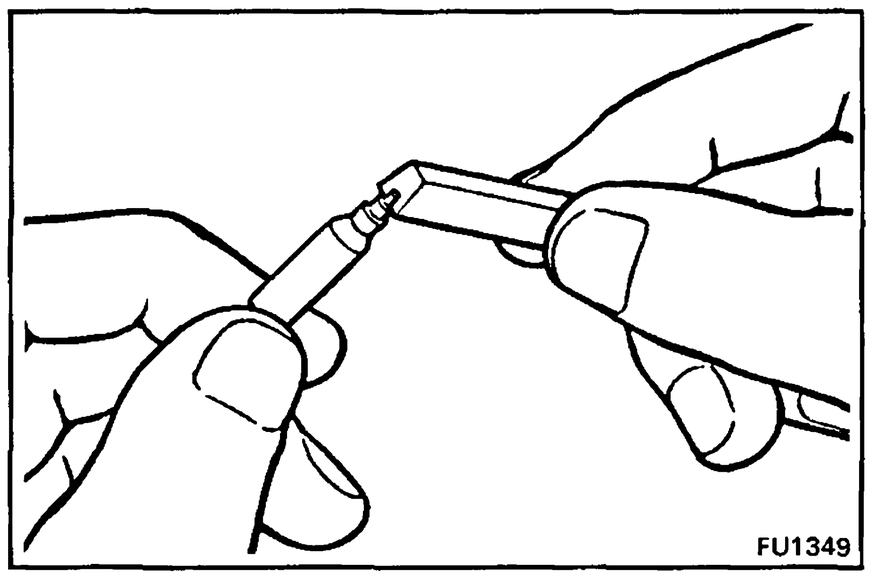

(b) Using a wooden stick, remove the carbon adhering to the nozzle needle tip.

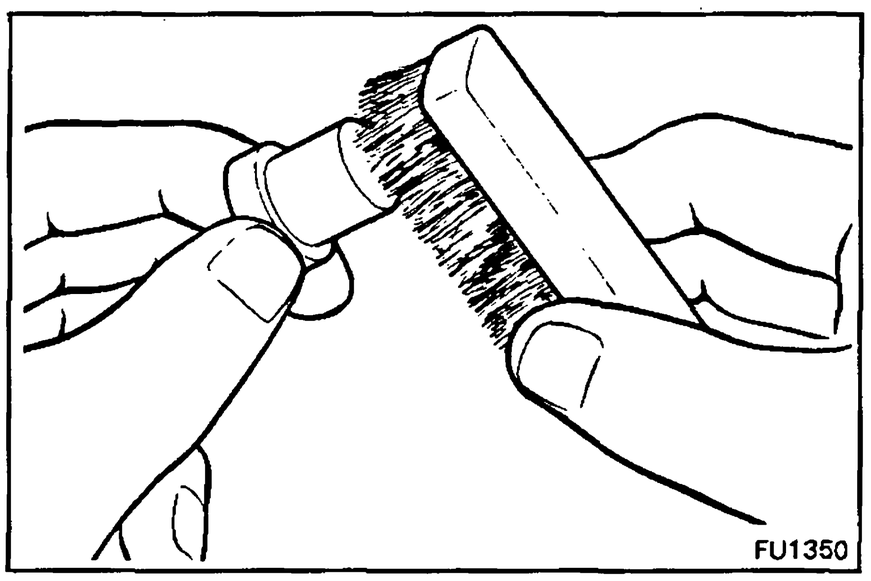

(c) Using a brass brush, remove the carbon from the exterior of the nozzle body (except lapped surface).

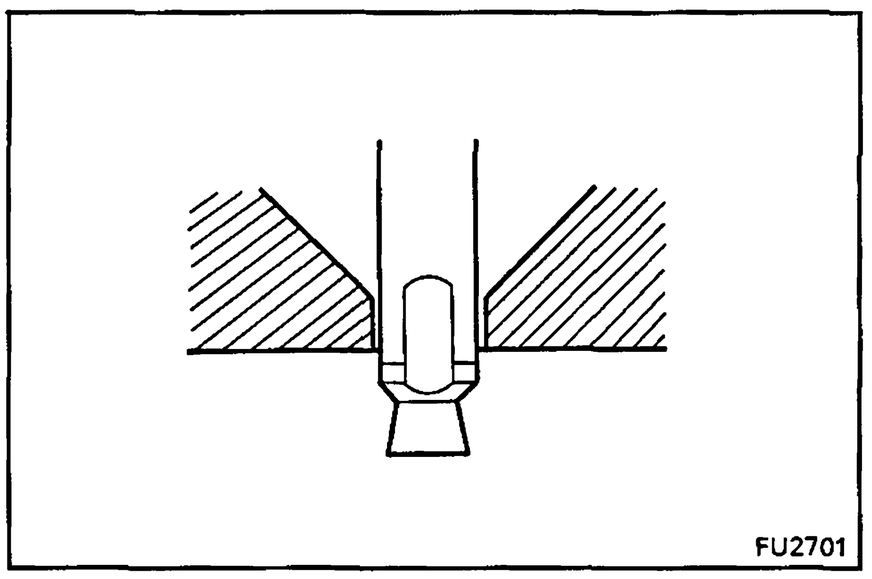

(d) Check the seat of the nozzle body for burns or corrosion.

(e) Check the nozzle needle tip for damage or corrosion.

If any of these conditions are present, replace the nozzle assembly.

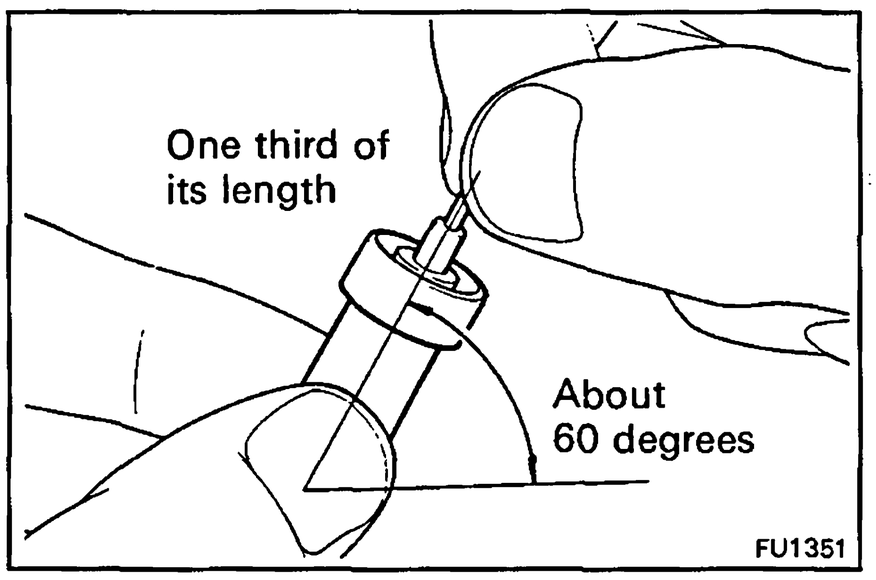

2. INSPECT NOZZLE ASSEMBLY

(a) Wash the nozzle in clean diesel fuel.

HINT: Do not touch the nozzle mating surfaces with your fingers.

(b) Tilt the nozzle body about 60 degrees and pull the needle out about one third of its length.

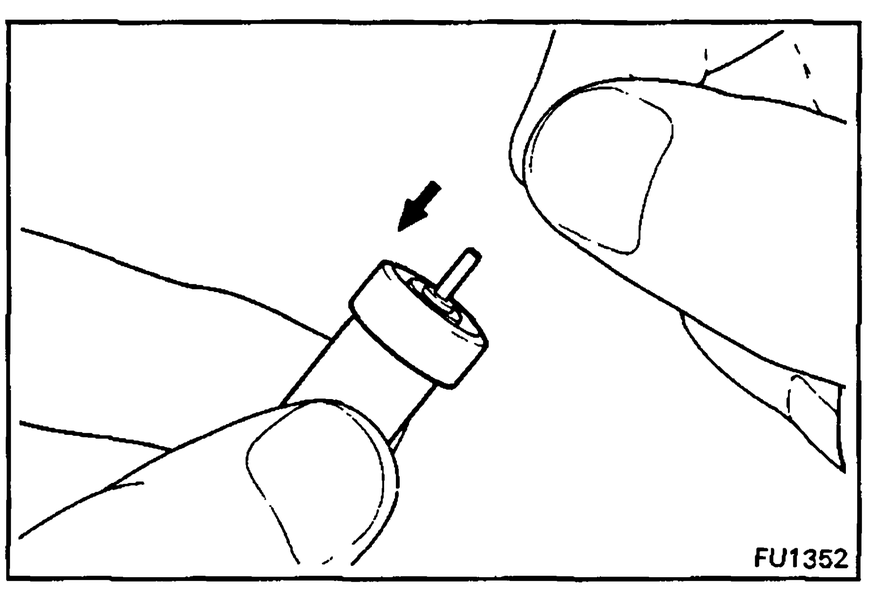

(c) When released, the needle should sink down into the body vent smoothly by its own weight.

(d) Repeat this test, rotating the needle slightly each time.

If the needle does not sink freely, replace the nozzle assembly.

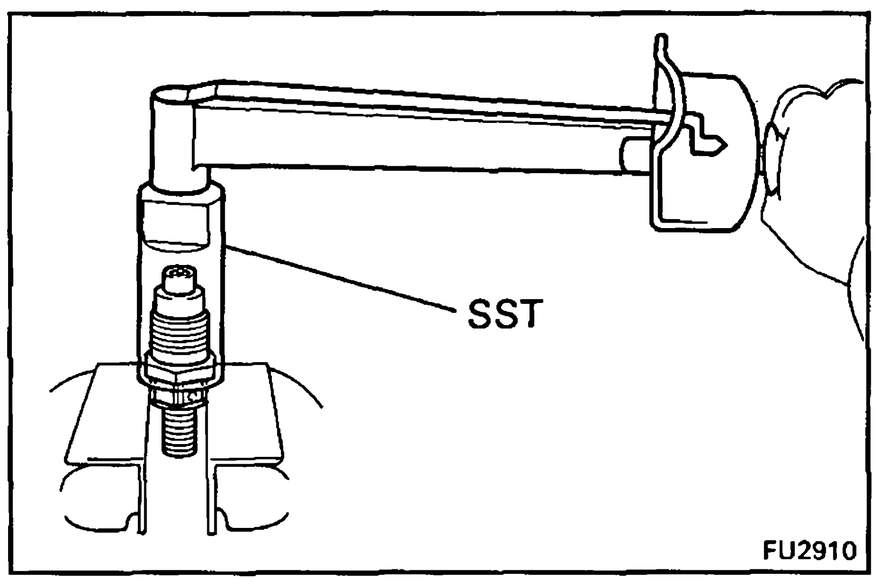

ASSEMBLY OF INJECTION NOZZLES

(See page FU-12)

1. ASSEMBLE INJECTION NOZZLE HOLDERS

(a) Assemble the nozzle holder retaining nut, the nozzle assembly, distance piece, pressure pin, pressure spring, adjusting shim and nozzle holder body, and finger tighten the retaining nut.

(b) Using SST, tighten the retaining nut.

SST 09268-64010

Torque: 375 kg-cm (27 ft-lb, 37 N·m)

NOTICE: Over torquing could cause nozzle deformation and needle adhesion or other defects.

2. PERFORM PRESSURE AND SPRAY PATTERN TEST

(See pages FU-10, 11)

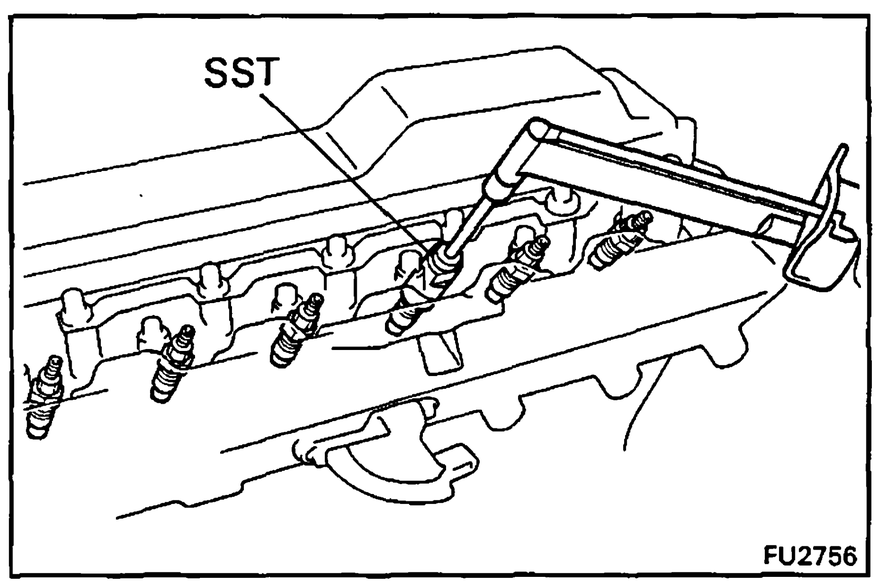

INSTALLATION OF INJECTION NOZZLES

(See page FU-9)

1. INSTALL INJECTION NOZZLES

(a) Place new gaskets and the nozzle seats into the injection nozzle holes of the cylinder head.

(b) Using SST, install the injection nozzles.

SST 09268-64010

Torque: 650 kg-cm (47 ft-lb, 64 N·m)

NOTICE:

- **Over torquing could cause nozzle deformation and needle adhesion or other defects.**
- **When installing the injection nozzle, never torque the nozzle holder body. Torque the retaining nut section.**

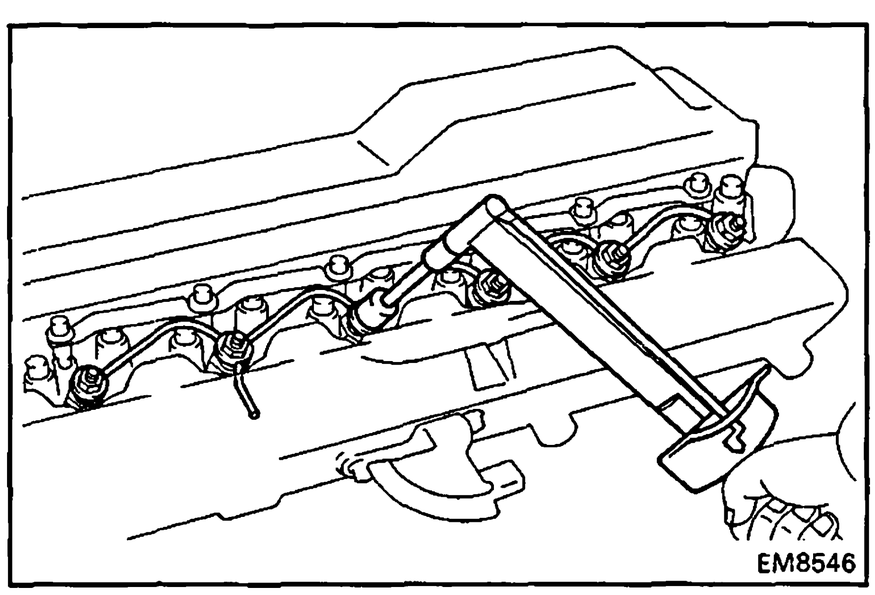

2. INSTALL NOZZLE LEAKAGE PIPE

(a) Install new gaskets and the leakage pipe with the nuts.

Torque: 300 kg-cm (22 ft-lb, 29 N·m)

(b) Connect the fuel hose to the return pipe.

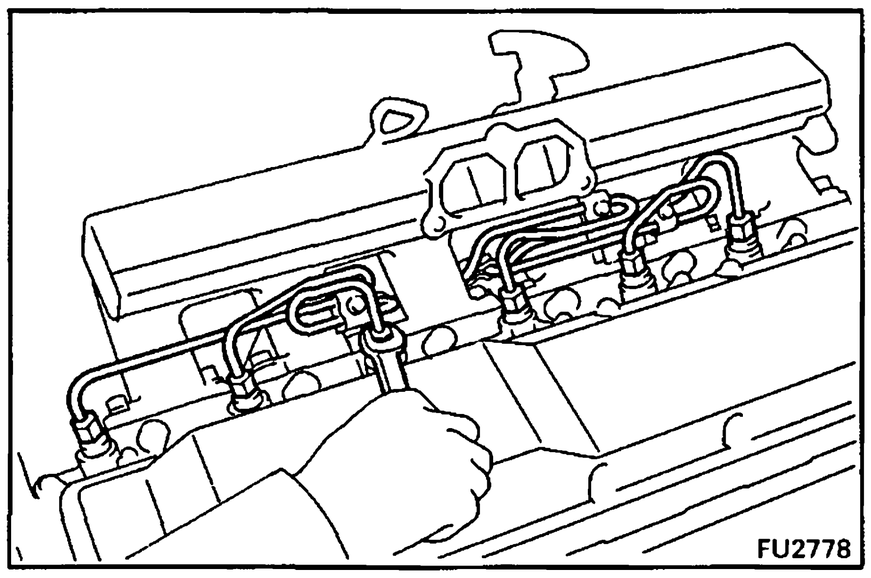

3. **INSTALL INJECTION PIPES**

(a) Place the two clamps on the intake manifold.

(b) Connect the injection pipes to injection nozzle.

Torque: 150 kg-cm (11 ft-lb, 15 N·m)

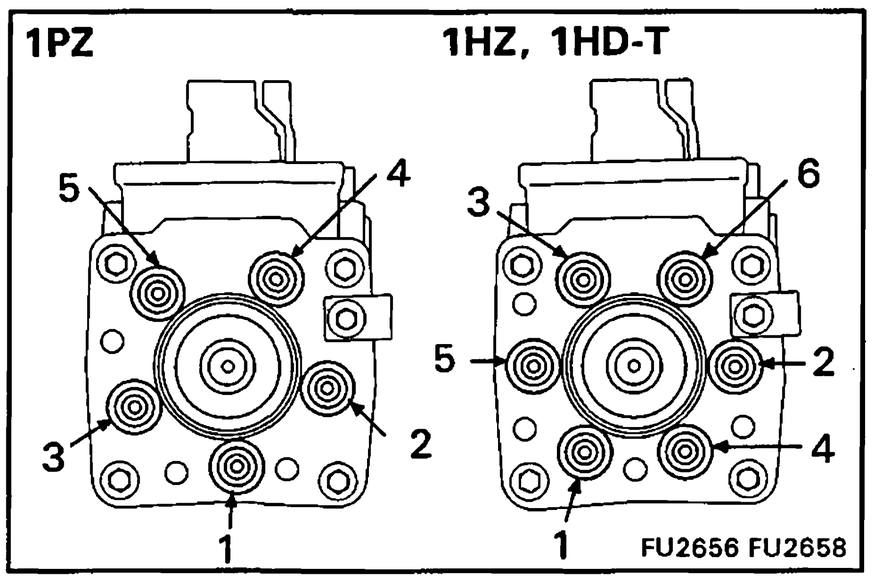

(c) Connect the injection pipes to injection pump.

Torque: 150 kg-cm (11 ft-lb, 15 N·m)

(d) Secure the injection pipes with clamps and bolts.

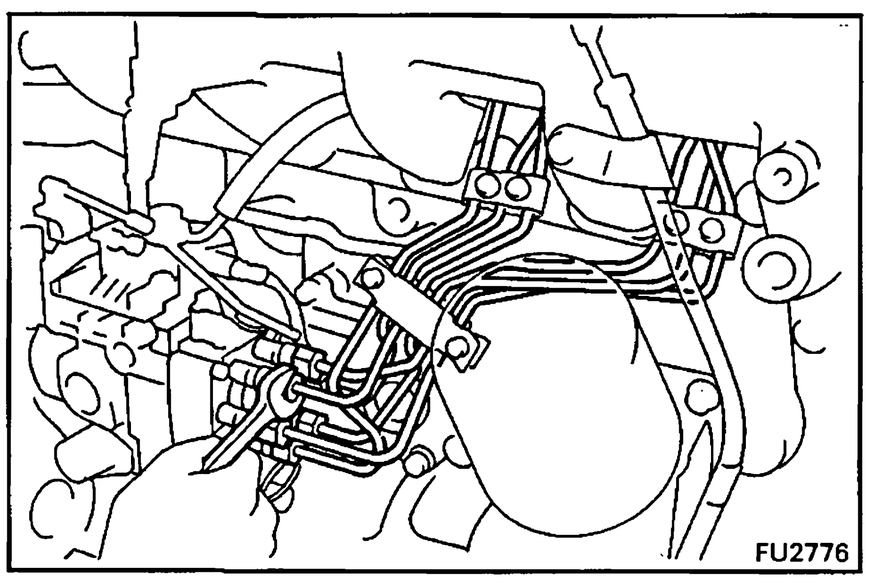

4. **INSTALL INTAKE PIPE**
(See step 3 on page EM-38)

5. **START ENGINE AND CHECK FOR FUEL LEAKS**

INJECTION NOZZLES (1HD-T)

REMOVAL OF INJECTION NOZZLES

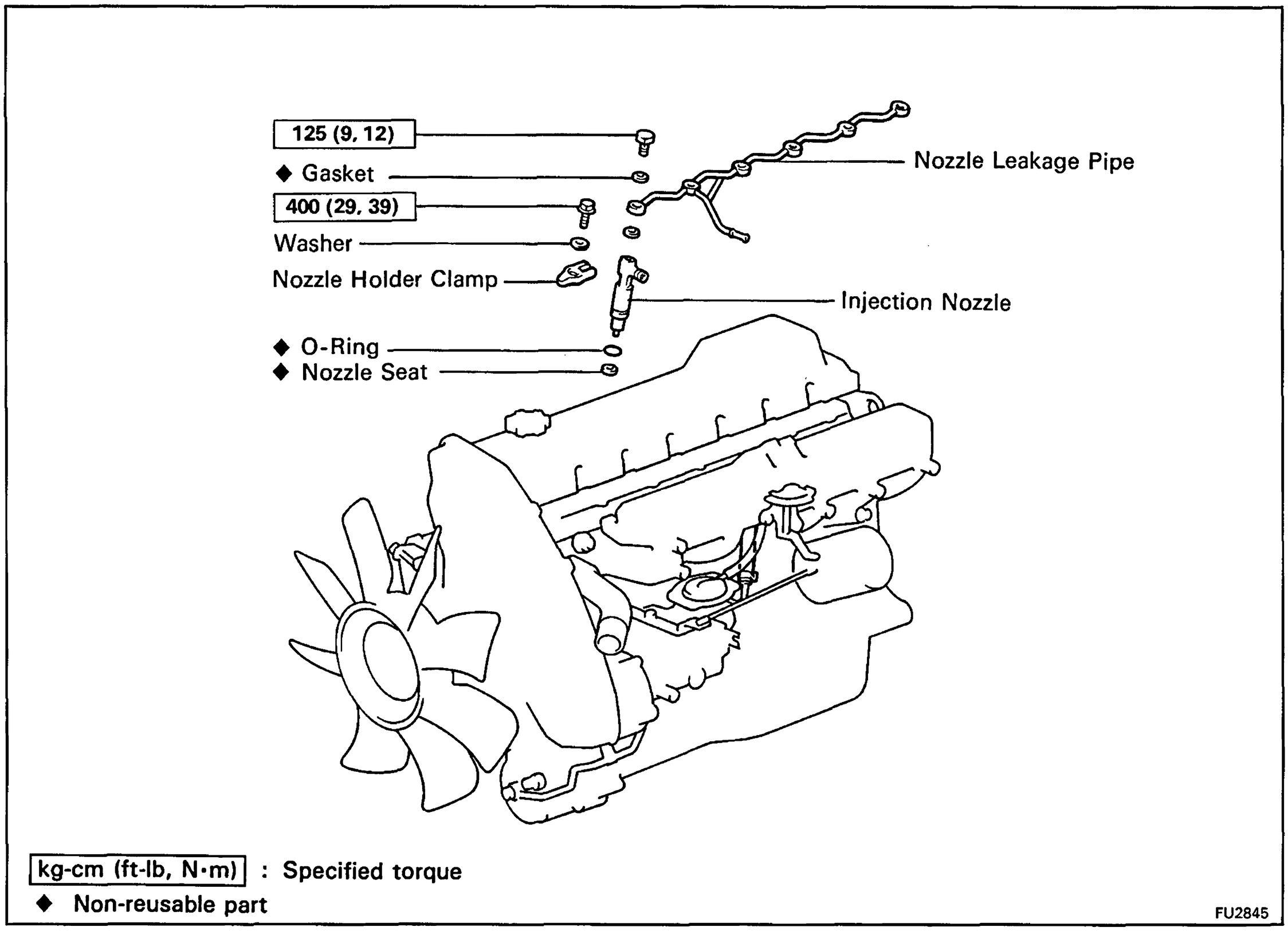

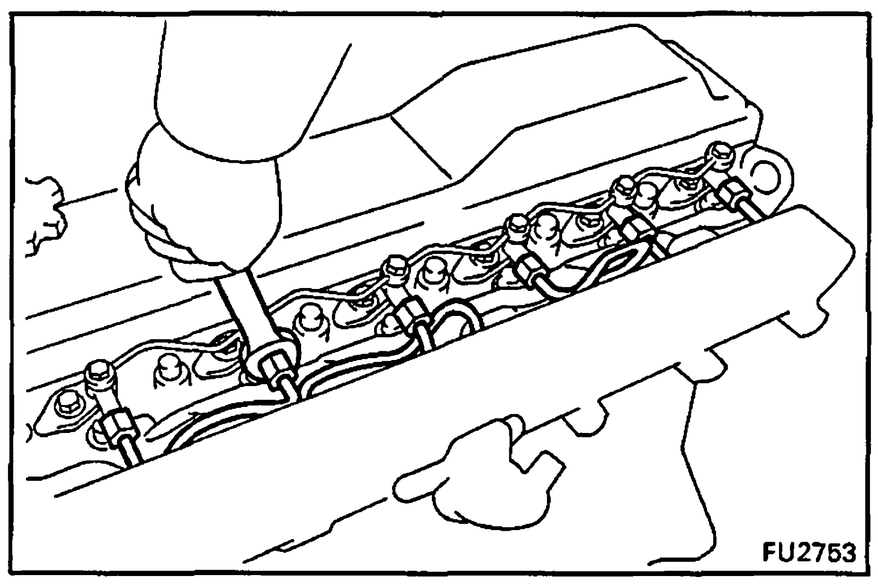

1. **REMOVE INTAKE PIPE**
   (See step 6 on page EM-34)

2. **DISCONNECT INJECTION PIPES**

   Loosen the union nuts of the six injection pipes from the six injection nozzles.

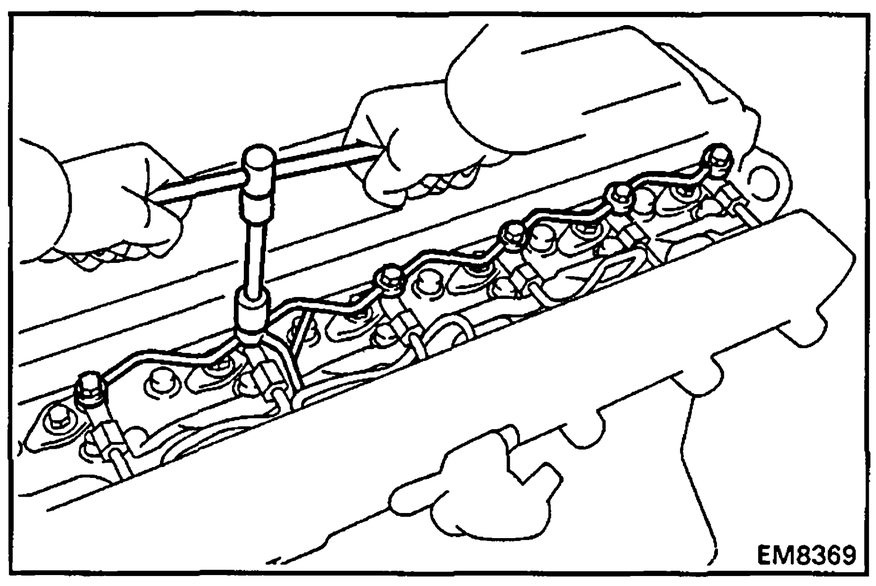

3. **REMOVE NOZZLE LEAKAGE PIPE**
   (a) Disconnect the fuel hose from the nozzle leakage pipe.
   (b) Remove the six hollow bolts, leakage pipe and twelve gaskets.

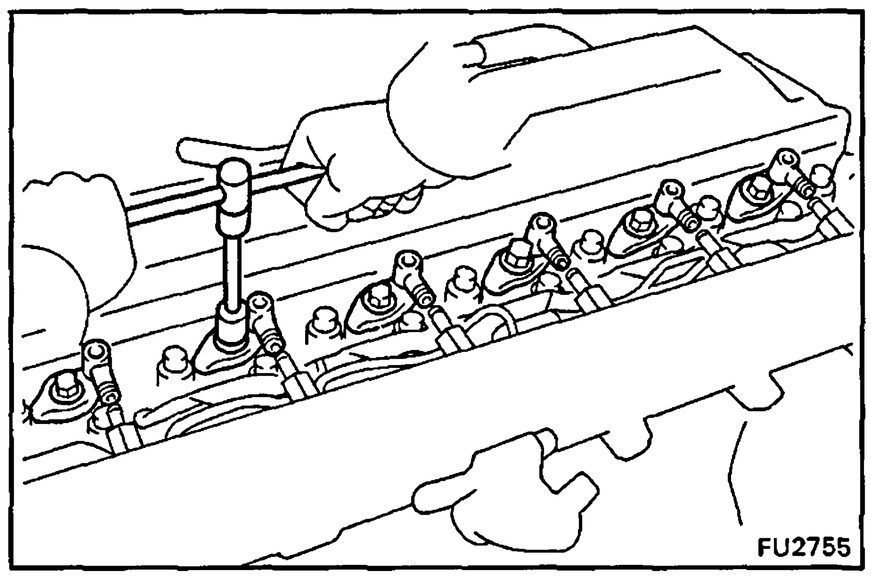

4. REMOVE INJECTION NOZZLES

(a) Remove the bolt, washer, nozzle holder clamp, injection nozzle and seat.

(b) Remove the O-ring from the injection nozzle.

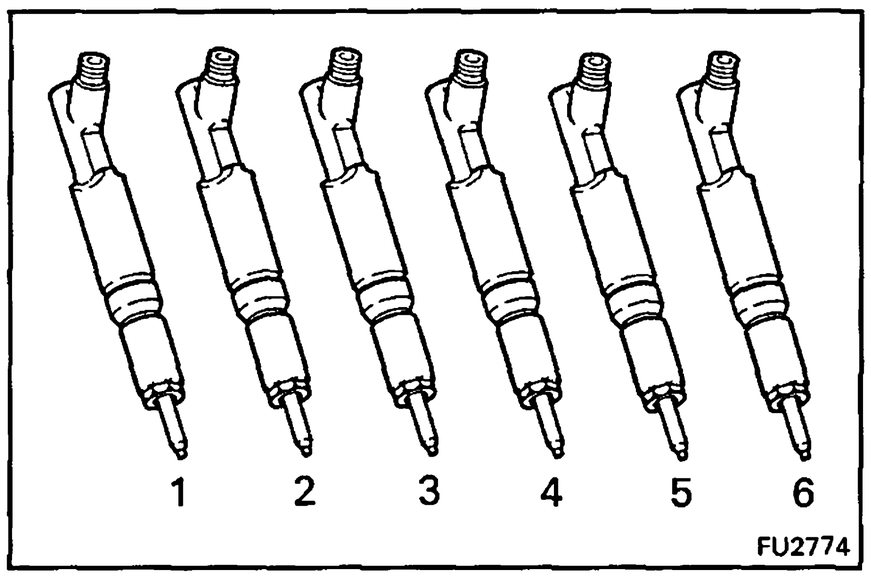

HINT: Arrange the injection nozzles in correct order.

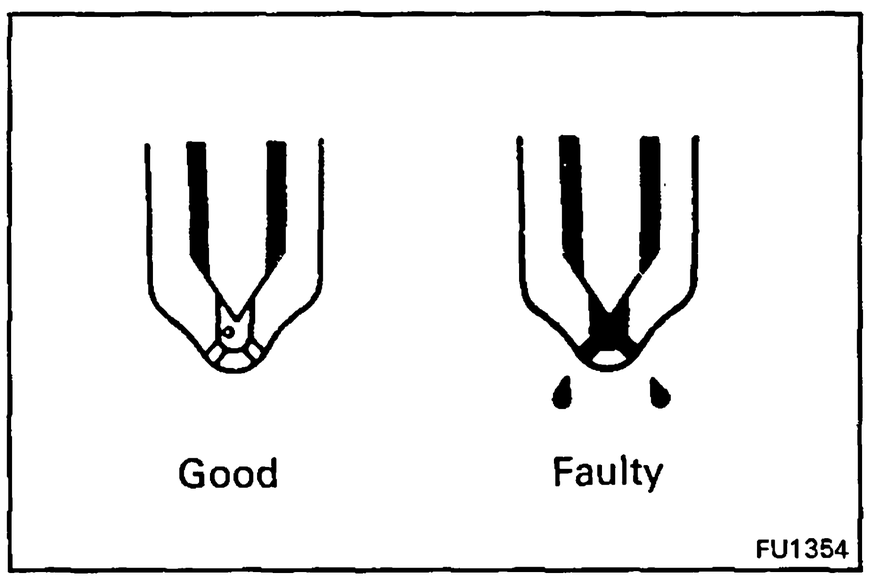

TEST OF INJECTION NOZZLES

1. LEAKAGE TEST

While maintaining pressure at about 10 – 20 kg/cm^2 (142 – 284 psi, 981 – 1,961 kPa) below No.1 opening pressure (adjust by tester handle), check that there is no dripping for 10 seconds from the injection hole or around the retaining nut.

If the nozzle drips within 10 seconds, replace or clean and overhaul the nozzle assembly.

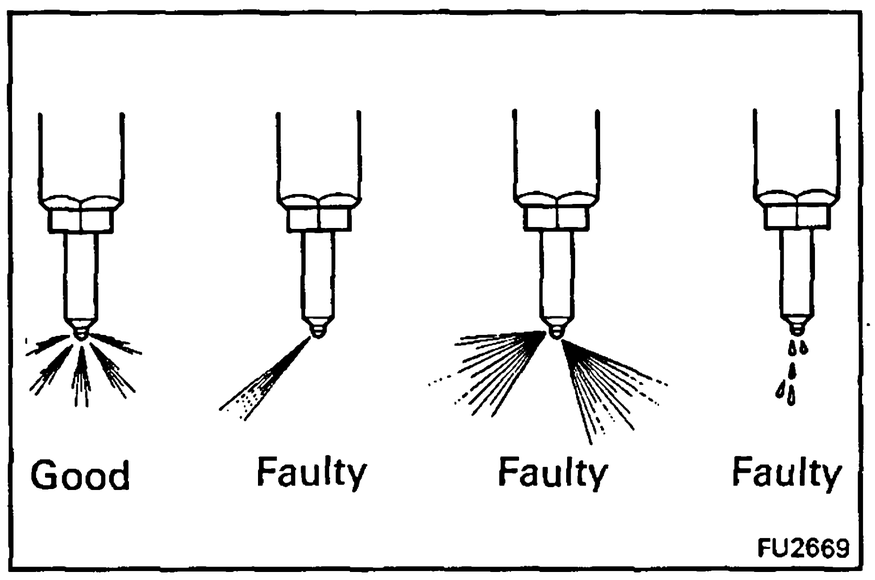

2. SPRAY PATTERN TEST

(a) The injection nozzle should shudder at a certain pumping speed between 15 – 60 times (old nozzle) or 30 – 60 times (new nozzle) per minute.

(b) Check the spray pattern during shuddering.

If the spray pattern is not correct during shuddering, the nozzle must be clean or replaced.

COMPONENTS

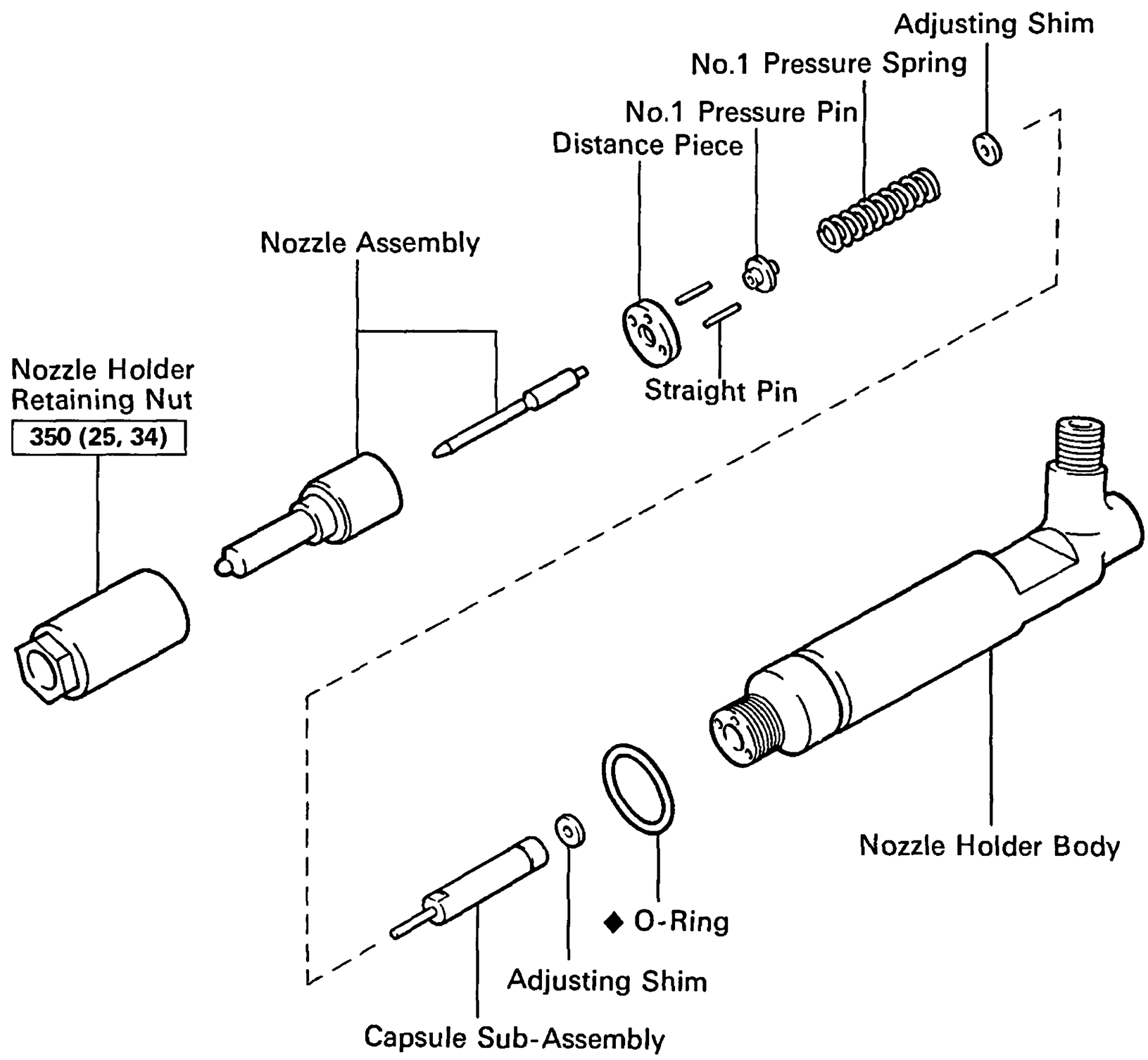

kg-cm (ft-lb, N•m) : Specified torque

◆ Non-reusable part

FU2880

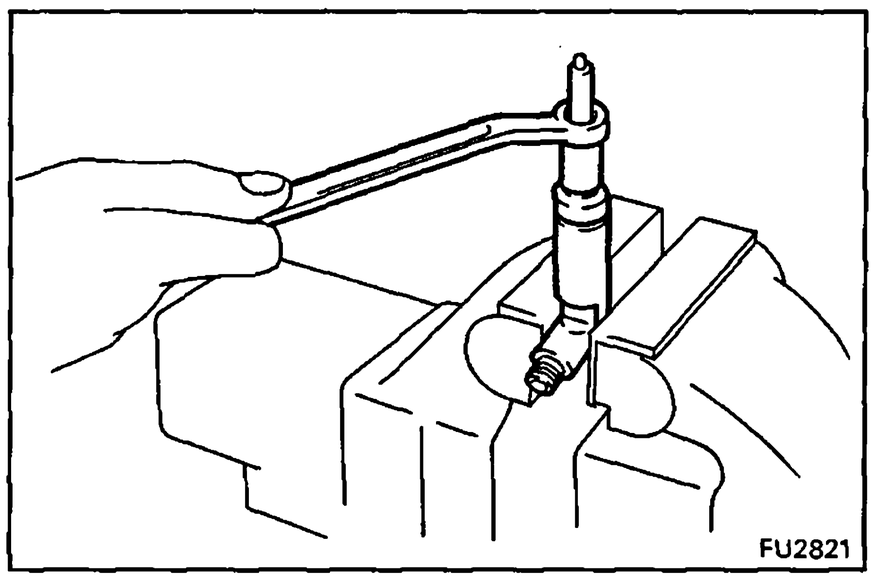

FU2821

DISASSEMBLY OF INJECTION NOZZLES

DISASSEMBLE INJECTION NOZZLES

(a) Remove the nozzle holder retaining nut.

NOTICE: When disassembling the nozzle, be careful not to drop the inner parts.

(b) Remove the nozzle sub-assembly and distance piece, straight pins, No.1 pressure pin, No.1 pressure spring, adjusting shim, capsule sub-assembly and adjusting shim.

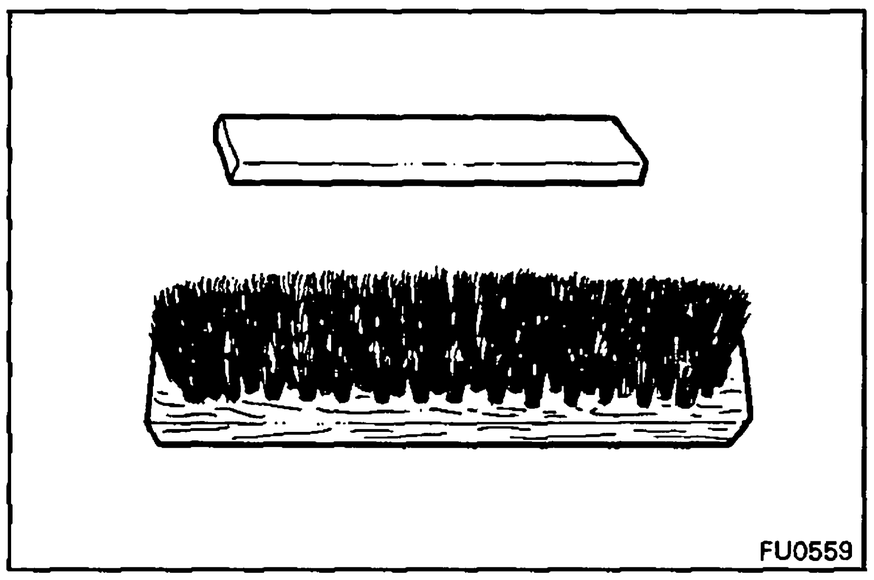

FU0559

CLEANING AND INSPECTION OF INJECTION NOZZLES

1. NOZZLE CLEANING

(a) To wash the nozzles. Use a wooden stick and brass brush. Wash them in clean diesel fuel.

HINT: Do not touch the nozzle mating surfaces with your fingers.

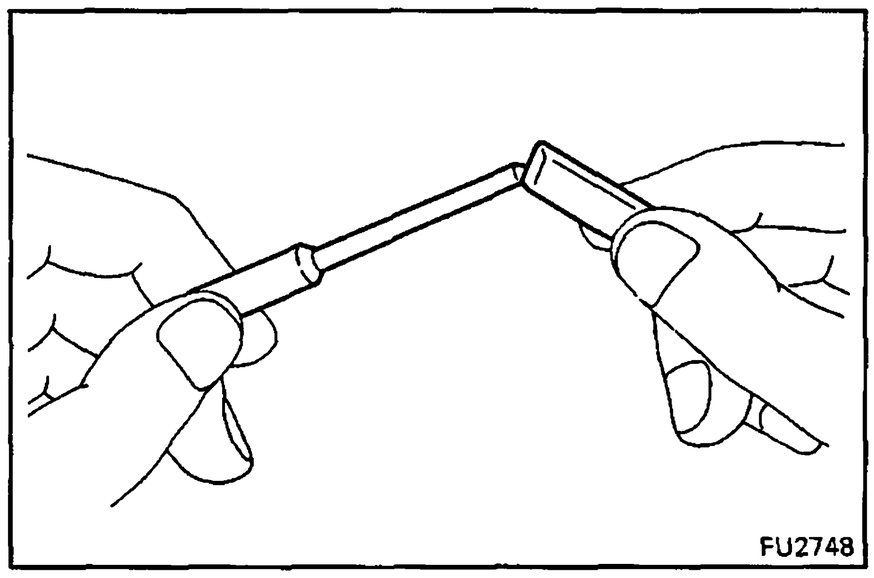

(b) Using a wooden stick, remove the carbon adhering to the nozzle needle tip.

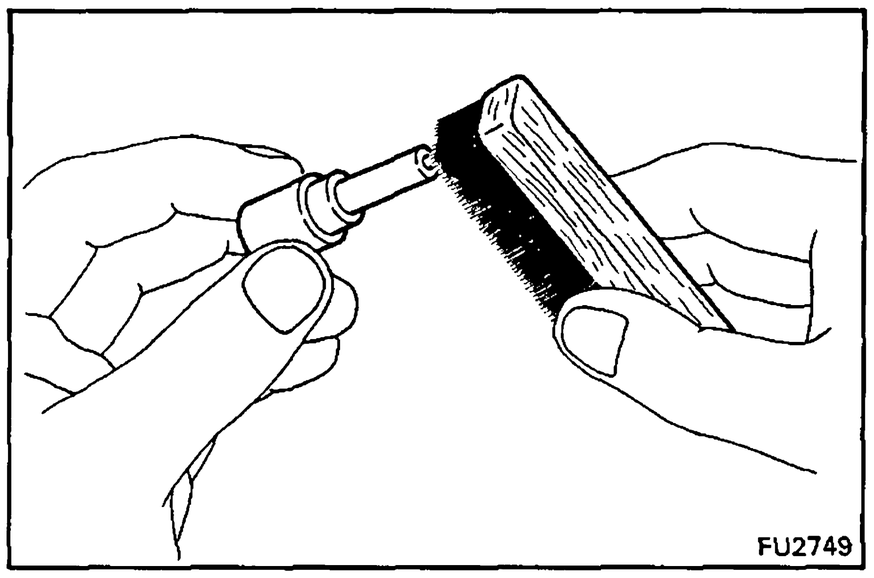

(c) Using a brass brush, remove the carbon from the exterior of the nozzle body (except lapped surface).

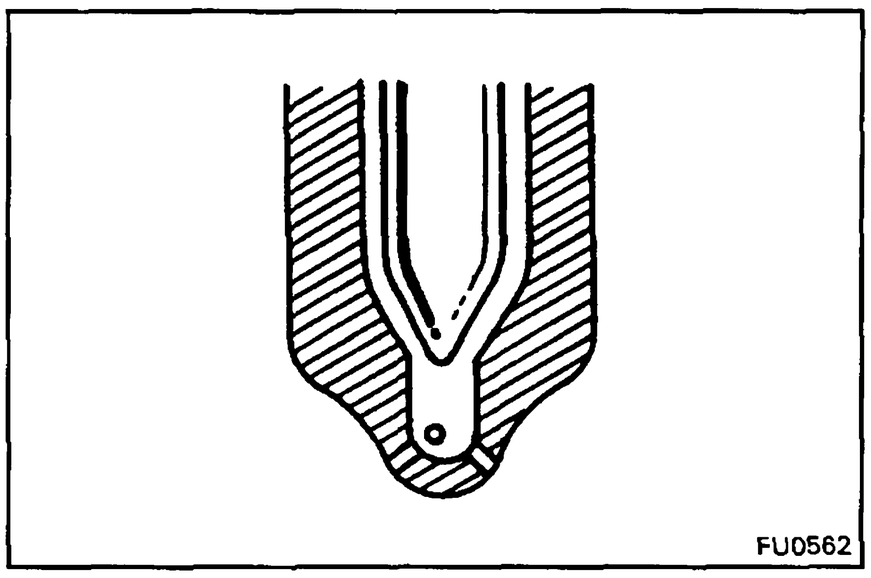

(d) Check the seat of the nozzle body for burns or corrosion.

(e) Check the nozzle needle tip for damage or corrosion.

If any of these conditions are present, replace the nozzle assembly.

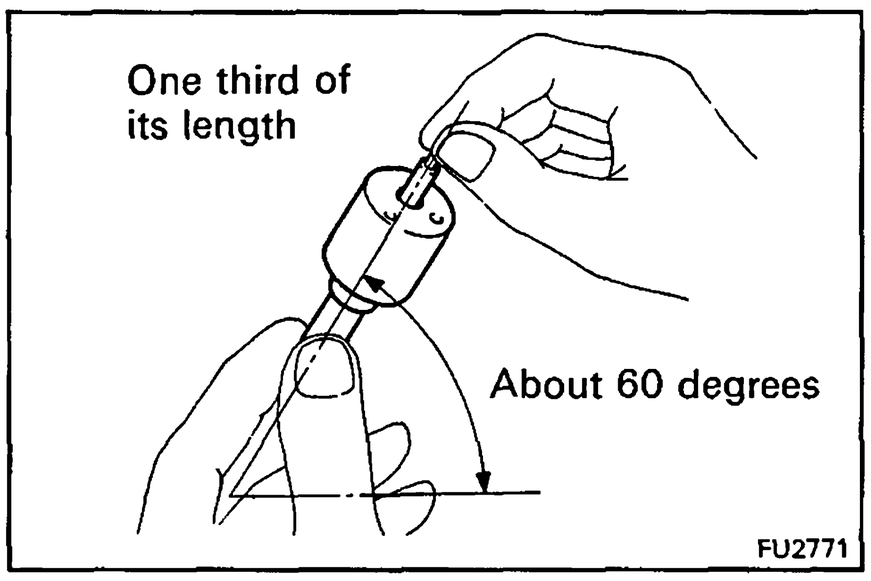

2. INSPECT NOZZLE ASSEMBLY

(a) Wash the nozzle in clean diesel fuel.

HINT: Do not touch the nozzle mating surfaces with your fingers.

(b) Tilt the nozzle body about 60 degrees and pull the needle out about one third of its length.

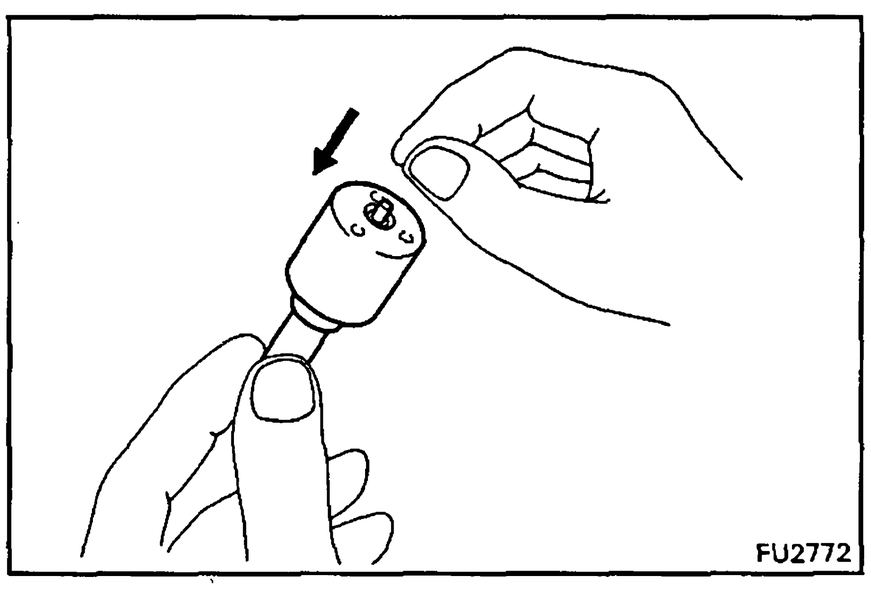

(c) When released, the needle should sink down into the body vent smoothly by its own weight.

(d) Repeat this test, rotating the needle slightly each time.

If the needle does not sink freely, replace the nozzle assembly.

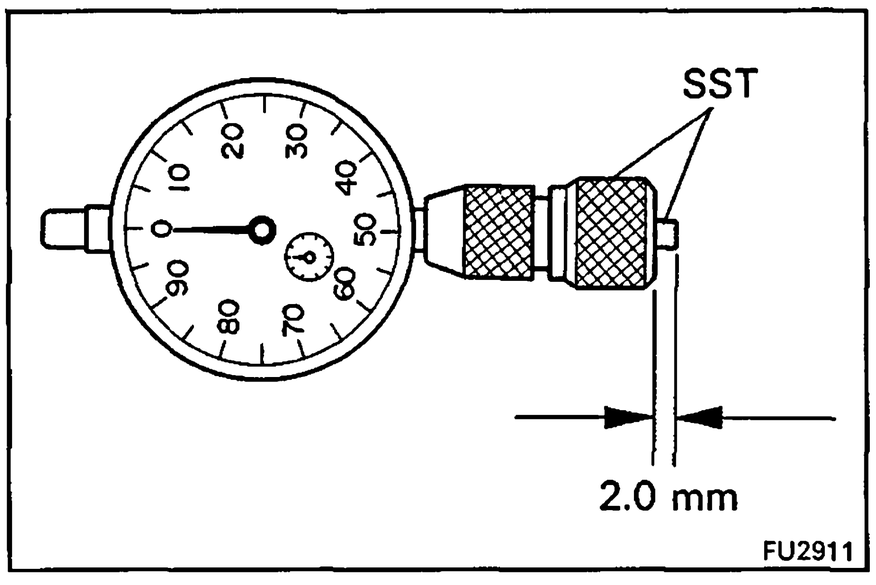

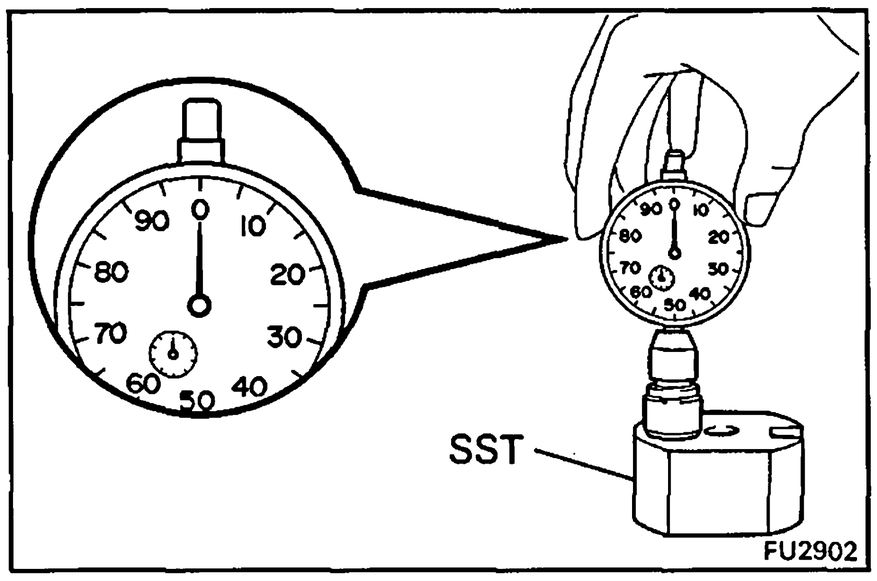

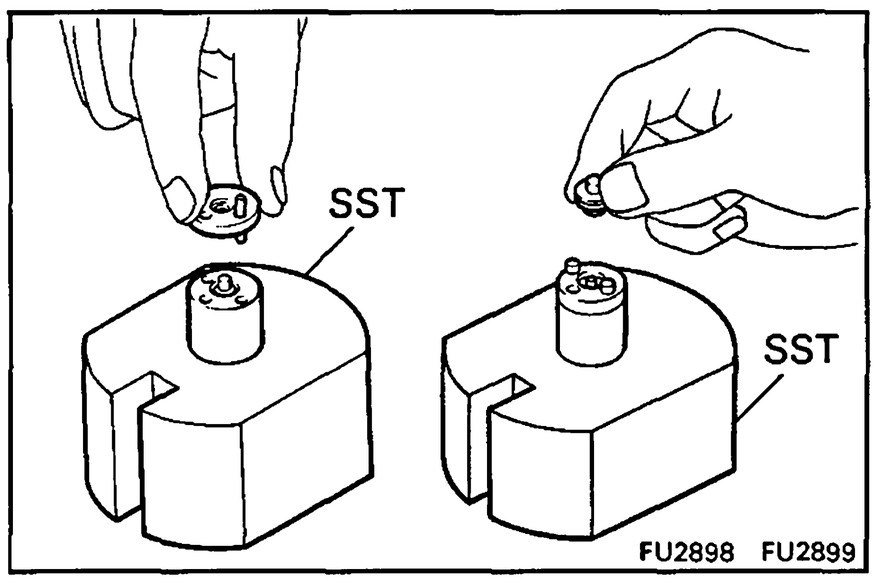

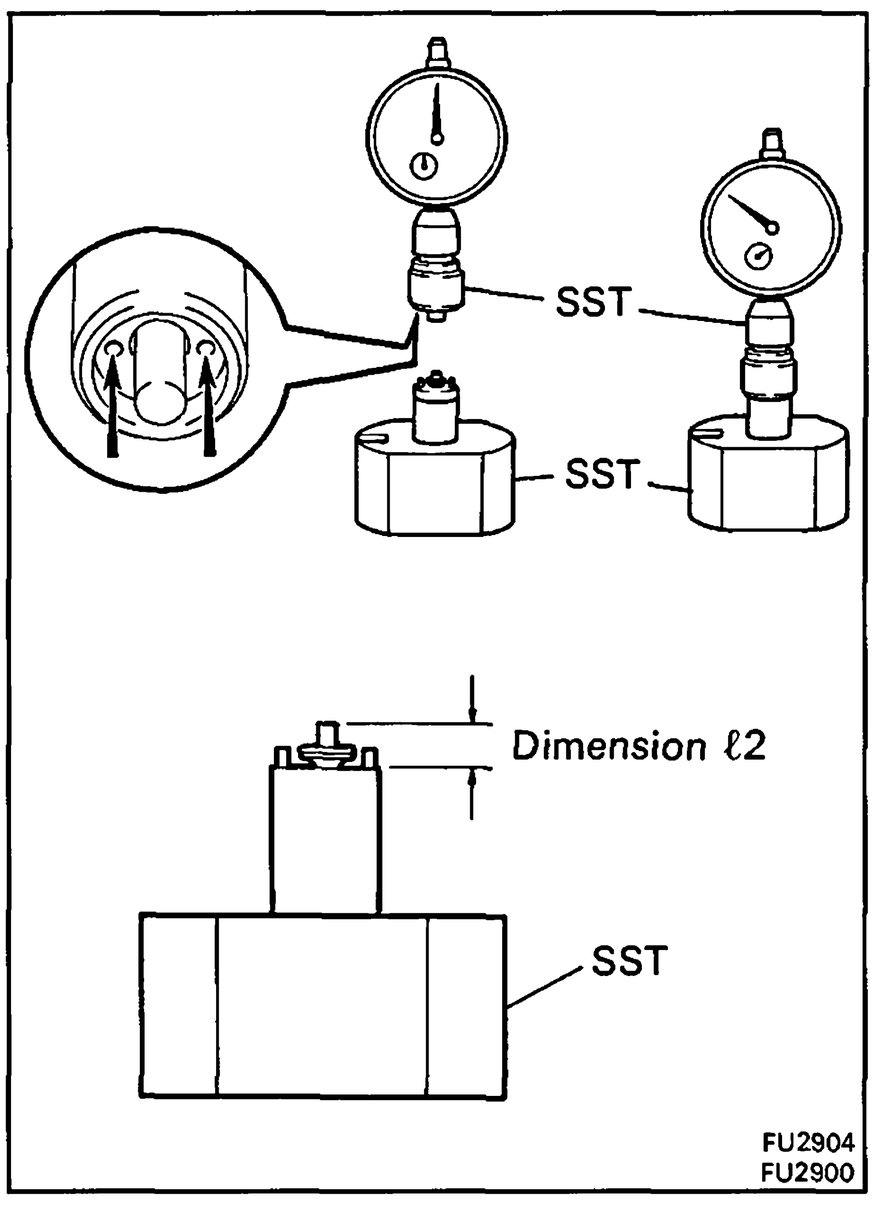

ASSEMBLY AND ADJUSTMENT OF INJECTION NOZZLES

(See page FU-18)

1. ADJUST PRE-LIFT

NOTICE: Pre-lift adjustment requires great precision, so when performing this operation, make sure everything is clean and that no foreign substances are trapped.

(a) Install the SST to the dial indicator so that the protrusion shown in the illustration is 2.0 mm (0.079 in.) or less.

SST 09268-17010

(b) Set the dial indicator scale to 0 mm (0 in.) on top of SST or surface plate.

SST 09268-17010

(c) Place the nozzle sub-assembly, distance piece, straight pins and No.1 pressure pin on the SST as shown in the illustration.

SST 09268-17010

(d) Install SST holes to the straight pins and measure dimension ℓ2.

SST 09268-17010

Dimension ℓ2 (Reference): 4.70 mm (0.1850 in.)

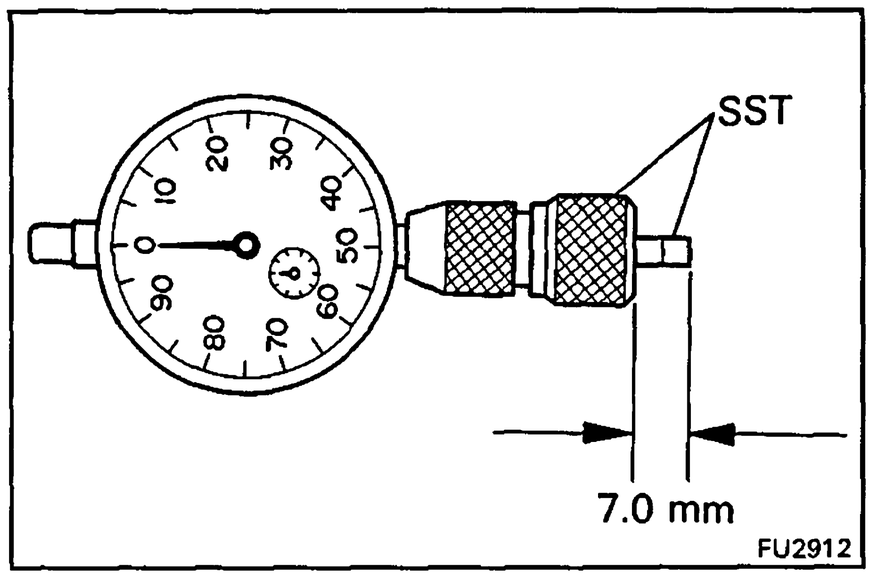

(e) Install SST to the dial indicator so that the protrusion shown in the illustration is 7.0 mm (0.276 in.) or less.

SST 09268-17010

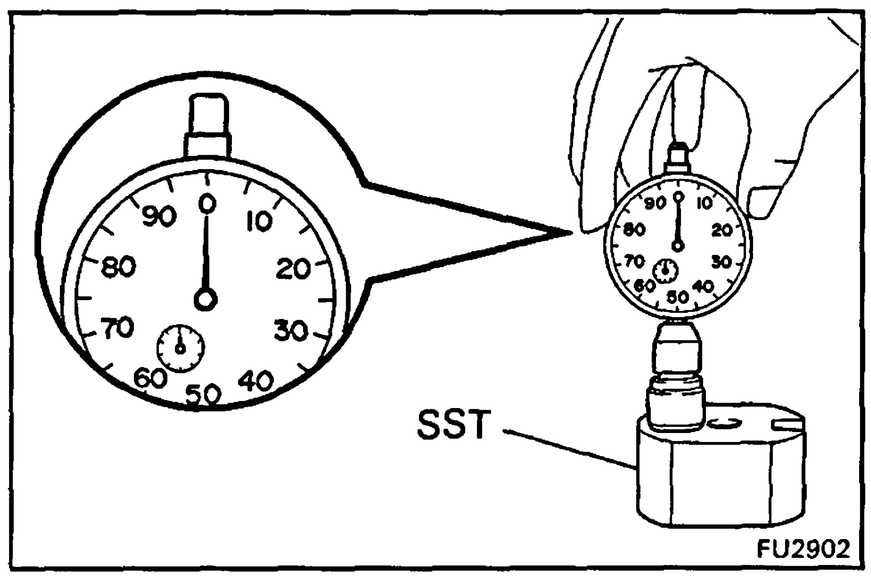

(f) Set the dial indicator scale to 0 mm (0 in.) on top of SST or surface plate.

SST 09268-17010

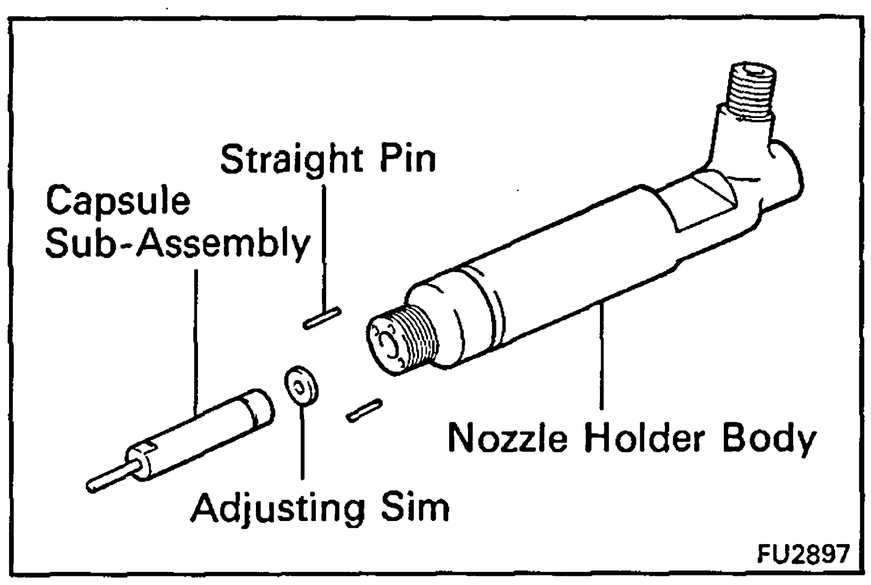

(g) Place the adjusting shim, the capsule sub-assembly and straight pins on the nozzle holder body.

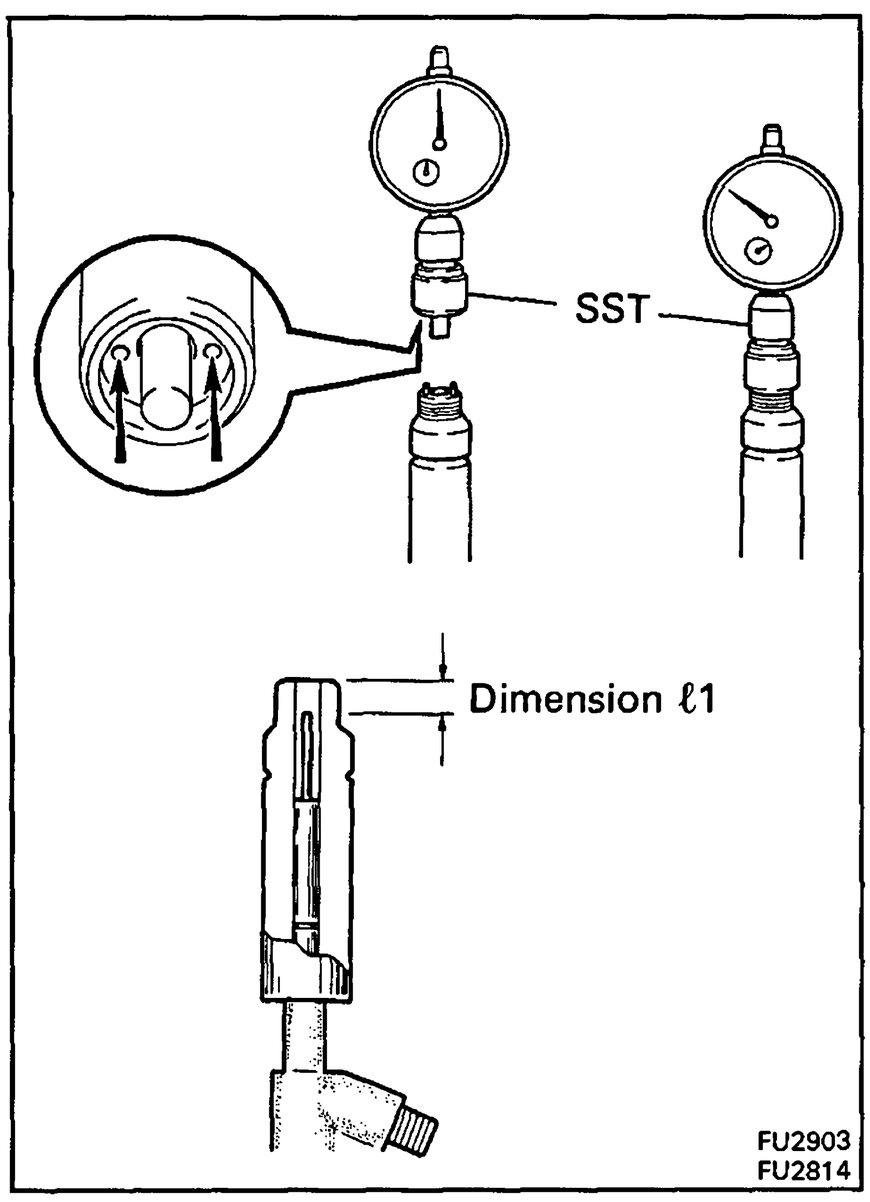

(h) Install SST holes to the straight pins and measure dimension ℓ1.

SST 09268-17010

Dimension ℓ1 (Reference): 4.79 mm (0.1886 in.)

(i) Subtract the dimension ℓ2 from the dimension ℓ1.

Pre-lift: 0.08 – 0.10 mm (0.0031 – 0.0039 in.)

If the pre-lift dimension is not as specified, change the adjusting shim on the top of the capsule sub-assembly.

Adjusting shim thickness mm (in.)		
0.700 (0.0276)	1.310 (0.0516)	1.520 (0.0598)
0.750 (0.0295)	1.320 (0.0520)	1.530 (0.0602)
0.800 (0.0315)	1.330 (0.0524)	1.540 (0.0606)
0.850 (0.0335)	1.340 (0.0528)	1.550 (0.0610)
0.900 (0.0354)	1.350 (0.0531)	1.560 (0.0614)
0.950 (0.0374)	1.360 (0.0535)	1.570 (0.0618)
0.975 (0.0384)	1.370 (0.0539)	1.580 (0.0622)
1.000 (0.0394)	1.380 (0.0543)	1.590 (0.0626)
1.025 (0.0404)	1.390 (0.0547)	1.600 (0.0630)
1.050 (0.0413)	1.400 (0.0551)	1.610 (0.0634)
1.075 (0.0423)	1.410 (0.0555)	1.620 (0.0638)
1.100 (0.0433)	1.420 (0.0559)	1.630 (0.0641)
1.125 (0.0443)	1.430 (0.0563)	1.640 (0.0646)
1.150 (0.0453)	1.440 (0.0567)	1.650 (0.0650)
1.175 (0.0463)	1.450 (0.0571)	1.660 (0.0654)
1.200 (0.0472)	1.460 (0.0575)	1.670 (0.0657)
1.225 (0.0482)	1.470 (0.0579)	1.680 (0.0661)
1.250 (0.0492)	1.480 (0.0583)	1.690 (0.0665)
1.280 (0.0504)	1.490 (0.0587)	1.700 (0.0669)
1.290 (0.0508)	1.500 (0.0591)	1.750 (0.0689)
1.300 (0.0512)	1.510 (0.0594)	1.800 (0.0709)

HINT: If the shim is made thicker, the pre-lift is decreased.

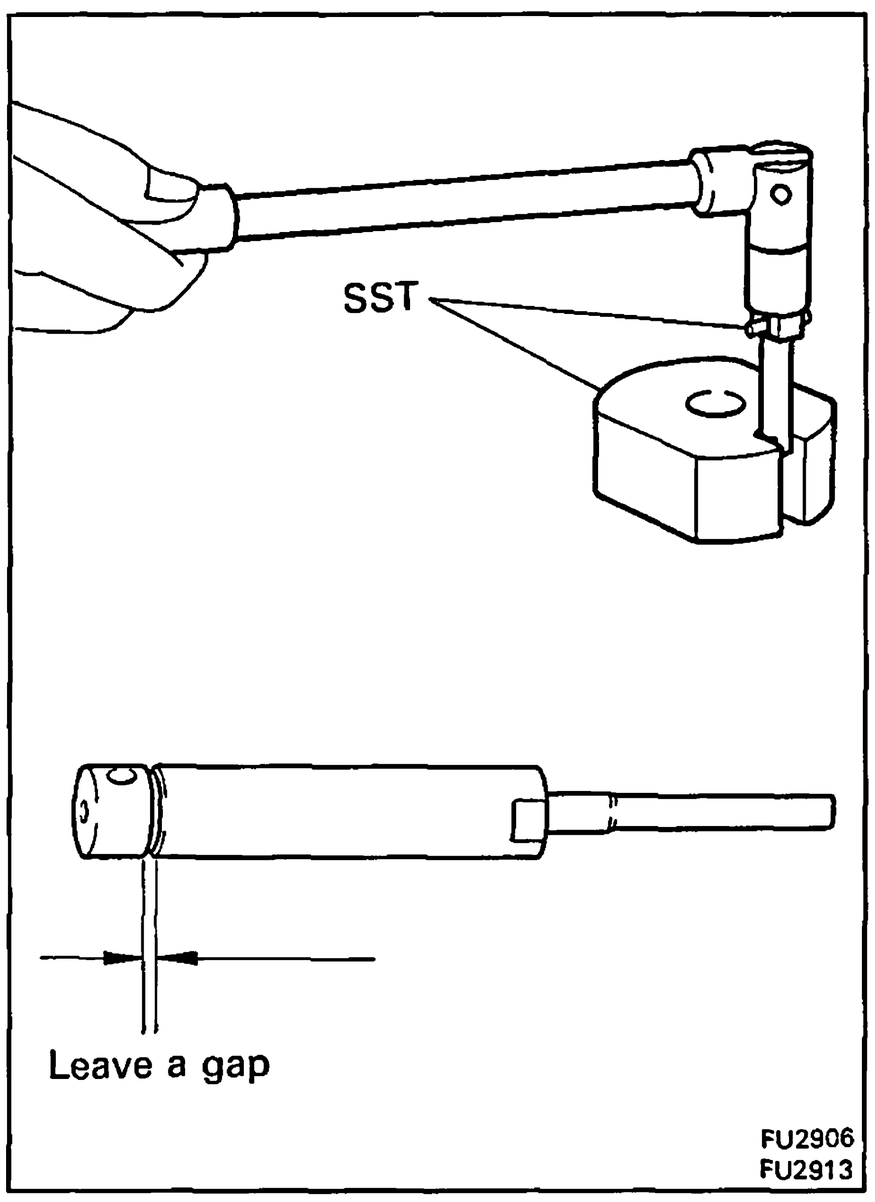

2. CHECK NO.2 OPENING PRESSURE

(a) Loosen by one or two turns the plug screw of the capsule sub-assembly with SST.

SST 09268-17010

HINT: When the plug screw is loosened by one or two turns, the pre-lift from installation in the nozzle holder becomes 0 mm (0 in.).

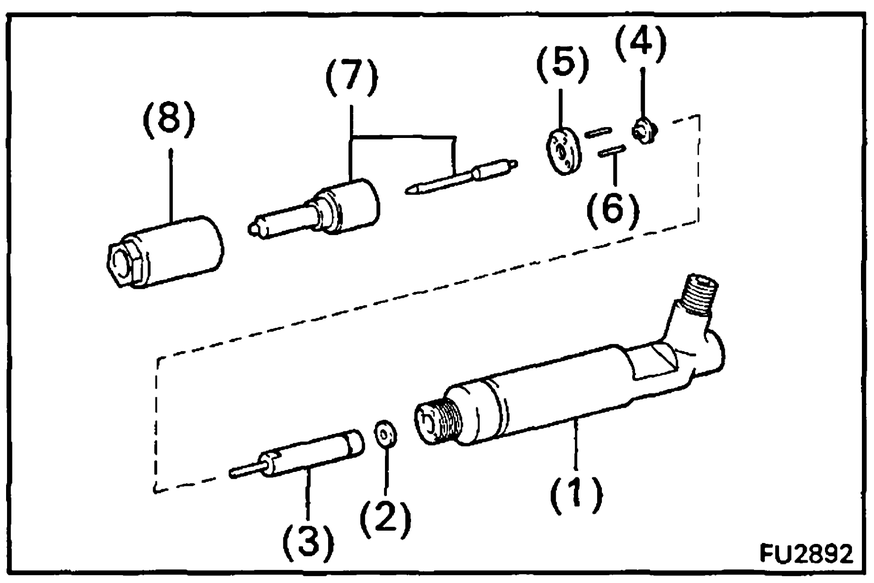

(b) Assemble the following parts:

(1) Nozzle holder body
(2) Adjusting shim selected in step 1 above
(3) Capsule sub-assembly in the condition from step 2 (a)
(4) No.1 pressure pin
(5) Distance piece
(6) Straight pins
(7) Nozzle sub-assembly
(8) Retaining nut

NOTICE: Do not assemble the No.1 pressure spring and the adjusting shim for adjustment of the No.1 opening pressure.

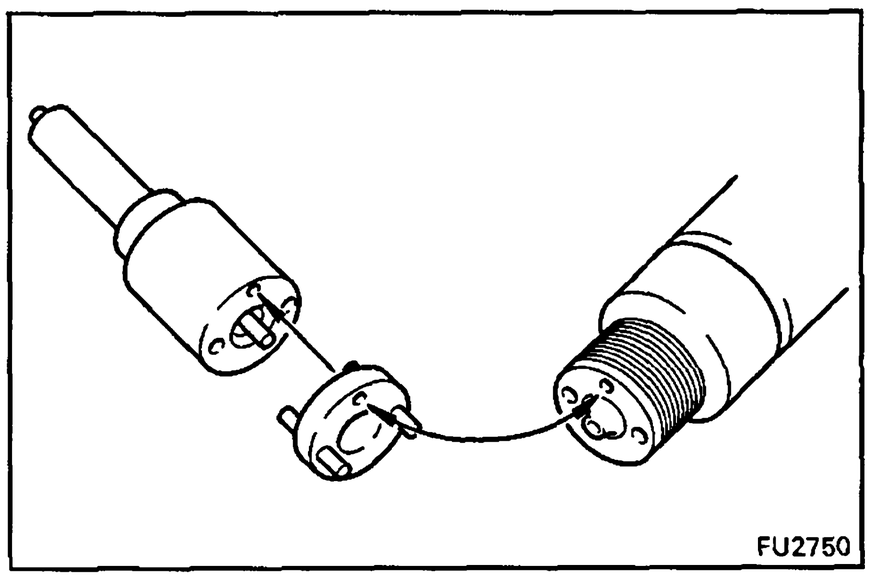

HINT: Align the holes of the nozzle body, distance piece and nozzle holder body.

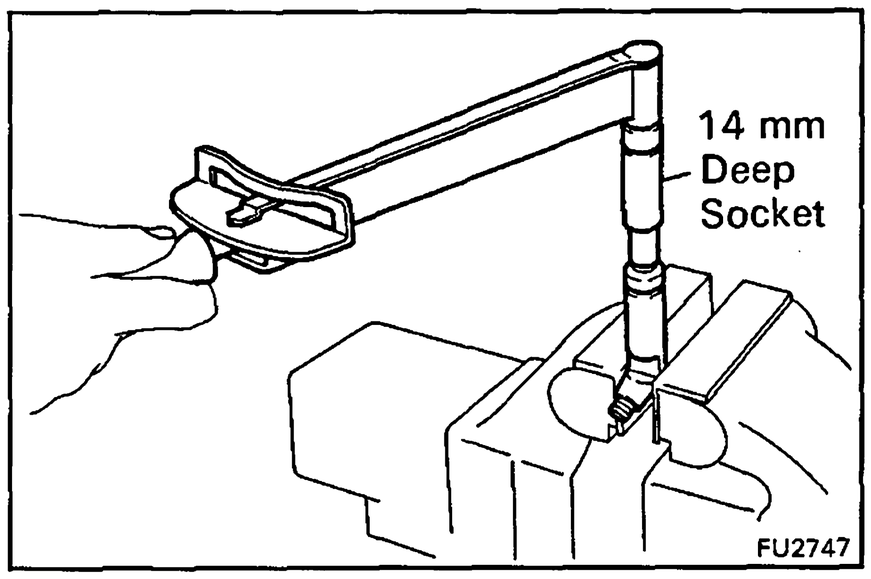

(c) Using a 14 mm deep socket wrench, torque the retaining nut.

Torque: 350 kg-cm (25 ft-lb, 34 N·m)

NOTICE: Over torquing could cause nozzle deformation and needle adhesion or other defects.

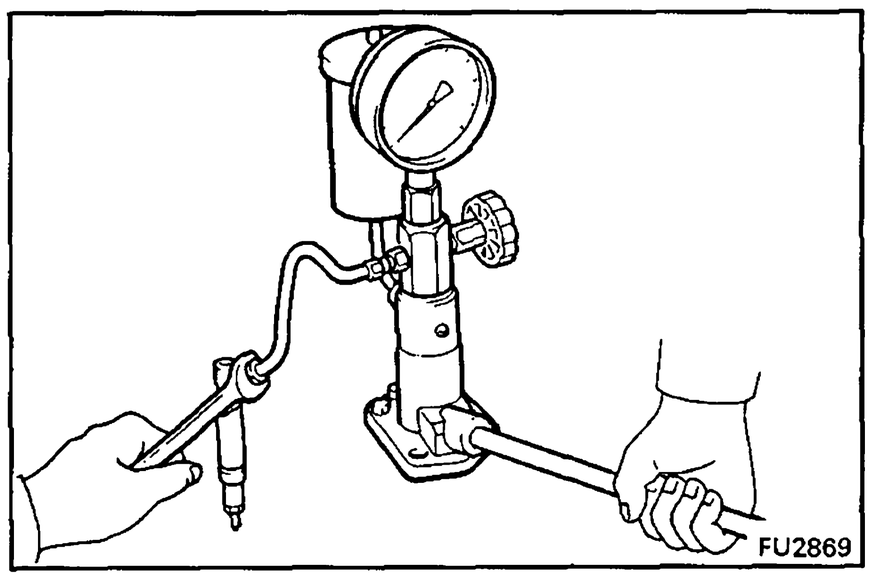

(d) Install the injection nozzle to the injection nozzle hand tester and bleed air from the union nut.

CAUTION: Do not place your finger over the nozzle injection hole.

(e) Pump the tester handle a few times as fast as possible to discharge the carbon from the injection hole.

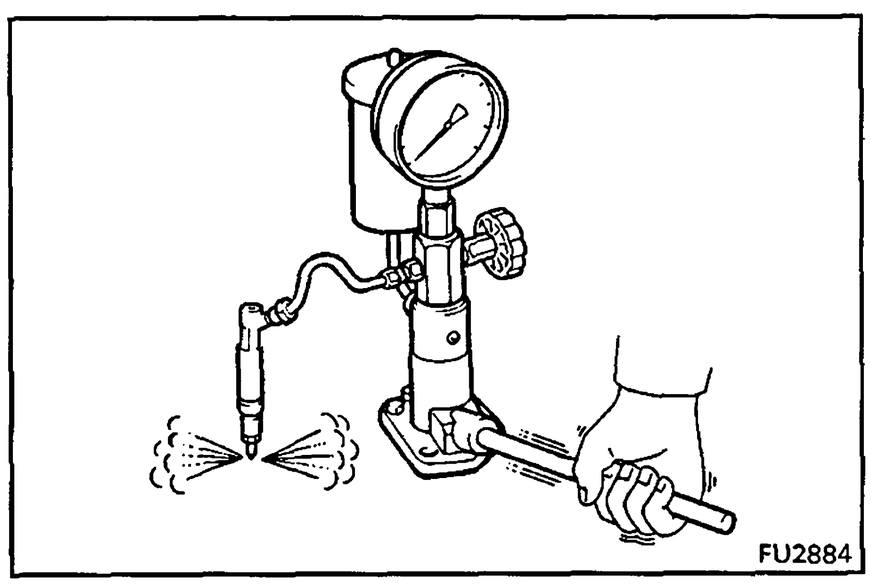

(f) Pump the tester handle slowly and observe the pressure gauge.

(g) Read the pressure gauge just as the injection pressure begins to drop.

No.2 opening pressure (Inspection pressure):
132 – 138 kg/cm^2
(1,877 – 1,963 psi, 12,945 – 13,533 kPa)

HINT: Proper nozzle operation can be determined by a swishing sound.

If the opening pressure is not as specified, replace the capsule sub-assembly.

HINT: The No.2 opening pressure is already adjusted for the new capsule sub-assembly.

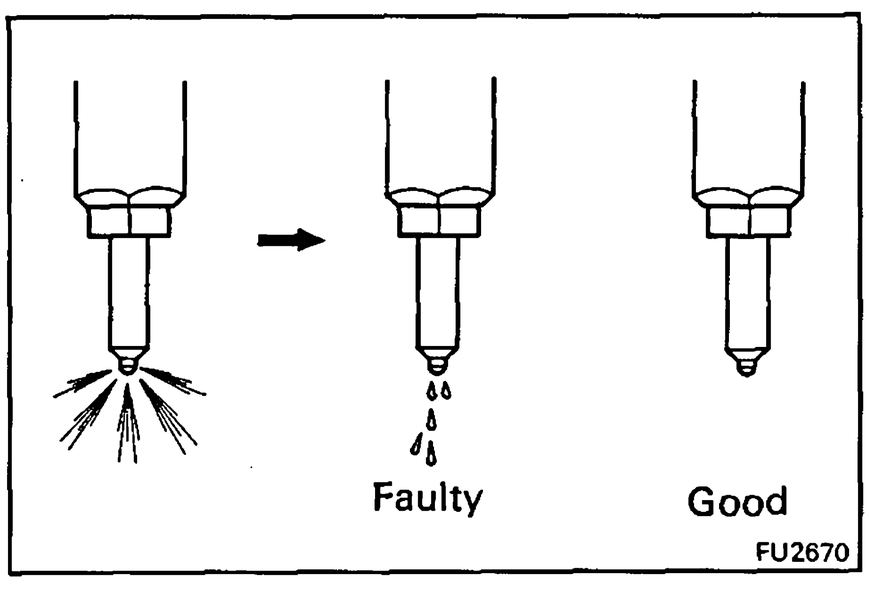

(h) There should be no dripping after injection.

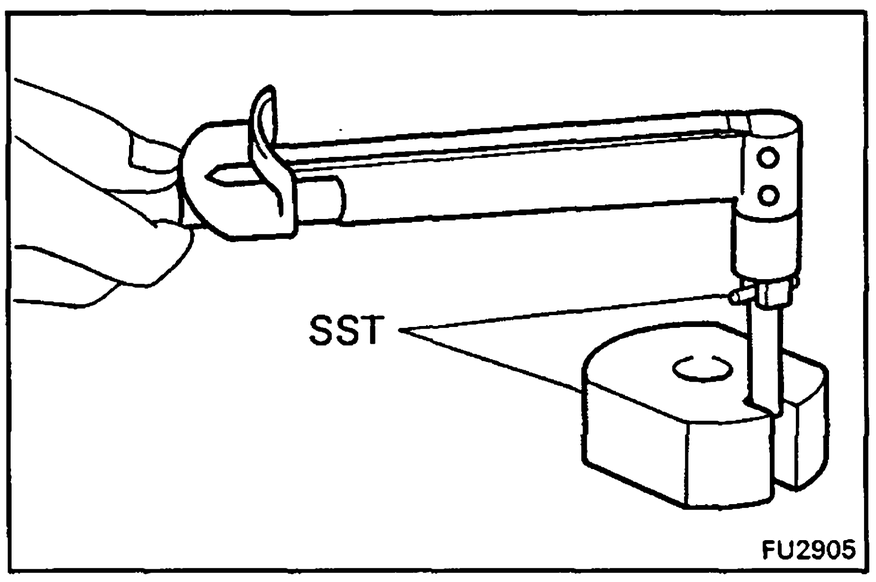

(i) After checking the No.2 opening pressure, remove the capsule sub-assembly and tighten the plug screw with SST.

SST 09268-17010

Torque: 25 kg-cm (21 in.-lb, 2.5 N·m)

3. ADJUST NO.1 OPENING PRESSURE

(a) Assemble the nozzle holder body, adjusting shim selected in step 1, the capsule sub- assembly, adjusting shim for adjustment of No.1 opening pressure, No.1 pressure spring, No.1 pressure pin, distance piece, straight pins and the nozzle sub-assembly, and finger tighten the retaining nut.

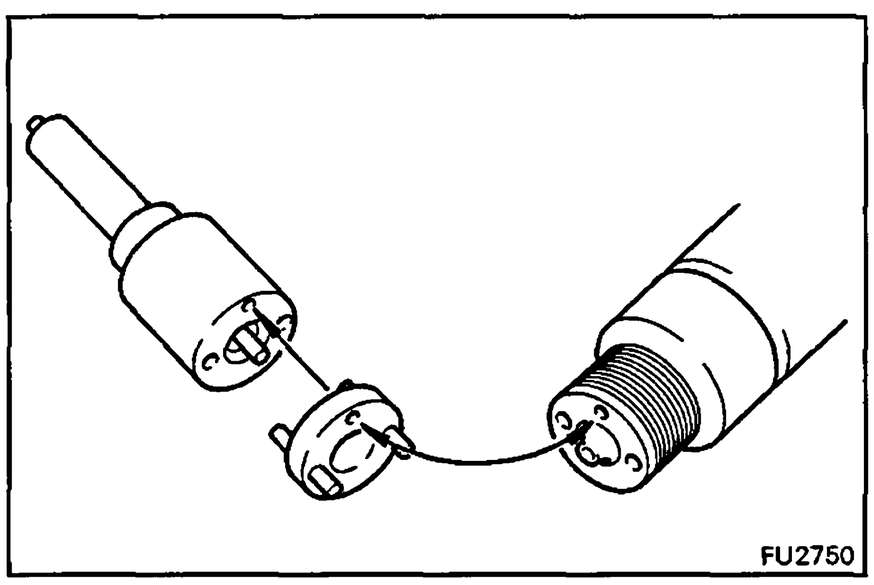

HINT:

- Align the holes of the nozzle body, distance piece and nozzle holder body.
- When the thickness of the originally used adjusting shim is not known, use a shim 1.5 mm (0.59 in.) thick instead.

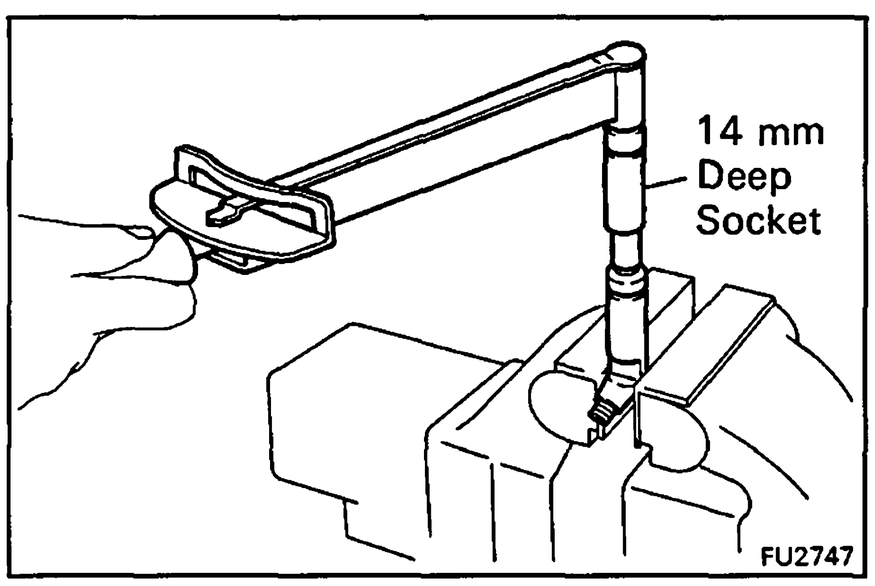

(b) Using a 14 mm deep socket wrench, torque the retaining nut.

Torque: 350 kg-cm (25 ft-lb, 34 N·m)

NOTICE: Over torquing could cause nozzle deformation and needle adhesion or other defects.

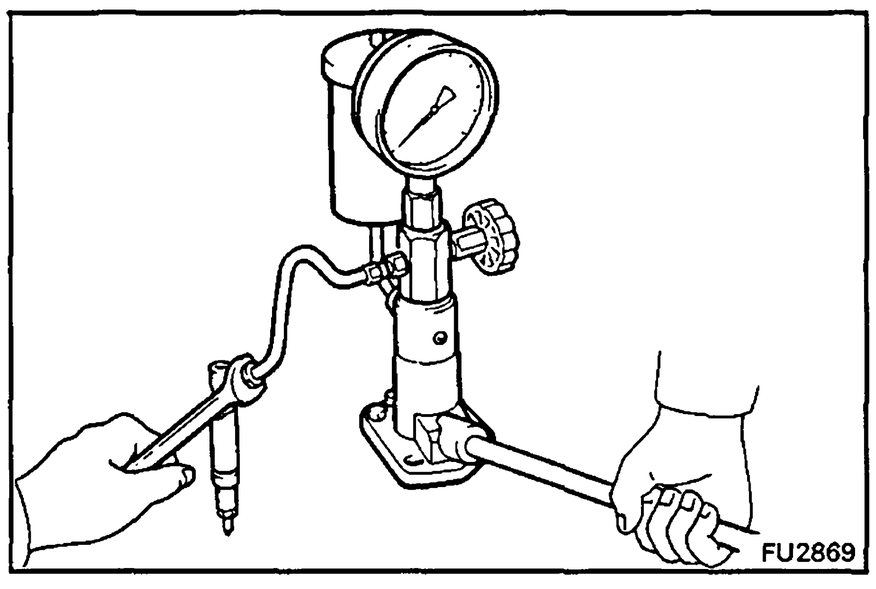

(c) Install the injection nozzle to the injection nozzle hand tester and bleed air from the union nut.

CAUTION: Do not place your finger over the nozzle injection hole.

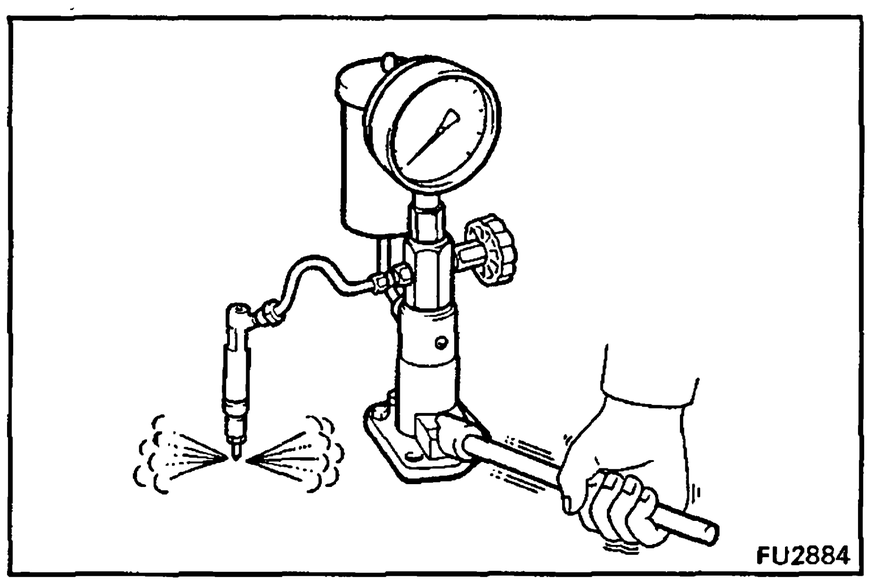

(d) Pump the tester handle slowly and observe the pressure gauge.

(e) Read the pressure gauge just as the injection pressure begins to drop.

No.1 opening pressure: 180 – 190 kg/cm^2 (2,560 – 2,702 psi) (17,652 – 18,633 kPa)

HINT: Proper nozzle operation can be determined by a swishing sound.

If the opening pressure is not as specified, disassemble the nozzle and change the adjusting shim on the top of the No.1 pressure spring.

Adjusting shim thickness mm (in.)		
0.700 (0.0276)	1.310 (0.0516)	1.520 (0.0598)
0.750 (0.0295)	1.320 (0.0520)	1.530 (0.0602)
0.800 (0.0315)	1.330 (0.0524)	1.540 (0.0606)
0.850 (0.0335)	1.340 (0.0528)	1.550 (0.0610)
0.900 (0.0354)	1.350 (0.0531)	1.560 (0.0614)
0.950 (0.0374)	1.360 (0.0535)	1.570 (0.0618)
0.975 (0.0384)	1.370 (0.0539)	1.580 (0.0622)
1.000 (0.0394)	1.380 (0.0543)	1.590 (0.0626)
1.025 (0.0404)	1.390 (0.0547)	1.600 (0.0630)
1.050 (0.0413)	1.400 (0.0551)	1.610 (0.0634)
1.075 (0.0423)	1.410 (0.0555)	1.620 (0.0638)
1.100 (0.0433)	1.420 (0.0559)	1.630 (0.0641)
1.125 (0.0443)	1.430 (0.0563)	1.640 (0.0646)
1.150 (0.0453)	1.440 (0.0567)	1.650 (0.0650)
1.175 (0.0463)	1.450 (0.0571)	1.660 (0.0654)
1.200 (0.0472)	1.460 (0.0575)	1.670 (0.0657)
1.225 (0.0482)	1.470 (0.0579)	1.680 (0.0661)
1.250 (0.0492)	1.480 (0.0583)	1.690 (0.0665)
1.280 (0.0504)	1.490 (0.0587)	1.700 (0.0669)
1.290 (0.0508)	1.500 (0.0591)	1.750 (0.0689)
1.300 (0.0512)	1.510 (0.0594)	1.800 (0.0709)

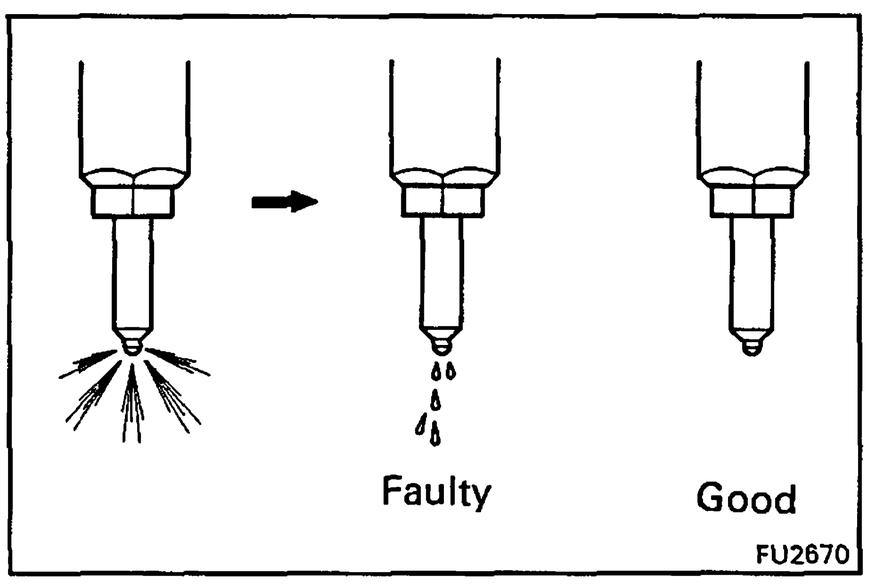

HINT:
- Varying the adjusting shim thickness by 0.01 mm (0.0004 in.) changes the injection pressure by about 1.5 kg/cm^2 (21 psi, 147 kPa).
- Only one adjusting shim should be used.

(f) There should be no dripping after injection.

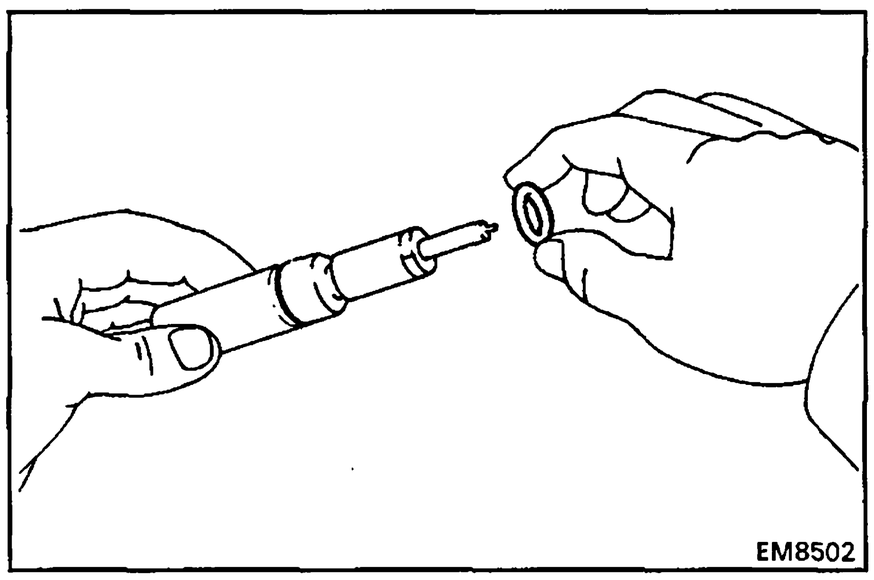

INSTALLATION OF INJECTION NOZZLES

(See page FU-17)

1. INSTALL INJECTION NOZZLES

(a) Install a new O-ring to the injection nozzle.

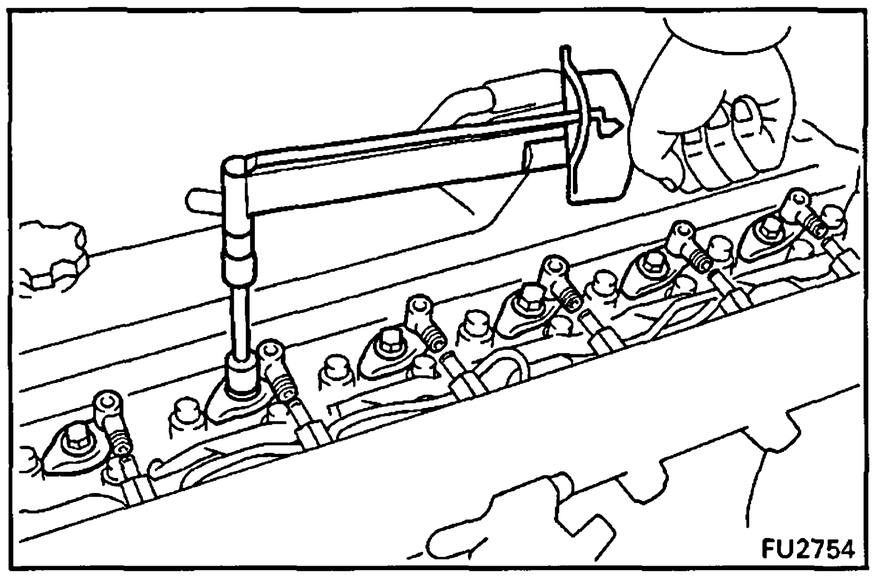

(b) Install new nozzle seats into the injection nozzle hole of the cylinder head.

(c) Install the injection nozzles with the washer, nozzle holder clamp and bolt.

Torque: 400 kg-cm (29 ft-lb, 39 N·m)

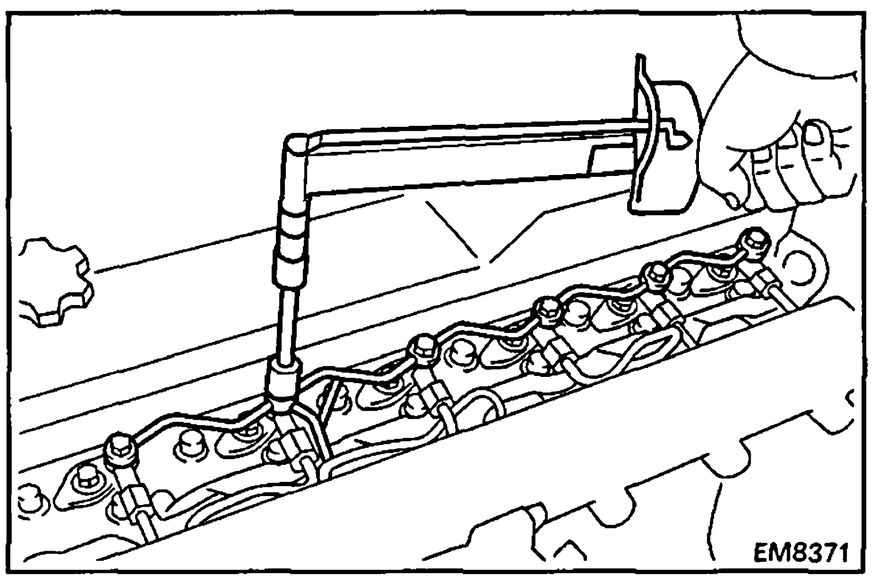

2. INSTALL NOZZLE LEAKAGE PIPE

(a) Install new gaskets and the leakage pipe with the hollow bolts.

Torque: 125 kg-cm (9 ft-lb, 12 N·m)

(b) Connect the fuel hose to the return pipe.

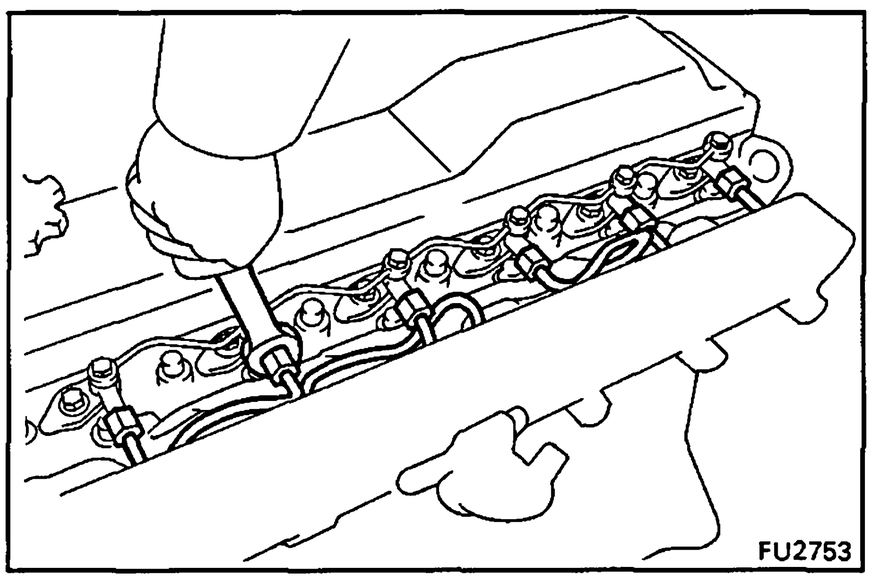

3. CONNECT INJECTION PIPES

Connect the injection pipes to injection nozzle.

Torque: 250 kg-cm (18 ft-lb, 25 N·m)

4. INSTALL INTAKE PIPE

(See step 3 on page EM-38)

5. START ENGINE AND CHECK FOR FUEL LEAKS

INJECTION PUMP

REMOVAL OF INJECTION PUMP

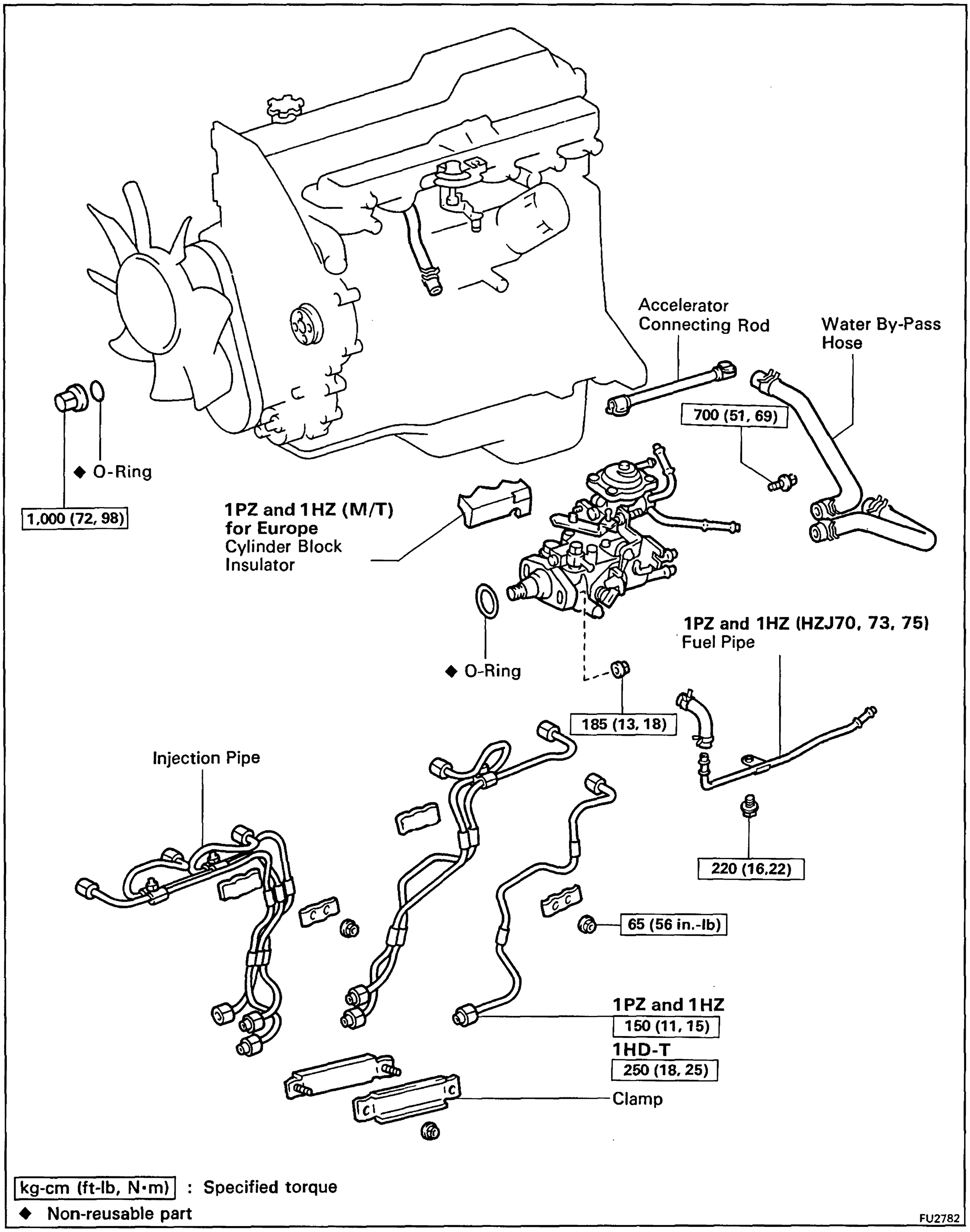

kg-cm (ft-lb, N•m) : Specified torque

◆ Non-reusable part

FU2782

1. (w/ ACSD)
   DRAIN COOLANT (See page CO-5)

2. REMOVE TIMING BELT
   (See steps 1 to 3 on pages EM-33 to 34)

3. REMOVE NO.2 CAMSHAFT TIMING PULLEY
   (See step 5 on pages EM-34)

4. DISCONNECT ACCELERATOR CONNECTING ROD

5. (A/T)
   DISCONNECT THROTTLE CABLE

6. (w/ A/C)
   DISCONNECT A/C IDLE-UP VACUUM HOSE

7. (w/ ACSD)
   DISCONNECT WATER BY-PASS HOSES FROM THERMO WAX

8. DISCONNECT INJECTION PUMP CONNECTOR

9. DISCONNECT FUEL HOSES FROM INJECTION PUMP

10. (1HD-T)
    DISCONNECT BOOST COMPENSATOR HOSE

11. (w/ PCS)
    DISCONNECT PCS VACUUM HOSE

12. (w/ BACS)
    DISCONNECT BACS VACUUM HOSE

13. REMOVE INJECTION PIPES
    (See step 2 on page FU-9)

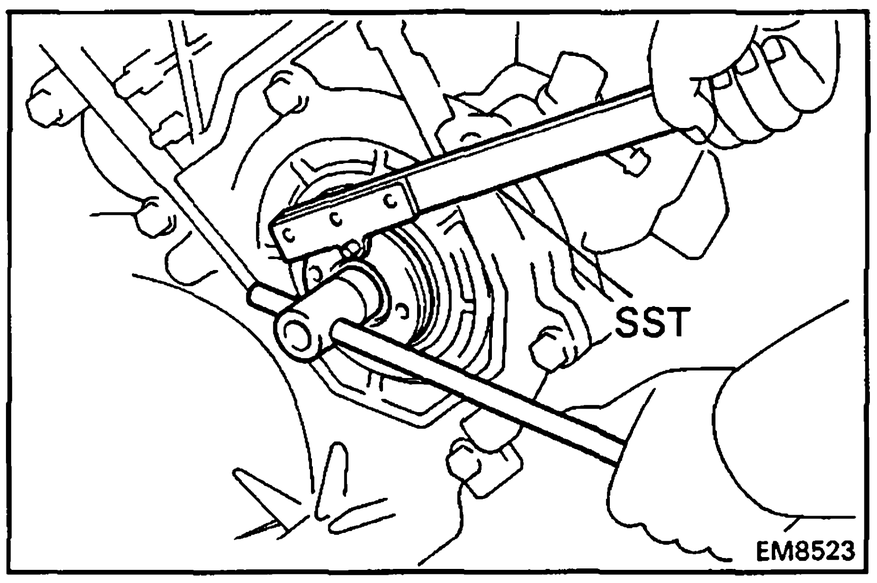

14. REMOVE INJECTION PUMP
    (a) Using SST, remove the injection pump drive gear set nut.

    SST 09330-00021

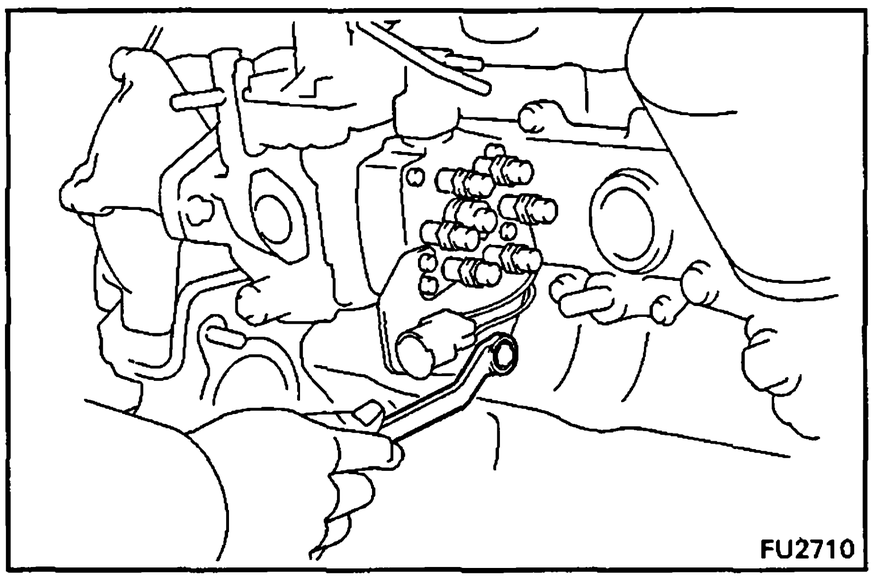

    (b) Remove the bolt holding the injection pump to pump stay.

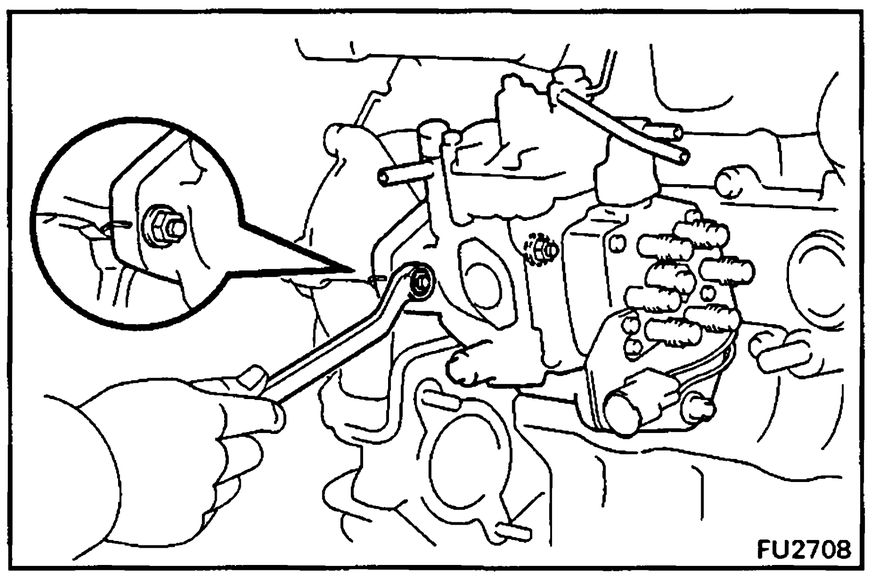

(c) Before removing the injection pump, check if the period lines are aligned.

If not, place new matchmarks for reinstallation.

(d) Remove the two nuts holding the injection pump to the timing gear case.

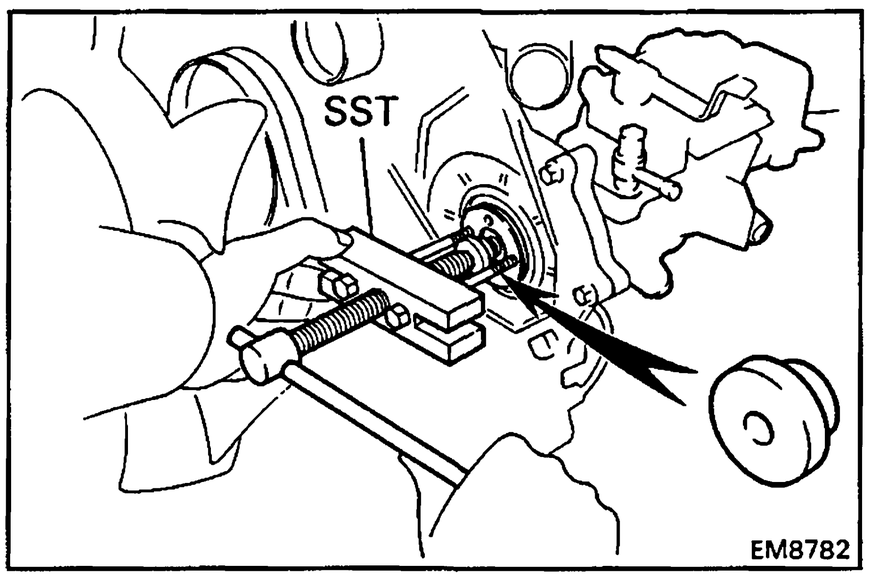

(e) Using SST, remove the injection pump.

SST 09213-60017 (09213-00020, 09213-00030, 09213-00060) and 09950-20017

NOTICE:

- **Tighten the two bolts more than 8 mm (0.31 in.).**
- **Set SST so that it is balanced.**
- **Do not hold or carry the injection pump by the adjusting lever.**
- **Do not put the injection pump (with HAC, or for the 1HD-T) at an angle more than 45° from the horizontal.**

(f) Remove the cylinder block insulator (1PZ and 1HZ (M/T) for Europe).

(g) Remove the O-ring from the injection pump.

COMPONENTS

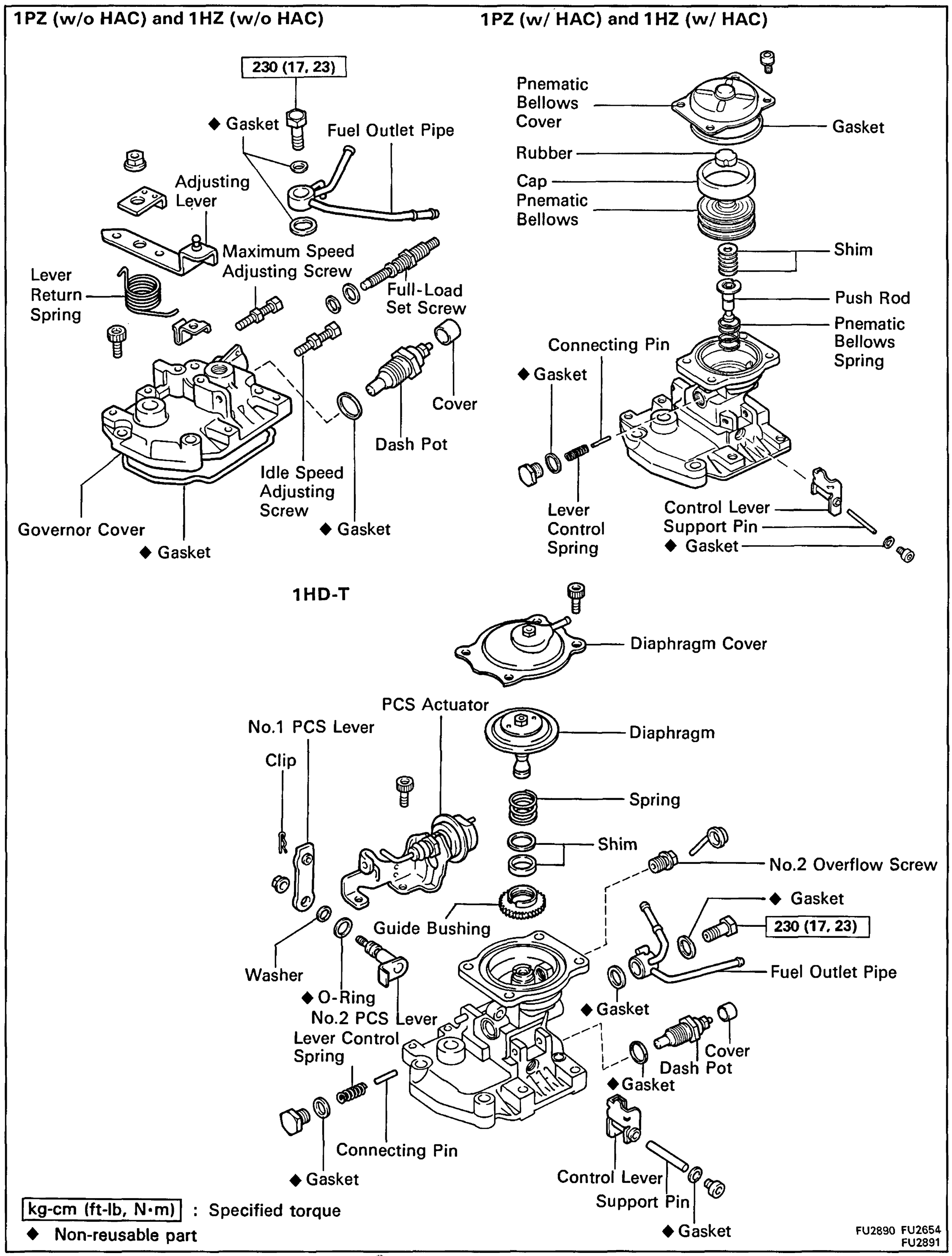
1PZ (w/o HAC) and 1HZ (w/o HAC)
230 (17, 23)
◆ Gasket
Fuel Outlet Pipe
Adjusting Lever
Maximum Speed Adjusting Screw
Lever Return Spring
Full-Load Set Screw
Cover
Dash Pot
Idle Speed Adjusting Screw
Governor Cover
◆ Gasket
◆ Gasket
1PZ (w/ HAC) and 1HZ (w/ HAC)
Pnematic Bellows Cover
Gasket
Rubber
Cap
Pnematic Bellows
Shim
Push Rod
Pnematic Bellows Spring
Connecting Pin
◆ Gasket
Lever Control Spring
Control Lever Support Pin
◆ Gasket
1HD-T
Diaphragm Cover
PCS Actuator
No.1 PCS Lever
Diaphragm
Clip
Spring
Shim
No.2 Overflow Screw
◆ Gasket
230 (17, 23)
Guide Bushing
Washer
Fuel Outlet Pipe
◆ O-Ring
No.2 PCS Lever
◆ Gasket
Lever Control Spring
Cover
Dash Pot
◆ Gasket
Connecting Pin
◆ Gasket
Control Lever Support Pin
◆ Gasket
kg-cm (ft-lb, N·m) : Specified torque
◆ Non-reusable part
FU2890 FU2654 FU2891

COMPONENTS (Cont'd)

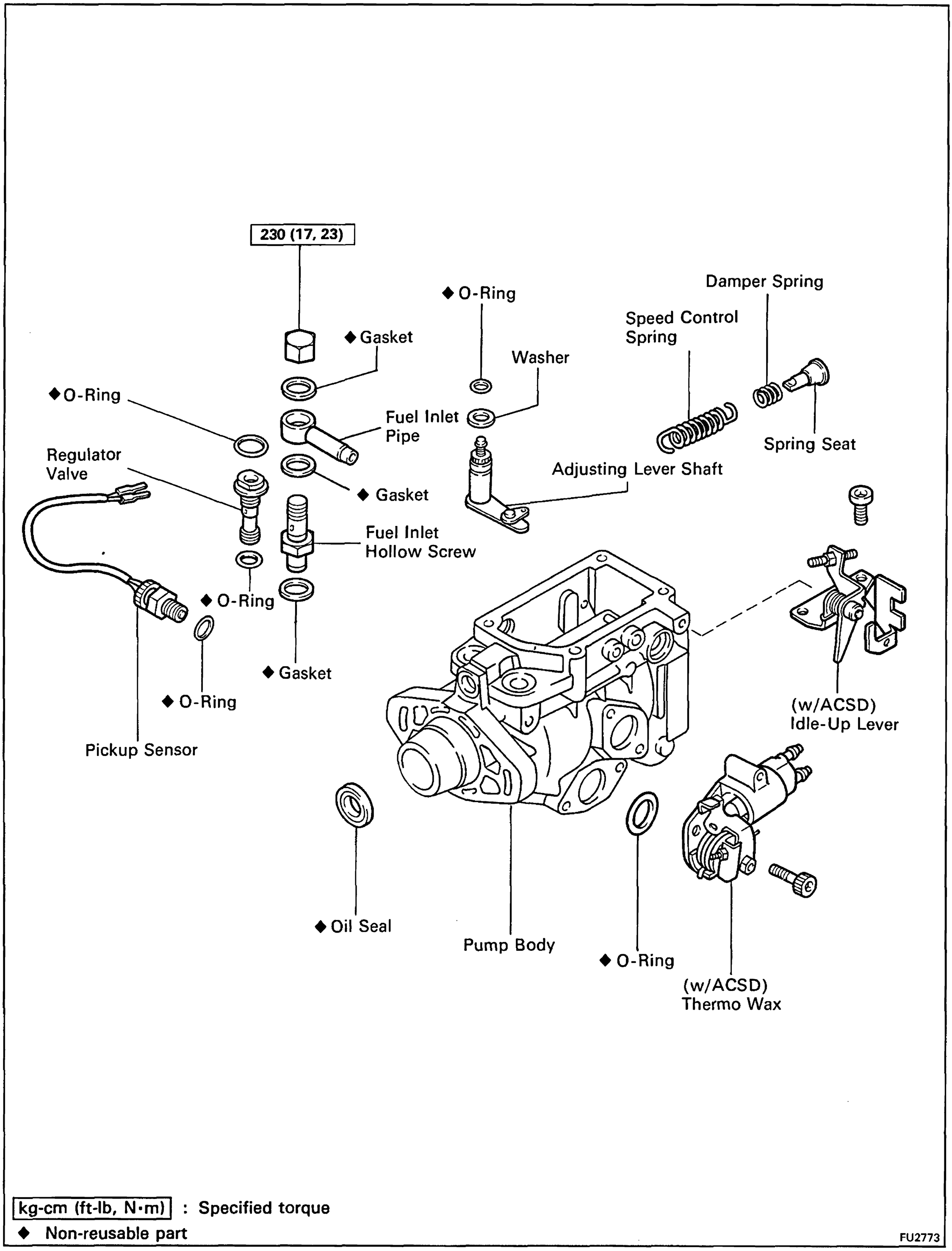

kg-cm (ft-lb, N·m) : Specified torque

◆ Non-reusable part

FU2773

COMPONENTS (Cont'd)

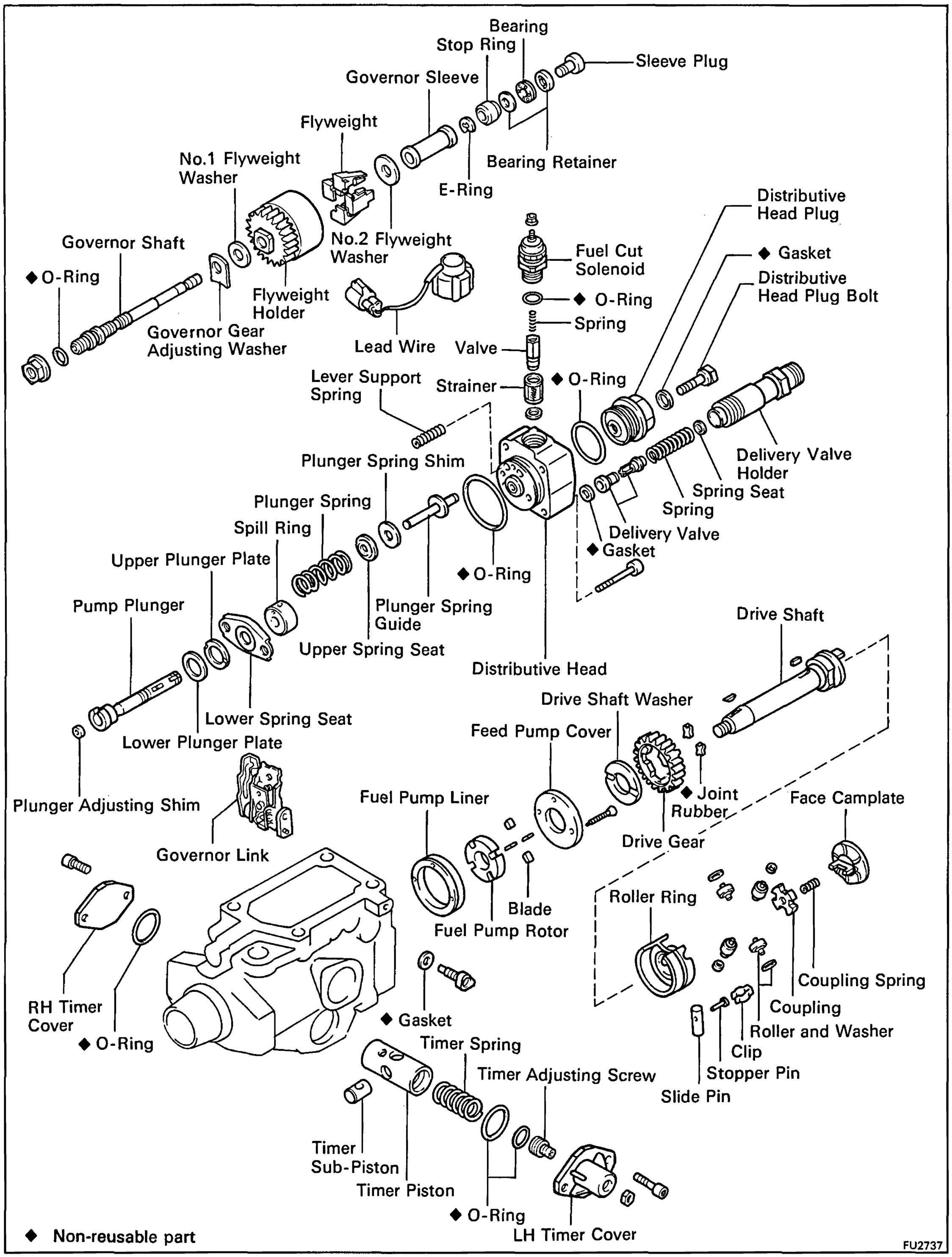

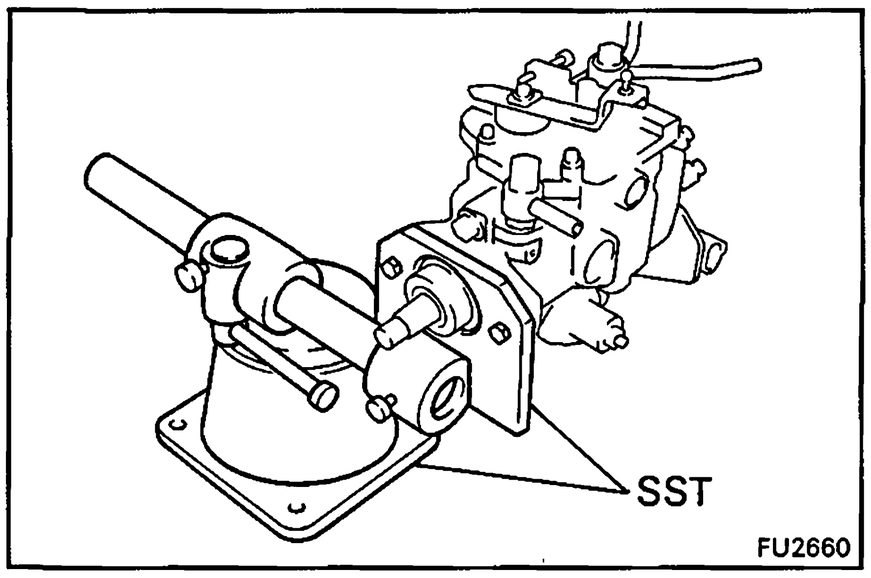

DISASSEMBLY OF INJECTION PUMP

(See pages FU-30, 31 and 32)

1. MOUNT PUMP ASSEMBLY TO SST (STAND)

SST 09241-76022 and 09245-54010

2. REMOVE SET KEY OF DRIVE PULLEY FROM DRIVE SHAFT

3. (w/ A/C)
REMOVE IDLE-UP ACTUATOR

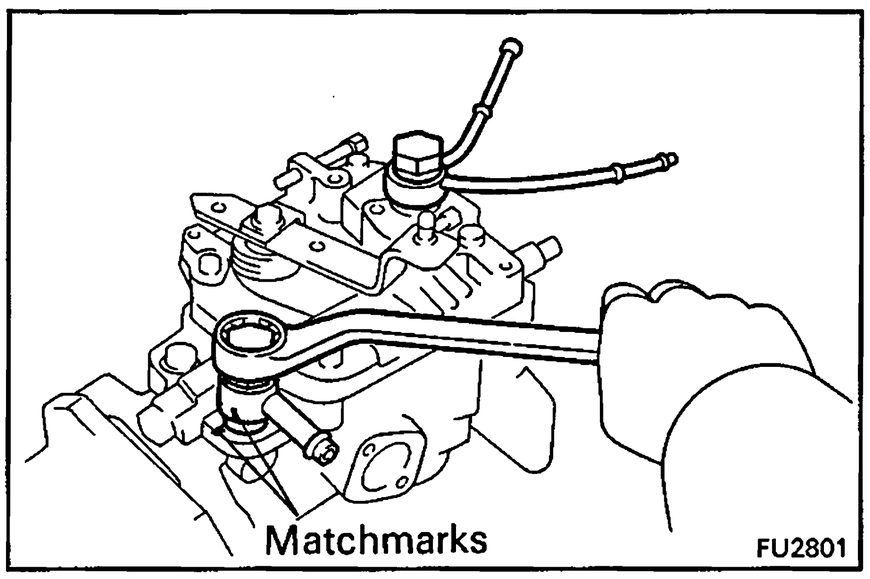

4. REMOVE TWO FUEL PIPES

Place the matchmarks on the fuel inlet pipe and governor cover.

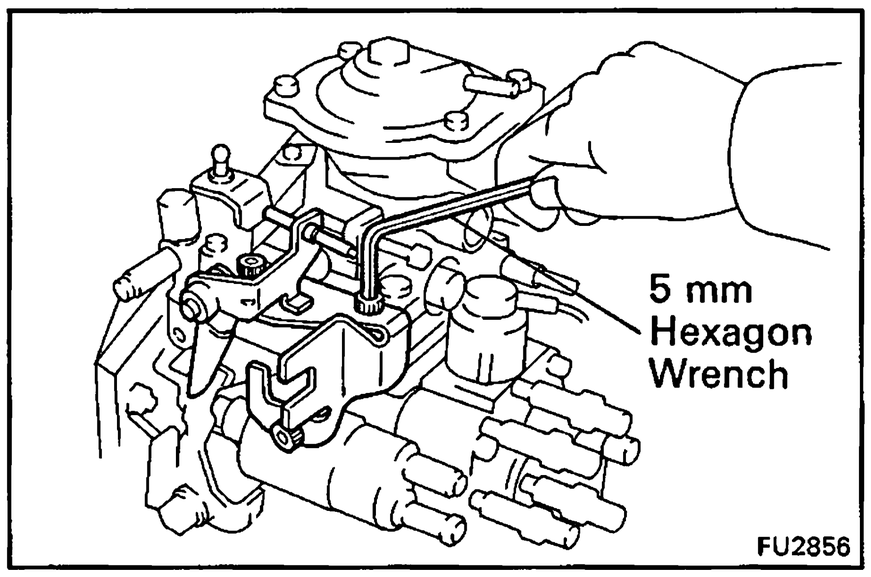

5. (w/ ACSD)
REMOVE IDLE-UP LEVER

Using a 5 mm hexagon wrench, remove the three bolts and idle-up lever.

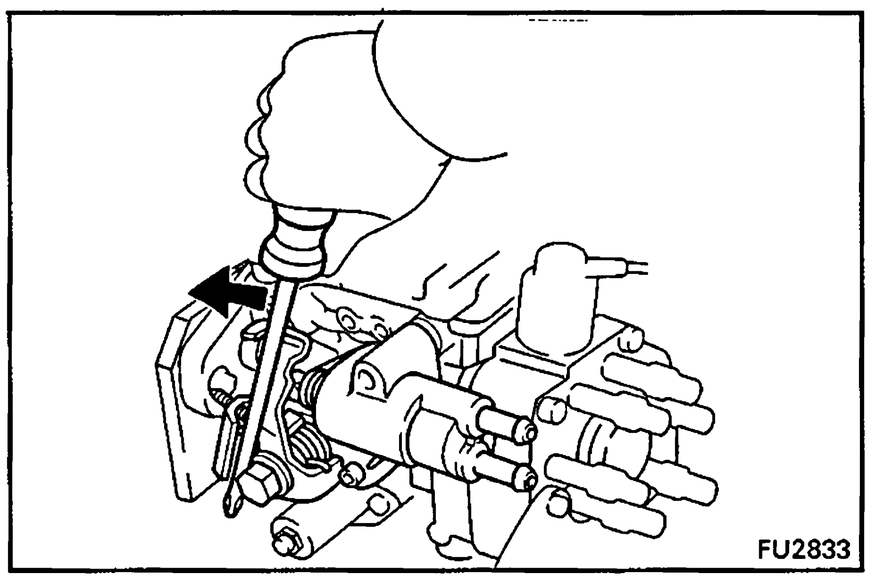

6. (w/ ACSD)
REMOVE THERMO WAX

(a) Using a screwdriver, turn the cold starting lever counterclockwise approx. 20°.

(b) Put a metal plate (thickness of 3.5 – 7.5 mm) (0.138 – 0.295 in.) between the cold starting lever and thermo wax plunger.

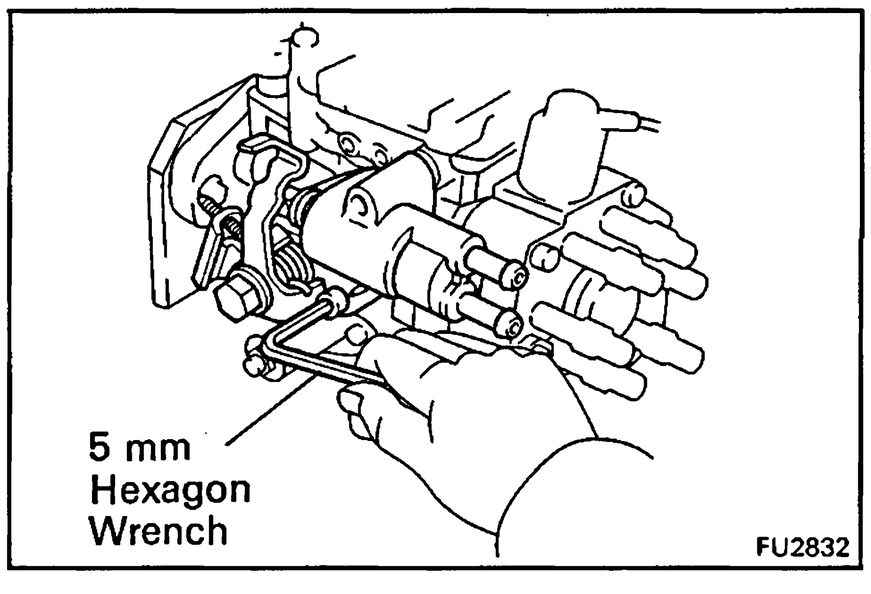

(c) Using a 5 mm hexagon wrench, remove the two bolts, thermo wax and O-ring.

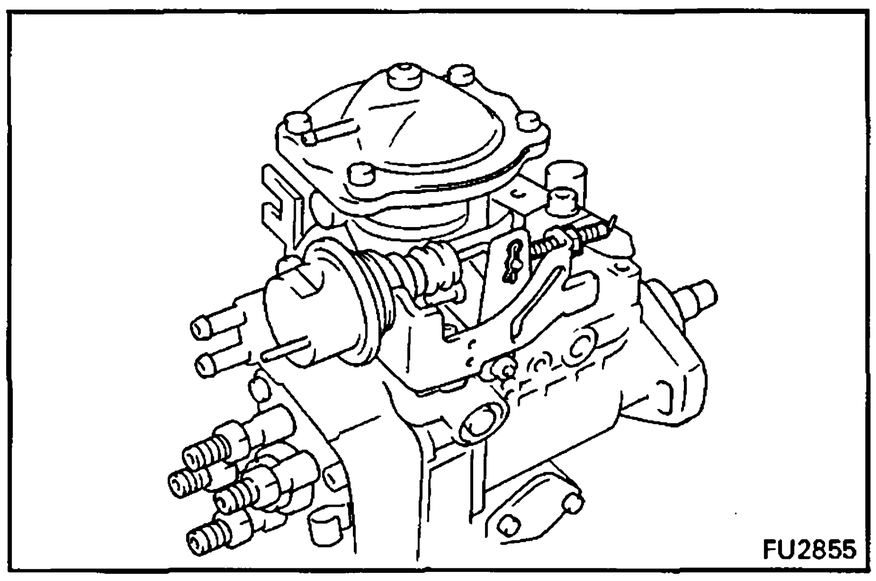

7. **(w/ PCS)**
REMOVE PCS ACTUATOR
   (a) Remove the PCS adjusting screw.
   (b) Remove the clip.

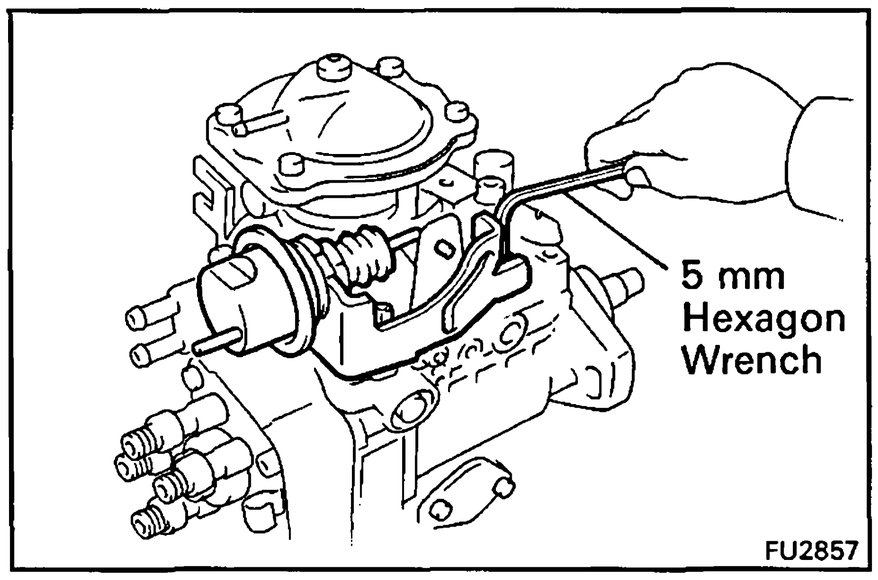

   (c) Using a 5 mm hexagon wrench, remove the two bolts and PCS actuator assembly.

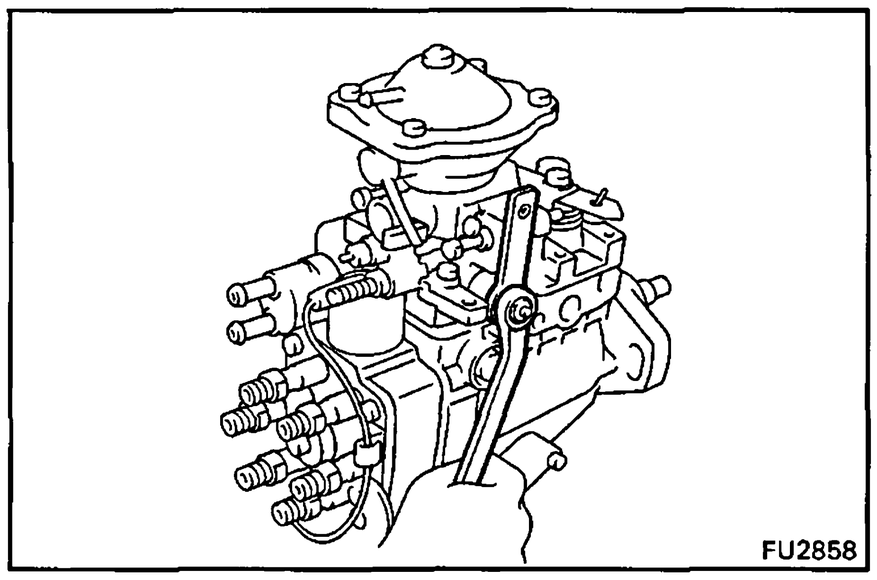

8. **(w/ PCS)**
REMOVE NO.1 PCS LEVER
Remove the nut and No.1 PCS lever.

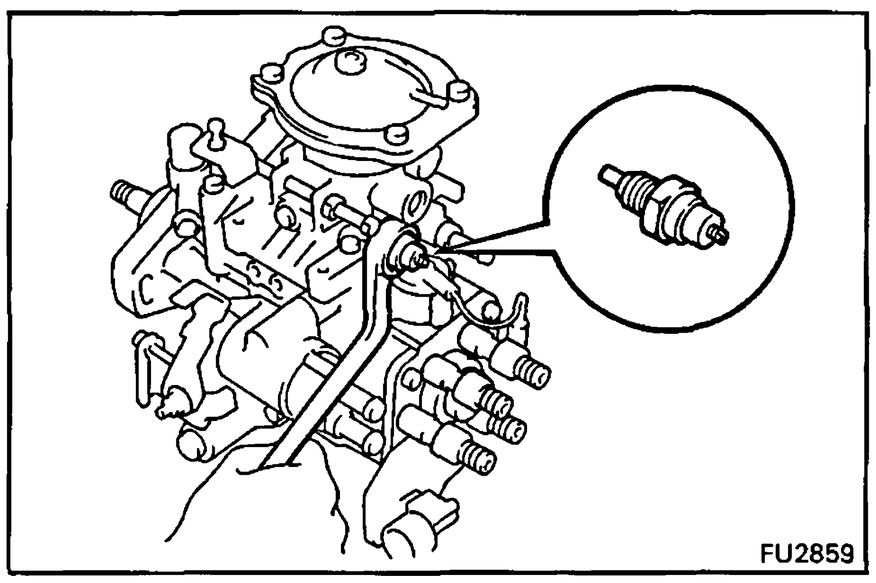

9. **(w/ Dash Pot)**
REMOVE DASH POT
Remove the dash pot and gasket.

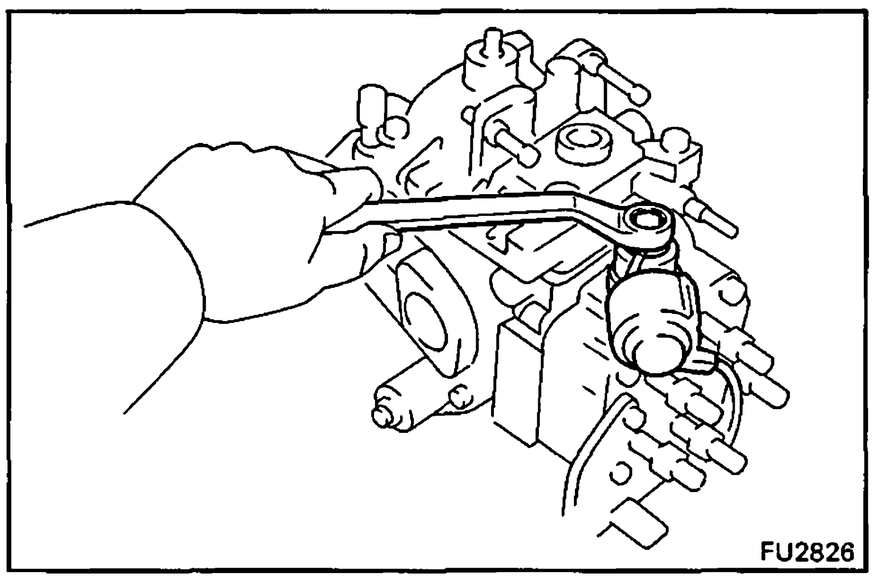

10. **REMOVE FUEL CUT SOLENOID**
   (a) Disconnect the lead wire connector from the bracket.
   (b) Disconnect the dust cover from the fuel cut solenoid.
   (c) Remove the nut, lead wire and dust cover.

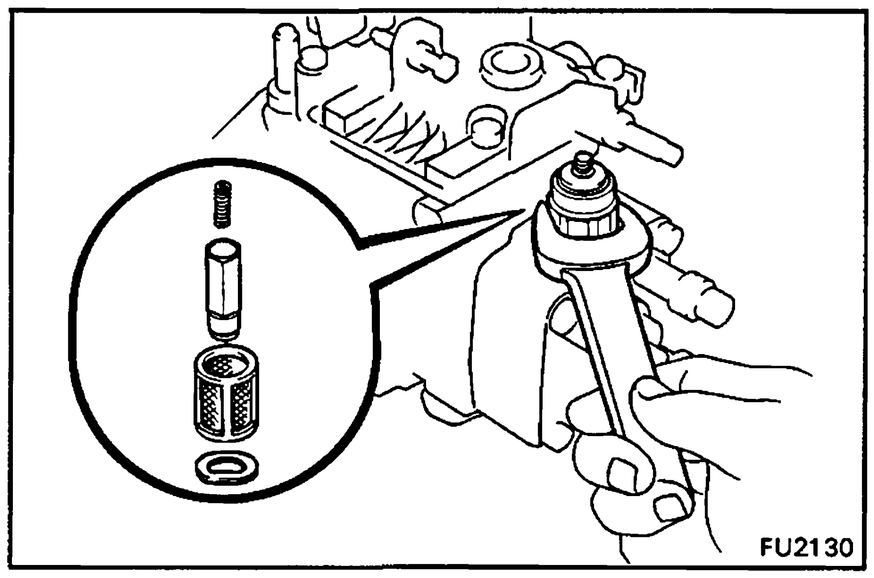

(d) Remove the fuel cut solenoid, O-ring, spring, valve, strainer and wave washer.

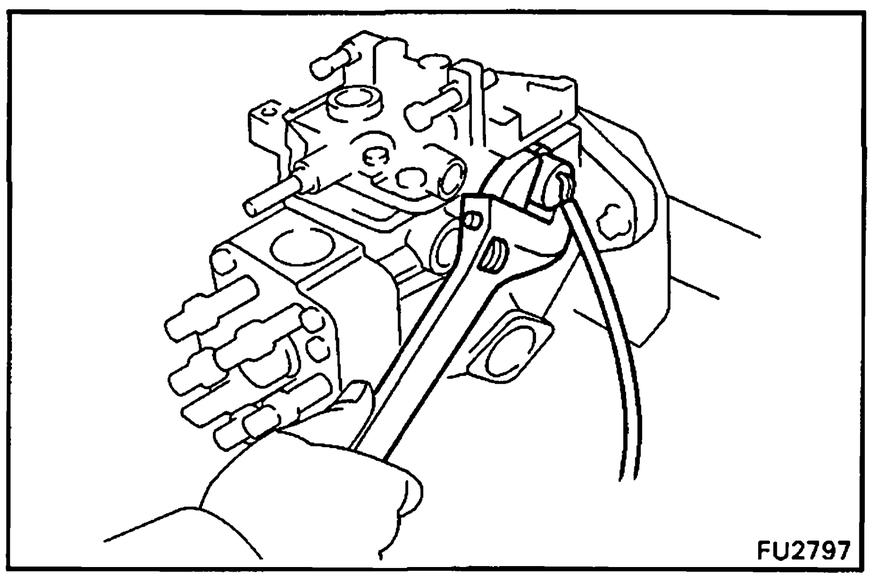

11. (w/ TACHOMETER) REMOVE PICKUP SENSOR

Remove the pickup sensor and O-ring.

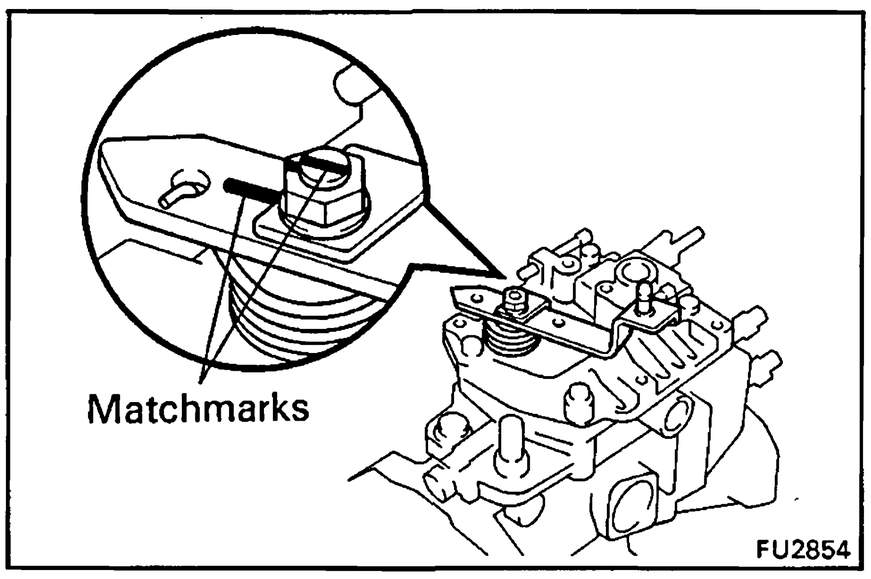

12. REMOVE ADJUSTING LEVER

(a) Place the matchmarks on adjusting lever and shaft.

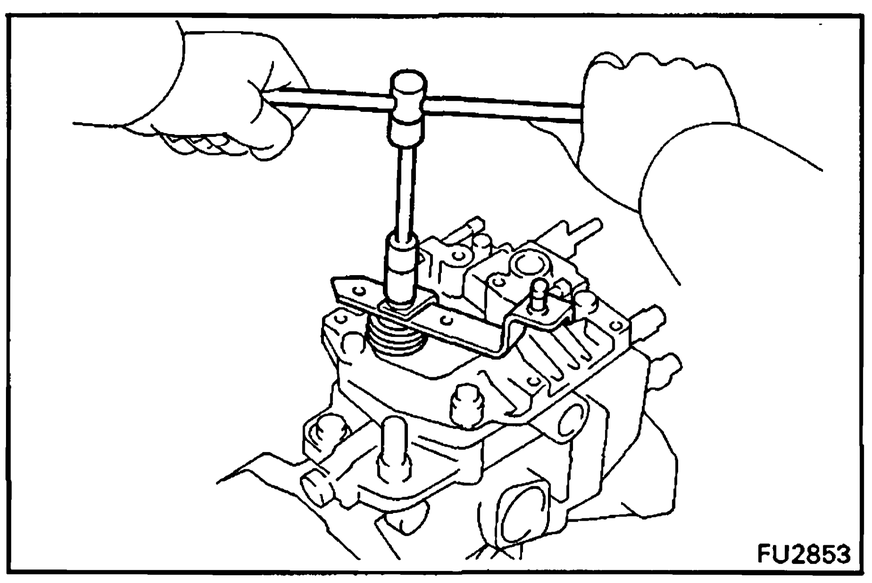

(b) Remove the nut, return spring guide, adjusting lever and return spring.

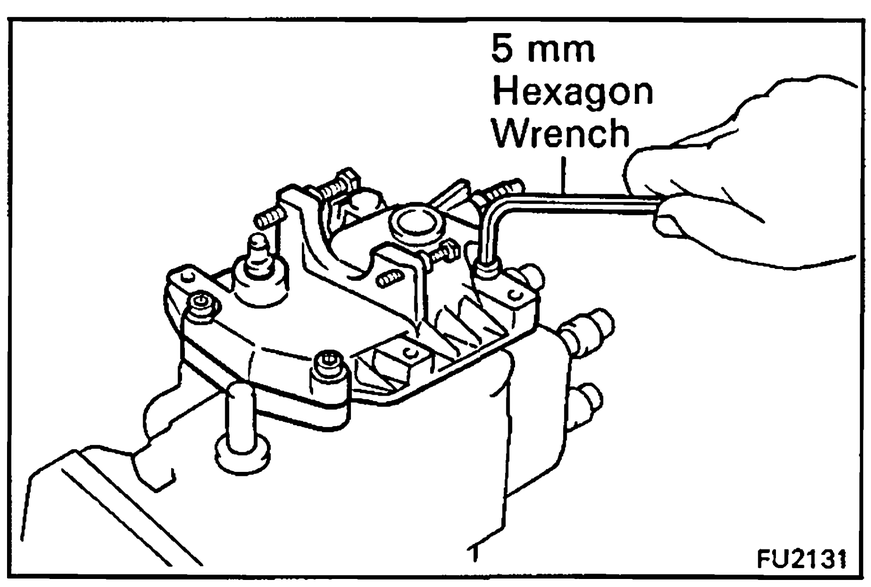

13. REMOVE GOVERNOR COVER

(a) (w/ HAC and 1HD-T)
Remove the idle speed adjusting screw.

(b) Using a 5 mm hexagon wrench, remove the four bolts.

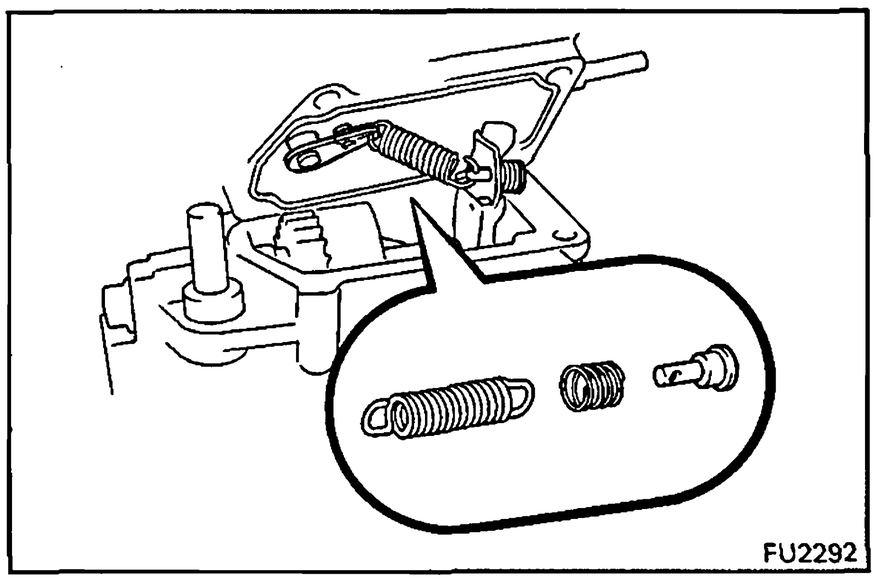

(c) Disconnect the speed control spring from the spring seat, and remove the spring seat, damper spring, speed control spring, the governor cover and adjusting lever shaft assembly and gasket.

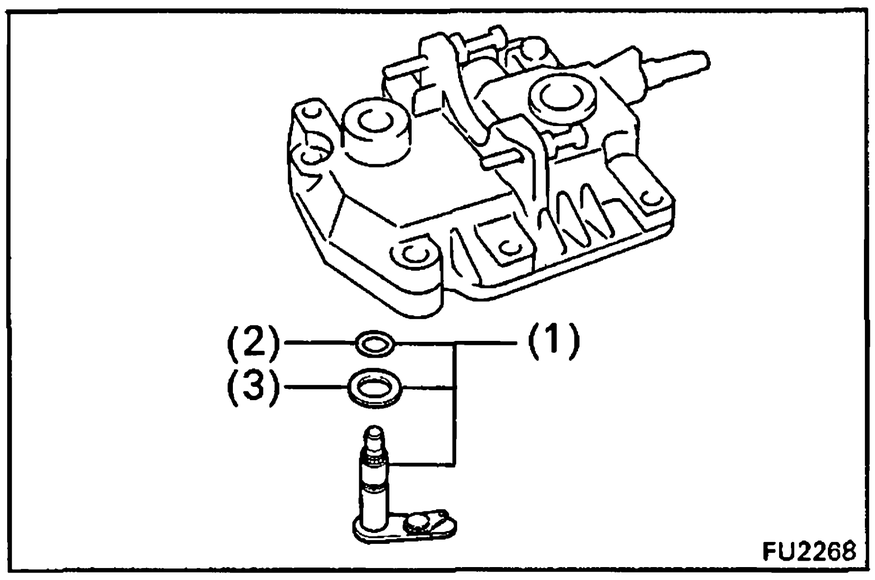

14. REMOVE GOVERNOR ADJUSTING LEVER SHAFT FROM GOVERNOR COVER

Remove the following parts from the governor cover.

(1) Adjusting lever shaft, O-ring and washer assembly

(2) O-ring

(3) Washer

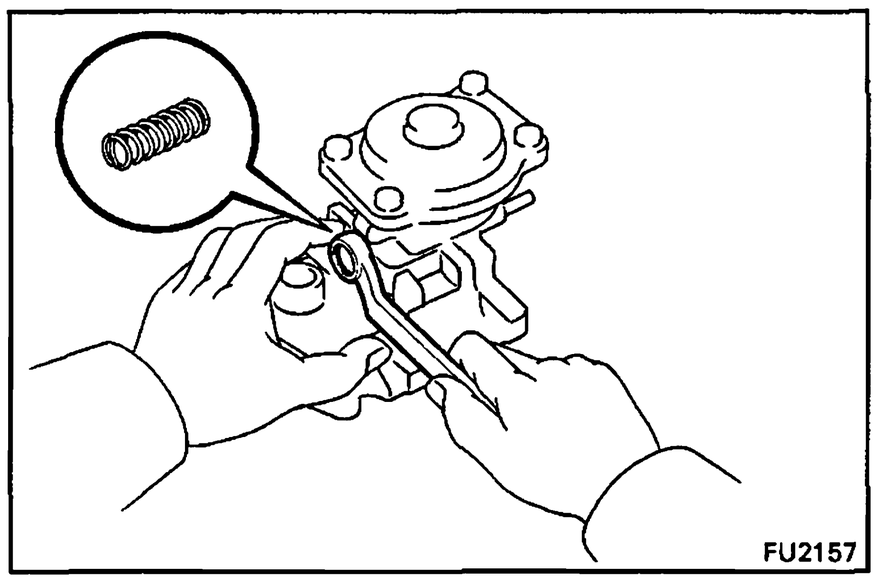

15. (1PZ (w/ HAC) and 1HZ (w/ HAC)) DISASSEMBLE HIGH ALTITUDE COMPENSATOR

A. Remove lever control spring

Remove the bolt, gasket and lever control spring.

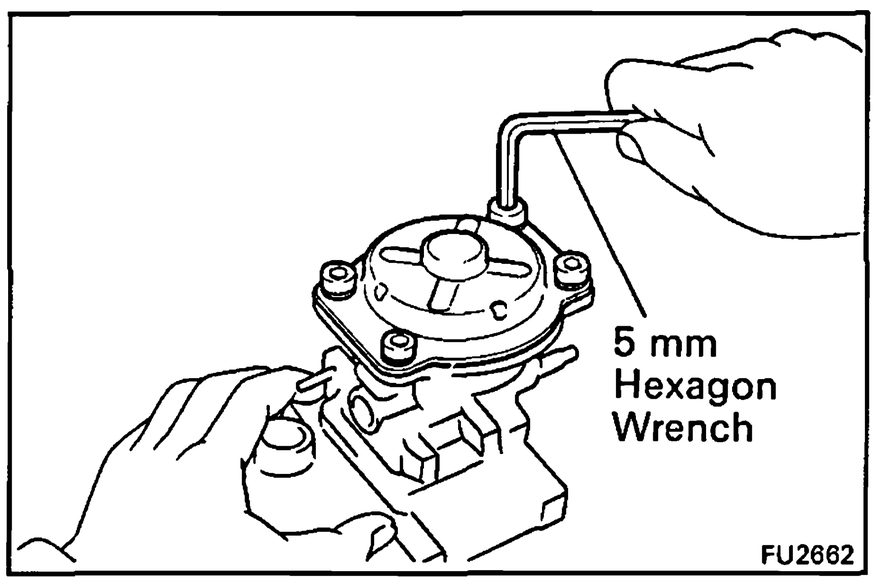

B. Remove pneumatic bellows

(a) Using a 5 mm hexagon wrench, remove the four bolts.

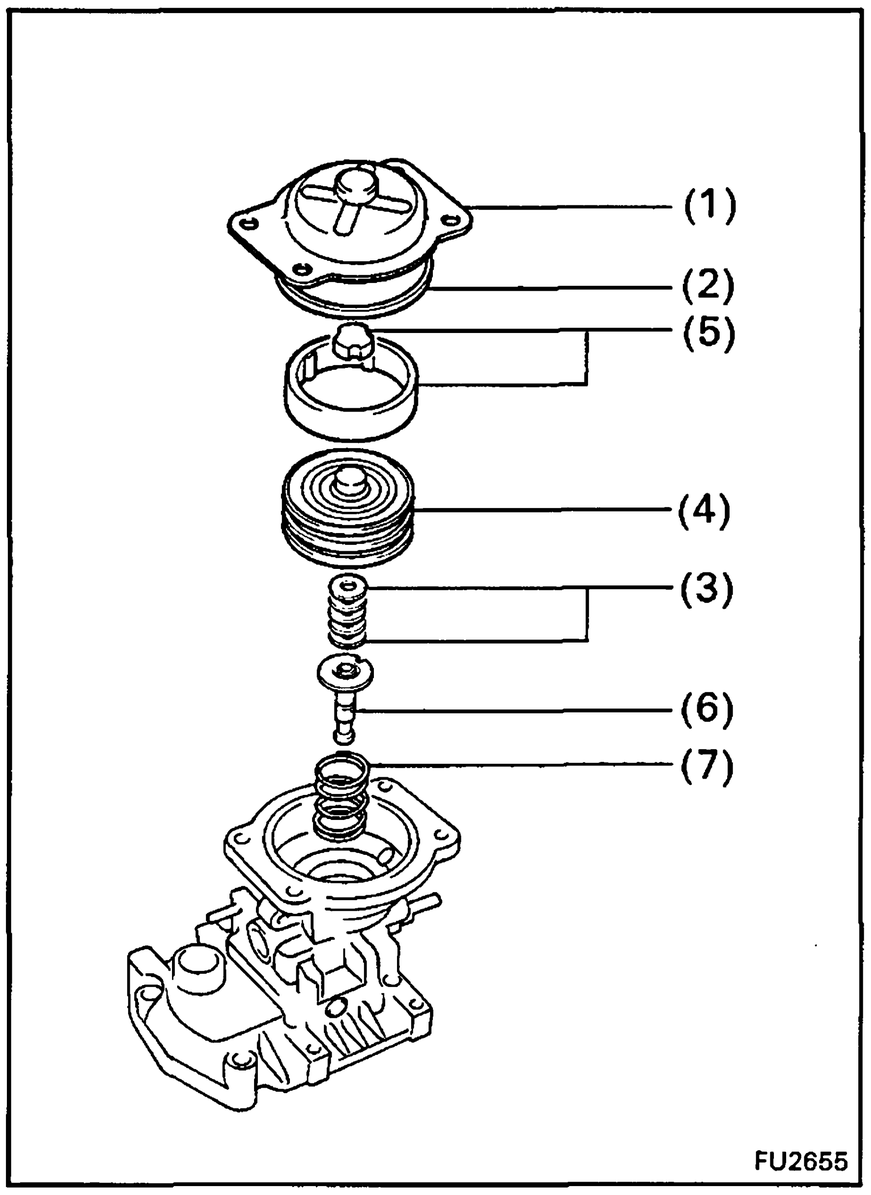

(b) Remove the following parts:

(1) Pneumatic bellows cover

(2) Gasket

(3) Shims

NOTICE: Note the number of the shims.

(4) Pneumatic bellows

(5) Two rubber caps

(6) Push rod

(7) Pneumatic bellows spring

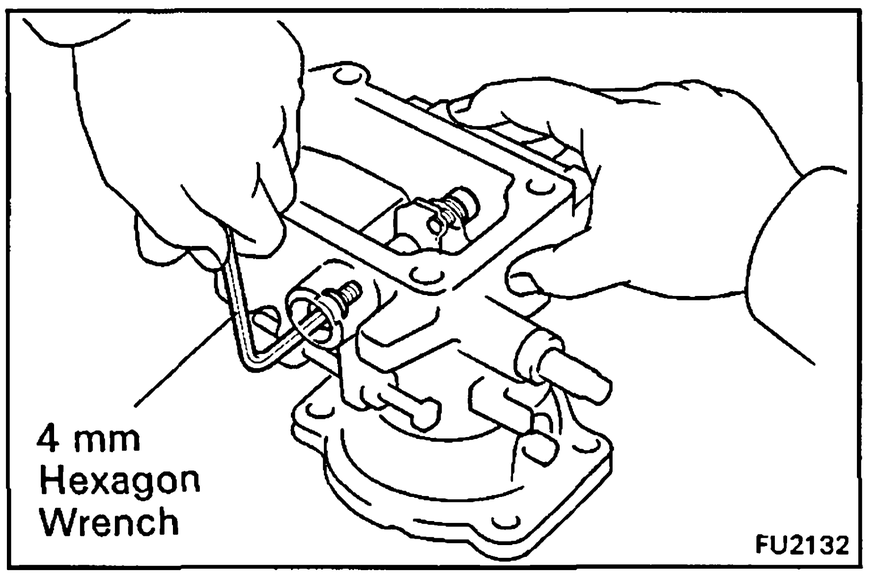

C. Remove control lever

(a) Using a 4 mm hexagon wrench, remove the two bolts and gaskets.

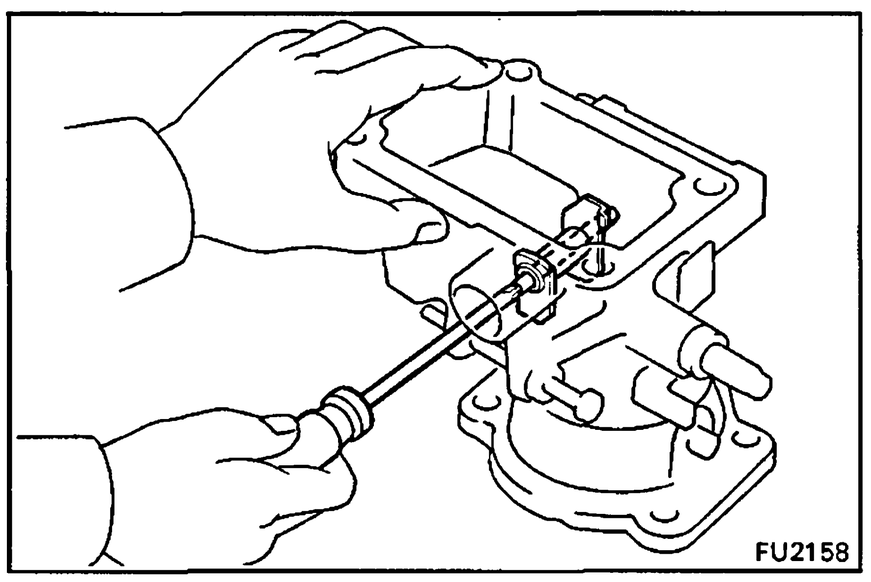

(b) Using a small screwdriver, push out the support pin and remove the control lever.

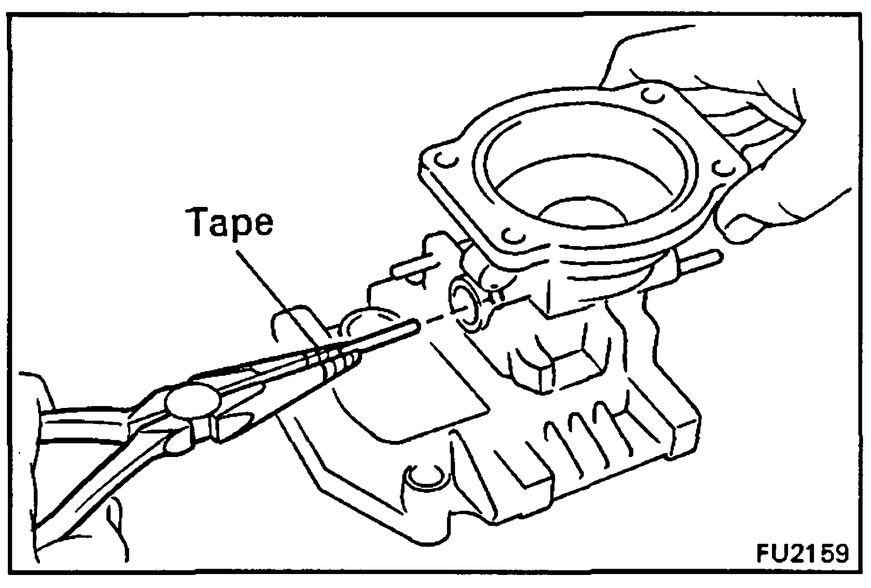

(c) Using needle nose pliers, remove the connecting pin.

NOTICE: Be careful not to damage the connecting. Tape the tip of the pliers.

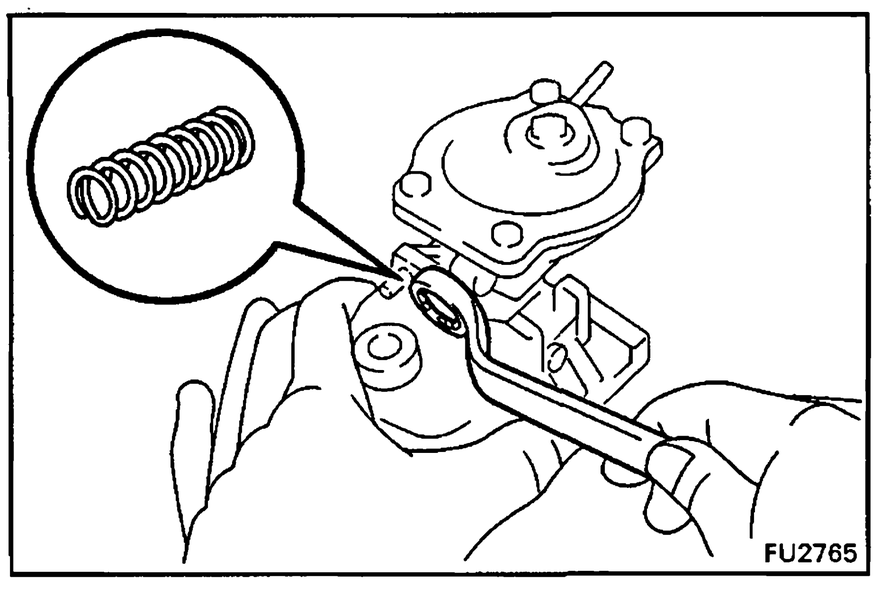

16. (1HD-T) DISASSEMBLE BOOST COMPENSATOR

A. Remove lever control spring

Remove the bolt, gasket and lever control spring.

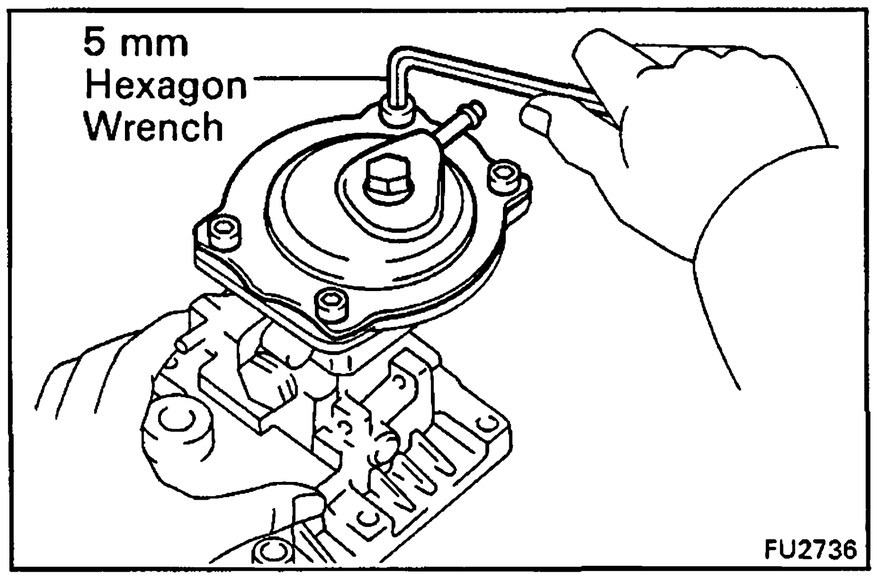

B. Remove boost compensator diaphragm

(a) Using a 5 mm hexagon wrench, remove the four bolts.

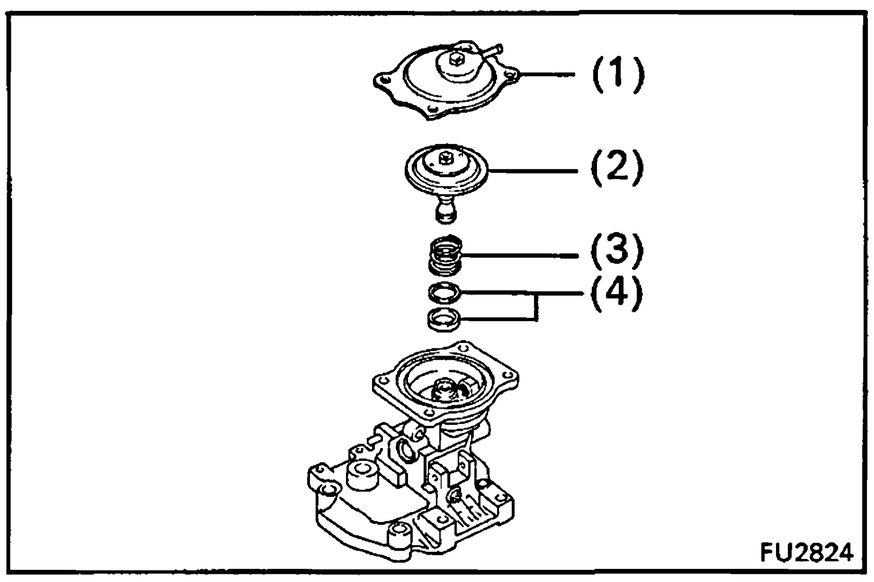

(b) Remove the following parts:
- (1) Diaphragm cover
- (2) Diaphragm
- (3) Spring
- (4) Boost compensator shim

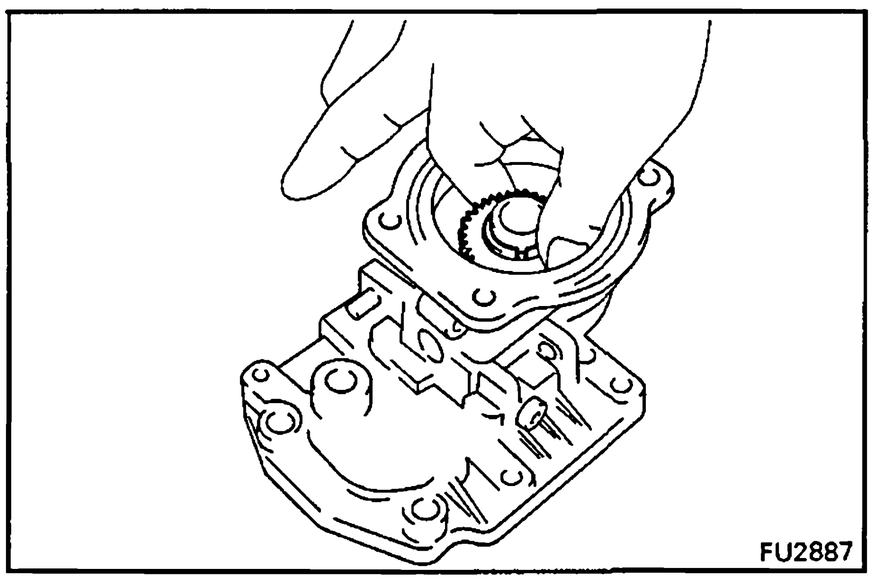

C. Remove guide bushing

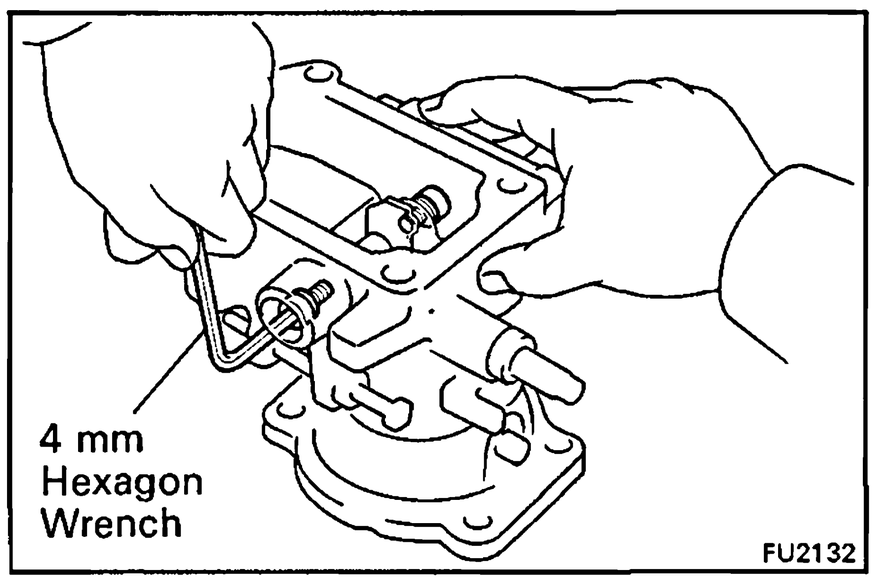

D. Remove control lever

(a) Using a 4 mm hexagon wrench, remove the two bolts and gaskets.

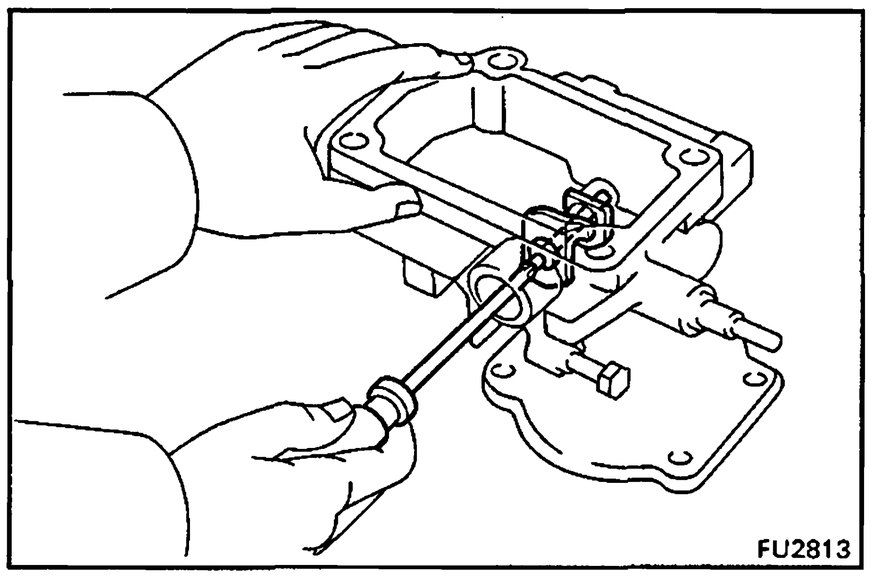

(b) Using a small screwdriver, push out the support pin and remove the control lever.

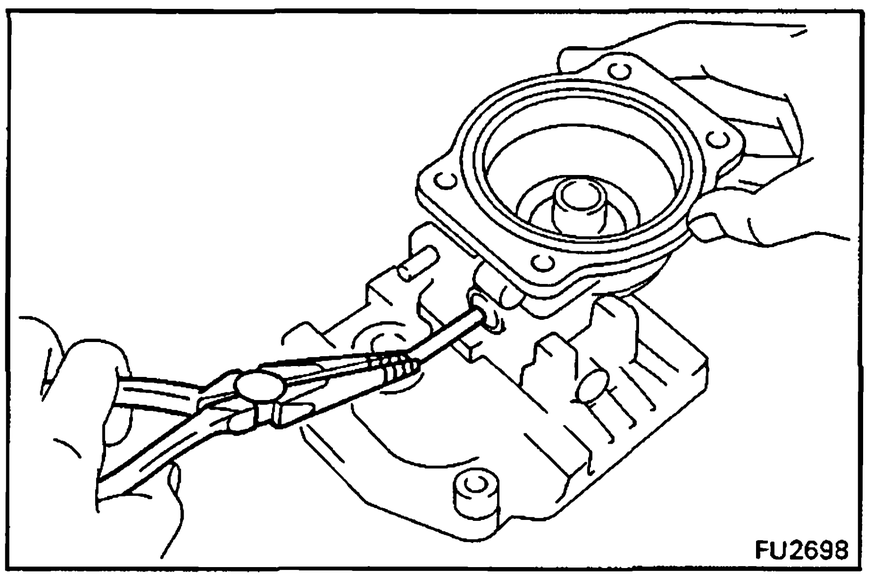

(c) Using needle nose pliers, remove the connecting pin.

NOTICE: Be careful not to damage the connecting pin. Tape the tip of the pliers.

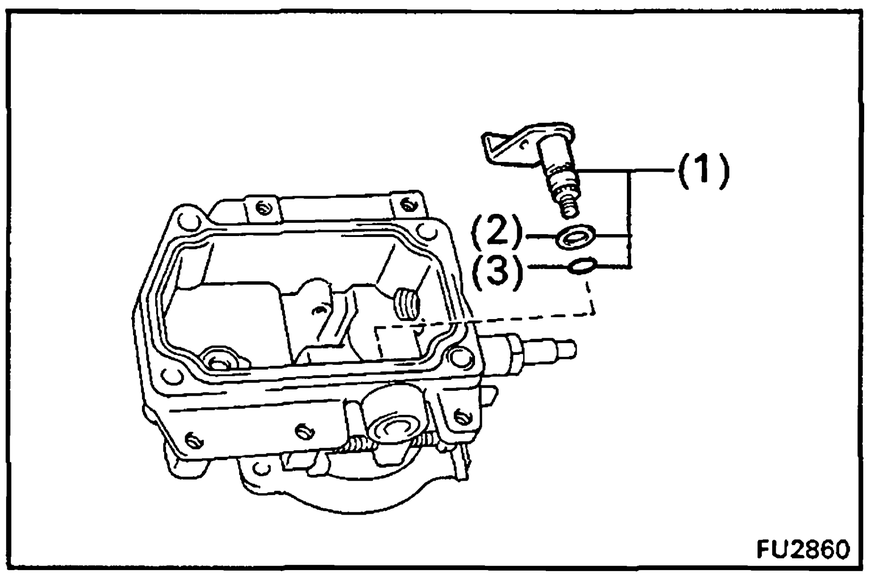

E. Remove No.2 PCS lever

Remove the following pars from the the governor cover.

(1) No.2 lever, O-ring and washer assembly
(2) O-ring
(3) Washer

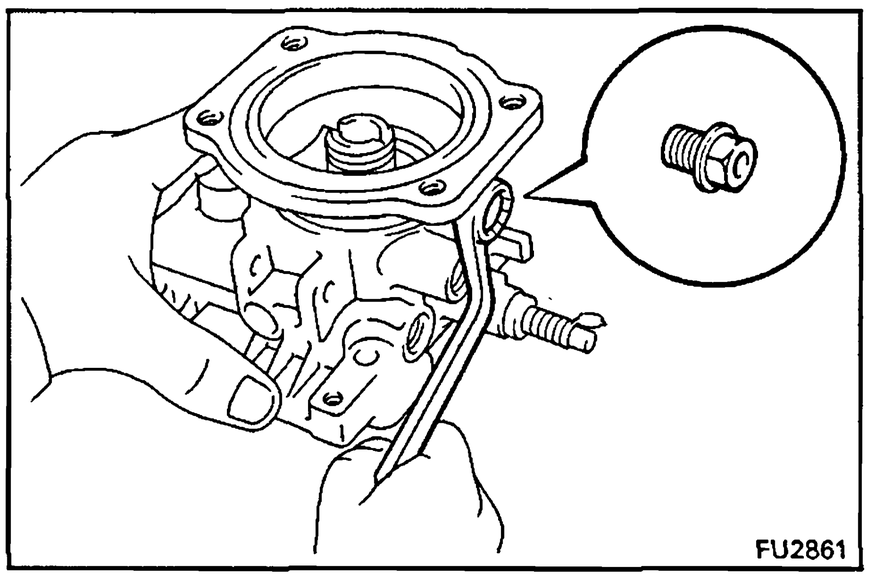

F. Remove No.2 overflow screw

Remove the cover and No.2 overflow screw.

17. CHECK FLYWEIGHT HOLDER THRUST CLEARANCE
(See step 20 on page FU-58)

Thrust clearance: 0.15 – 0.35 mm (0.0059 – 0.0138 in.)

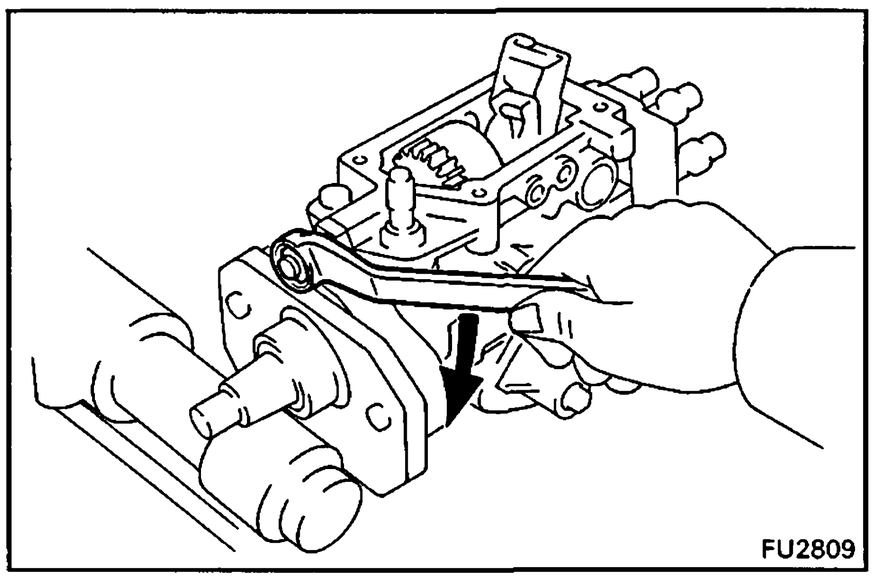

18. REMOVE GOVERNOR SHAFT AND FLYWEIGHT HOLDER

(a) Remove the governor shaft lock nut by turning it clockwise.

NOTICE: The governor shaft and lock nut have LH threads.

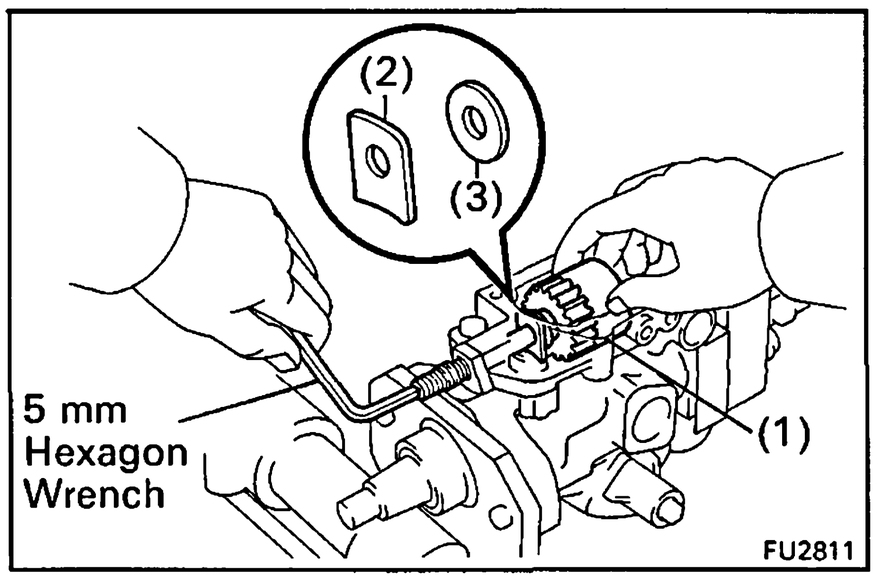

(b) Using a 5 mm hexagon wrench, remove the governor shaft clockwise, and remove the following part:

(1) Flyweight holder assembly

(2) No.1 flyweight washer

(3) Governor gear adjusting washer

HINT: Be careful not to drop the two washers into the pump housing.

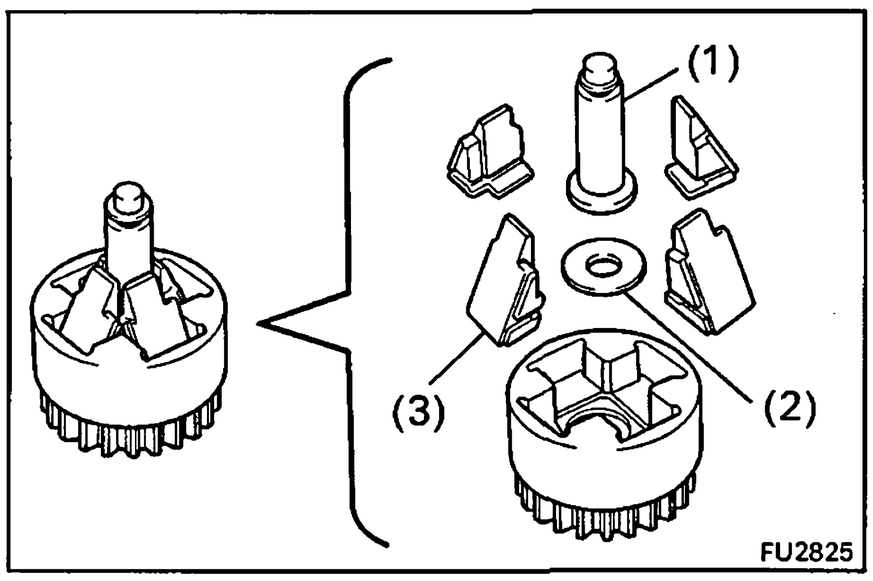

(c) Remove the following parts from the flyweight holder.

(1) Governor sleeve

(2) No.2 flyweight washer

(3) Four flyweights

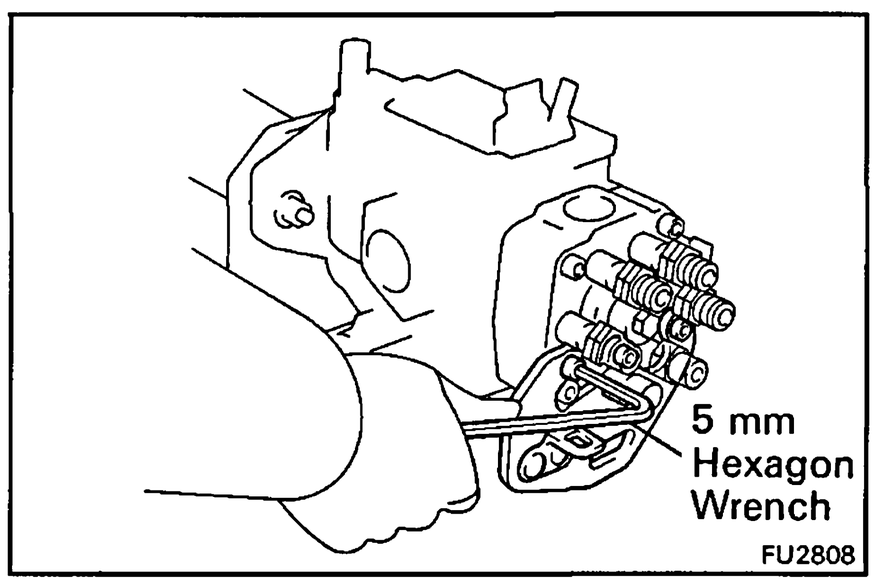

19. REMOVE INJECTION PUMP STAY

Using a 5 mm hexagon wrench, remove the three bolts and stay.

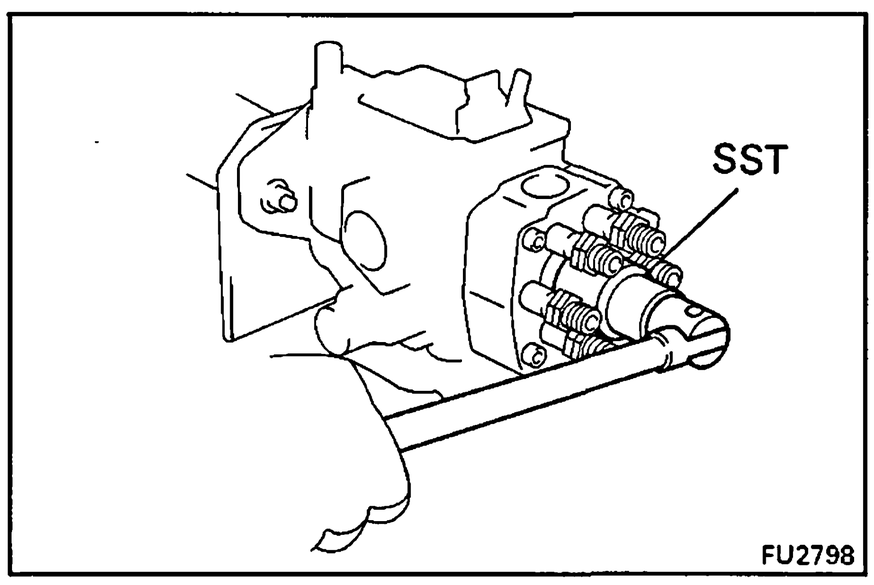

20. REMOVE DISTRIBUTIVE HEAD PLUG

Using SST, remove the distributive head plug.

SST 09260-54012 (09262-54010)

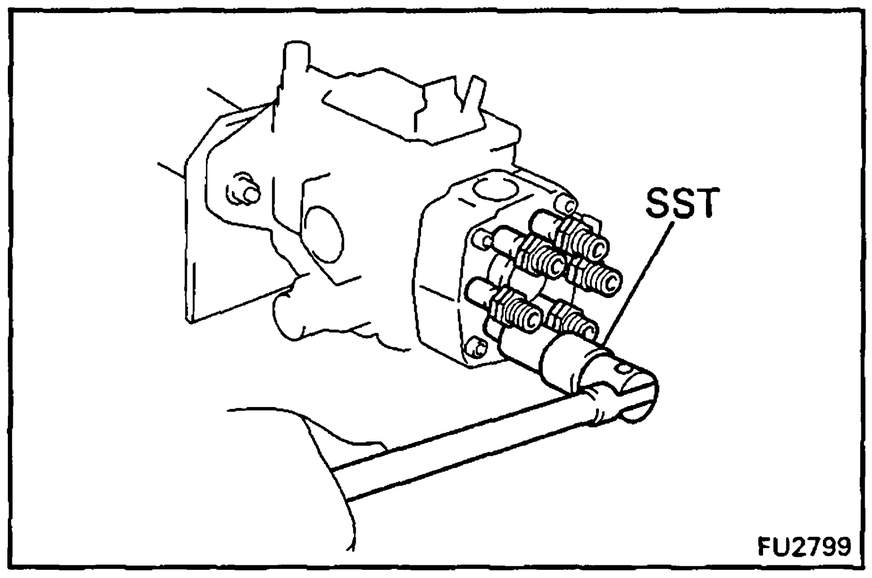

21. REMOVE DELIVERY VALVE HOLDERS

(a) Using SST, remove the delivery valve holders, springs and spring seats.

SST 09260-54012 (09269-54020)

(b) Remove the delivery valves and gaskets.

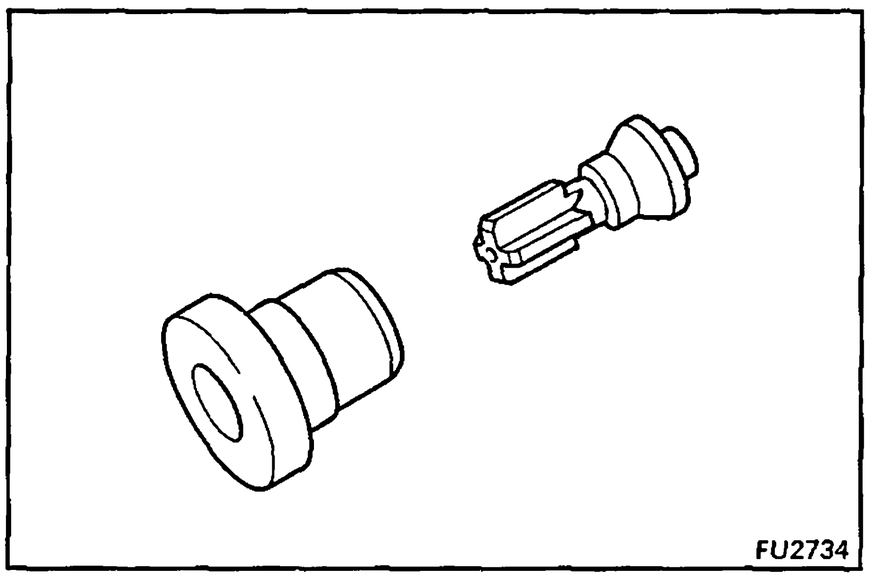

NOTICE: Do not touch the sliding surfaces of the delivery valve with your hand.

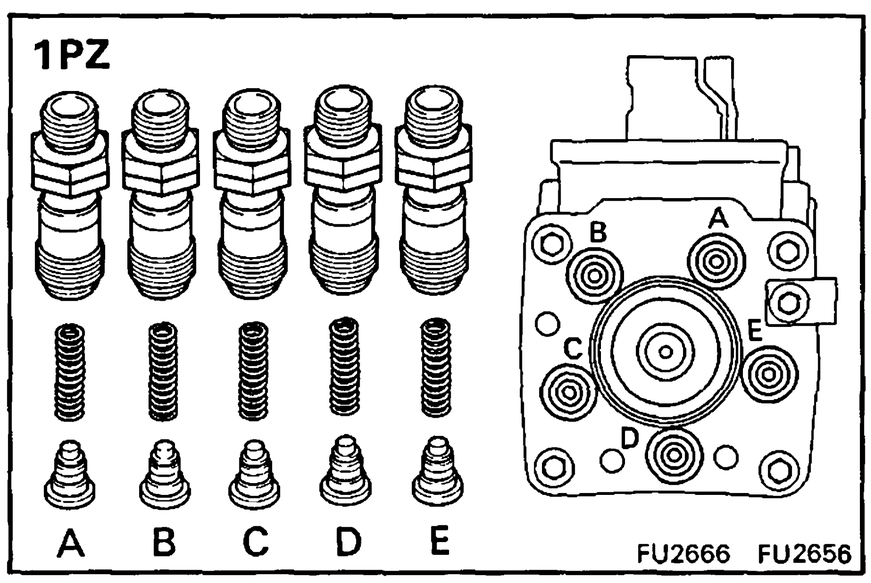

HINT: Arrange the delivery valves, springs, spring seats and holders in order.

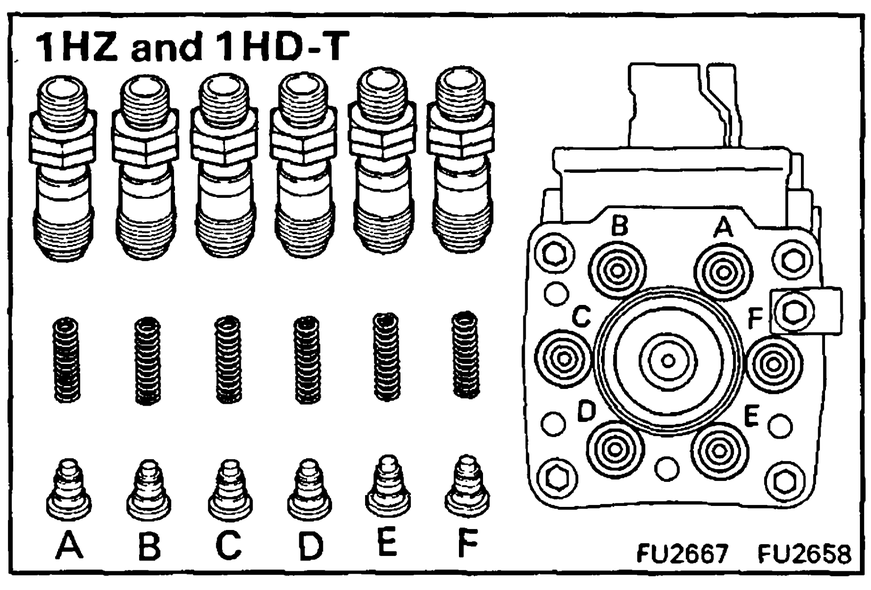

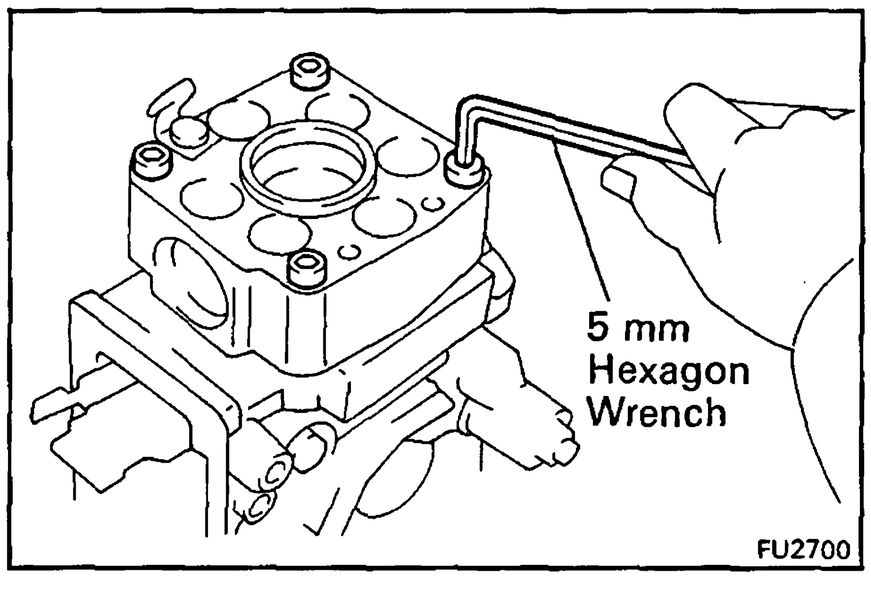

22. REMOVE DISTRIBUTIVE HEAD

(a) Using a 5 mm hexagon wrench, remove the four bolts.

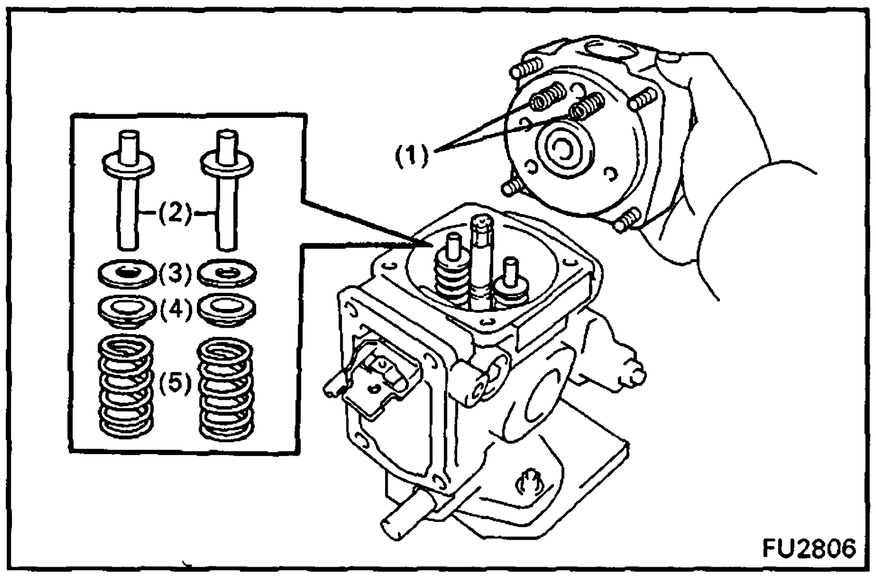

(b) Remove the distributive head and following parts:
  (1) Two lever support springs
  (2) Two plunger spring guides
  (3) Two plunger spring shims
  (4) Two upper spring seats
  (5) Two plunger springs

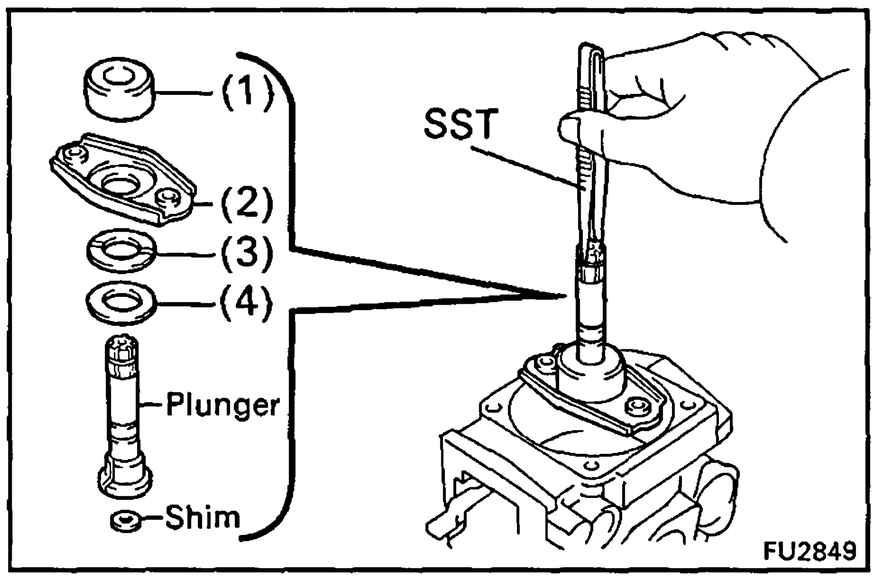

23. REMOVE PUMP PLUNGER

Using SST, remove the pump plunger and plunger adjusting shim together with the following parts:
  (1) Spill ring
  (2) Lower spring seat
  (3) Upper plunger plate
  (4) Lower plunger plate

SST 09260-54012 (09269-54030)

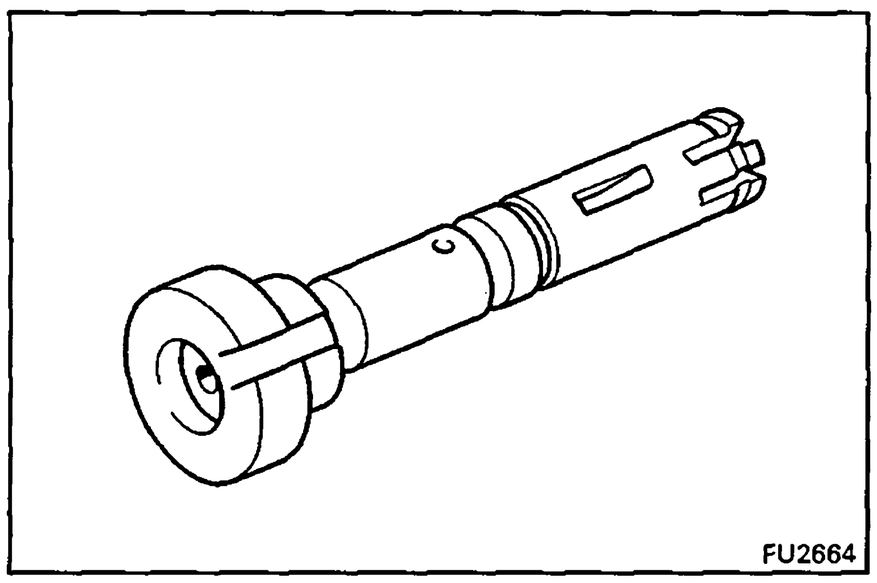

NOTICE: Do not touch the sliding surfaces of the pump plunger with your hand.

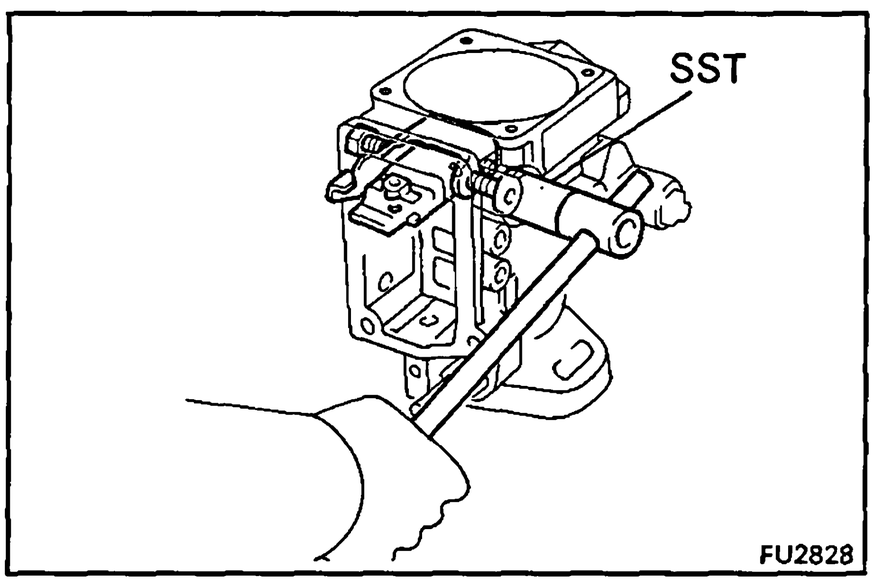

24. REMOVE GOVERNOR LINK

Using SST, remove the two support bolts, gaskets and governor link.

SST 09260-54012 (09269-54040)

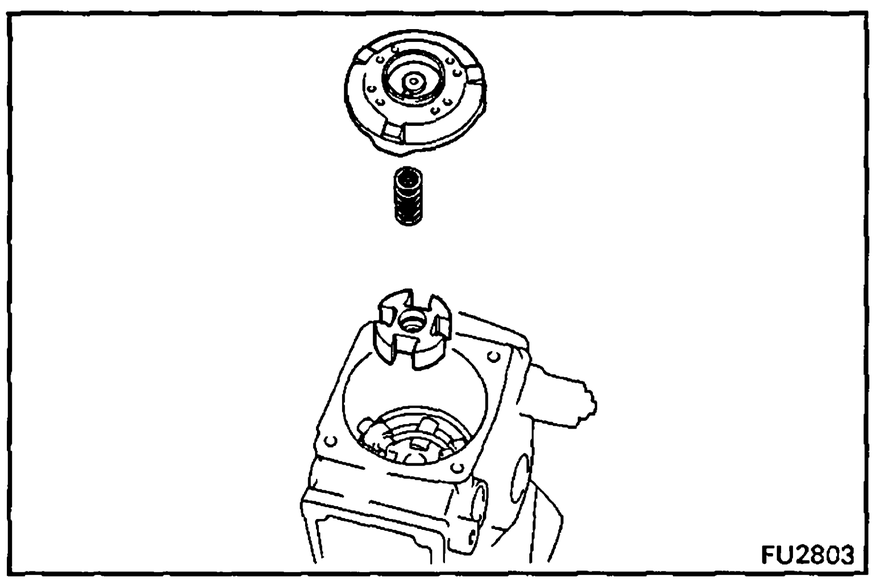

25. REMOVE FACE CAMPLATE AND COUPLING

Remove the face camplate, spring and coupling.

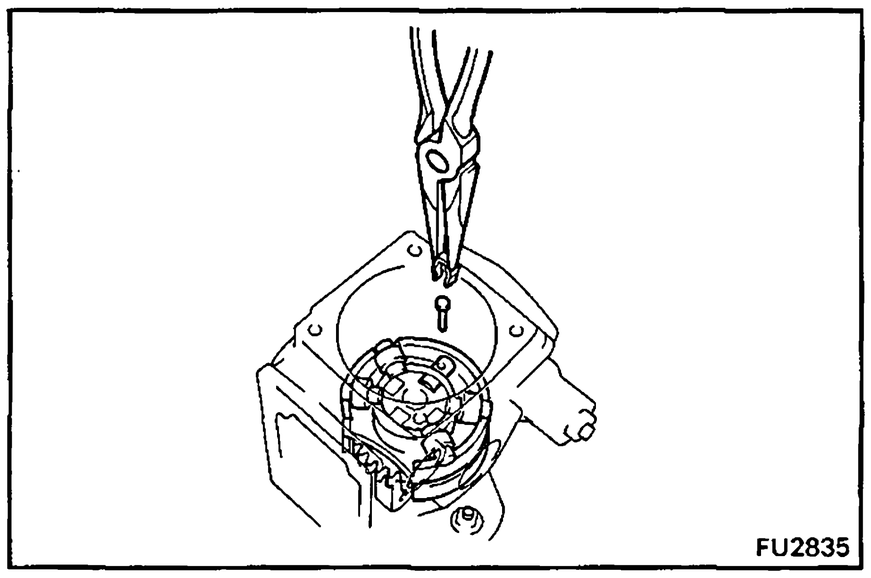

26. REMOVE ROLLER RING AND DRIVE SHAFT

(a) Remove the timer clip and stopper pin.

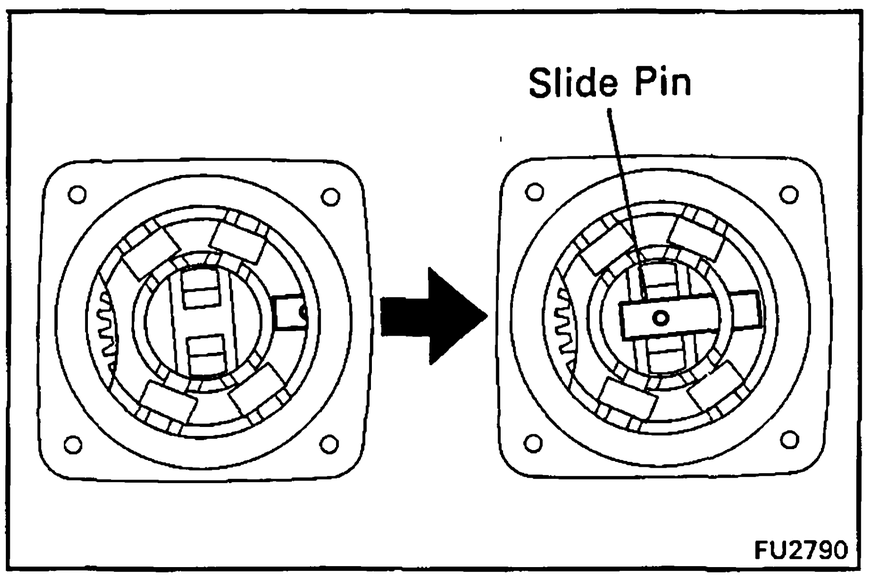

(b) Push the slide pin toward inside.

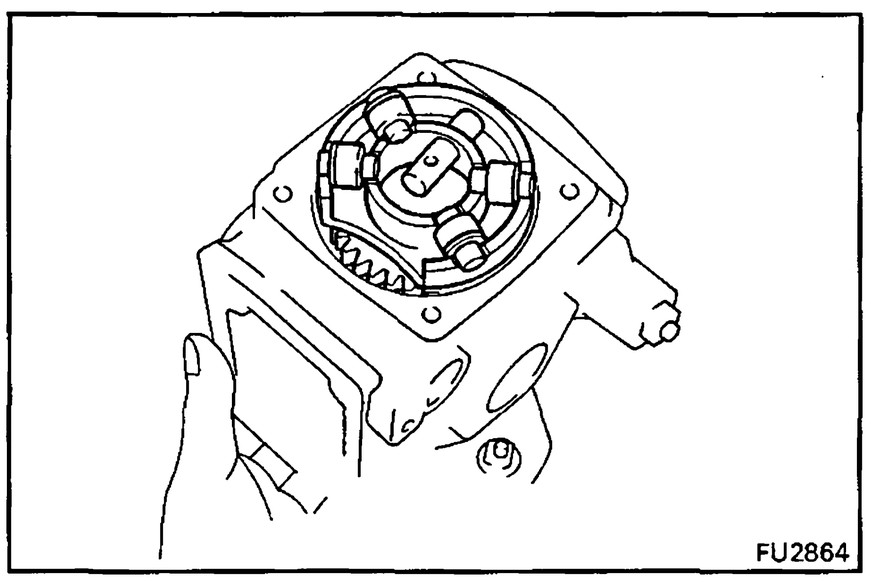

(c) (1PZ)
Push the drive shaft, and remove the roller ring, three rollers and shims assembly.

(1HZ and 1HD-T)
Push the drive shaft, and remove the roller ring, four rollers and shims assembly.

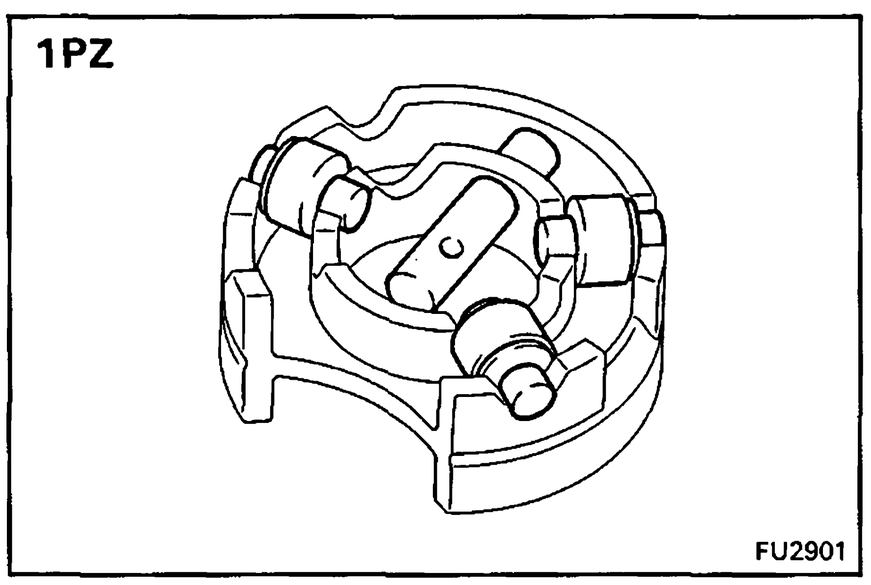

NOTICE:

- **Be careful not to drop the rollers.**
- **Do not alter the position or assembly of the rollers.**

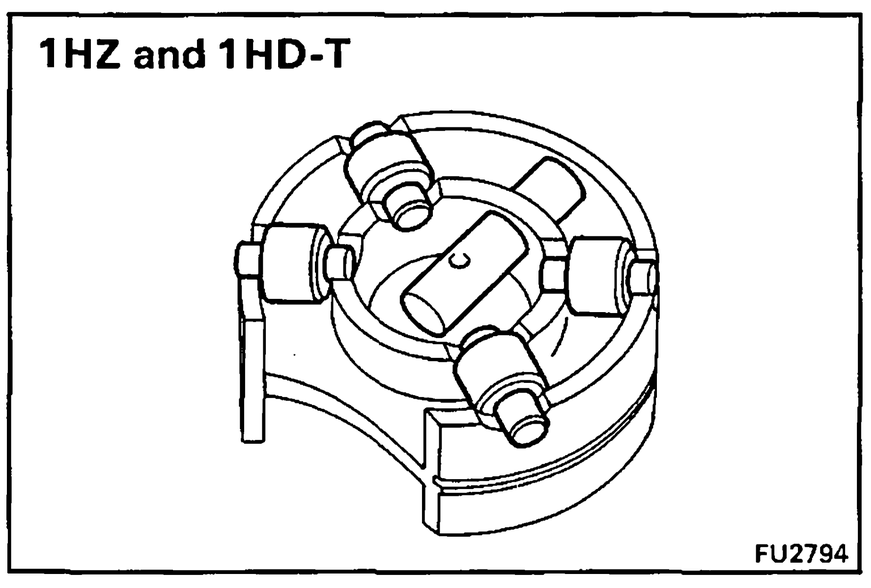

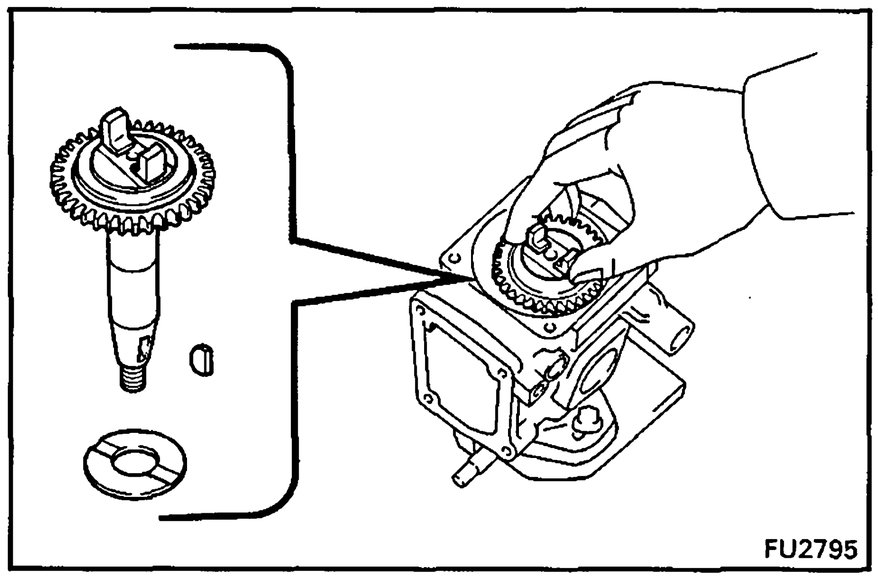

(d) Remove the drive shaft, governor drive gear, two joint rubbers assembly, set key and drive shaft washer.

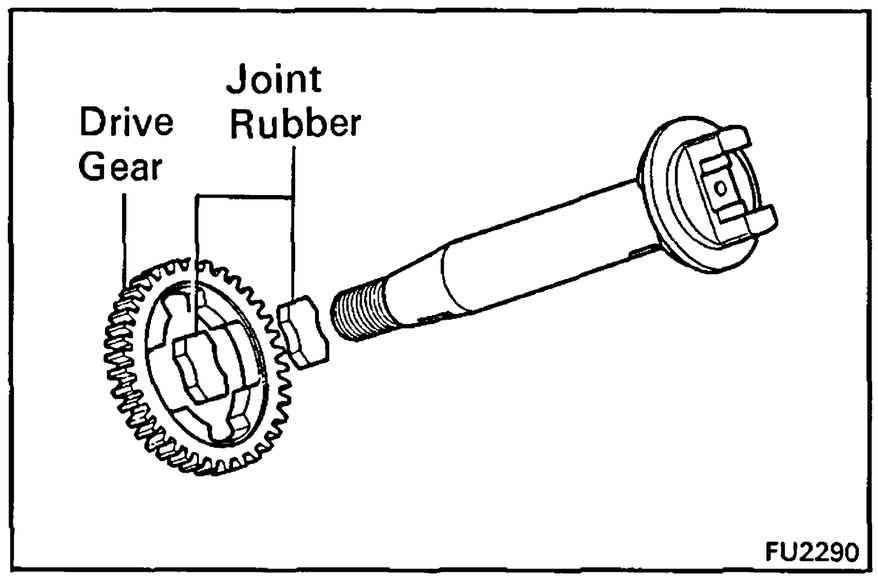

(e) Remove the drive gear and two joint rubbers from the drive shaft.

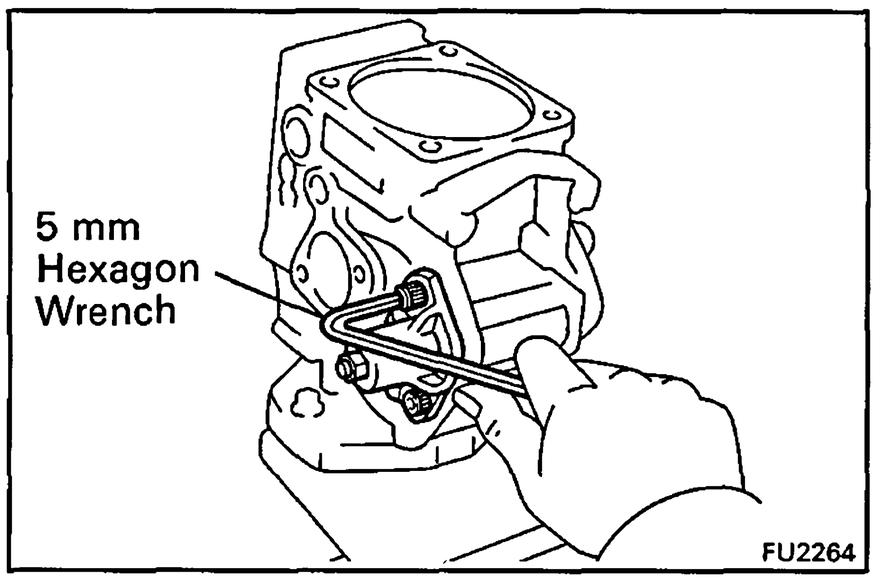

27. REMOVE TIMER

(a) Using a 5 mm hexagon wrench, remove the four bolts.

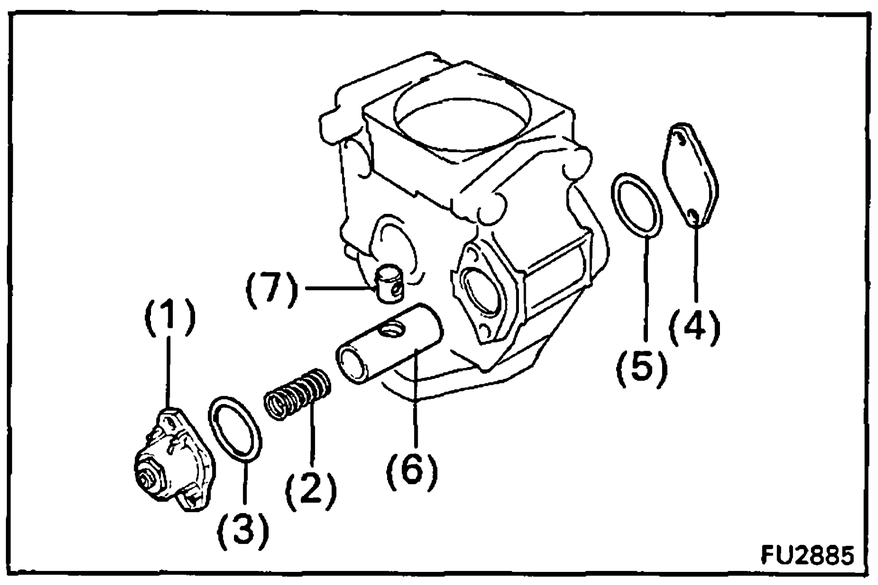

(b) Remove the following parts:

(1) LH timer cover, timer adjusting screw and nut assembly
(2) Spring
(3) O-ring
(4) RH timer cover
(5) O-ring
(6) Piston
(7) Sub-piston

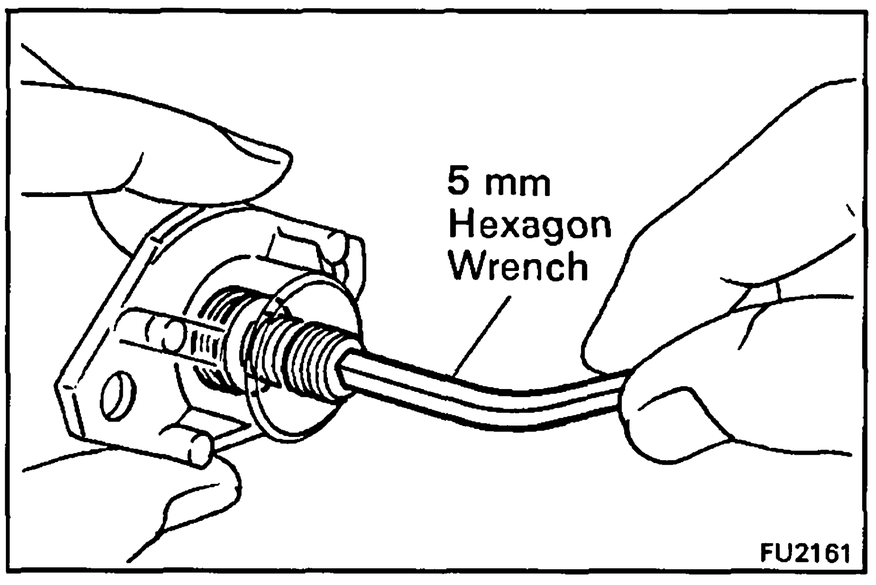

(c) Remove the nut from the LH timer cover.

(d) Using a 5 mm hexagon wrench, remove the timer adjusting screw.

(e) Remove the O-ring from the timer adjusting ring.

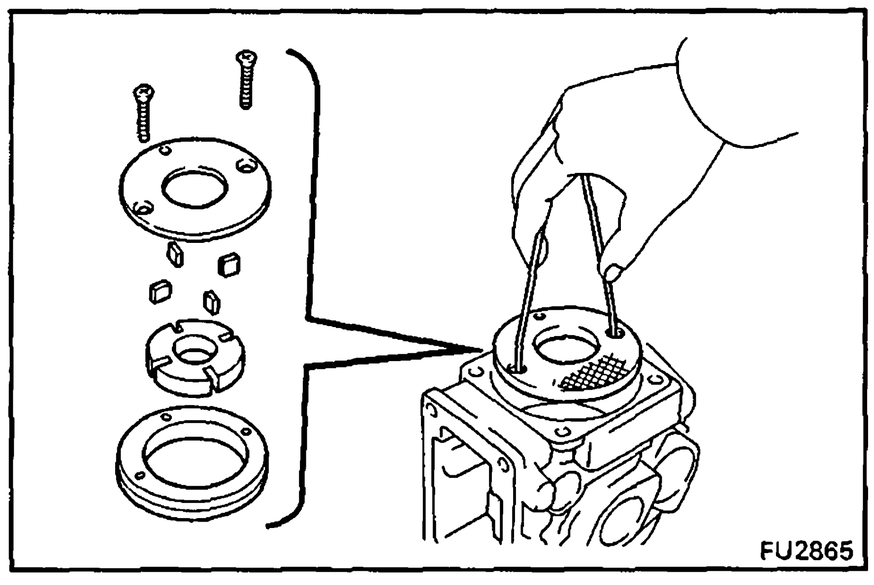

28. REMOVE FUEL FEED PUMP

(a) Remove the two screws.

(b) Using a piece of wire, remove the feed pump cover.

(c) Remove the feed pump rotor, four blades and liner.

NOTICE:

- **Be careful not to interchange the blade positions.**
- **Be careful not to damage the pump body.**

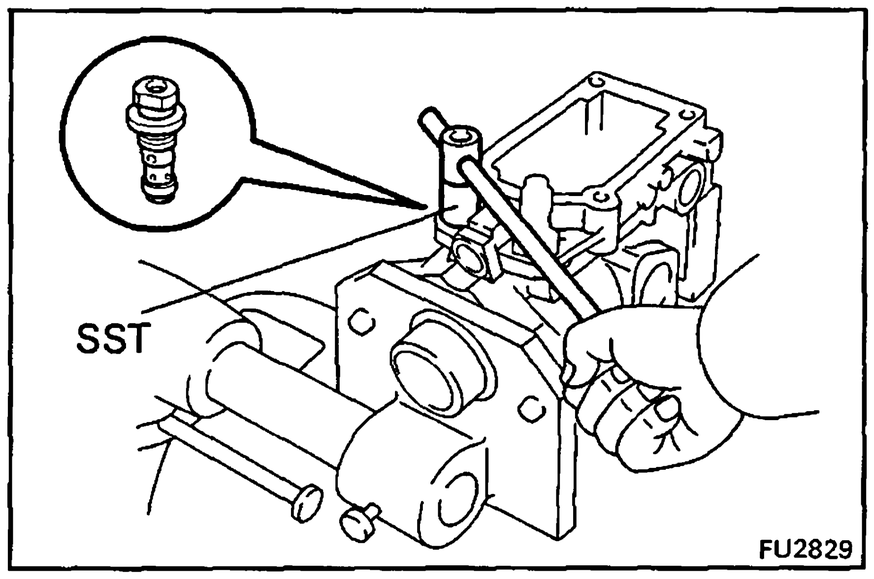

29. REMOVE REGULATOR VALVE

Using SST, remove the regulator valve and two O-rings.

SST 09260-54012 (09262-54020)

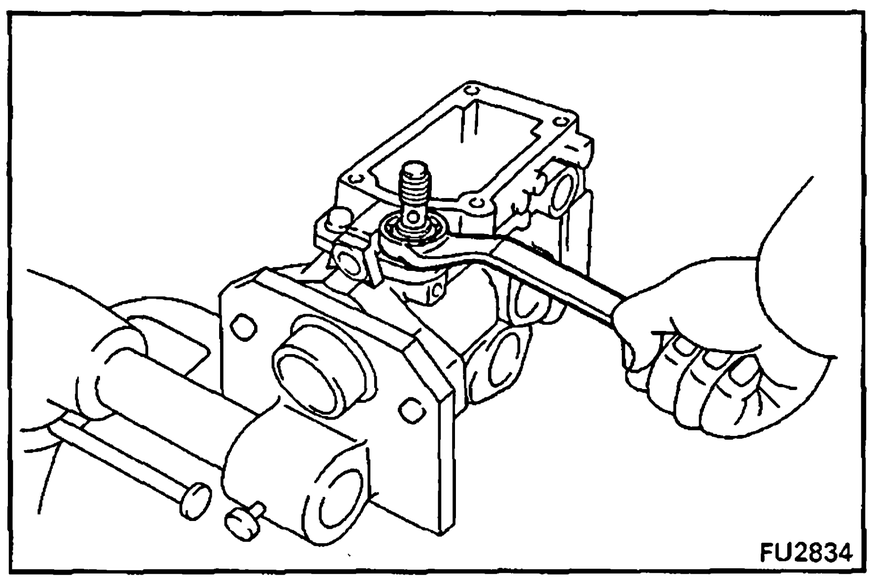

30. REMOVE FUEL INLET HOLLOW SCREW

Remove the hollow screw and gasket.

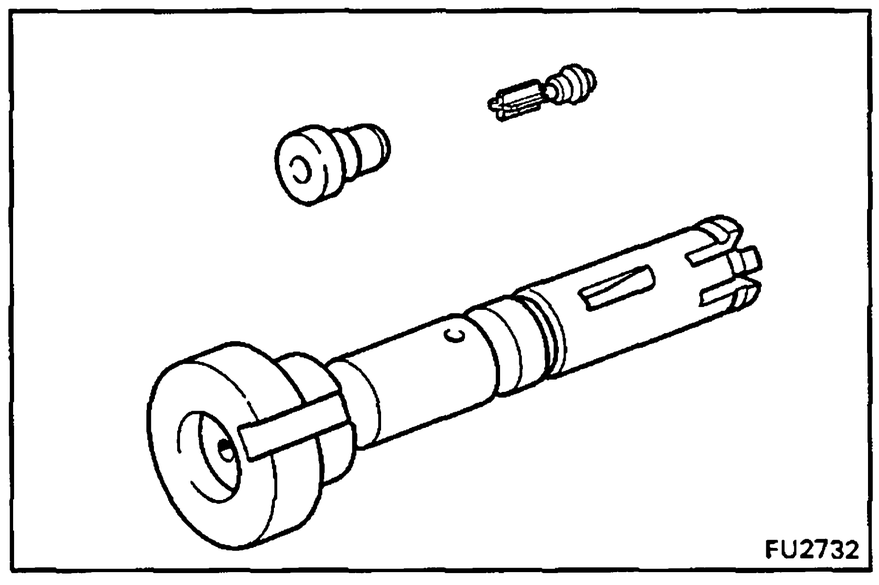

INSPECTION OF INJECTION PUMP COMPONENTS

NOTICE: Do not touch the sliding surfaces of the pump plunger and delivery valves.

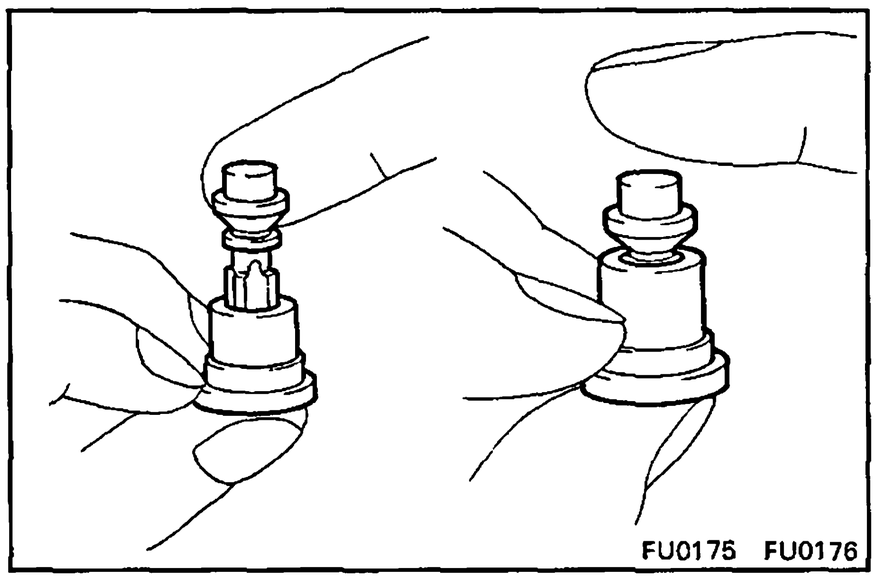

1. INSPECT DELIVERY VALVES (1PZ and 1HZ)

(a) Pull up the valve and close the hole at the valve seat bottom end with your thumb.
When the valve is released, it should sink down quickly and stop at the position where the relief ring closes the valve seat hole.

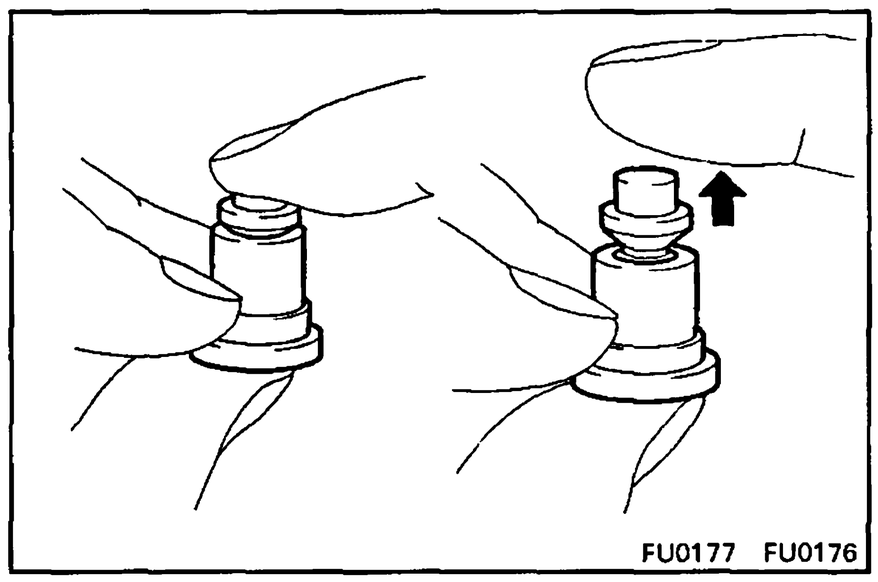

(b) Close the hole at the valve seat bottom end with your thumb.
Insert the valve into the valve seat and press down with your finger. When your finger is released, the valve should rise back to its original position.

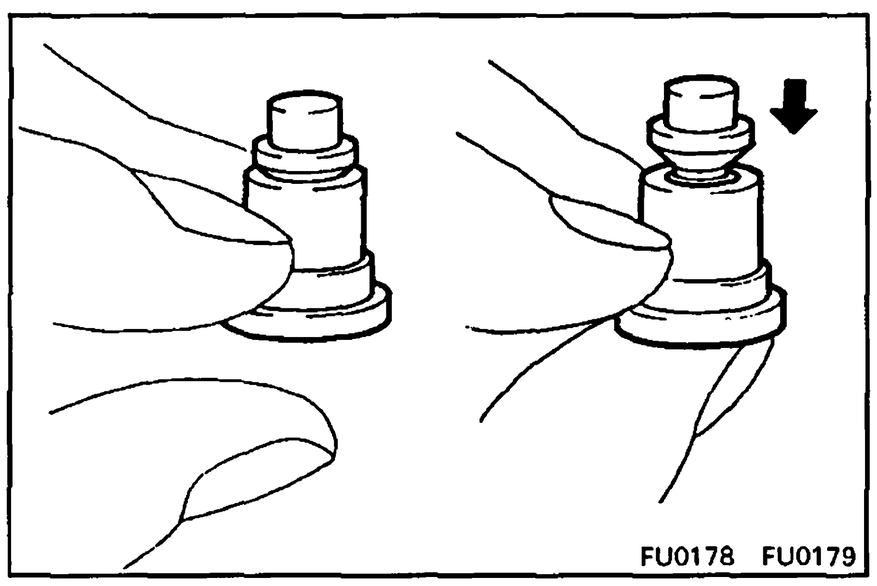

(c) Remove your thumb from the valve seat hole.
The valve should close completely by its own weight.

If operation is not as specified, replace the valve as a set.

HINT: Before using a new valve set, wash off the rust prevention compound with light oil or gasoline. Then re-wash with diesel fuel and perform the above tests.

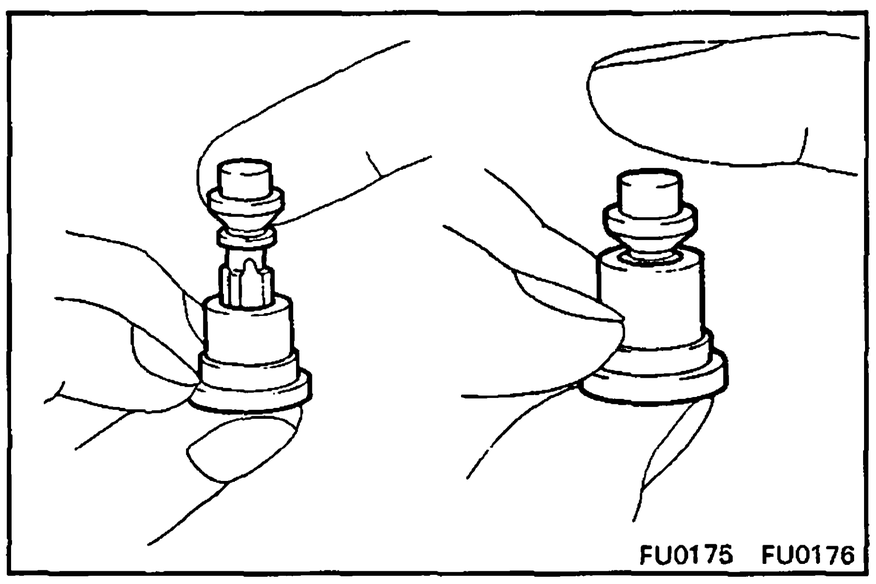

(1HD-T)

Pull up the valve. When the valve is released, it should sink down quickly.
If operation is not as specified, replace the valve as a set.

HINT: Before using a new valve set, wash off the rust prevention compound with light oil or gasoline. Then re-wash with diesel fuel and perform the above tests.

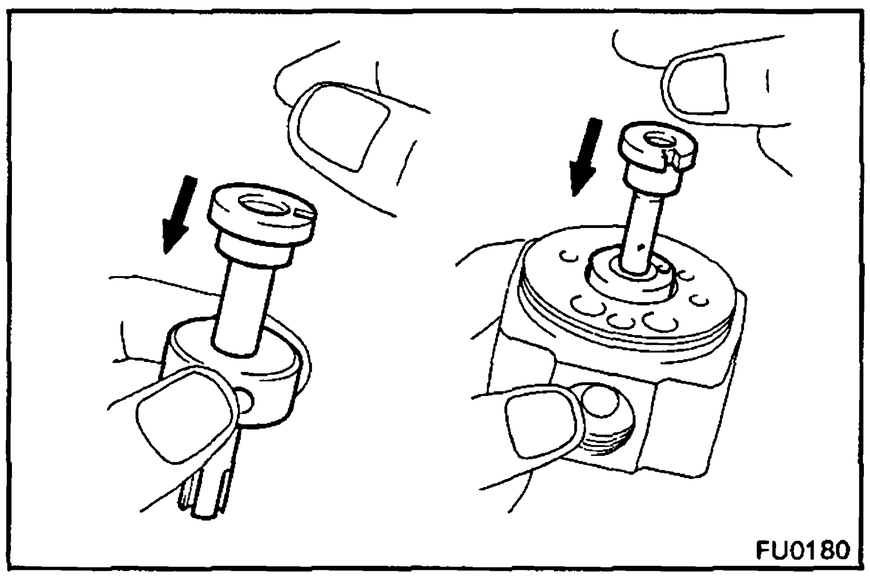

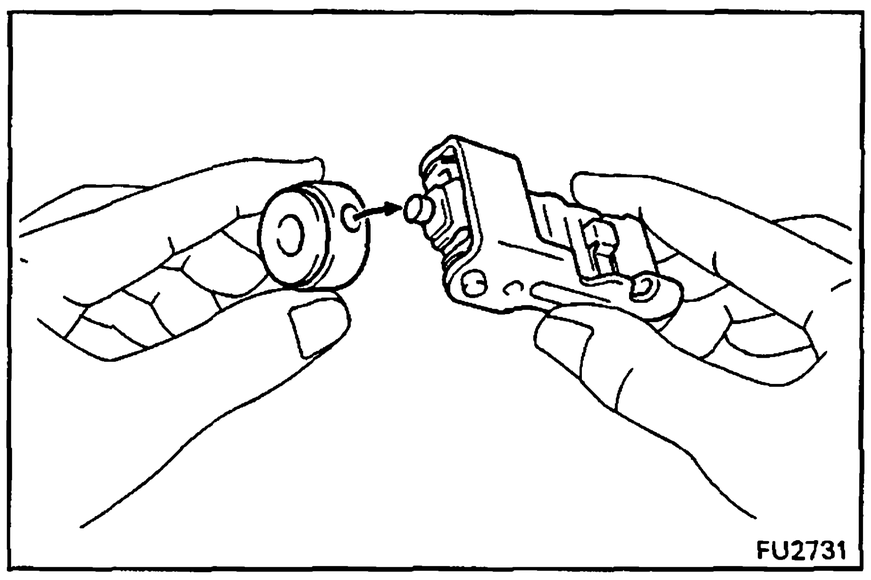

2. **INSPECT PUMP PLUNGER, SPILL RING AND DISTRIBUTIVE HEAD**

(a) Tilt the spill ring (distributive head) slightly and pull out the plunger.

(b) When released, the plunger should sink down smoothly into the spill ring (distributive head) by its own weight.

(c) Rotate the plunger and repeat the test at various positions.

If the plunger sticks at any position, replace the parts as a set.

(d) Insert the governor link ball pin into the spill ring and check that it moves smoothly without any play.

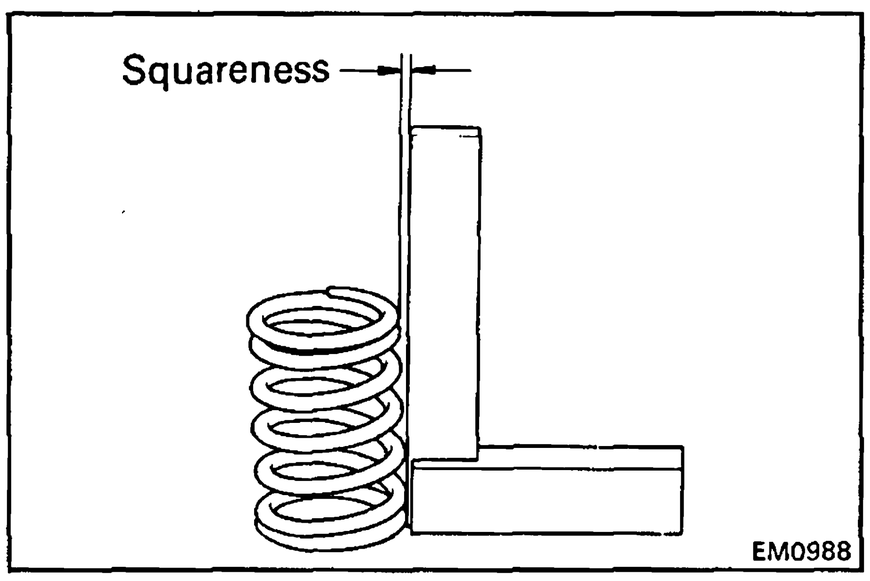

3. **INSPECT PLUNGER SPRINGS FOR SQUARENESS**

Using a steel square, check the squareness of the plunger springs.

Maximum squareness: 2.0 mm (0.079 in.)

If squareness is greater than maximum, replace the springs.

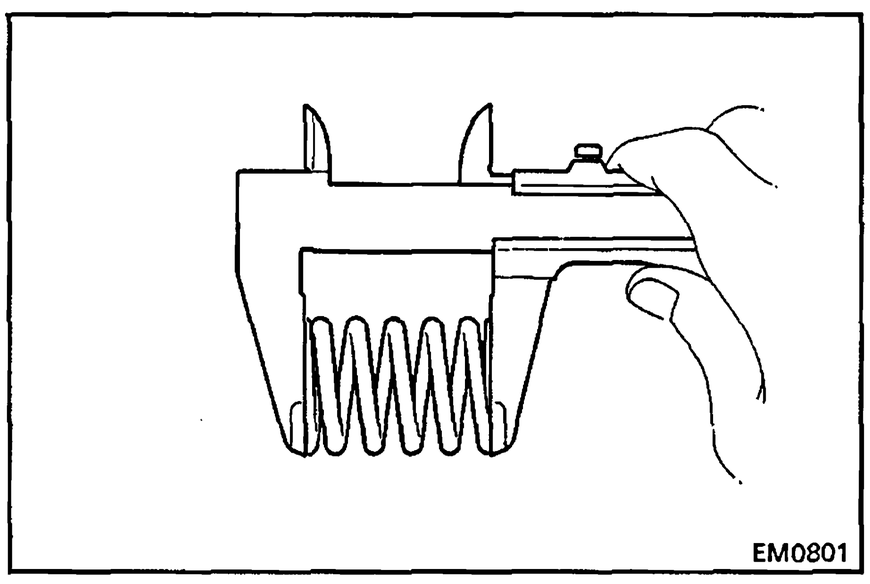

4. **INSPECT SPRING LENGTH**

Using vernier calipers, measure the free length of each spring.

Spring free length:

Delivery valve spring	
1PZ and 1HZ	**24.4 mm (0.961 in.)**
1HD-T	**19.1 mm (0.752 in.)**
Plunger spring	
1PZ and 1HZ	**30.0 mm (1.181 in.)**
1HD-T	**31.2 mm (1.228 in.)**
Coupling spring	
1PZ and 1HZ	**16.6 mm (0.654 in.)**
1HD-T	**15.5 mm (0.610 in.)**
Pneumatic bellows spring (w/ HAC)	
1PZ and 1HZ (w/ HAC)	**35.0 mm (1.378 in.)**
Boost compensator spring	
1HD-T (Europe)	**19.7 mm (0.776 in.)**
1HD-T (Others w/o BACS)	**19.6 mm (0.772 in.)**
1HD-T (Others w/ BACS)	**21.8 mm (0.858 in.)**

If the free length is not as specified, replace the spring(s).

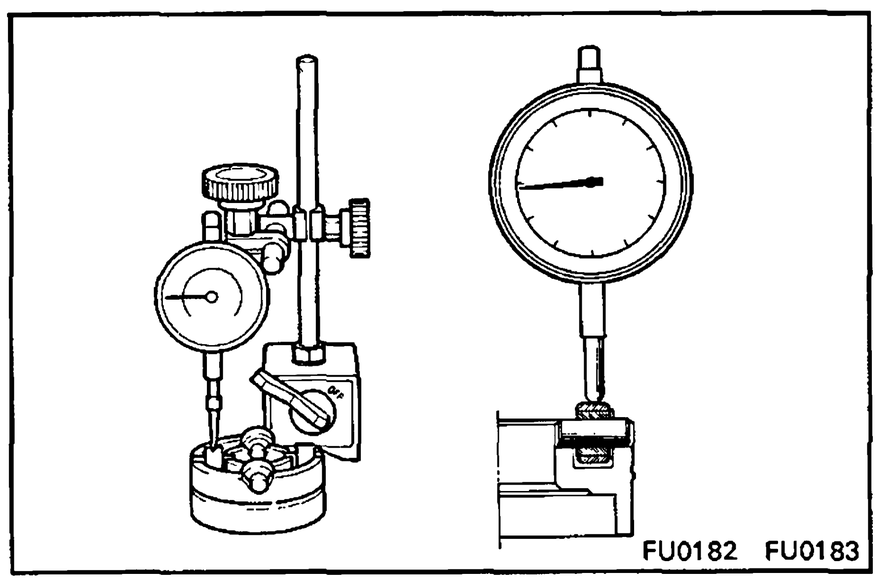

5. INSPECT ROLLER RING AND ROLLERS

Using a dial indicator, measure the roller height.

Roller height variation: 0.02 mm (0.0008 in.)

If the variation is greater than specification, replace the roller ring and roller as a set.

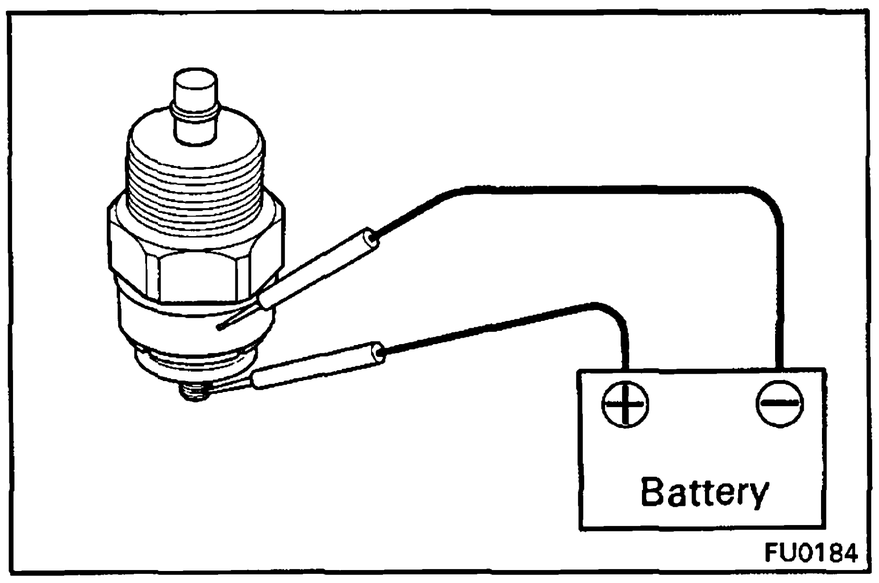

6. INSPECT FUEL CUT SOLENOID

(a) Connect the solenoid valve body and terminal to the battery terminals.

(b) You should feel the click from the solenoid valve when the battery power is connected and disconnected.

If the solenoid valve is not operating properly, replace it.

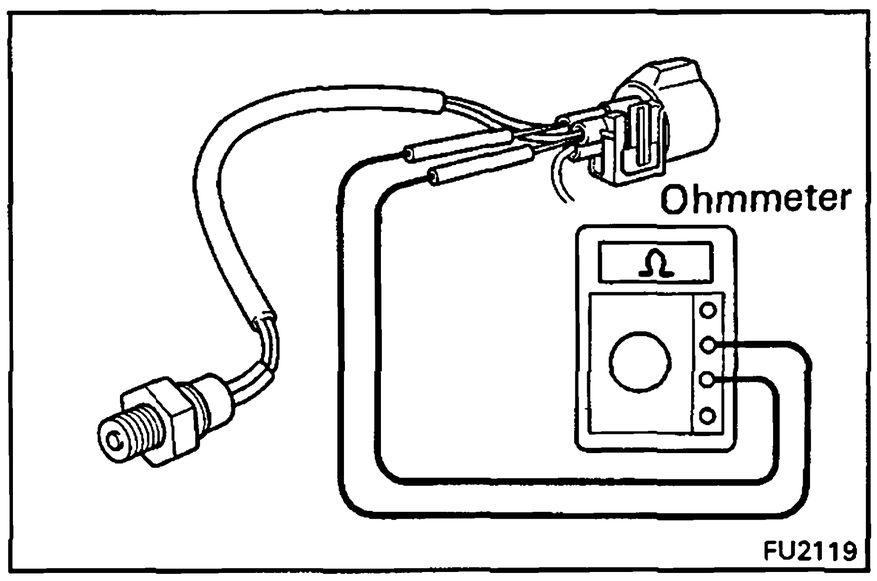

7. INSPECT PICKUP SENSOR

Using an ohmmeter, measure the resistance between the terminals.

Resistance: 600 – 800 Ω

If resistance is not as specified, replace the sensor.

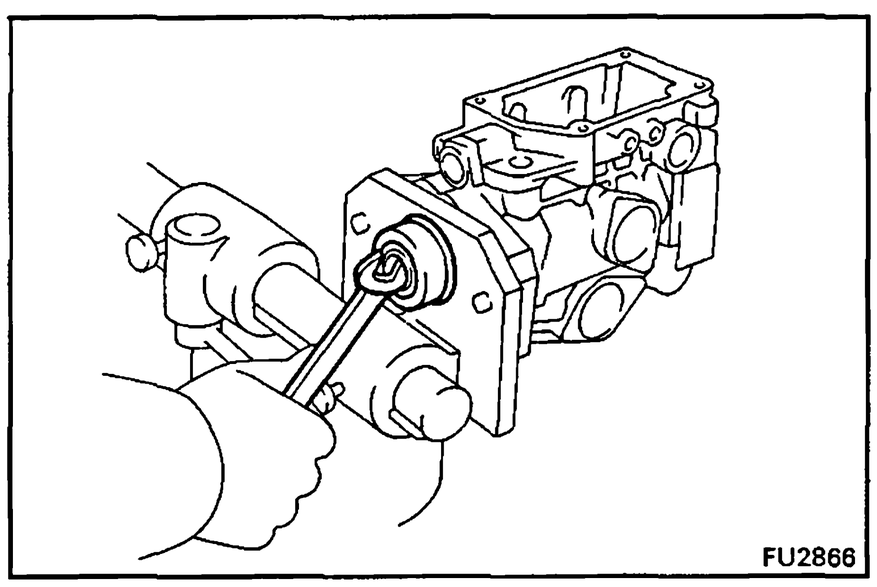

8. IF NECESSARY, REPLACE OIL SEAL

(a) Using a wrench, pry out the oil seal.

NOTICE: Be careful not to damage to the pump body.

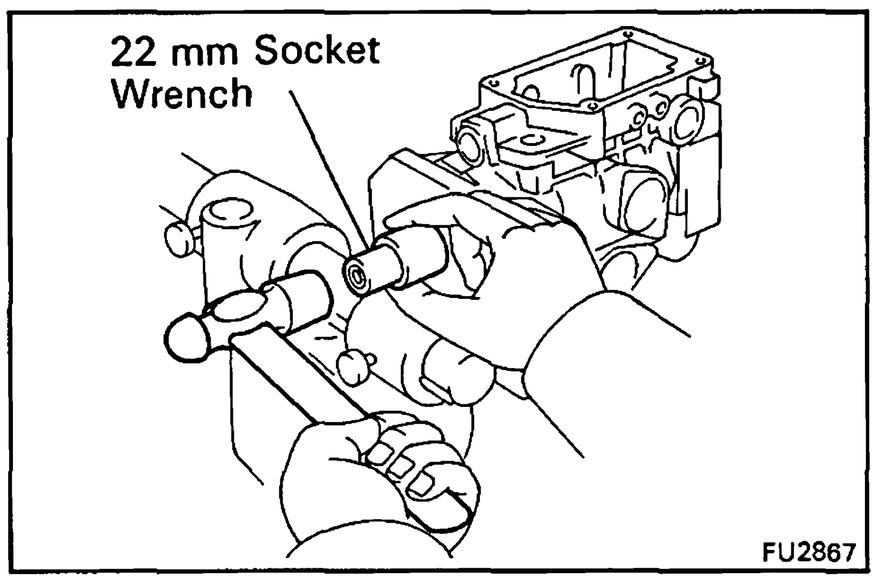

(b) Apply MP grease to the lip of a new oil seal.

(c) Using a 22 mm socket wrench, tap in the oil seal until its surface is flush with the pump housing.

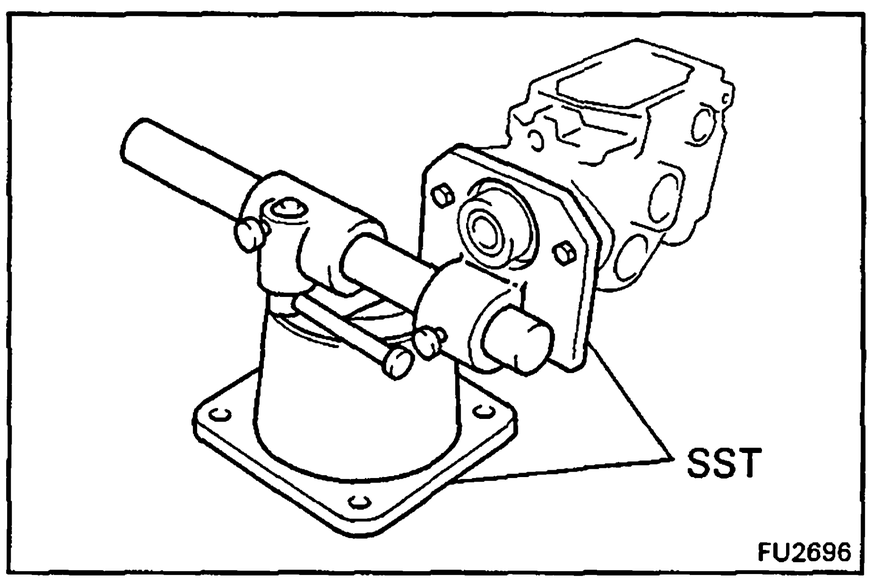

ASSEMBLY OF INJECTION PUMP

(See pages FU-30, 31, 32)

1. MOUNT PUMP BODY TO SST (STAND)

SST 09241-76022 and 09245-54010

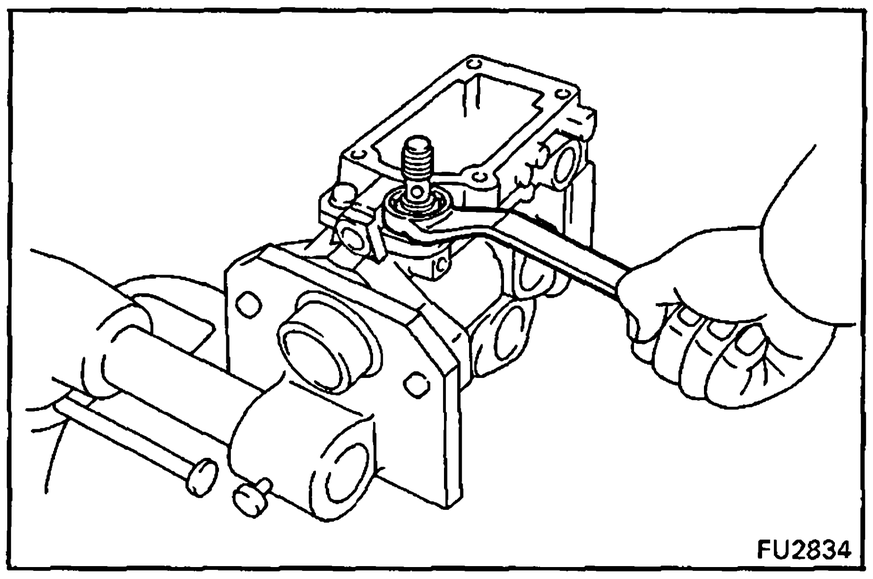

2. INSTALL FUEL INLET HOLLOW SCREW

Install a new gasket and the hollow screw.

Torque: 375 kg-cm (27 ft-lb, 37 N·m)

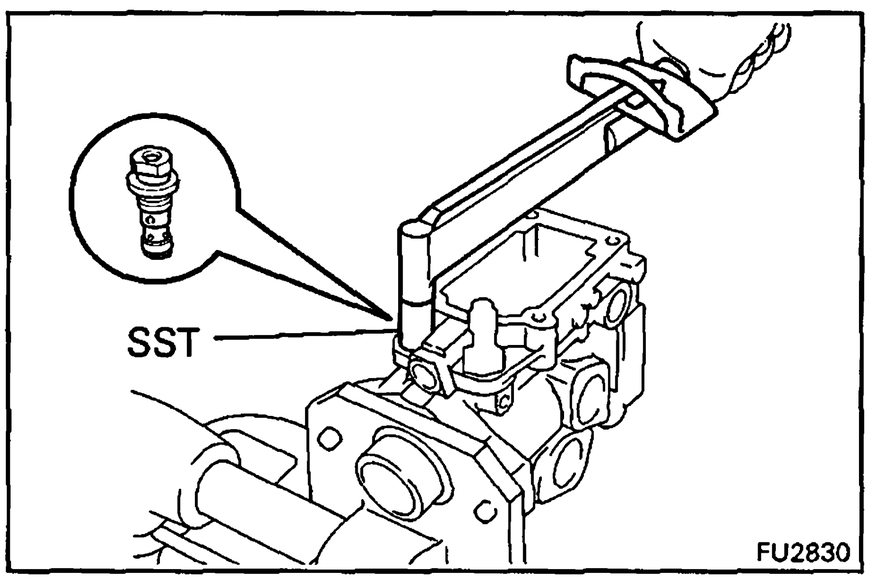

3. INSTALL REGULATOR VALVE

(a) Install the two O-rings to the regulator valve.

(b) Using SST, install the regulator valve.

SST 09260-54012 (09262-54020)

Torque: 90 kg-cm (78 in.-lb, 8.8 N·m)

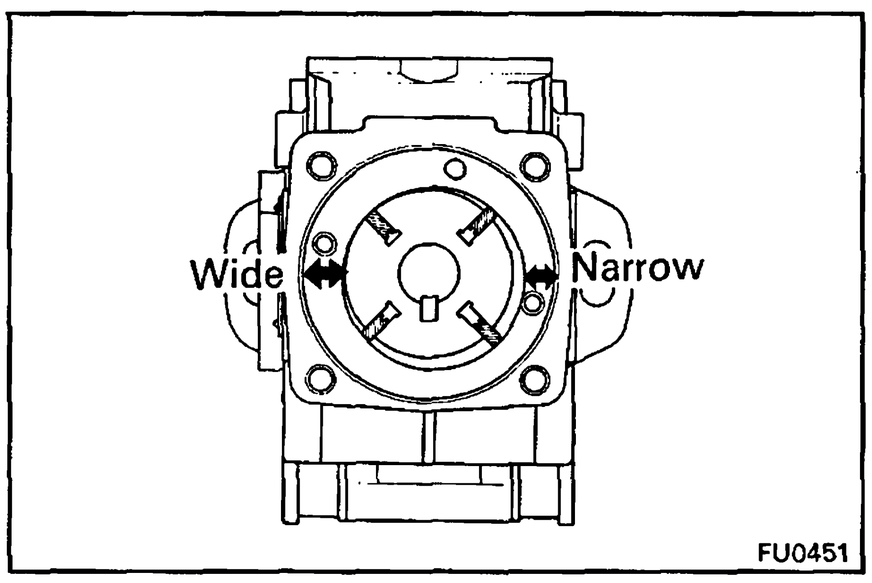

4. INSTALL FUEL FEED PUMP

(a) Install the liner, rotor and four blades.

(b) Check that the liner and blades are facing in the correct direction, as shown.

(c) Check that the blades move smoothly.

(d) Align the fuel outlet holes of the cover and liner.

(e) Install the pump cover with the two screws.

Torque: 25 kg-cm (22 in.-lb, 2.5 N·m)

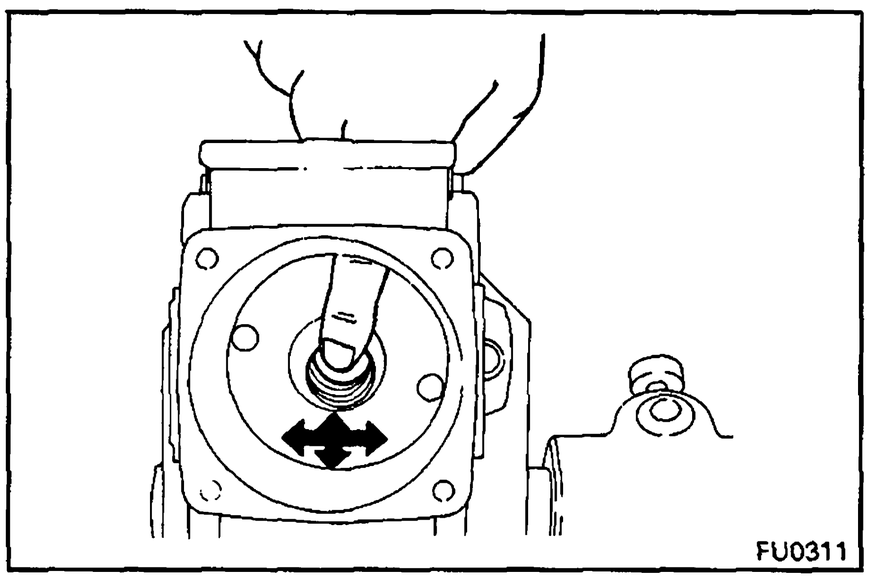

(f) Check that the rotor moves smoothly.

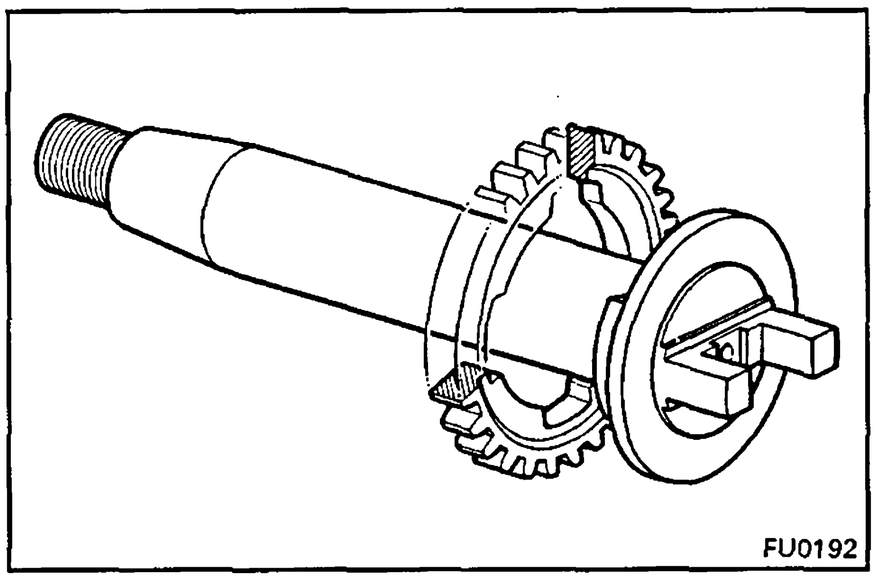

5. INSTALL DRIVE SHAFT

(a) Install the drive gear on the drive shaft as shown.

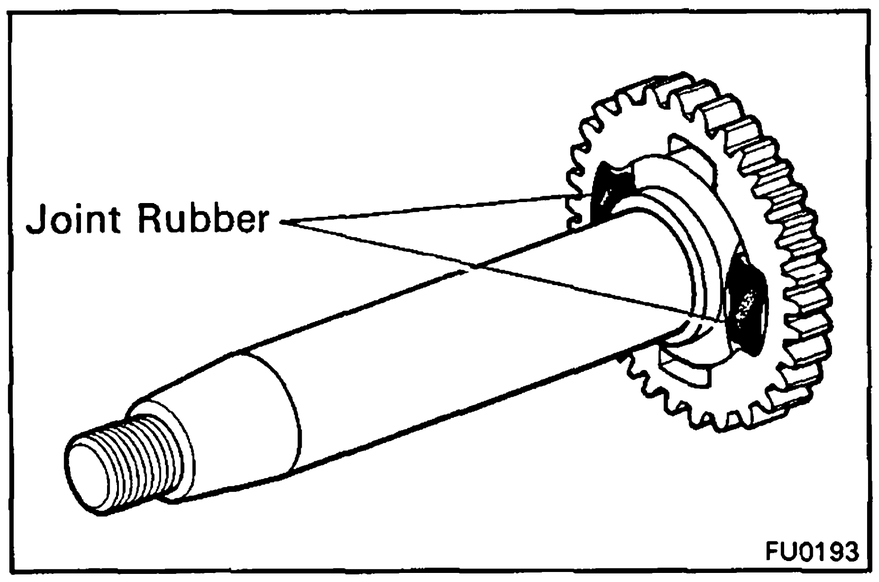

(b) Install two new joint rubbers into the drive gear.

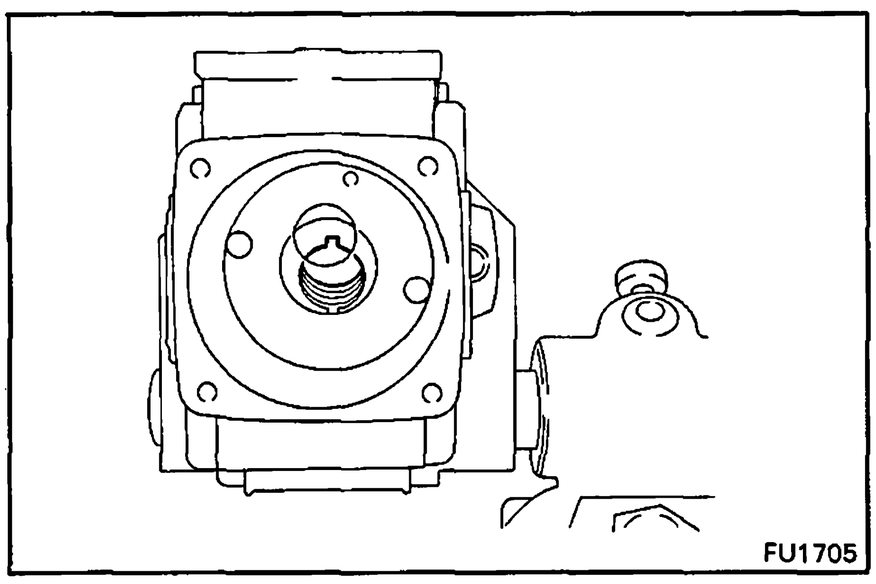

(c) Position the key groove of the feed pump rotor upward.

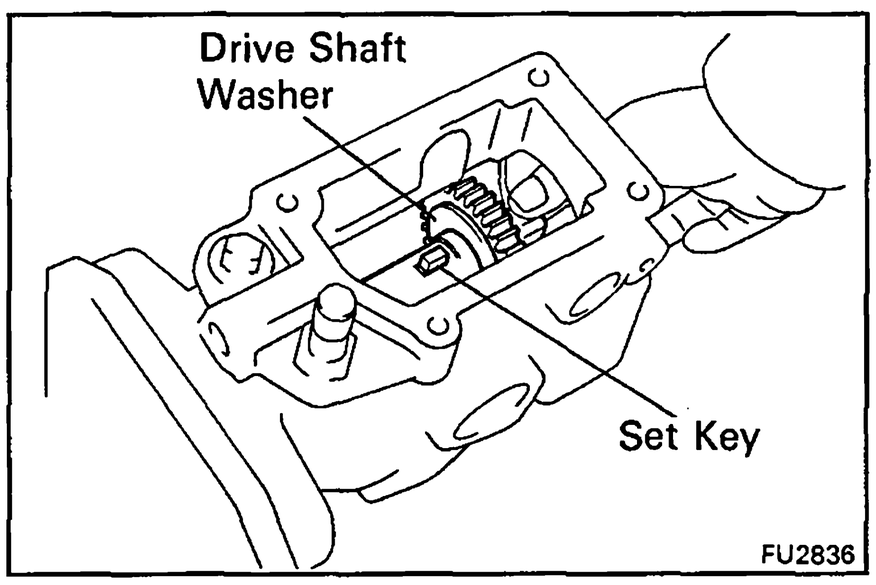

(d) Install the set key and drive shaft washer on the drive shaft and insert the drive shaft assembly into the pump housing.

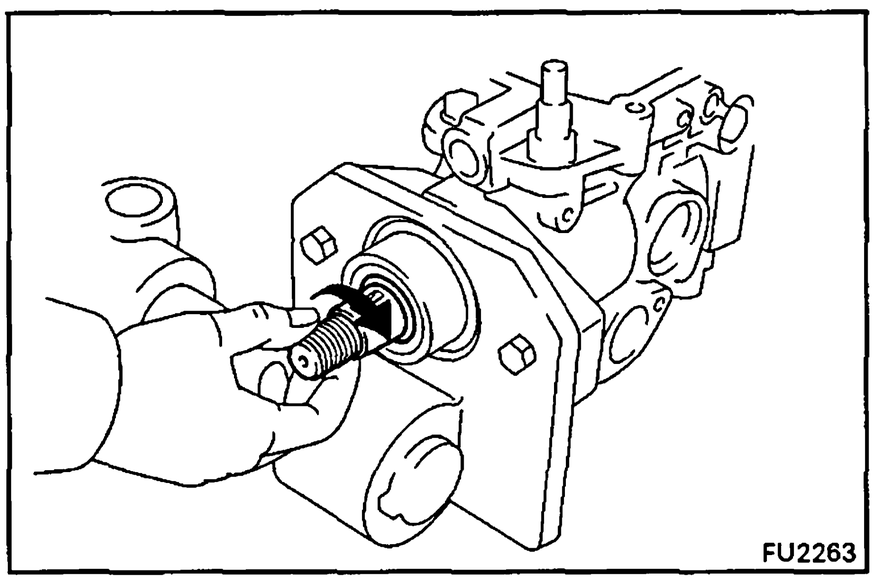

(e) Check that the drive shaft turns without catching.

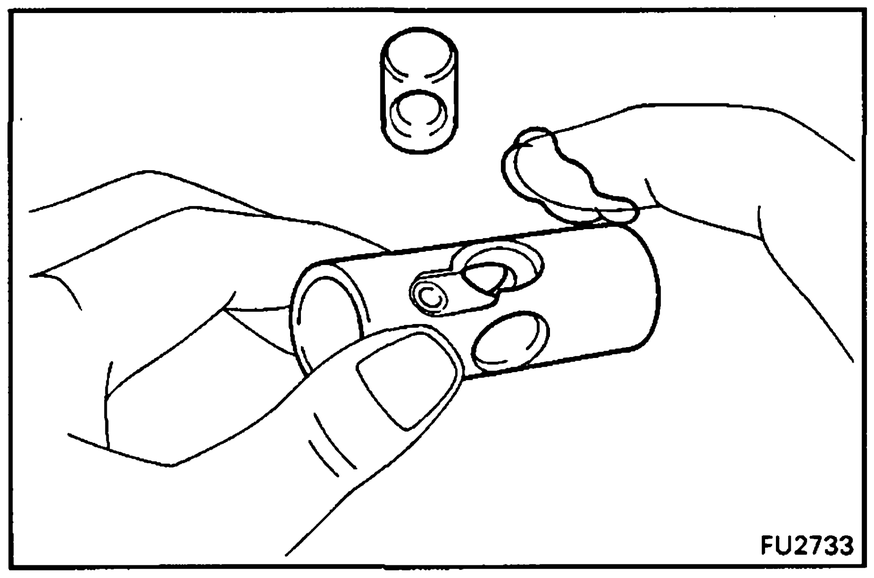

6. INSTALL TIMER PISTON

(a) Apply No. 50 DENSO grease to the timer piston.

(b) Install the sub-piston into the timer piston.

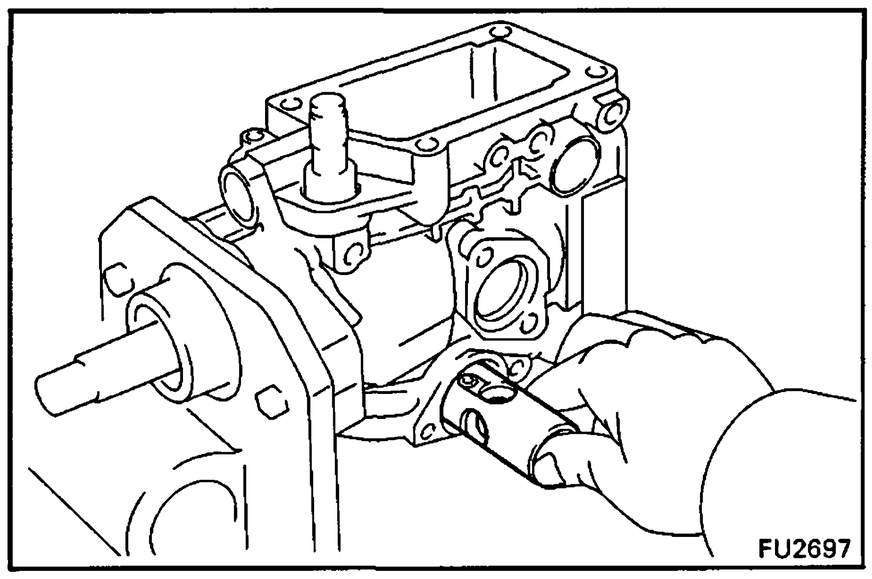

(c) Insert the timer piston into the pump housing.

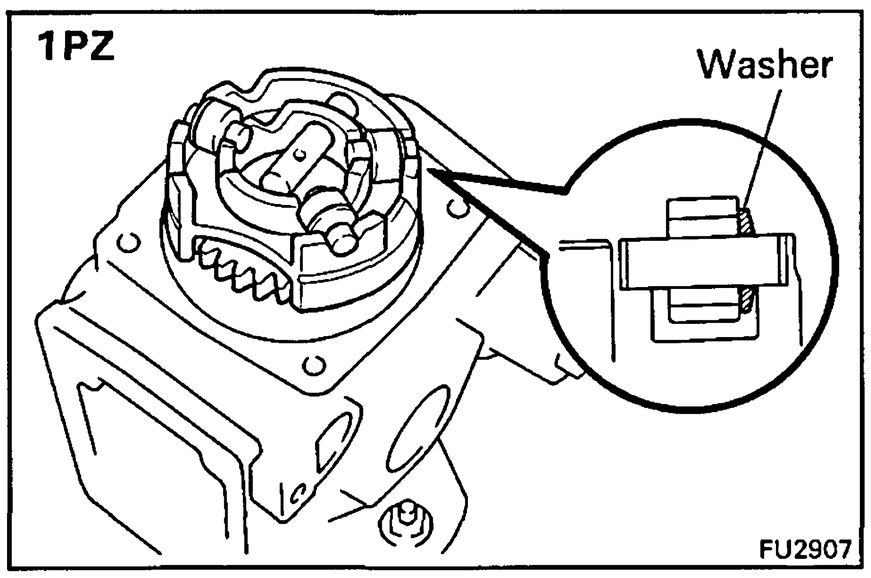

7. INSTALL ROLLER RING

(a) (1PZ)
Install the slide pin, three rollers and washers on the roller ring as shown in the illustration.

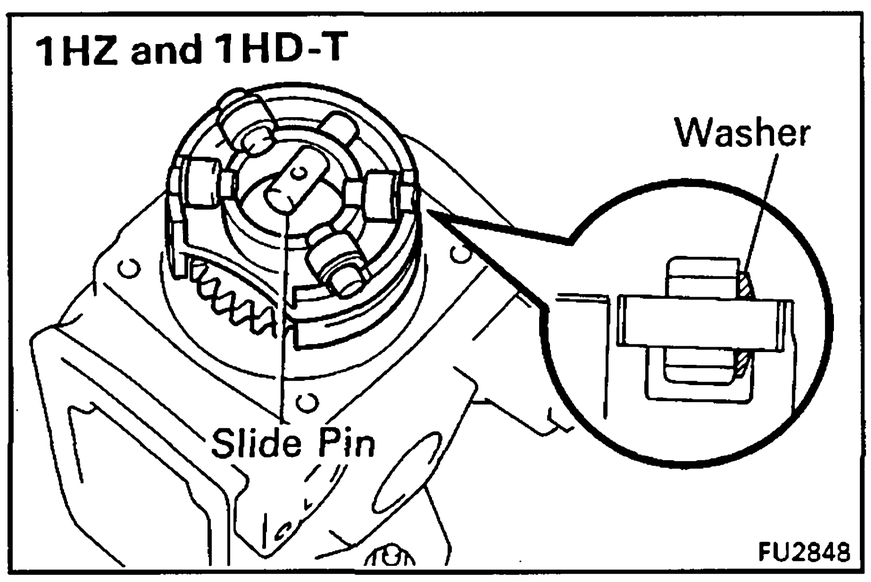

(b) (1HZ and 1HD-T)
Install the slide pin, four rollers and washers on the roller ring.

(c) Check that the roller is facing the flat surface of the washer.

(d) Install the roller ring into the pump housing.

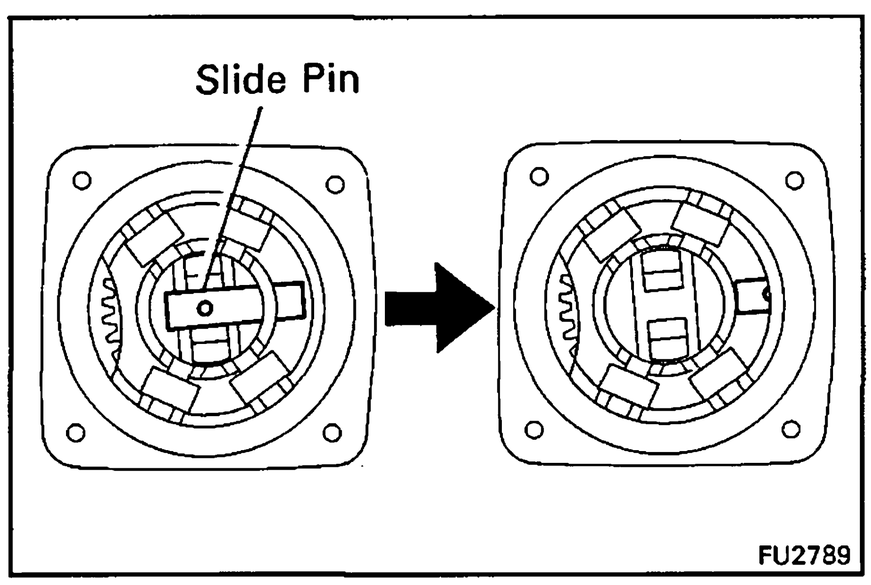

(e) Carefully install the slide pin into the sub-piston.

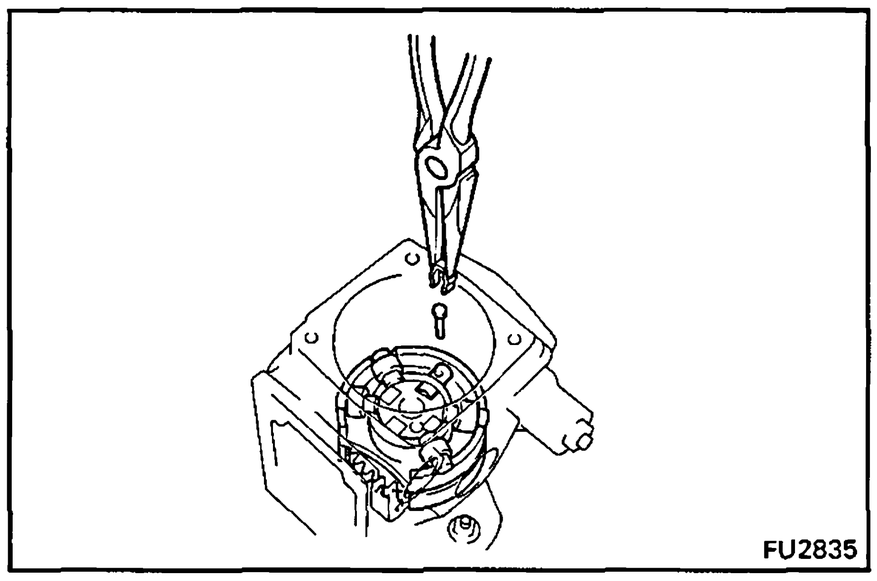

(e) Install the stopper pin and clip.

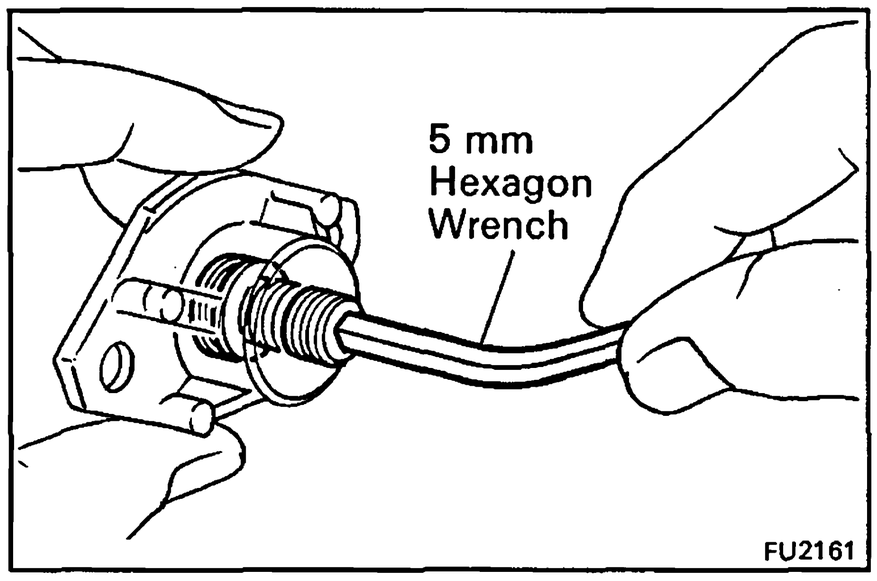

8. INSTALL TIMER SPRING

(a) Install a new O-ring to the timer adjusting screw.

(b) Using a 5 mm hexagon wrench, install the timer adjusting screw to the LH timer cover and temporarily install the nut.

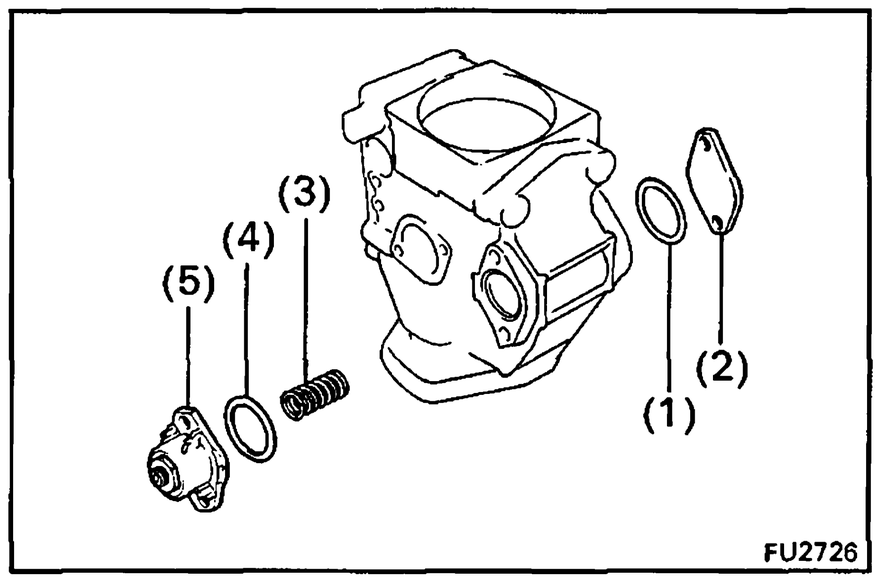

(c) Install the following parts:

(1) New O-ring
(2) RH timer cover
(3) Timer spring
(4) New O-ring
(5) LH timer cover, timer adjusting screw and nut assembly

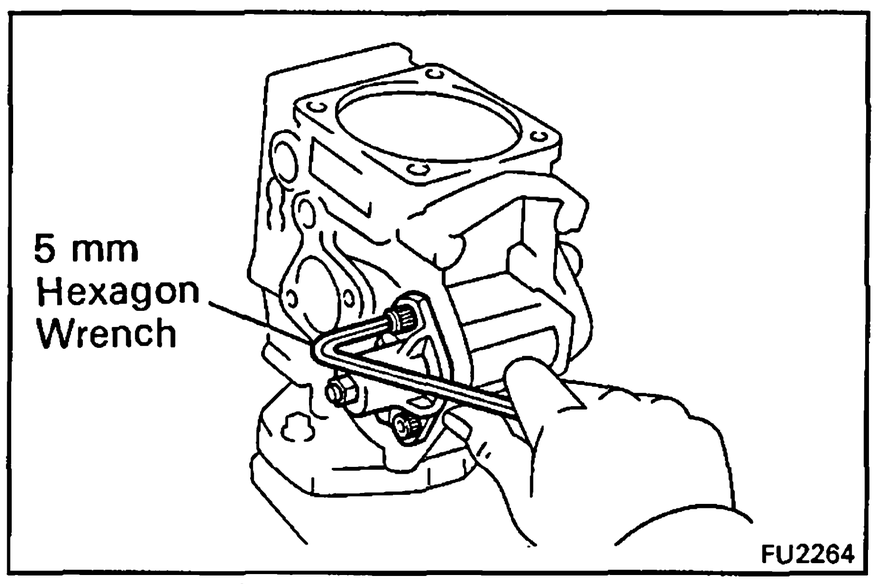

(d) Using a 5 mm hexagon wrench, install the the four bolts.

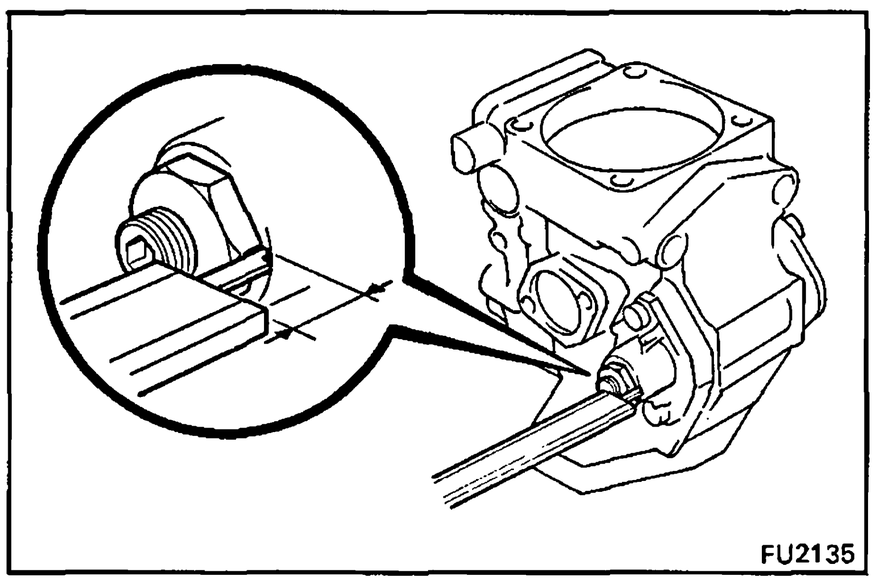

9. PRESET TIMER ADJUSTING SCREW

(a) Using vernier calipers, measure the protrusion of the adjusting screw from the timer cover.

Protrusion: 7.5 – 8.0 mm (0.295 – 0.315 in.)

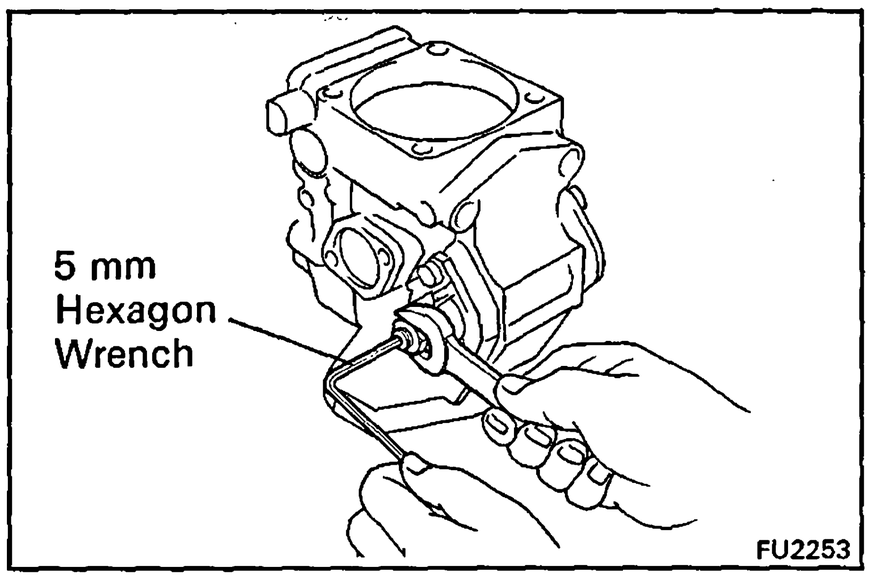

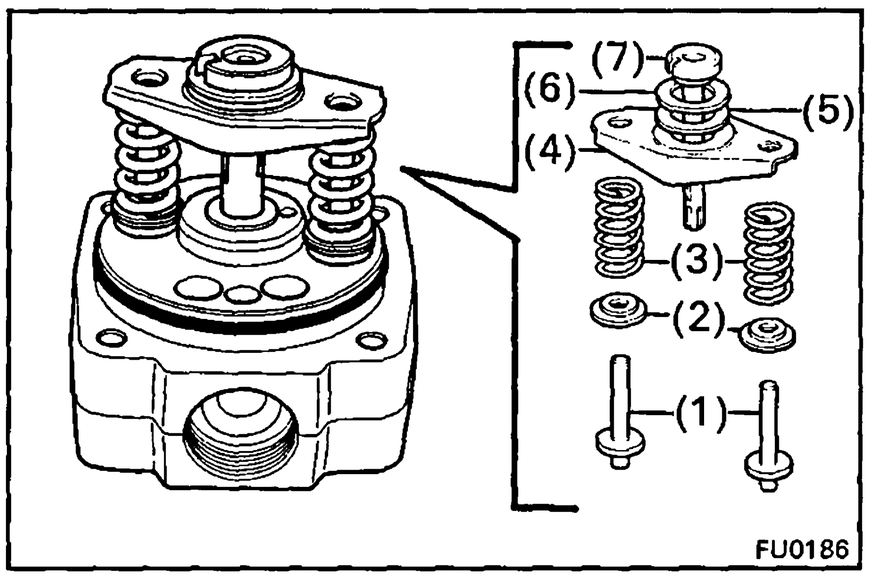

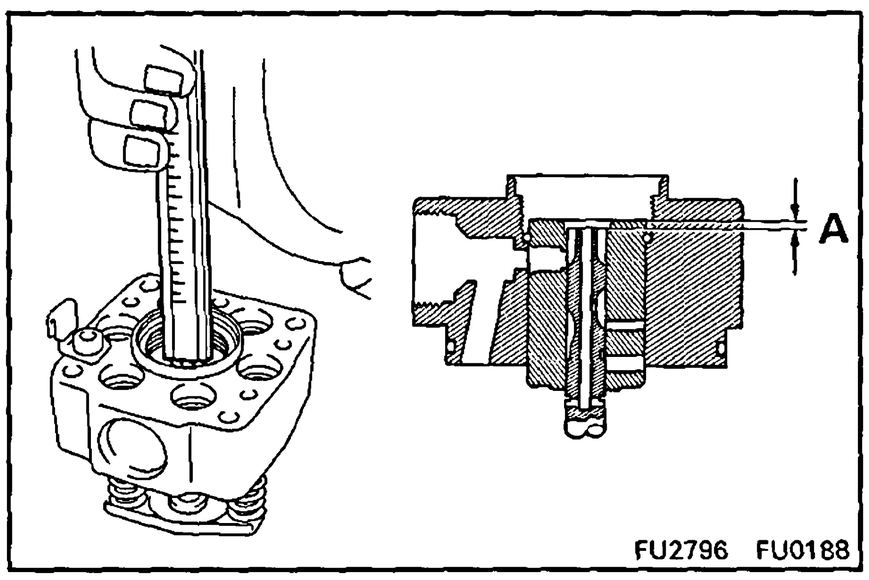

(b) Using a 5 mm hexagon wrench, adjust the protrusion of the adjusting screw from the timer cover.

10. ADJUST PLUNGER SPRING SHIM

(a) Install the following parts to the distributive head:

(1) Two plunger spring guides
(2) Two upper spring seats
(3) Two plunger springs
(4) Lower spring seat
(5) Upper plunger plate
(6) Lower plunger plate
(7) Pump plunger

HINT: Do not assemble the plunger spring shims at this time.

(b) Using vernier calipers, measure clearance A indicated in the illustration.

(c) Determine the plunger spring shim size by using the following formula and chart.

1PZ and 1HZ
New plunger spring shim thickness = 5.8 – A

1HD-T
New plunger spring shim thickness = 5.1 – A

A .... Measured plunger position

Plunger spring shim selection chart for 1PZ and 1HZ

mm (in.)

Measured clearance	Shim thickness	Measured clearance	Shim thickness
More than 5.3 (0.209)	0.5 (0.020)	4.3 – 4.5 (0.169 – 0.177)	1.5 (0.059)
5.0 – 5.2 (0.196 – 0.205)	0.8 (0.031)	4.0 – 4.2 (0.157 – 0.165)	1.8 (0.071)
4.8 – 4.9 (0.189 – 1.193)	1.0 (0.039)	Less than 3.9 (0.154)	2.0 (0.079)
4.6 – 4.7 (0.181 – 0.185)	1.2 (0.047)	–	–

Plunger spring shim selection chart for 1HD-T

mm (in.)

Measured clearance	Shim thickness	Measured clearance	Shim thickness
More than 4.6 (0.181)	0.5 (0.020)	3.6 – 3.8 (0.142 – 0.150)	1.5 (0.059)
4.3 – 4.5 (0.169 – 0.177)	0.8 (0.031)	3.3 – 3.5 (0.130 – 0.138)	1.8 (0.071)
4.1 – 4.2 (0.161 – 0.165)	1.0 (0.039)	Less than 3.2 (0.126)	2.0 (0.079)
3.9 – 4.0 (0.154 – 0.157)	1.2 (0.047)	–	–

HINT:
- For a measurement between listed sizes, use the next larger size. Ex. If thickness is 1.1 mm (0.043 in.) by calculation, use a 1.2 mm (0.047 in.) shim.
- Select two shims which have the same thickness.

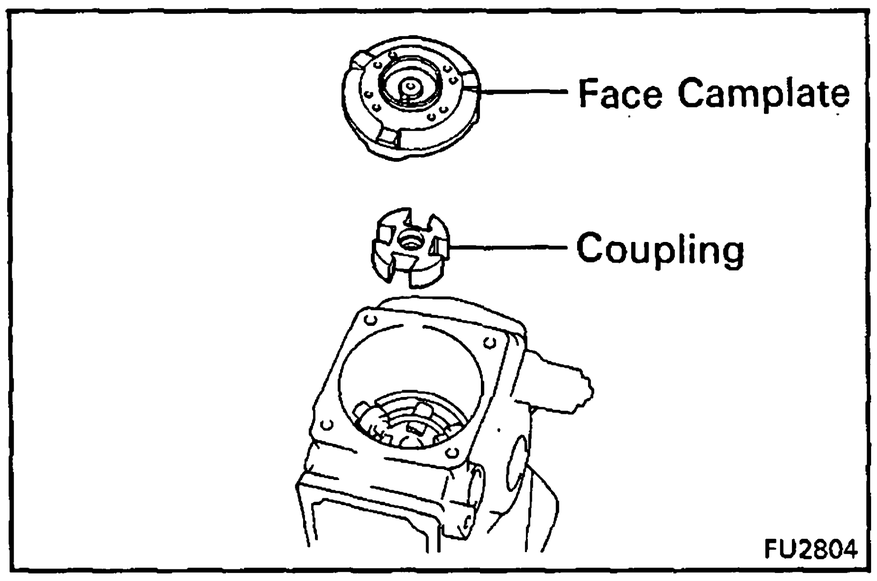

11. (1PZ only)
ADJUST PLUNGER ADJUSTING SHIM

(a) Install the coupling and face camplate.

HINT: Do not assemble the coupling spring.

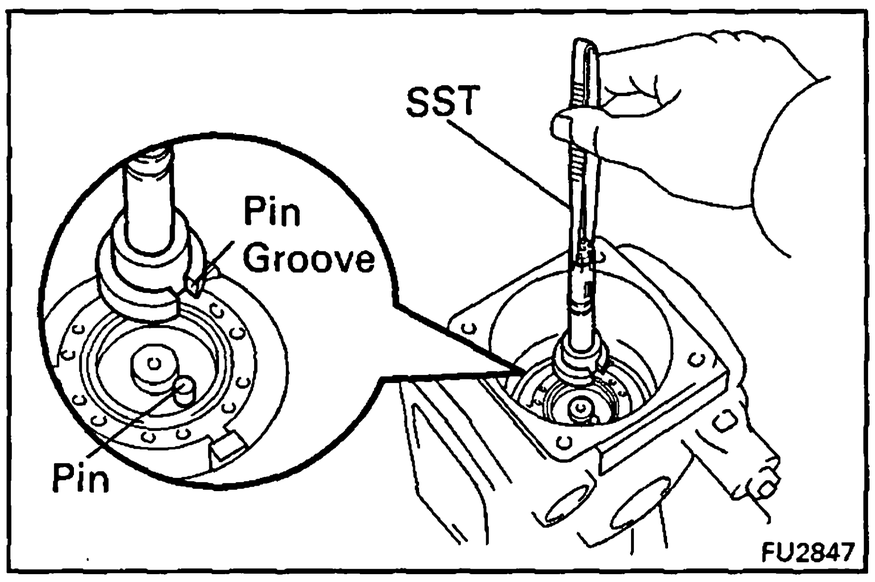

(b) Clean the plunger adjusting shim and contacting surface area.

(c) Align the pin groove of the pump plunger with the face camplate pin.

(d) Using SST, install the used plunger adjusting shim and pump plunger.

SST 09260-54012 (09269-54030)

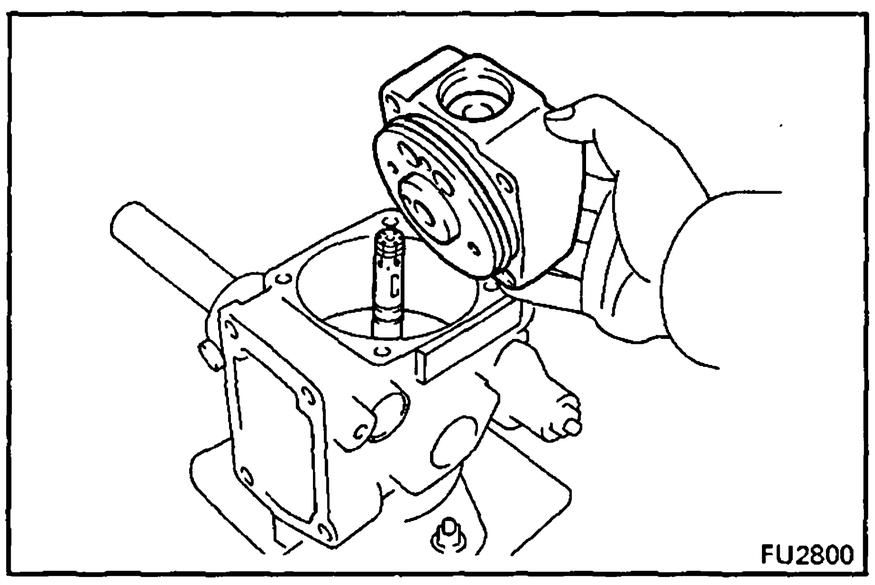

(e) Install the distributive head with the four bolts.

Torque: 120 kg-cm (9 ft-lb, 12 N·m)

NOTICE: Be careful not to damage the pump plunger.

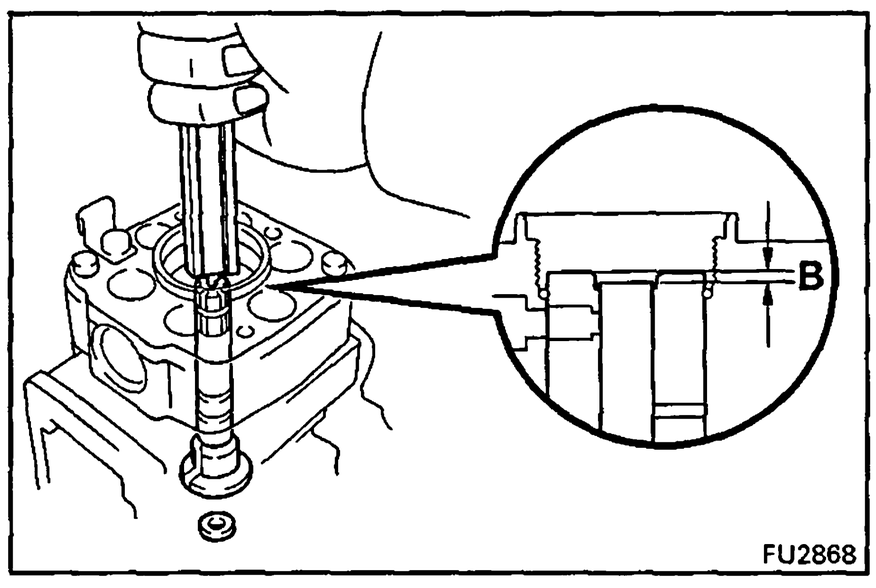

(f) Using vernier calipers, measure dimension B indicated in the illustration.

(g) Determine the plunger adjusting shim size by using the following formula and chart.

New adjusting shim thickness = T + (B – 3.3)
T ... Thickness of used shim
B ... Measured plunger position

Plunger adjusting shim selection chart

Installed shim mm	Measured clearance mm																			
	2.3	2.4	2.5	2.6	2.7	2.8	2.9	3.0	3.1	3.2 – 3.4	3.5	3.6	**3.7**	3.8	3.9	4.0	4.1	4.2	4.3	4.4
1.9											2.1	2.2	2.3	2.4	2.5	2.6	2.7	2.8	2.9	2.9
2.0									1.9		2.2	2.3	2.4	2.5	2.6	2.7	2.8	2.9	2.9	
2.1								1.9	1.9		2.3	2.4	2.5	2.6	2.7	2.8	2.9	2.9		
2.2							1.9	1.9	2.0		2.4	2.5	2.6	2.7	2.8	2.9	2.9			
2.3						1.9	1.9	2.0	2.1		2.5	2.6	2.7	2.8	2.9	2.9				
2.4					1.9	1.9	2.0	2.1	2.2		2.6	2.7	**2.8**	2.9	2.9					
2.5				1.9	1.9	2.0	2.1	2.2	2.3		2.7	2.8	2.9	2.9						
2.6			1.9	1.9	2.0	2.1	2.2	2.3	2.4		2.8	2.9	2.9							
2.7		1.9	1.9	2.0	2.1	2.2	2.3	2.4	2.5		2.9	2.9								
2.8	1.9	1.9	2.0	2.1	2.2	2.3	2.4	2.5	2.6		2.9									
2.9	1.9	2.0	2.1	2.2	2.3	2.4	2.5	2.6	2.7											

Plunger adjusting shim thickness mm (in.)	1.9 (0.075)	2.0 (0.079)	2.1 (0.083)	2.2 (0.087)	2.3 (0.091)	2.4 (0.094)	2.5 (0.098)	2.6 (0.102)	2.7 (0.106)	2.8 (0.110)	2.9 (0.114)

EXAMPLE: The 2.4 mm (0.094 in.) shim is installed and measured clearance is 3.7 mm (0.146 in.). Replace the 2.4 mm (0.094 in.) shim with a 2.8 mm (0.110 in.) shim.

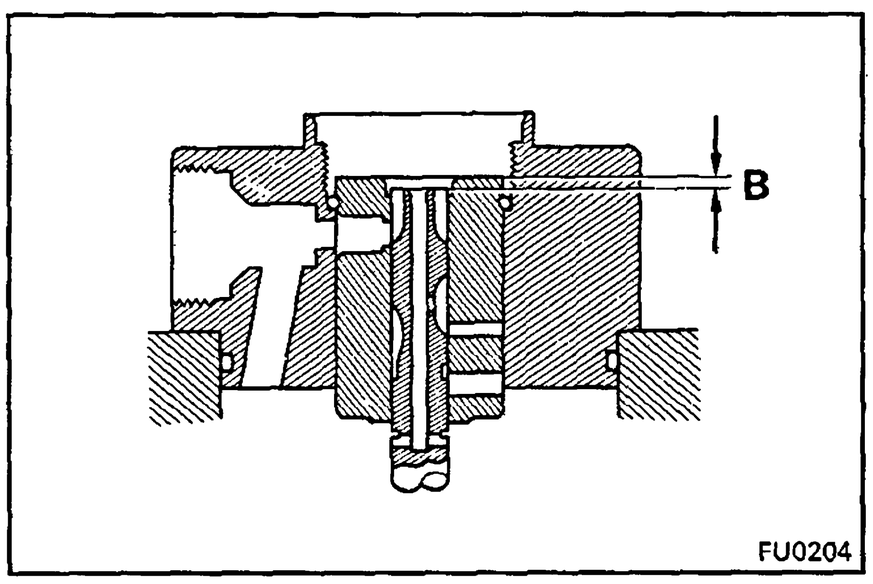

(h) Install a new plunger adjusting shim and recheck dimension B.

Dimension B: 3.2 – 3.4 mm (0.126 – 0.134 in.)

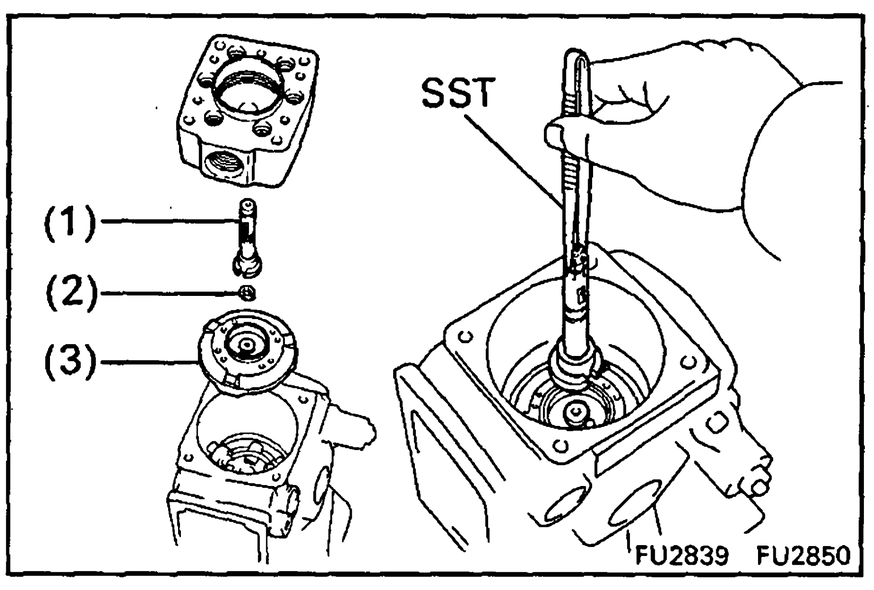

(i) Remove the distributive head.

(j) Using SST, remove the following parts:
  (1) Pump plunger
  (2) Plunger adjusting shim
  (3) Face camplate

SST 09260-54012 (09269-54030)

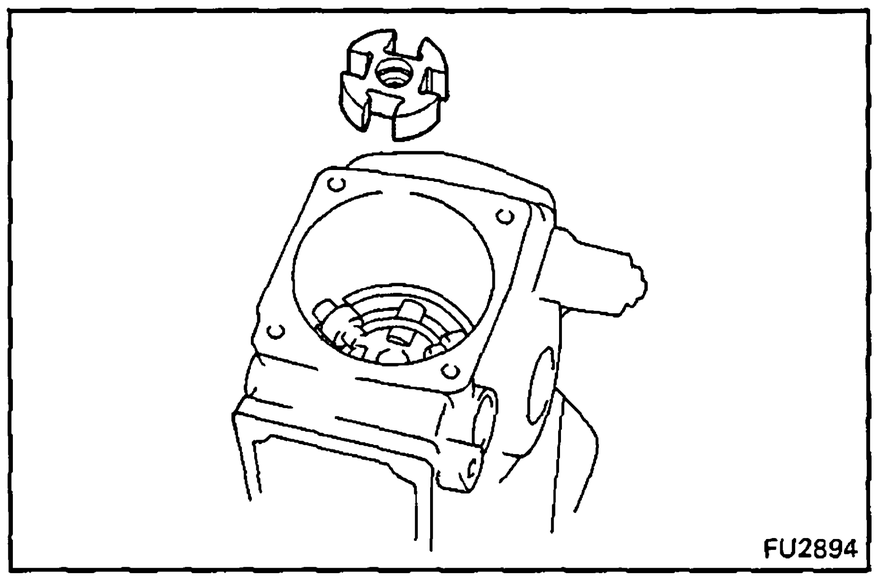

12. (1HZ and 1HD-T) INSTALL COUPLING

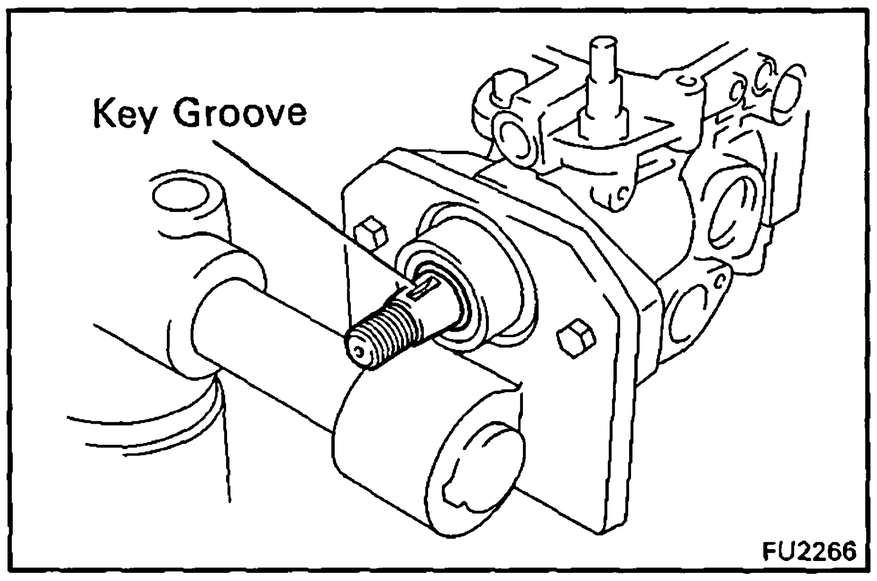

13. INSTALL FACE CAMPLATE

(a) Face the drive shaft with the key groove facing upward.

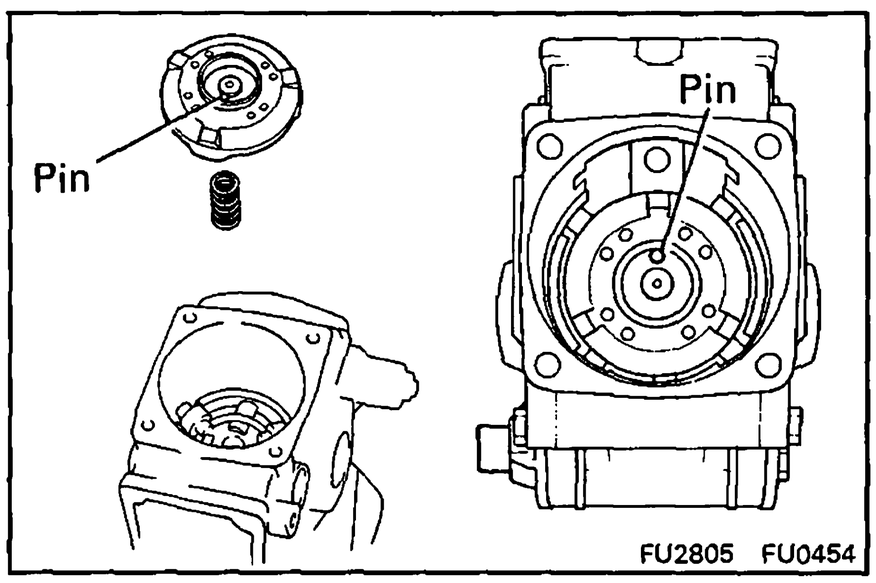

(b) Install the coupling spring and camplate with the camplate pin facing the governor cover side.

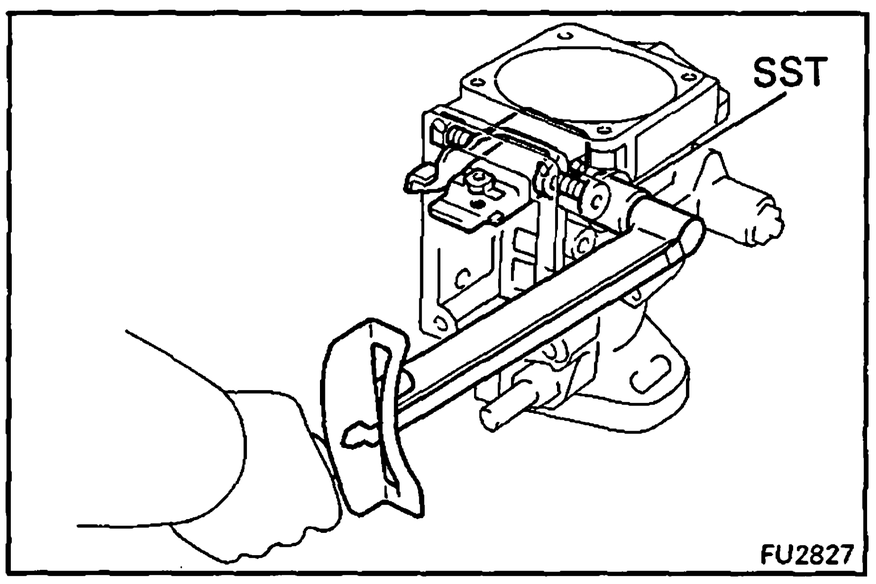

14. INSTALL GOVERNOR LINK

(a) Using SST, install the governor link with two new gaskets and the two support bolts.

Torque: 140 kg-cm (10 ft-lb, 14 N·m)

SST 09260-54012 (09269-54040)

(b) Check that the governor link moves smoothly.

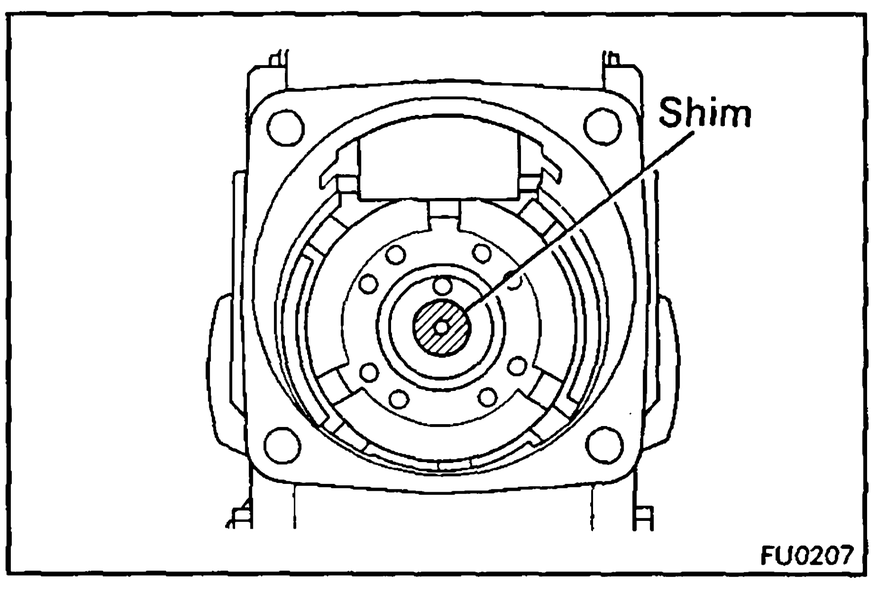

15. INSTALL PUMP PLUNGER

(a) (1PZ)
Place the previously used plunger adjusting shim on center of the camplate.

(1HZ and 1HD-T)
Place the previously used plunger adjusting shim on the center of the camplate.

NOTICE: Do not apply grease to the shim.

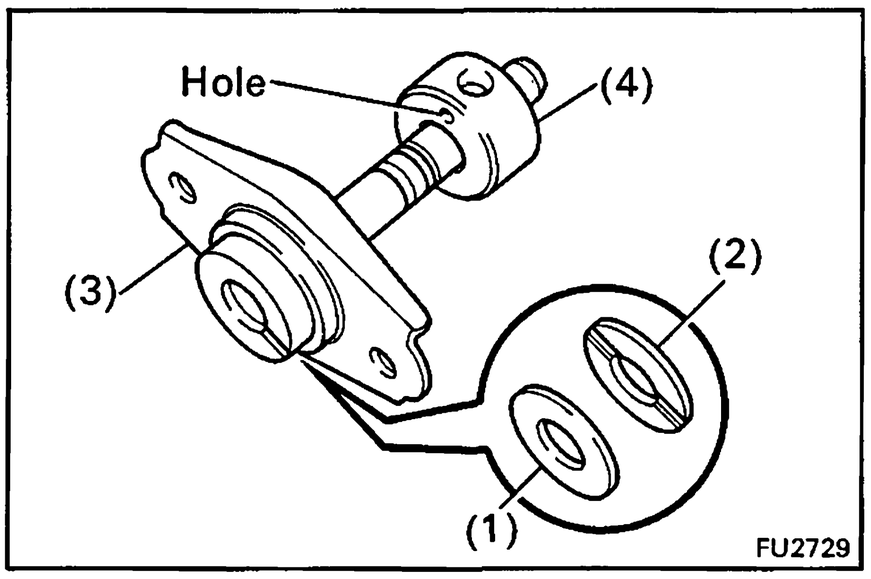

(b) Install the following parts to the pump plunger:
  (1) Lower plunger plate
  (2) Upper plunger plate
  (3) Lower spring seat
  (4) Spill ring

HINT: Face the spill ring with the hole facing the lower spring seat.

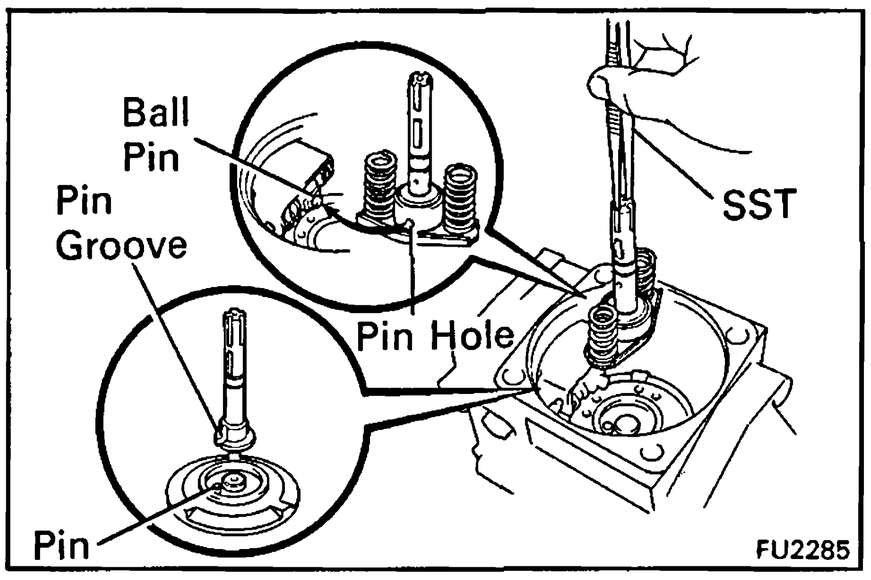

(c) Align the pin groove of the plunger with the pin of the face camplate.

(d) Align the ball pin of the governor link with the pin hole of the spill ring.

(e) Using SST, install the pump plunger and two plunger springs.

SST 09260-54012 (09269-54030)

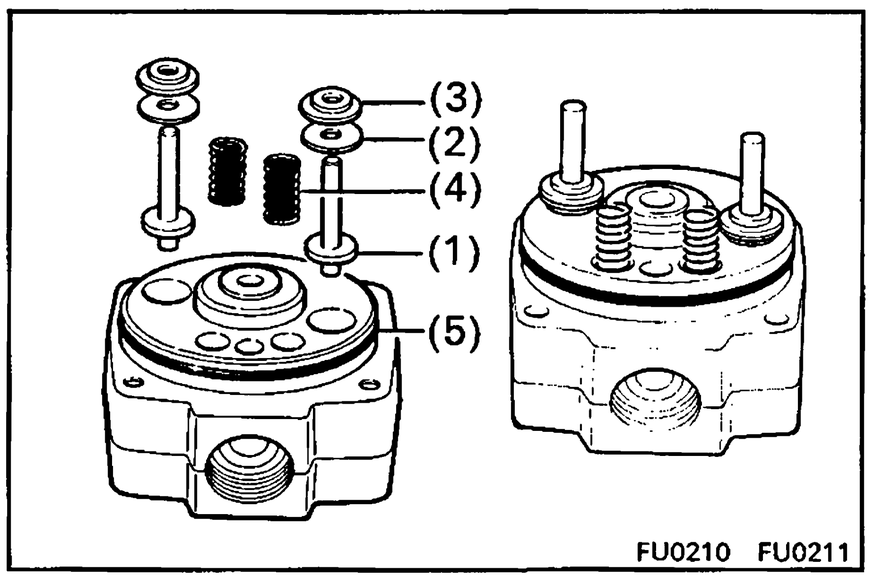

16. INSTALL DISTRIBUTIVE HEAD

(a) Apply No.50 DENSO grease to the following parts and install them to the distributive head:
  (1) Two plunger spring guides
  (2) Two new selected plunger spring shims
  (3) Two upper spring seats
  (4) Two lever support springs
  (5) New O-ring

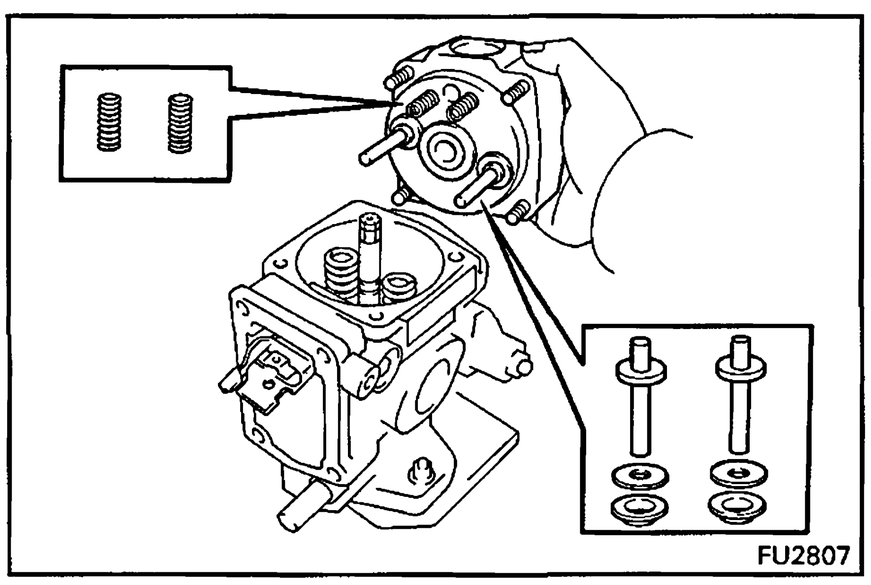

(b) Install the distributive head.

NOTICE: Be careful not to damage the pump plunger.

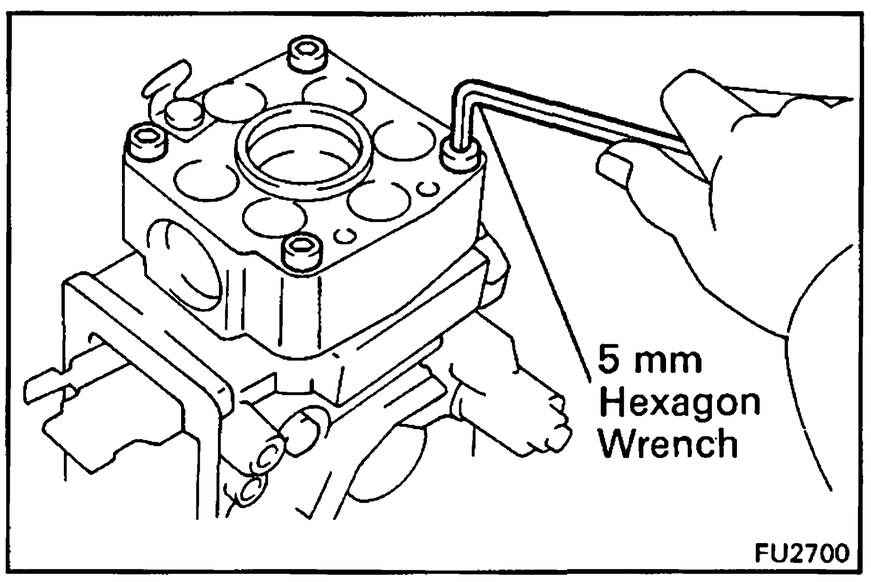

(c) Using 5 mm hexagon wrench, install the four bolts.

Torque: 120 kg-cm (9 ft-lb, 12 N·m)

HINT: Use the bolt which is 45 mm (1.77 in.) in length.

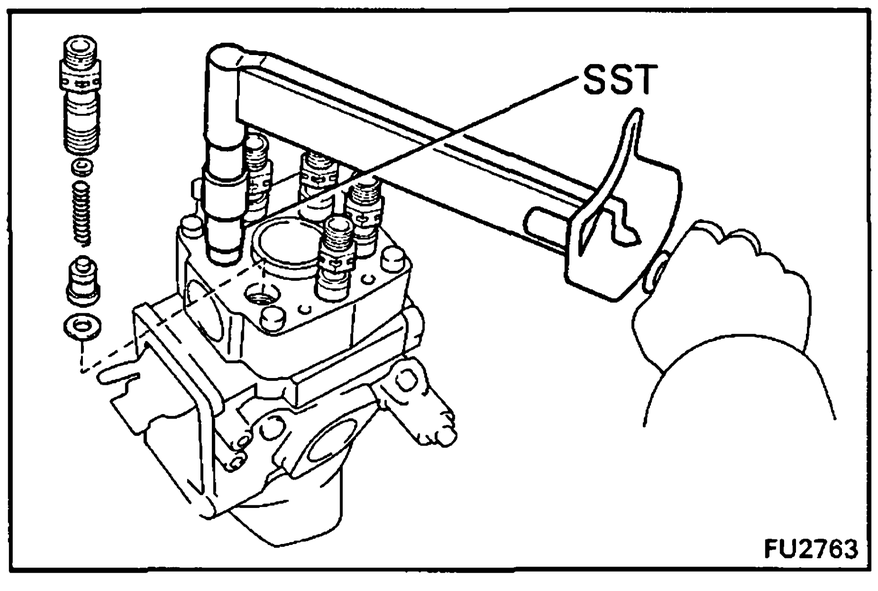

17. INSTALL DELIVERY VALVE HOLDERS

(a) Install new gaskets and the valves into the distributive head.

(b) Install the spring seats and springs into the delivery valve holders.

(c) Using SST, install the delivery valve holders.

SST 09260-54012 (09269-54020)

Torque:

1PZ and 1HZ	**500 kg-cm (36 ft-lb, 49 N·m)**
1HD-T	**550 kg-cm (40 ft-lb, 54 N·m)**

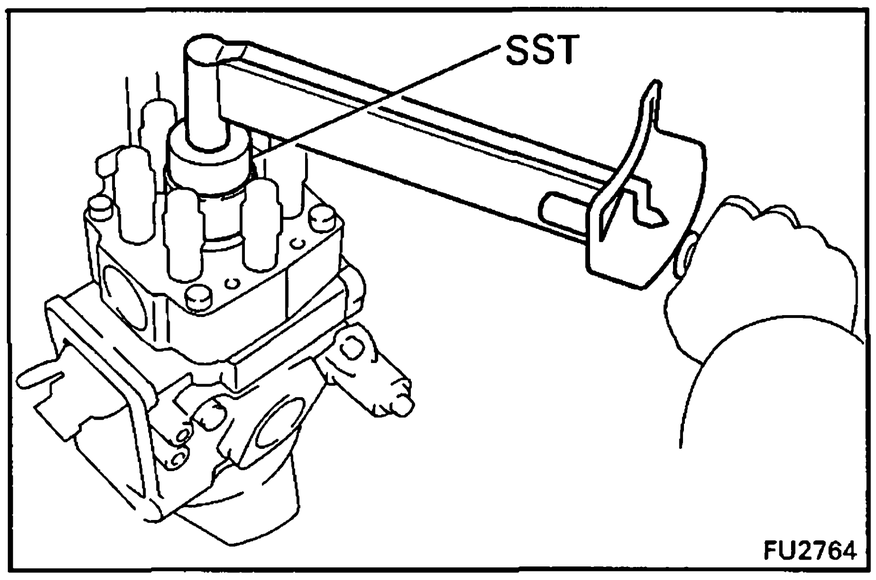

18. (1PZ only) INSTALL DISTRIBUTIVE HEAD PLUG

(a) Install a new O-ring to the head plug.

(b) Using SST, install the head plug.

SST 09260-54012 (09262-54010)

Torque: 700 kg-cm (51 ft-lb, 69 N·m)

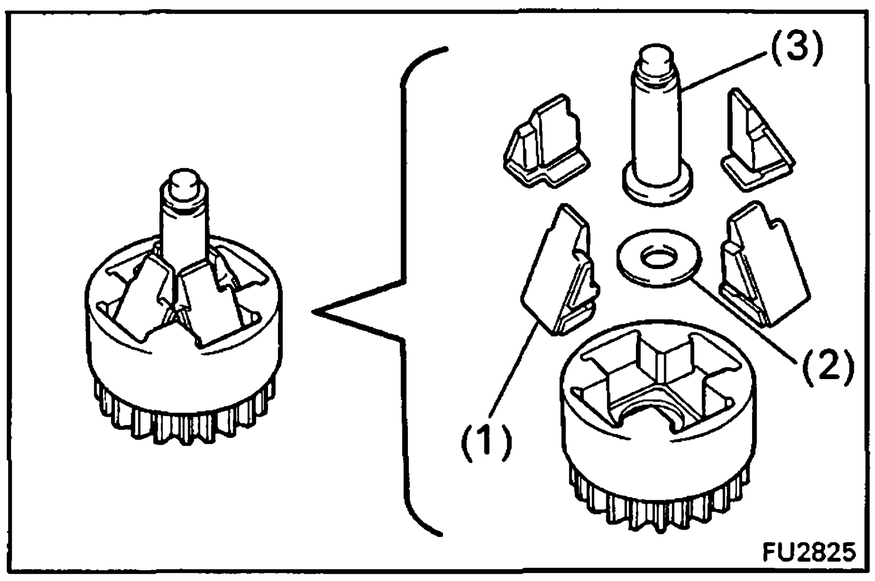

19. INSTALL GOVERNOR SHAFT AND FLYWEIGHT HOLDER

(a) Install the following parts to the flyweight holder:

(1) Four flyweight

(2) No.2 flyweight washer

(3) Governor sleeve

HINT: Replace the four flyweights as a set.

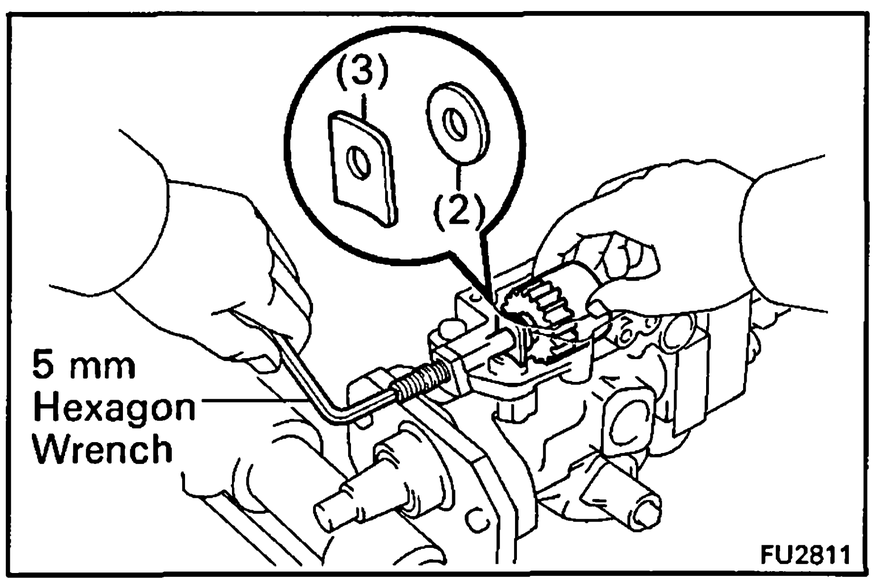

(b) Install a new O-ring to the governor shaft.

(c) Place the flyweight holder assembly (1) in position, and install the No.1 flyweight washer (2) and governor gear adjusting washer (3) between the flyweight holder and pump housing.

(d) Install the governor shaft through the governor gear adjusting washer, No.1 flyweight washer and flyweight holder assembly.

(e) Using a 5 mm hexagon wrench, turn the governor shaft counterclockwise.

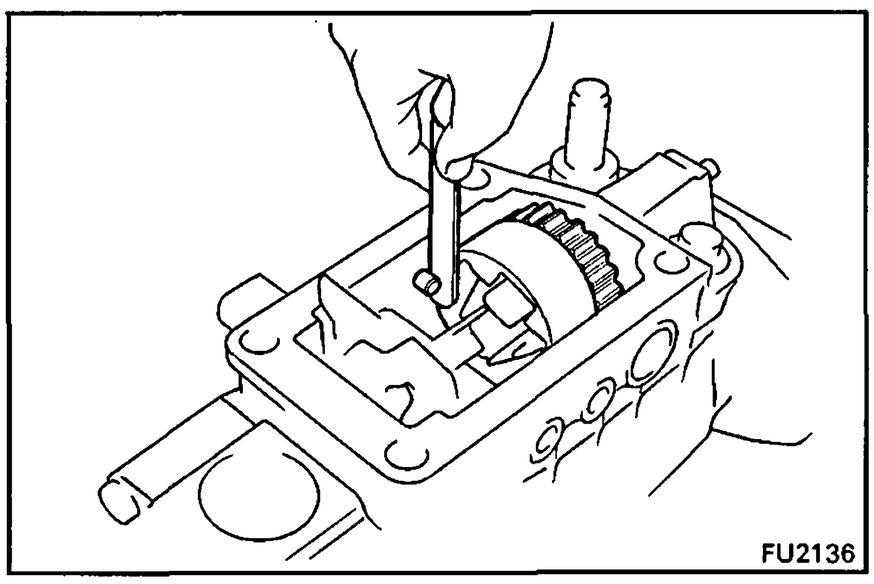

20. CHECK FLYWEIGHT HOLDER THRUST CLEARANCE

Using a thickness gauge, measure the thrust clearance between the housing pin and flyweight holder.

Thrust clearance: 0.15 – 0.35 mm (0.0059 – 0.0138 in.)

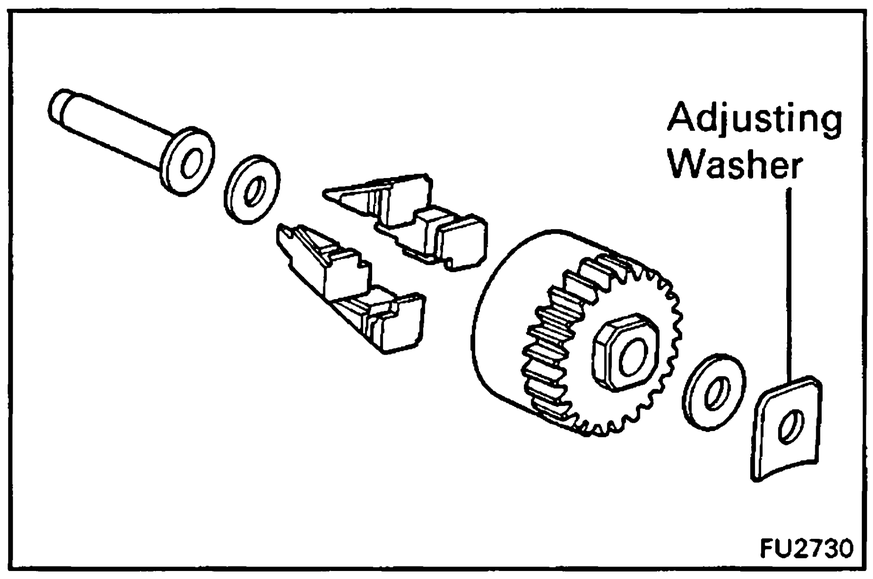

If the thrust clearance is not as specified, adjust with a governor gear adjusting washer.

Governor gear adjusting washer thickness:
1.05 mm (0.0413 in.)
1.25 mm (0.0492 in.)
1.45 mm (0.0571 in.)
1.65 mm (0.0650 in.)
1.85 mm (0.0728 in.)

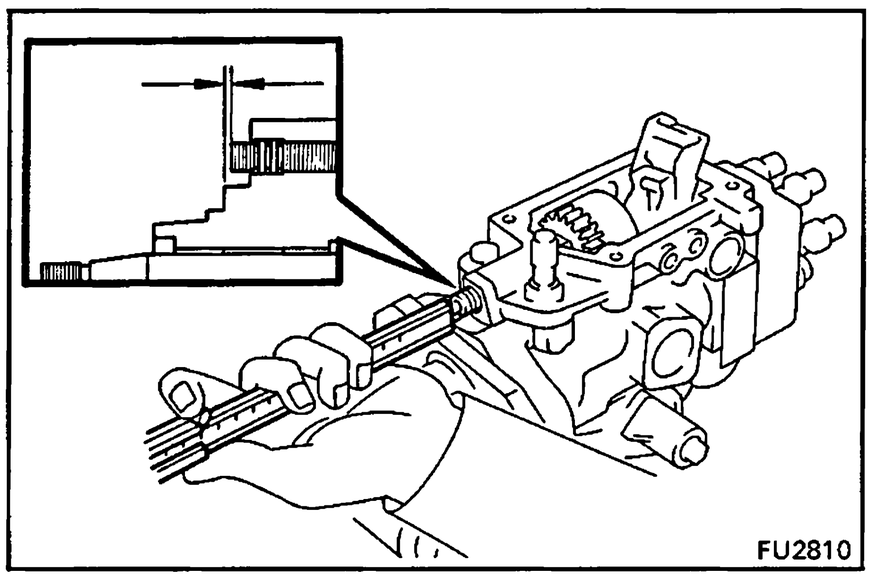

21. ADJUST PROTRUSION OF GOVERNOR SHAFT

(a) Using vernier calipers, measure the protrusion of the governor shaft.

Protrusion: 0.5 – 2.0 mm (0.020 – 0.079 in.)

If the protrusion is not as specified, adjust by turning the governor shaft.

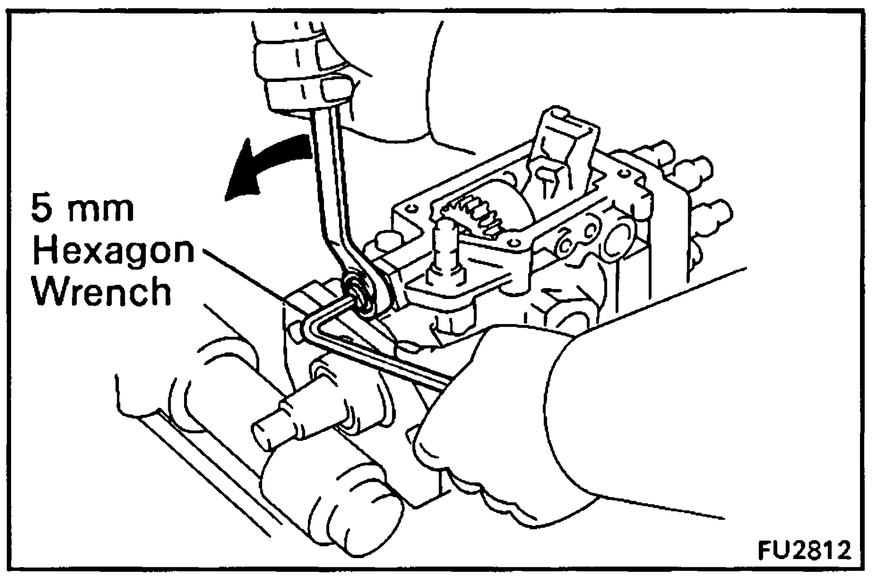

(b) Install and tighten the nut while holding the governor shaft with a 5 mm hexagon wrench.

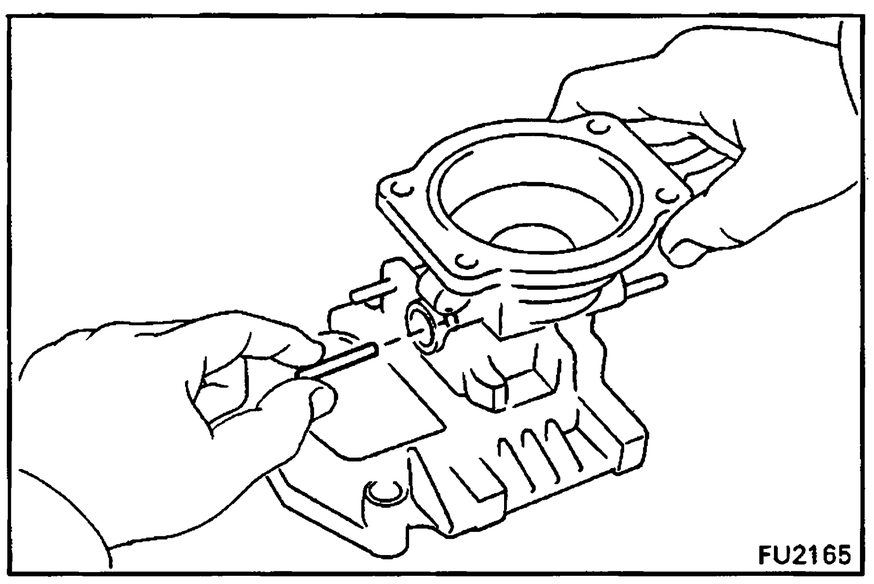

22. (1PZ (w/ HAC) and 1HZ (w/ HAC)) ASSEMBLE HIGH ALTITUDE COMPENSATOR

Install control lever

(a) Insert the connecting pin into governor cover.

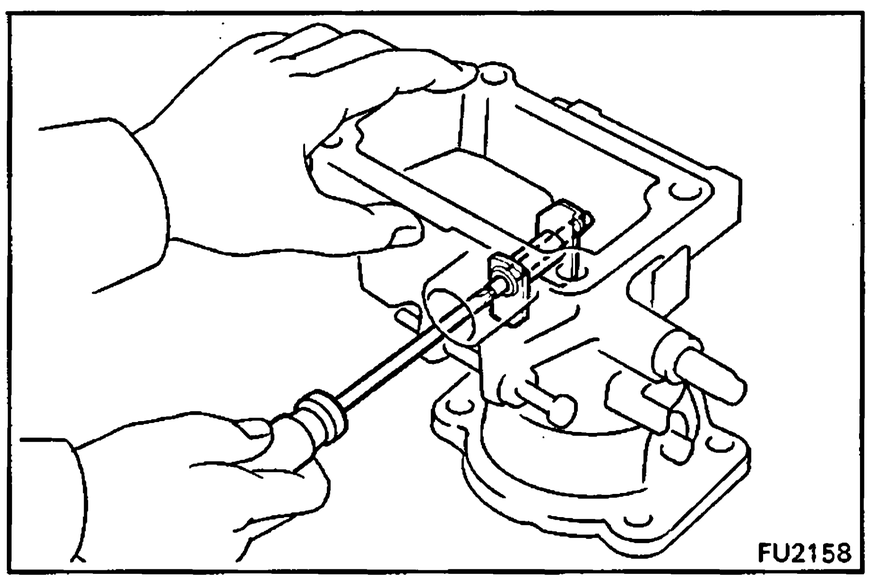

(b) Using a small screwdriver, install the control lever with the support pin.

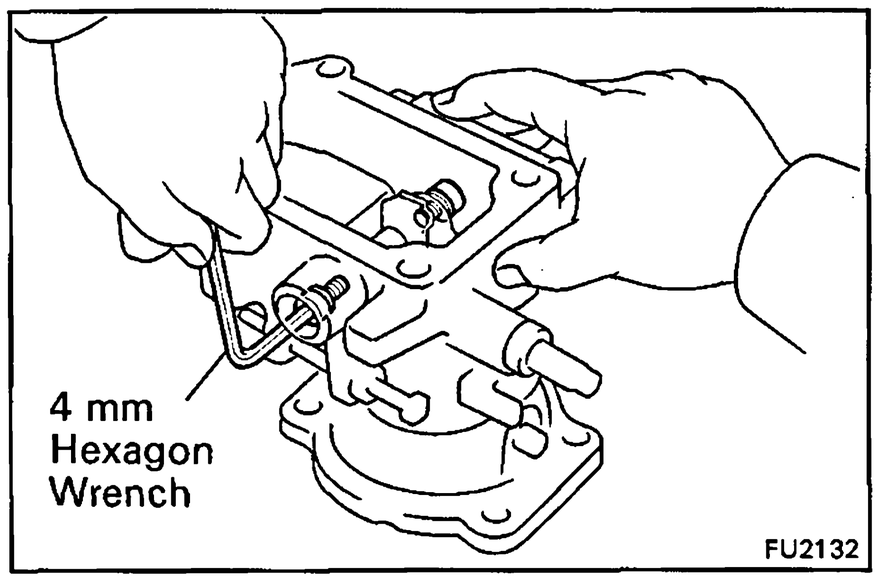

(c) Using a 4 mm hexagon wrench, install two new gaskets and the two bolts.

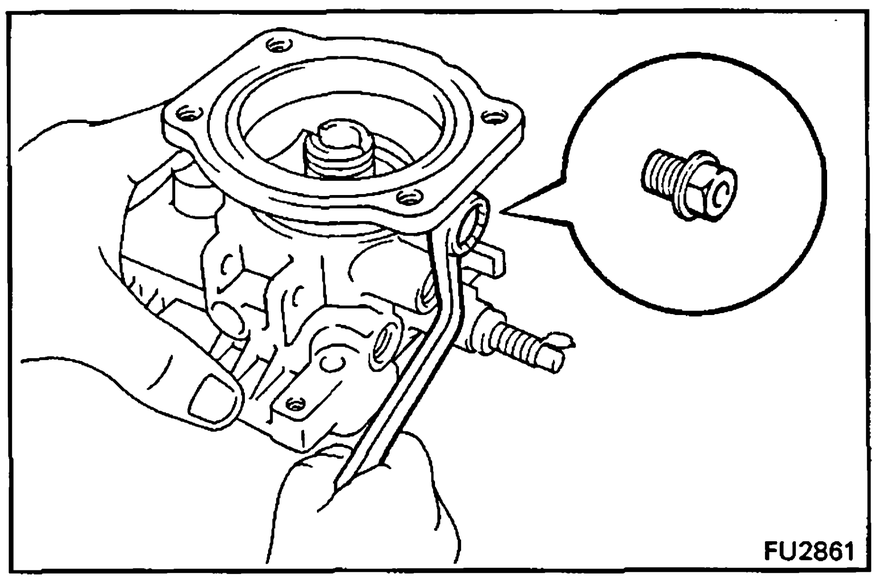

23. (1HD-T)
ASSEMBLE BOOST COMPENSATOR

A. Install No.2 overflow screw

Install the No.2 overflow screw and cover.

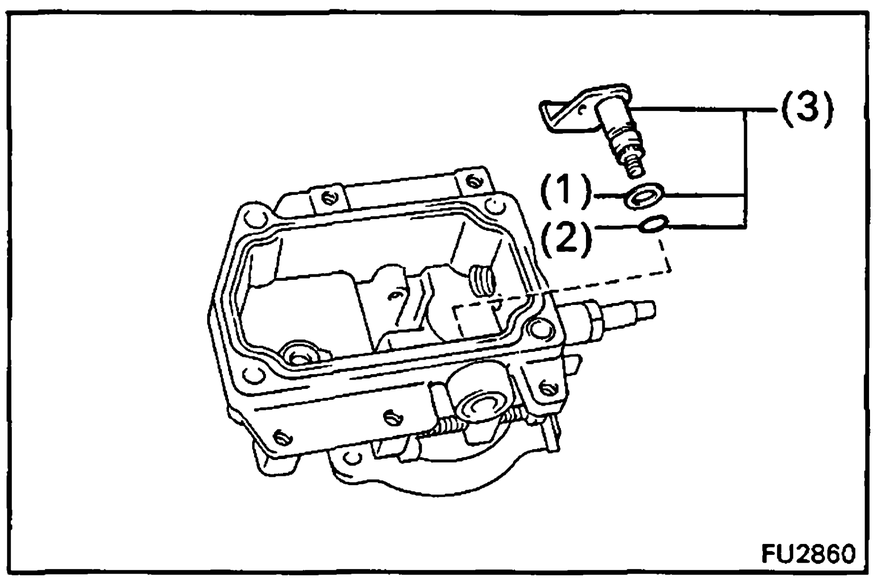

B. Install No.2 PCS lever

Install the following parts to the governor cover:

(1) Plate washer
(2) O-ring
(3) No.2 lever, O-ring and washer assembly

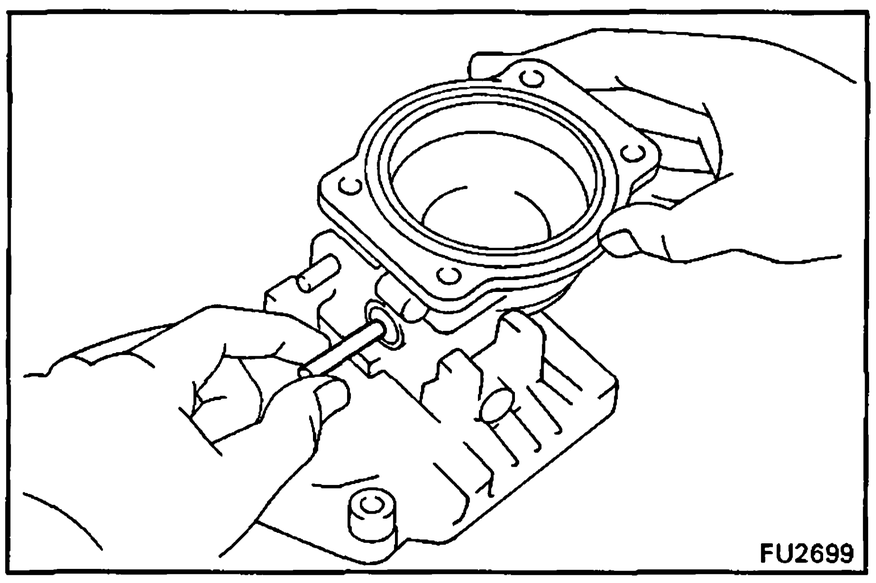

C. Install control lever

(a) Insert the connecting pin into governor cover.

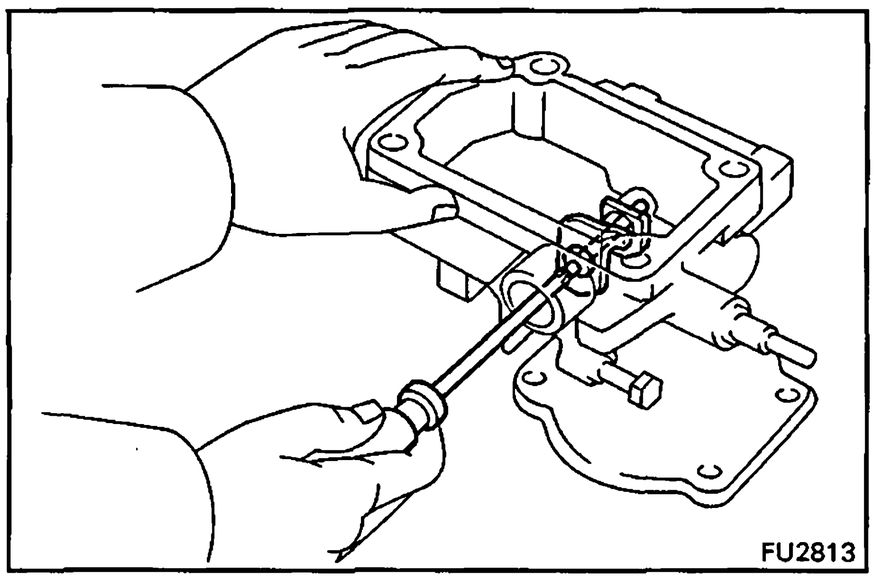

(b) Using a small screwdriver, install the control lever with the support pin.

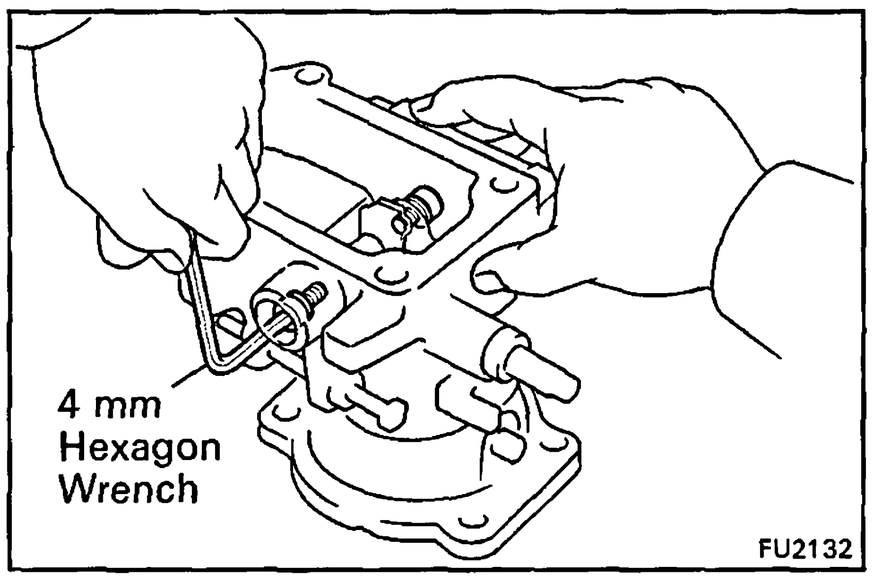

(c) Using a 4 mm hexagon wrench, install two new gaskets and the two bolts.

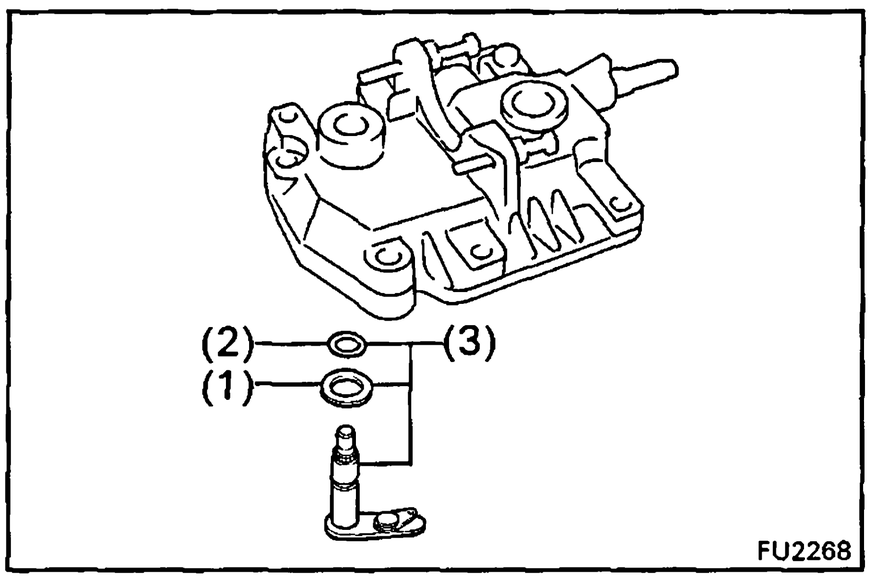

24. INSTALL ADJUSTING LEVER SHAFT TO GOVERNOR SHAFT

Install the following parts to the governor cover:

(1) Plate washer

(2) New O-ring

(3) Adjusting lever shaft, O-ring and plate washer assembly

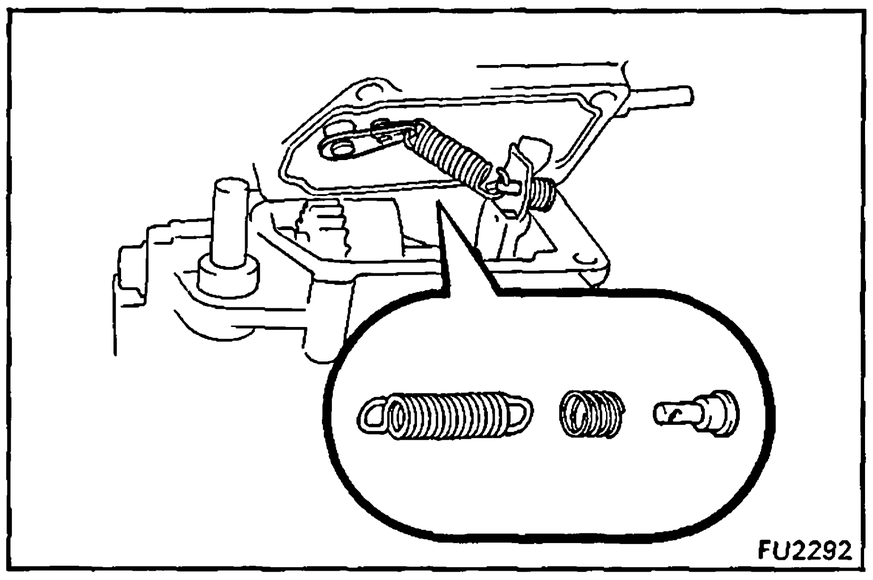

25. INSTALL GOVERNOR COVER

(a) Install the speed control spring to the adjusting shaft.

(b) Install a new gasket to the groove of the governor cover.

(c) Install the damper spring and spring seat, and connect the speed control spring to the spring seat.

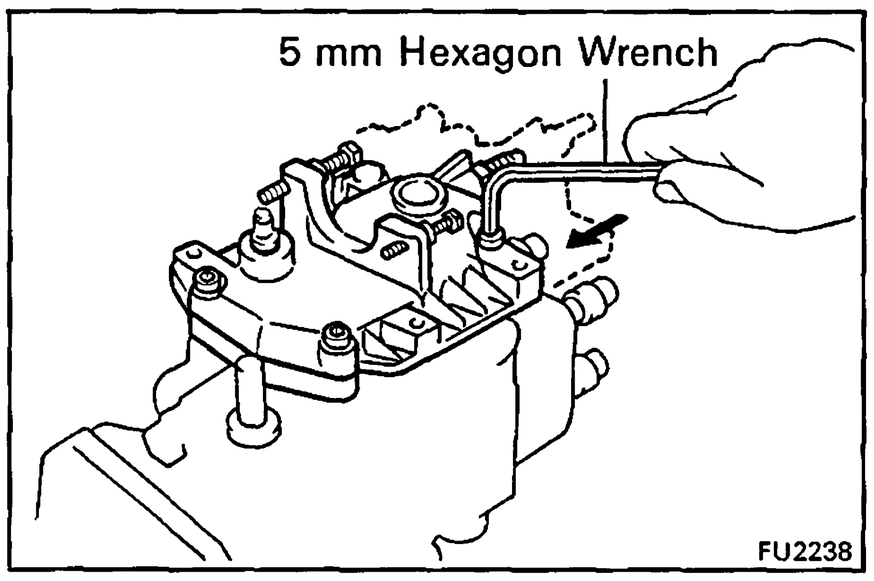

(d) Using a 5 mm hexagon wrench, install the governor cover with the four bolts.

Torque: 85 kg-cm (74 in.-lb, 8.3 N·m)

HINT: Use the bolt which is 35 mm (1.38 in.) in length.

(e) (w/ HAC and 1HD-T)
Install the idle speed adjusting screw.

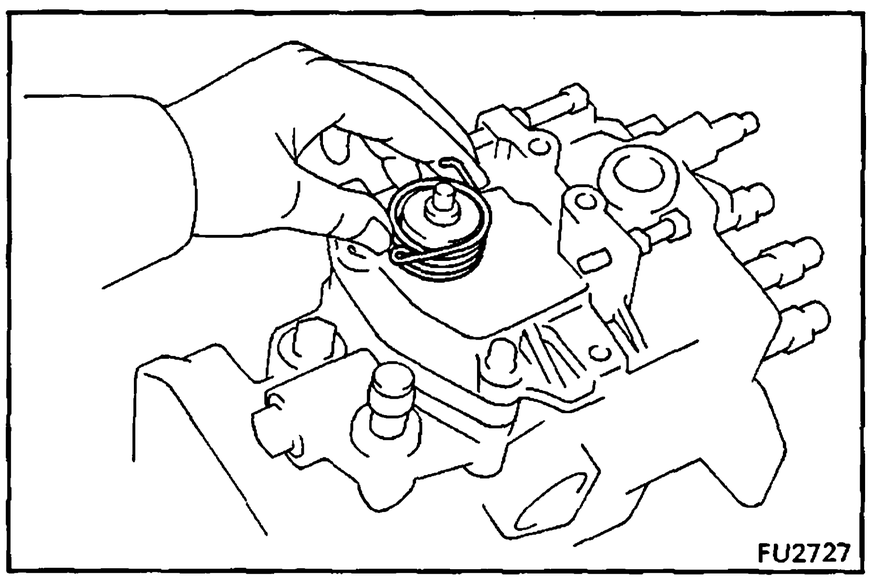

26. INSTALL ADJUSTING LEVER

(a) Place the return spring on the governor cover.

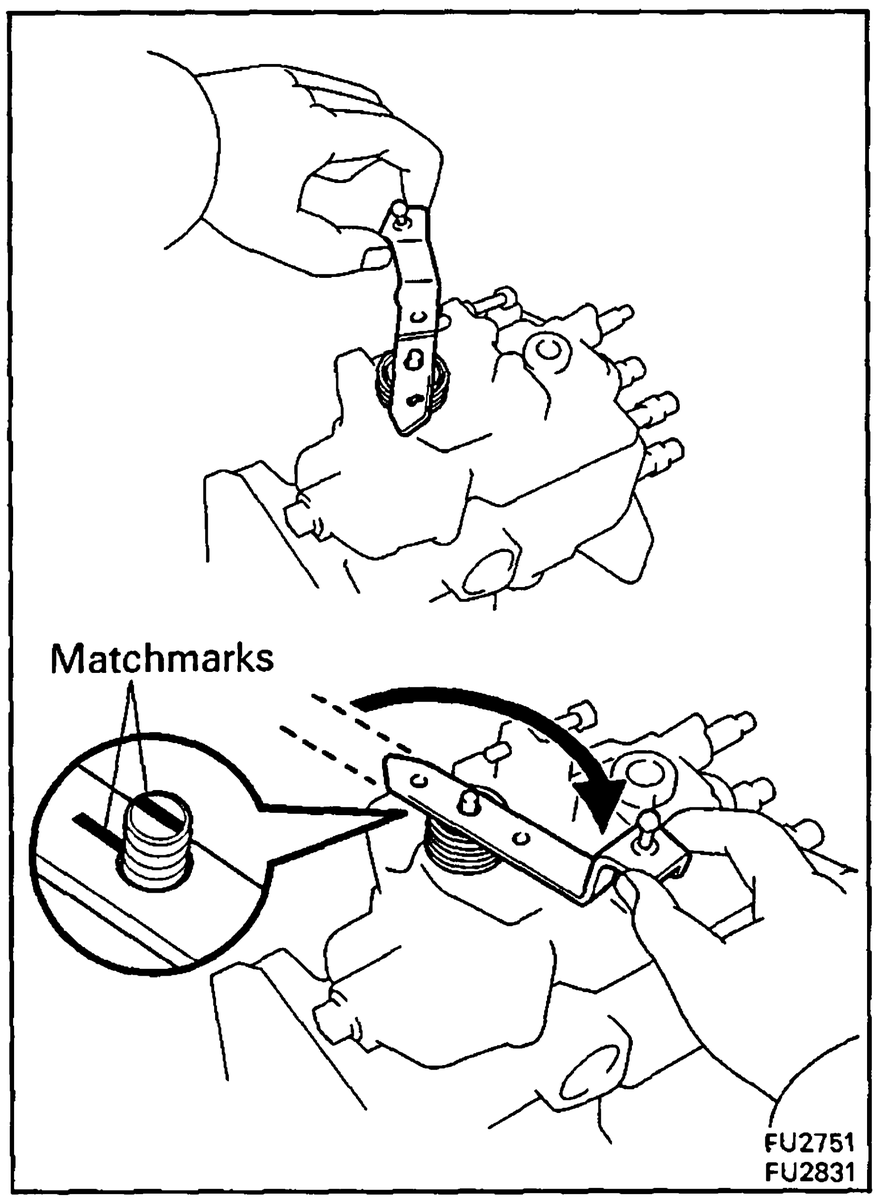

(b) Hook the return spring to the adjusting lever, and turn and place the adjusting lever on the governor shaft.

(c) Align the lines of the adjusting lever shaft and adjusting lever.

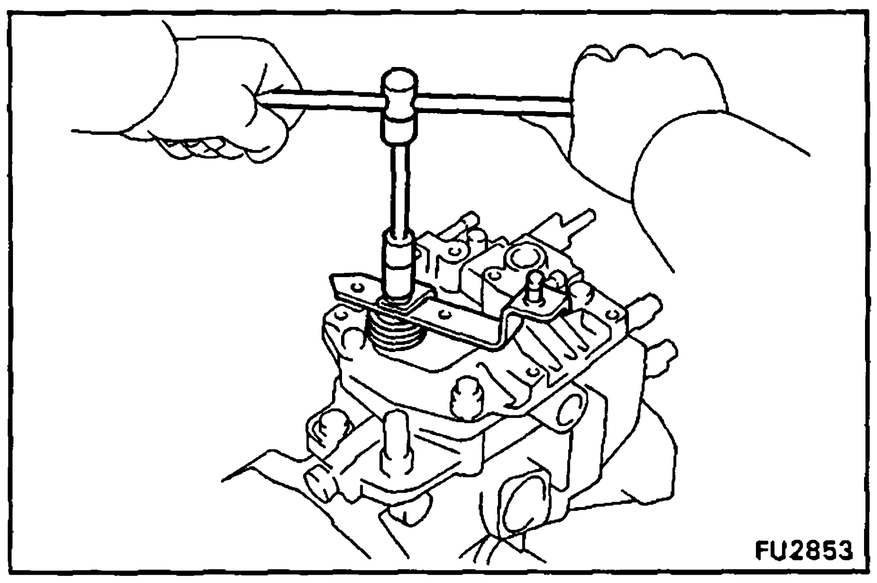

(d) Install the adjusting lever with the spring guide and nut.

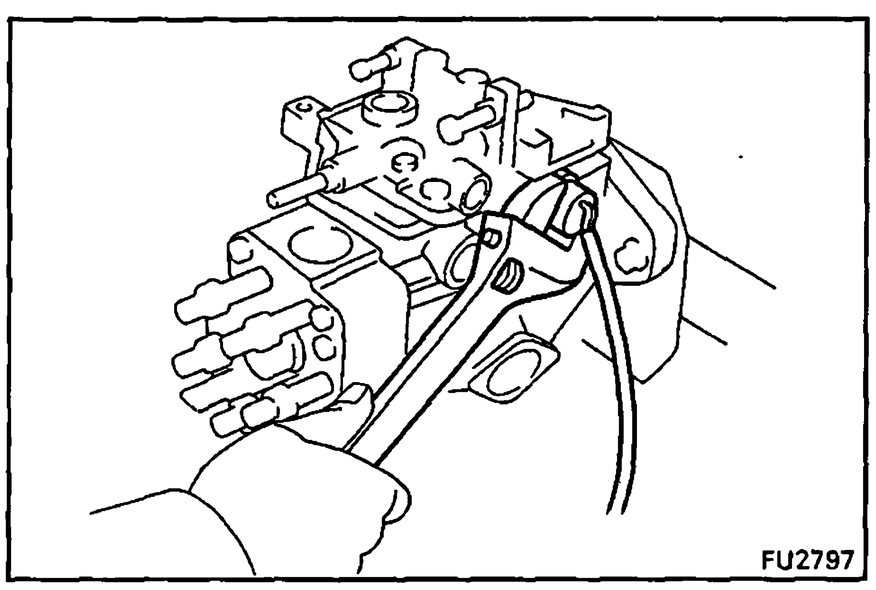

27. (w/ TACHOMETER)
INSTALL PICKUP SENSOR

(a) Install a new O-ring and pickup sensor.

(b) Connect the two lead wires to the connector.

Torque: 210 kg-cm (15 ft-lb, 21 N·m)

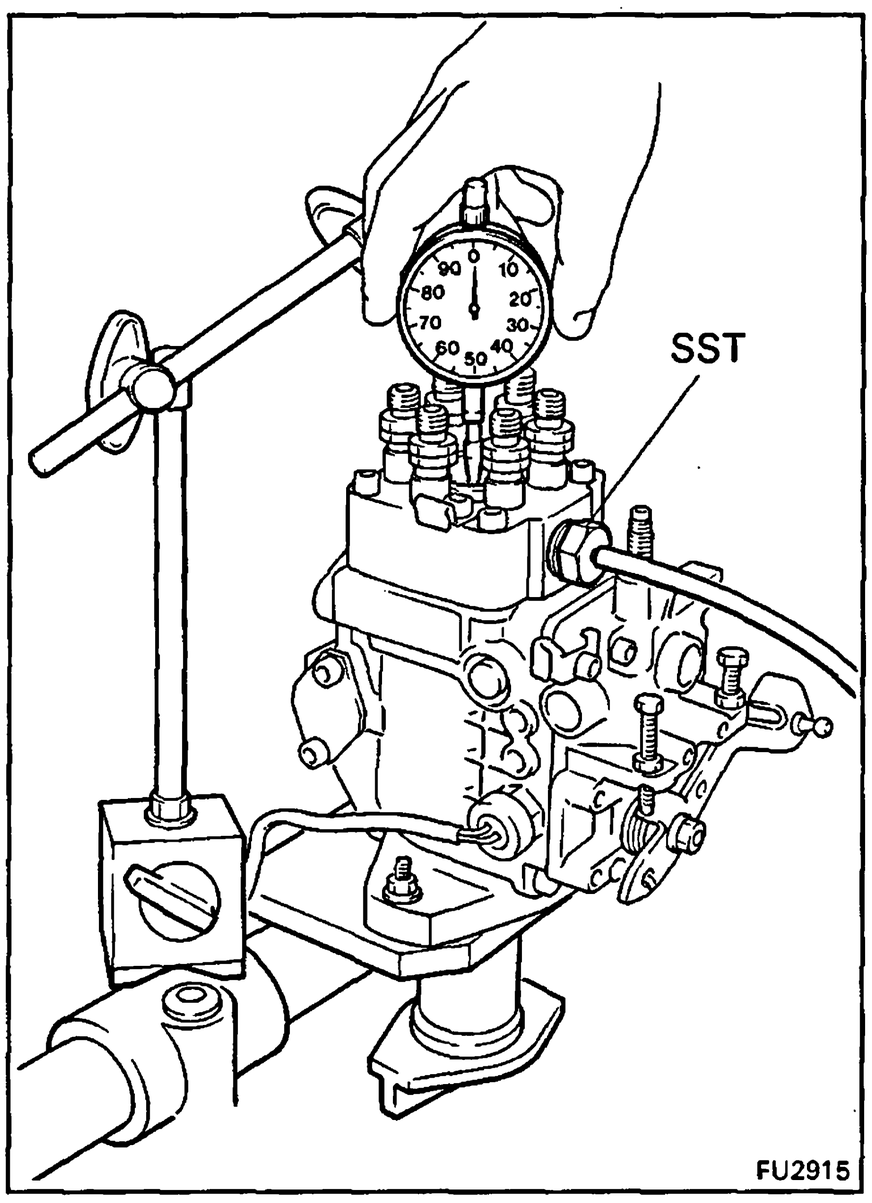

28. (1HZ and 1HD-T only)
ADJUST PLUNGER PRE-STROKE

(a) Install SST to the fuel cut solenoid installation screw section.

SST 09275-17010

(b) Set the dial indicator so that the tip of the dial indicator push rod touches the upper surface of the plunger.

(c) Rotate the drive shaft, set the plunger to BDC and set the scale on the dial indicator to 0 mm (0 in.)

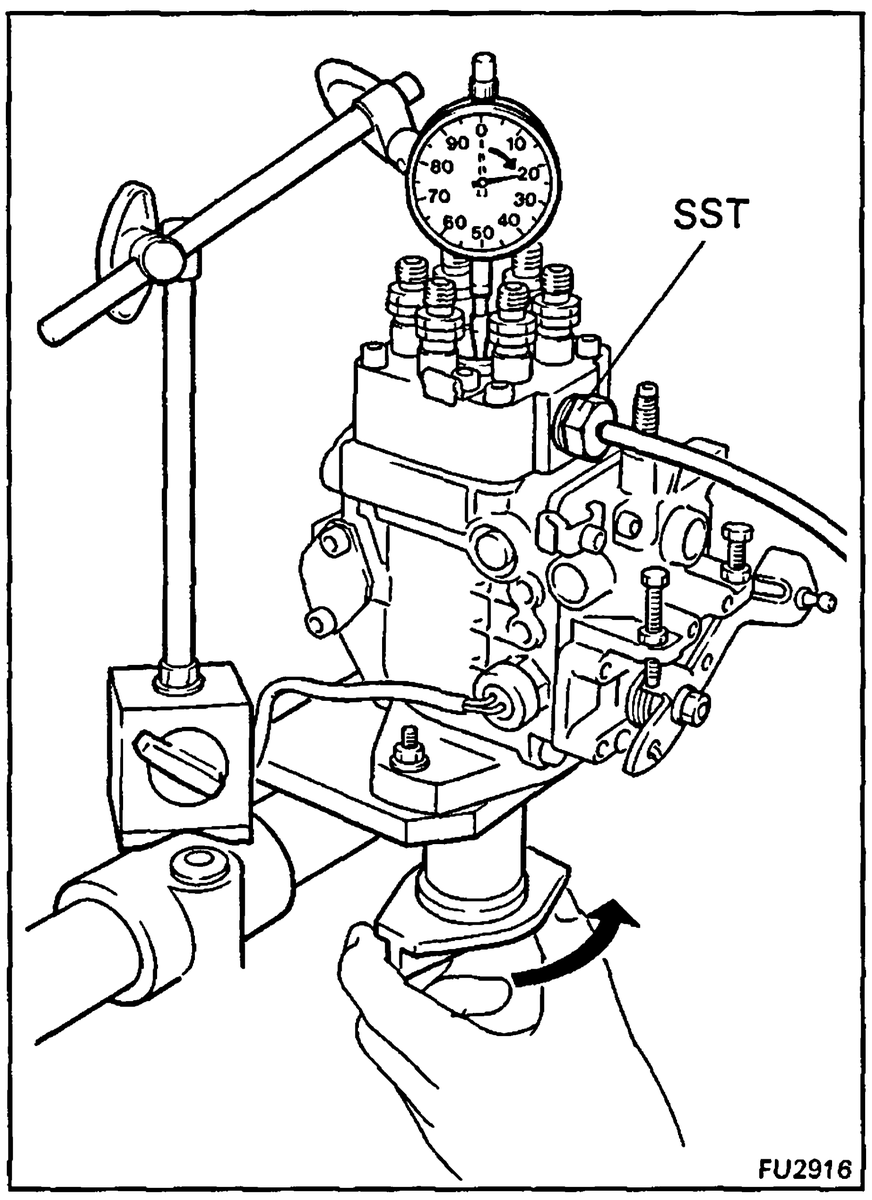

(d) Apply a few drops of light oil (diesel fuel) to the top surface of the plunger, and when 0.1 kg/cm^2 (1.4 psi, 49 kPa) of air is applied to SST, bubbles appear on the upper surface of the plunger.

SST 09275-17010

(e) Slowly rotate the drive shaft in the pump rotation direction (clockwise) and read the dial indicator when the bubbles on the top of the plunger disappear.

Pre-stroke: 0.15 – 0.25 mm (0.0059 – 0.0098 in.)

If the pre-stroke is not as specified, replace the plunger adjusting shim under the plunger with a different sized shim.

Adjusting thim thickness mm (in.)		
1.90 (0.0748)	2.35 (0.0925)	2.80 (0.1102)
1.95 (0.0768)	2.40 (0.0945)	2.85 (0.1122)
2.00 (0.0787)	2.45 (0.0965)	2.90 (0.1142)
2.05 (0.0807)	2.50 (0.0984)	2.94 (0.1157)
2.10 (0.0827)	2.55 (0.1004)	2.99 (0.1177)
2.15 (0.0846)	2.60 (0.1024)	3.04 (0.1197)
2.20 (0.0866)	2.65 (0.1043)	3.09 (0.1216)
2.25 (0.0886)	2.70 (0.1063)	3.14 (0.1236)
2.30 (0.0906)	2.75 (0.1083)	3.19 (0.1256)

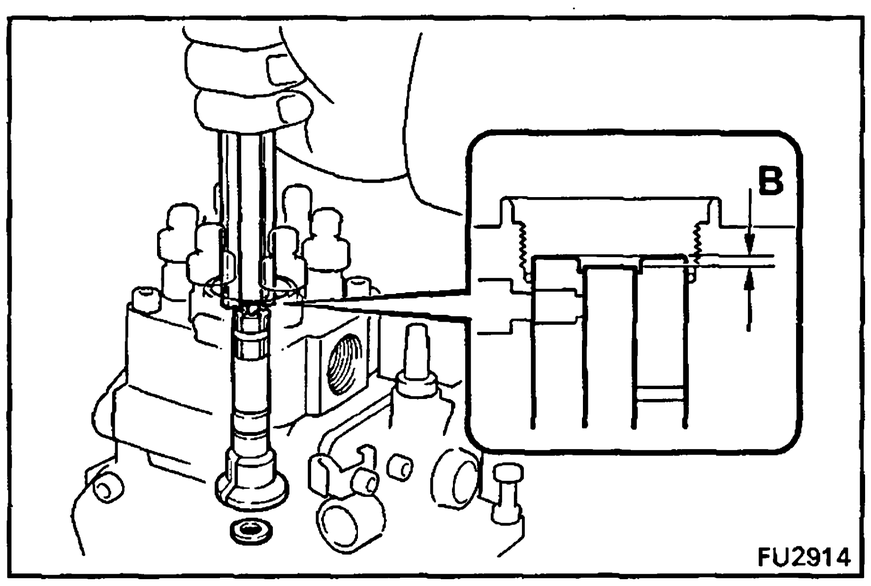

HINT: If the shim is made thicker, the pre-stroke is decreased

(f) After completing the pre-stroke adjustment, check that dimension B is within specifications.

Dimension B: 2.8 – 3.2 mm (0.110 – 0.126 in.)

If dimension B is not within the specification, replace the distributor head.

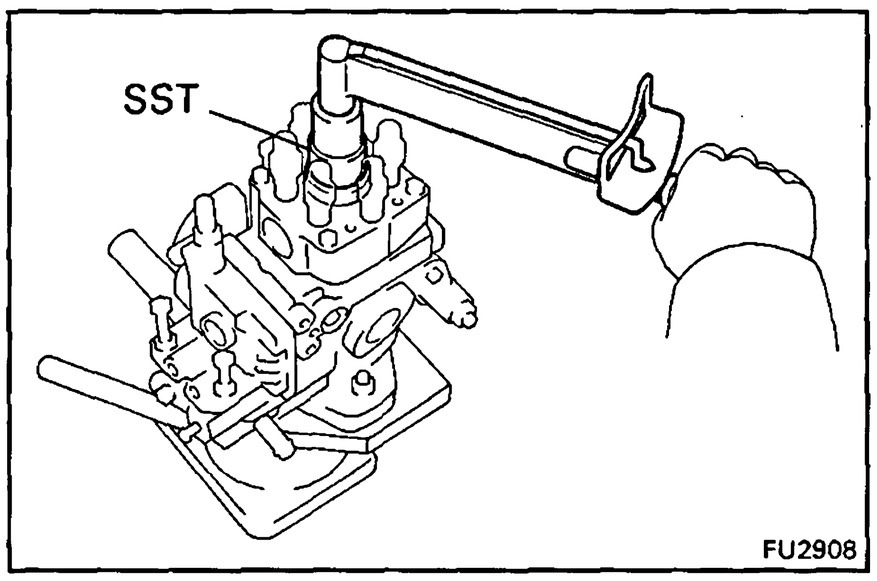

29. (1HZ and 1HD-T)
INSTALL DISTRIBUTIVE HEAD PLUG

(a) Install a new O-ring to the head plug.

(b) Using SST, install the head plug.

SST 09260-54012 (09262-54010)

Torque: 1HZ 700 kg-cm (51 ft-lb, 69 N·m)
1HD-T 900 kg-cm (65 ft-lb, 88 N·m)

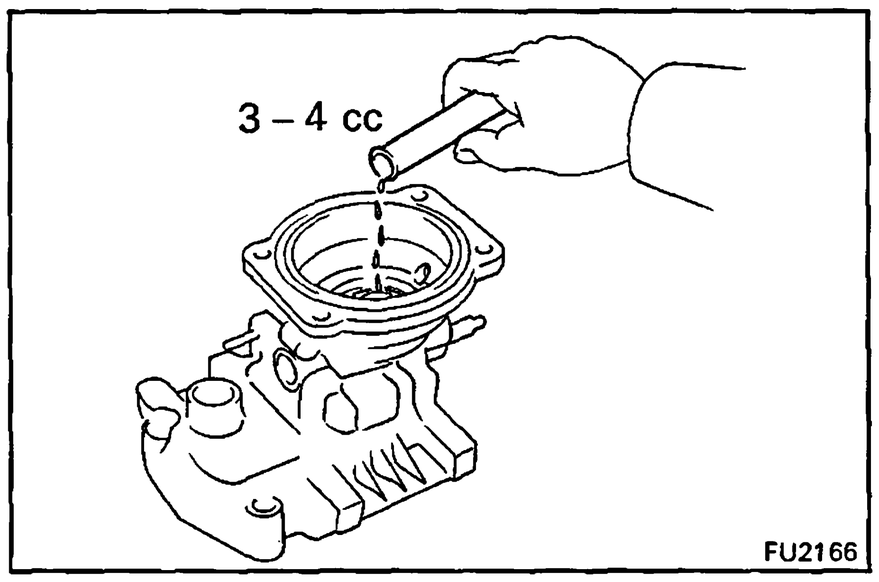

30. (1PZ (w/ HAC) and 1HZ (w/ HAC))
ASSEMBLE HIGH ALTITUDE COMPENSATOR

A. Install pneumatic bellows

(a) Insert 3 – 4 cc (0.18 – 0.24 cu in.) of engine oil into the bushing hole.

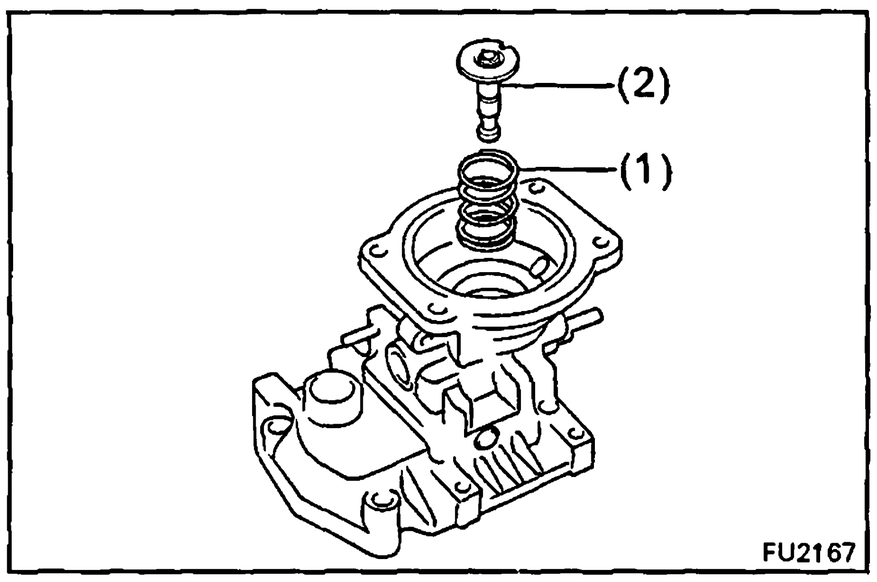

(b) Place the following parts on the governor cover:

(1) Pneumatic bellows spring

(2) Push rod

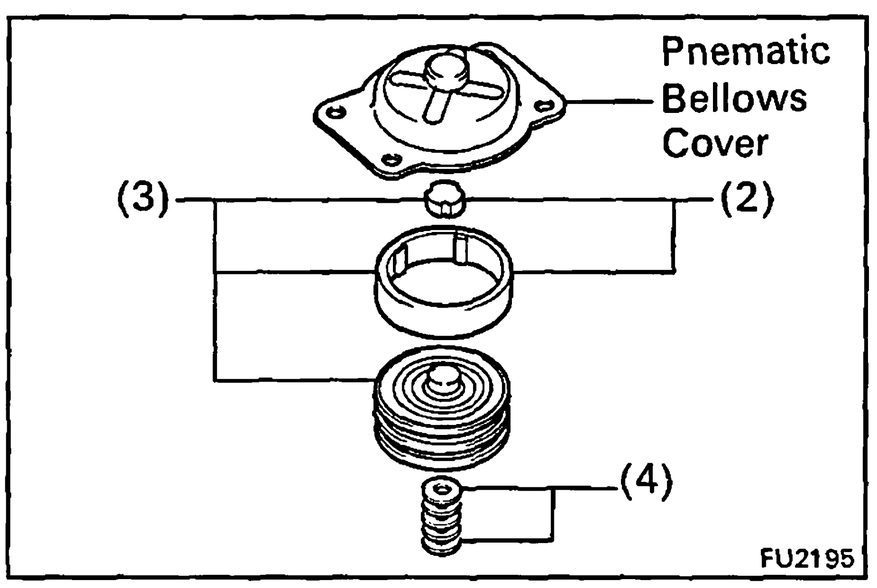

(c) Install the following parts to the pneumatic bellows cover:

(1) Pneumatic bellows

(2) Two rubber caps

(3) Pneumatic bellows and two rubber caps assembly

(4) Shims

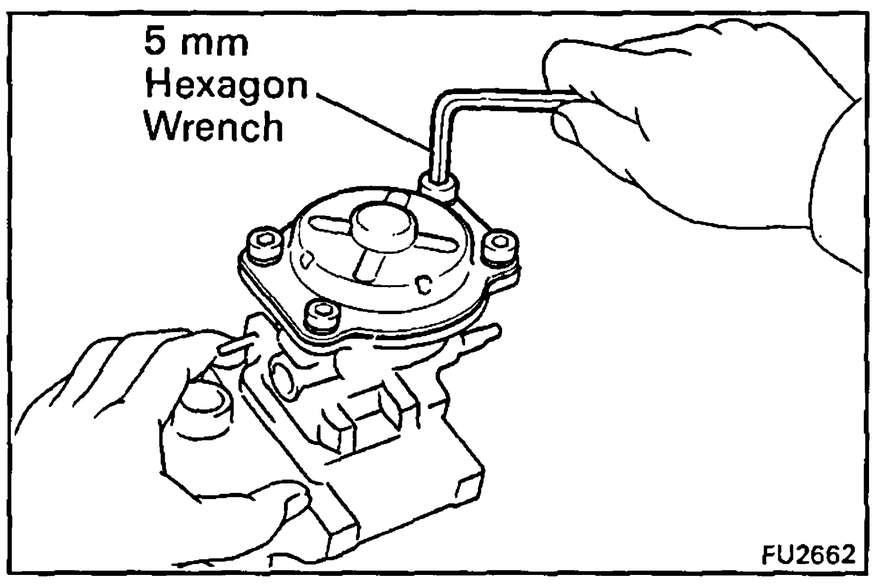

(d) Install a new gasket and the pneumatic bellows and bellows cover assembly to the governor cover.

(e) Using a 5 mm hexagom wrench, install the four bolts.

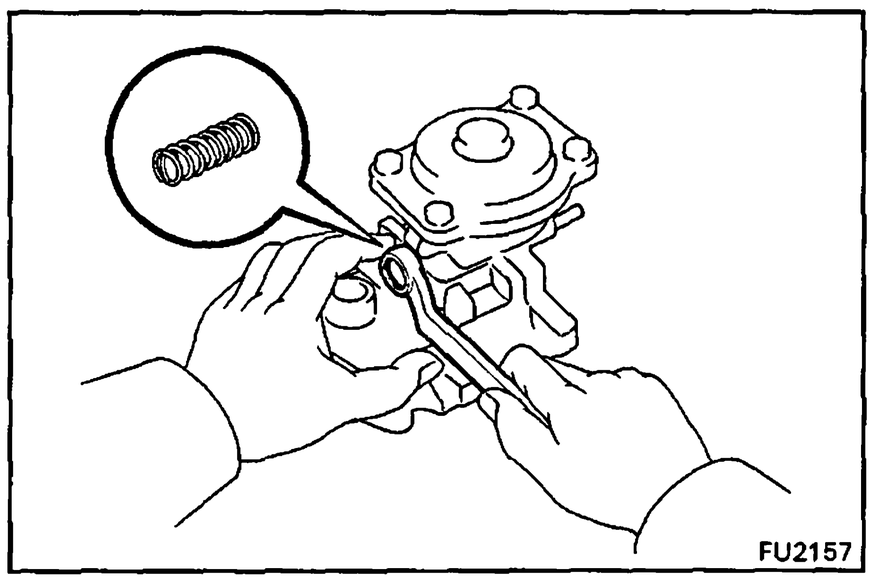

B. Install lever control spring

Install the lever control spring with a new gasket and the bolt.

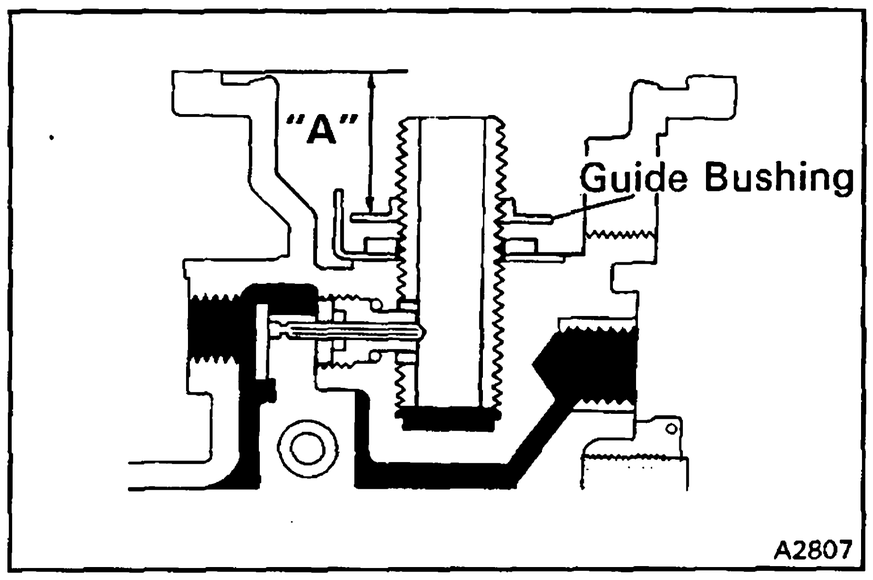

31. (1HD-T)
ASSEMBLE BOOST COMPENSATOR

A. Install guide bushing

Install and adjust the guide bushing to the dimension "A" as shown in the illustration.

Dimension "A":
Europe 19.2 – 19.3 mm (0.755 – 0.760 in.)
Others 18.6 – 18.7 mm (0.732 – 0.736 in.)

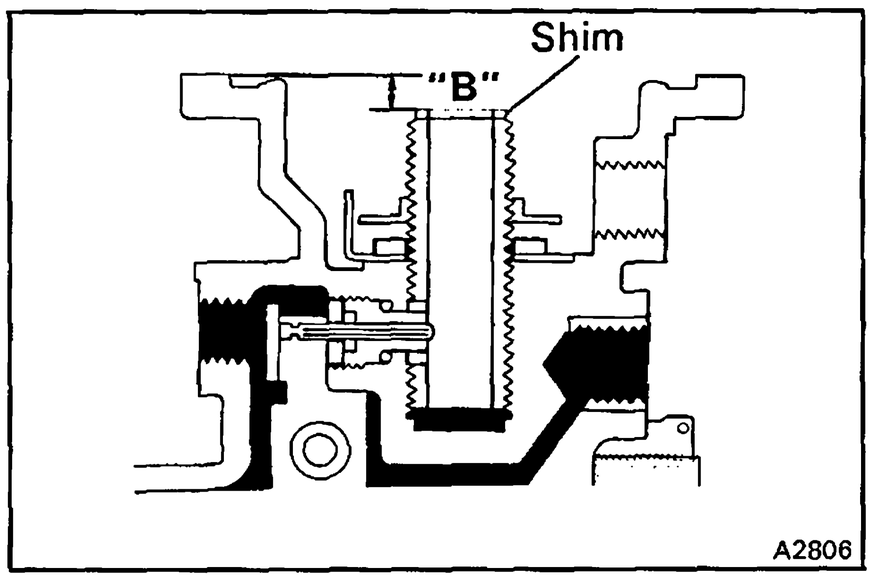

B. Install boost compensator diaphragm

(a) Adjust boost compensator shim

(1) Place the shim on the guide bushing

(2) Using vernier calipers, measure the dimension "B" as shown in the illustration.

Dimension "B":
Europe 4.8 – 5.0 mm (0.189 – 0.197 in.)
Others 6.0 – 6.2 mm (0.236 – 0.244 in.)

If the dimension is not within specification, select and install the correct shim.

Adjusting shim thickness:
1.1 mm (0.043 in.)
1.3 mm (0.051 in.)
1.5 mm (0.059 in.)
1.7 mm (0.067 in.)
1.9 mm (0.075 in.)
2.1 mm (0.083 in.)
2.3 mm (0.090 in.)
2.5 mm (0.098 in.)
2.7 mm (0.106 in.)
2.9 mm (0.114 in.)
3.1 mm (0.122 in.)
3.3 mm (0.130 in.)

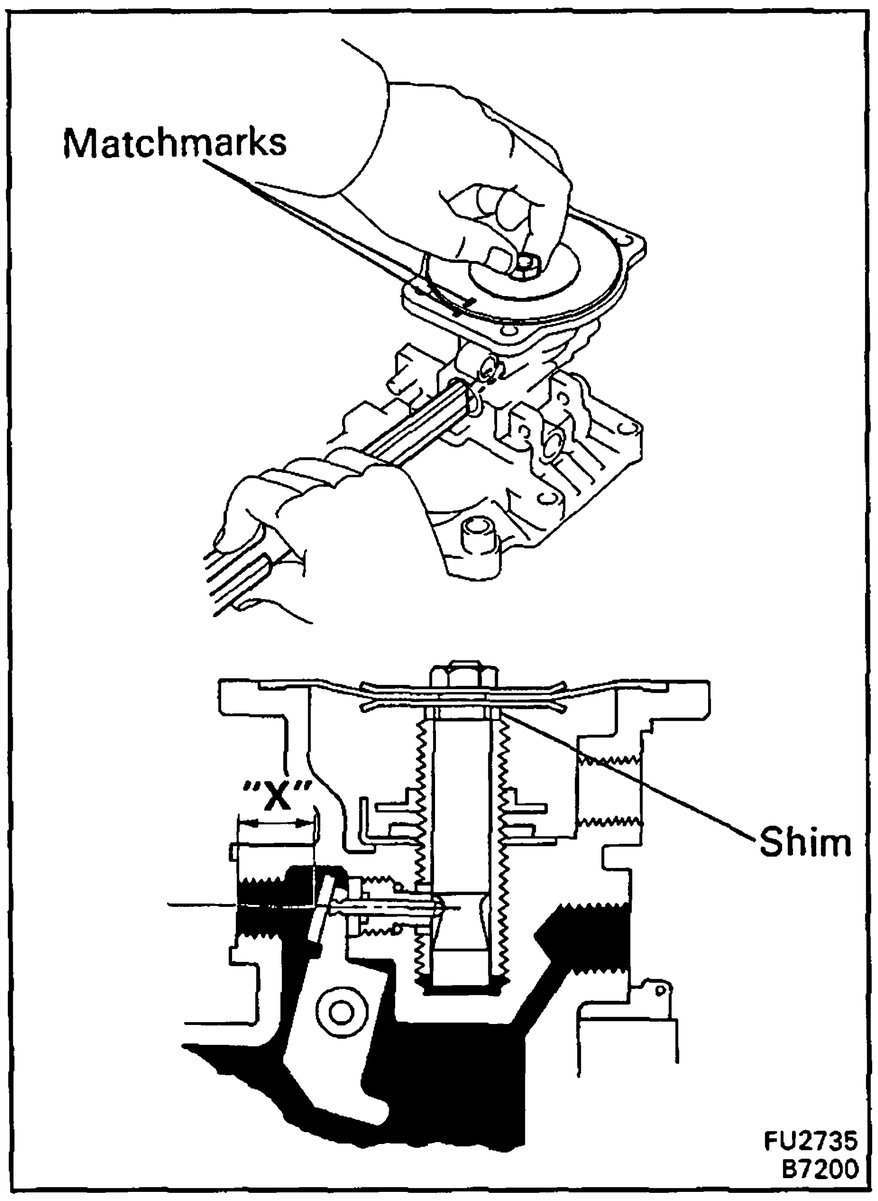

(b) Adjust the installation direction of boost compensator diaphragm.

(1) Install the shim and diaphragm.

HINT: Do not assemble the spring.

(2) While pushing on the diaphragm, measure dimension "X" with vernier calipers as shown.

Dimension "X": 6.9 – 7.1 mm (0.272 – 0.280 in.)

HINT: Measure at the center of the hole.

(3) Place matchmarks on the diaphragm and governor cover.

(4) Remove the diaphragm.

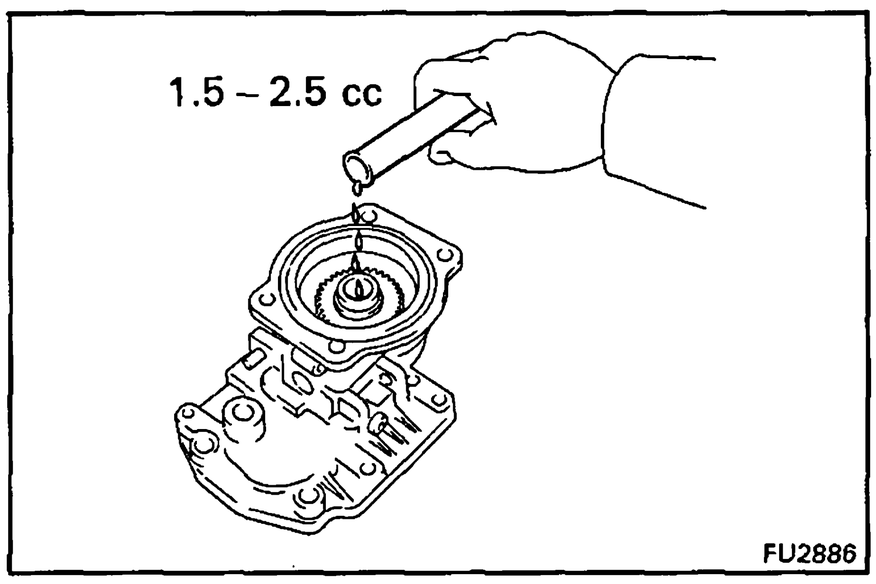

(c) Insert 1.5 – 2.5 cc (0.09 – 0.15 cu in.) of engine oil into the bushing hole.

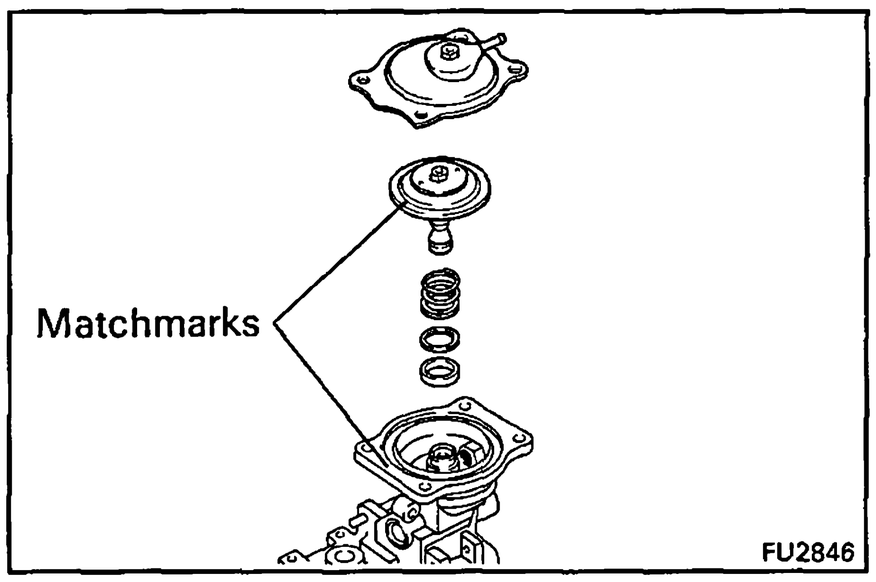

(d) Install spring, shim and diaphragm.

(e) Align the matchmarks on the diaphragm and governor cover.

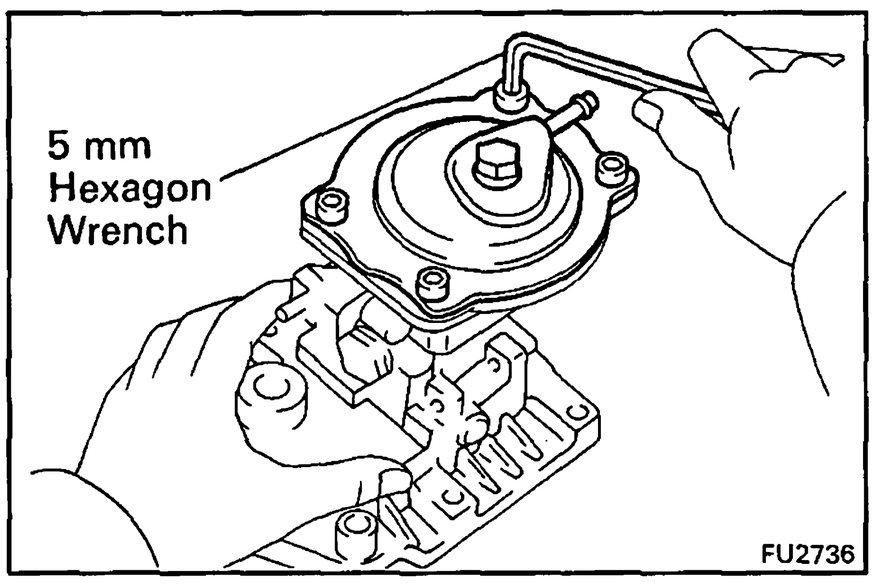

(f) Using a 5 mm hexagon wrench, install the four bolts.

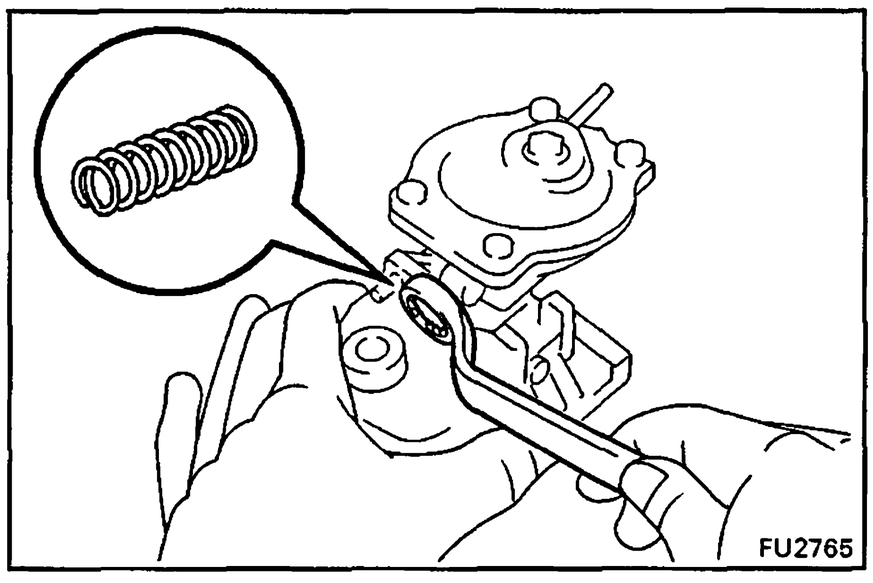

C. Install lever control spring

Install the lever control spring with a new gasket and the bolt.

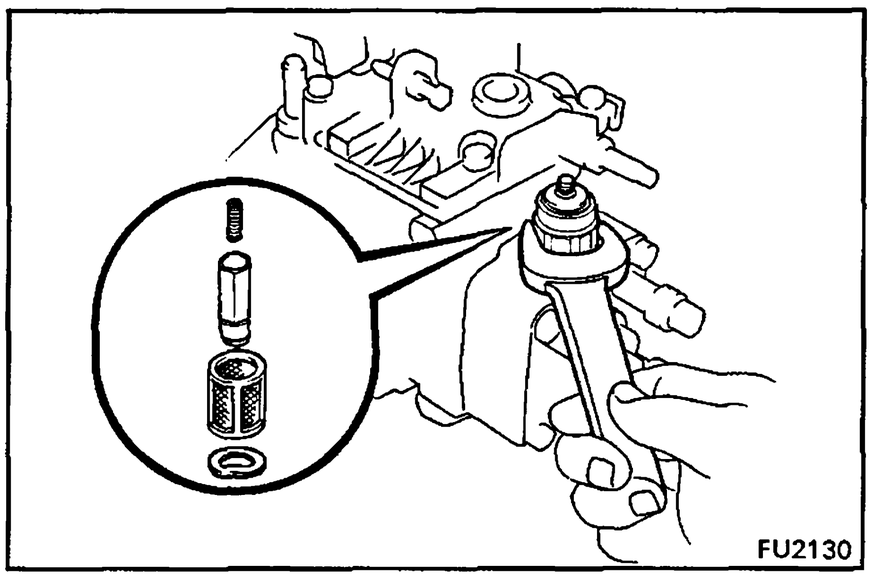

32. INSTALL FUEL CUT SOLENOID

(a) Install a new O-ring on the fuel cut solenoid.

(b) Install the strainer, valve, spring, a new gasket and the fuel cut solenoid.

Torque: 225 kg-cm (16 ft-lb, 22 N·m)

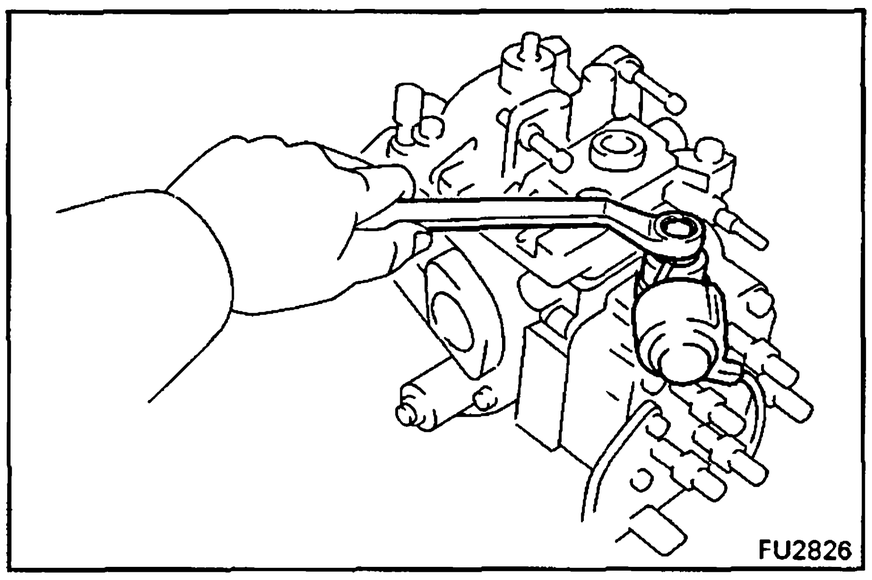

(c) Install the lead wire to the fuel cut solenoid with the nut.

(d) Install the dust cover to the fuel cut solenoid.

(e) Install the lead wire connector to bracket.

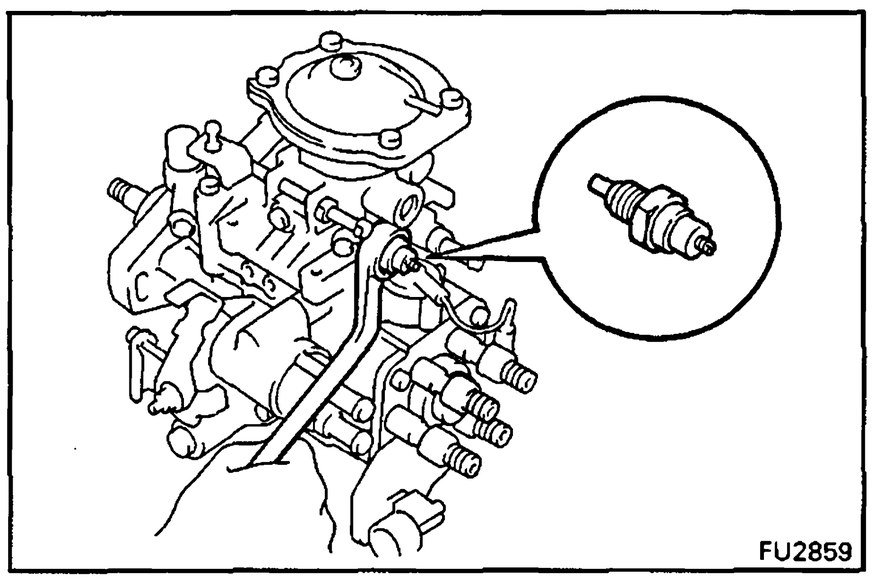

33. (w/ Dash Pot)
INSTALL DASH POT

Install the dash pot and gasket.

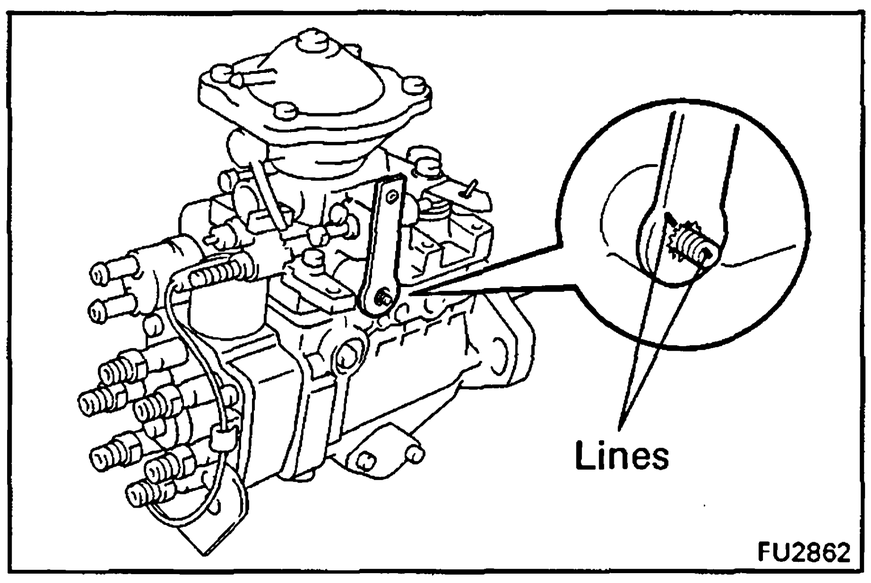

34. (w/ PCS)
INSTALL NO.1 PCS LEVER

(a) Align the lines of the levers.

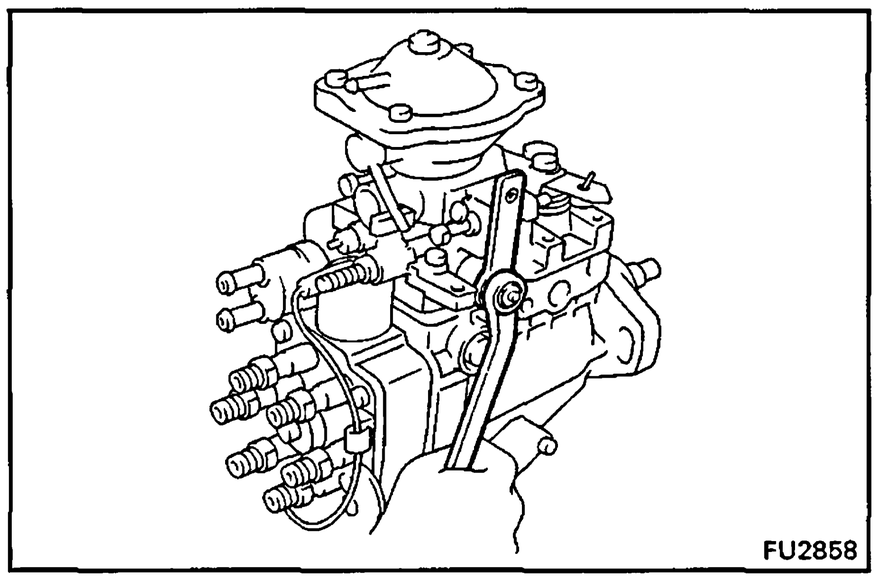

(b) Install the nut.

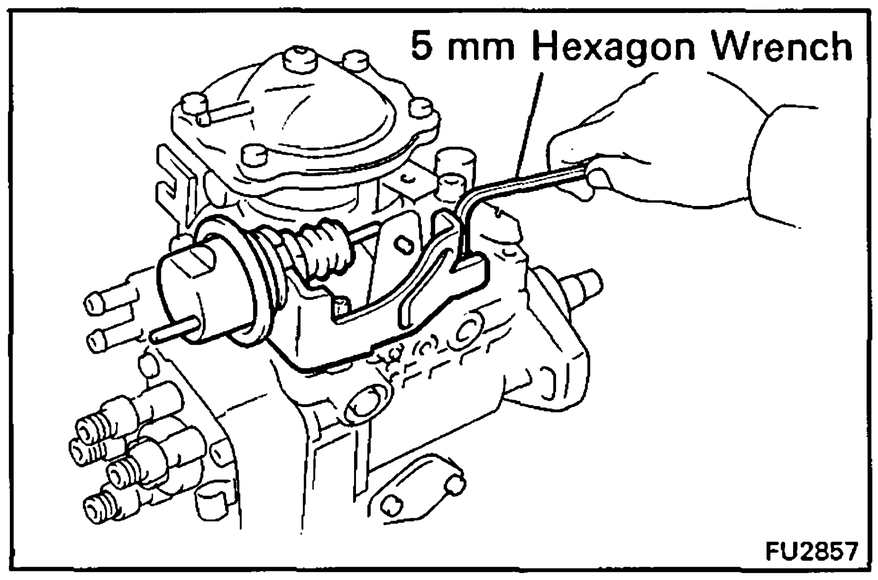

35. (w/ PCS)
INSTALL PCS ACTUATOR

(a) Using a 5 mm hexagon wrench, install the PCS actuator assembly with the two bolts.

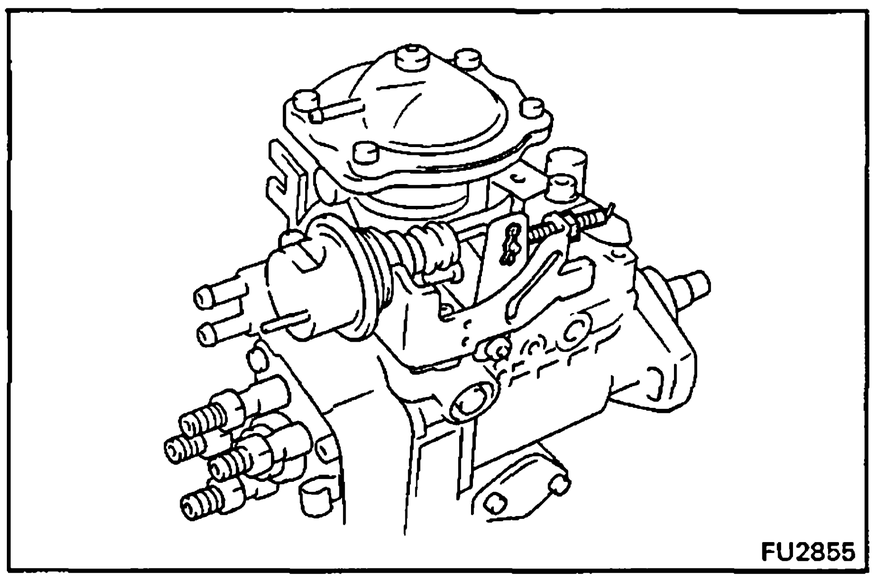

(b) Install the clip.

(c) Install the PCS adjusting screw.

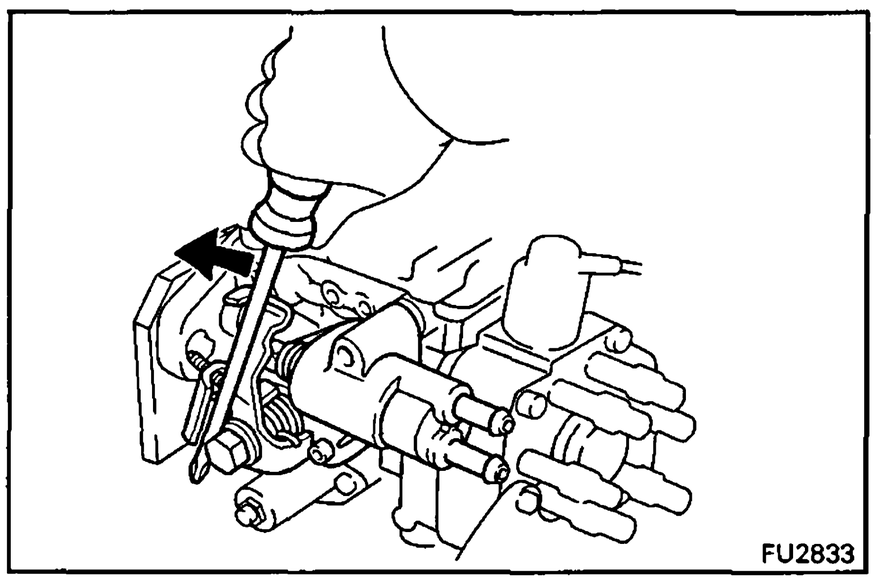

36. (w/ ACSD)
INSTALL THERMO WAX

(a) Using a screwdriver, turn the cold starting lever counterclockwise approx. 20°.

(b) Put a metal plate (thickness of 3.5 – 7.5 mm (0.138 – 0.295 in.)) between the cold starting lever and thermo wax plunger.

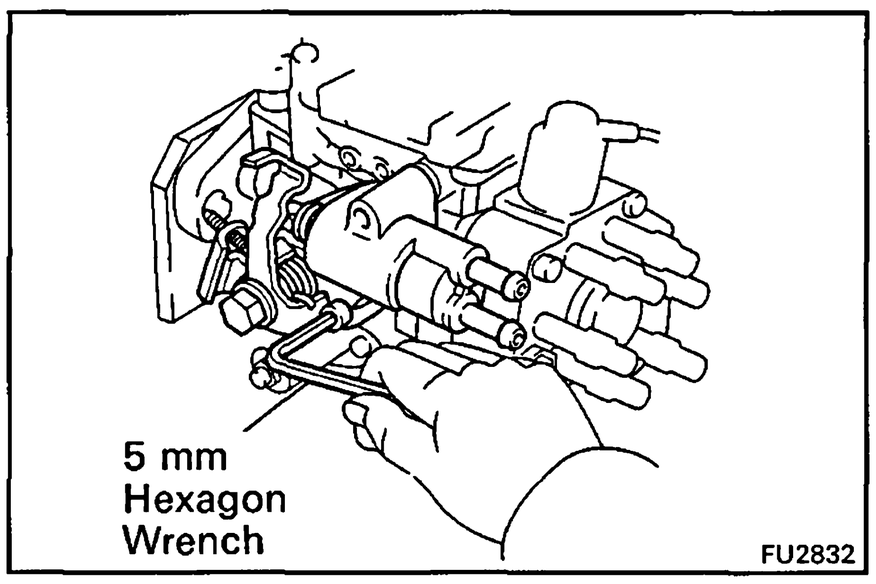

(c) Install a new O-ring and the thermo wax with the two bolts.

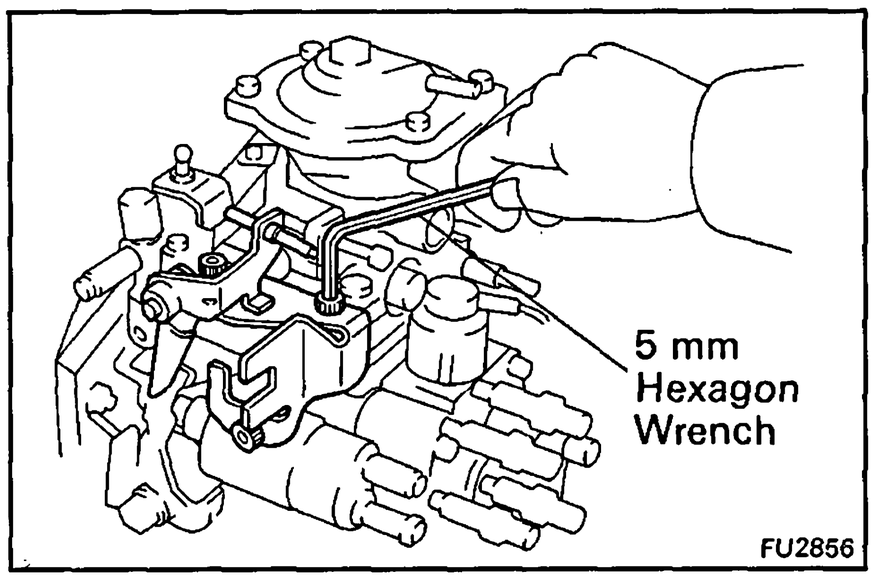

37. **(w/ ACSD)**
INSTALL IDLE-UP LEVER

Using a 5 mm hexagon wrench, install the idle-up lever with the three bolts.

38. **(w/ A/C)**
INSTALL IDLE-UP ACTUATOR

39. **REMOVE INJECTION PUMP FROM SST (STAND)**

SST 09241-76022 and 09245-54010

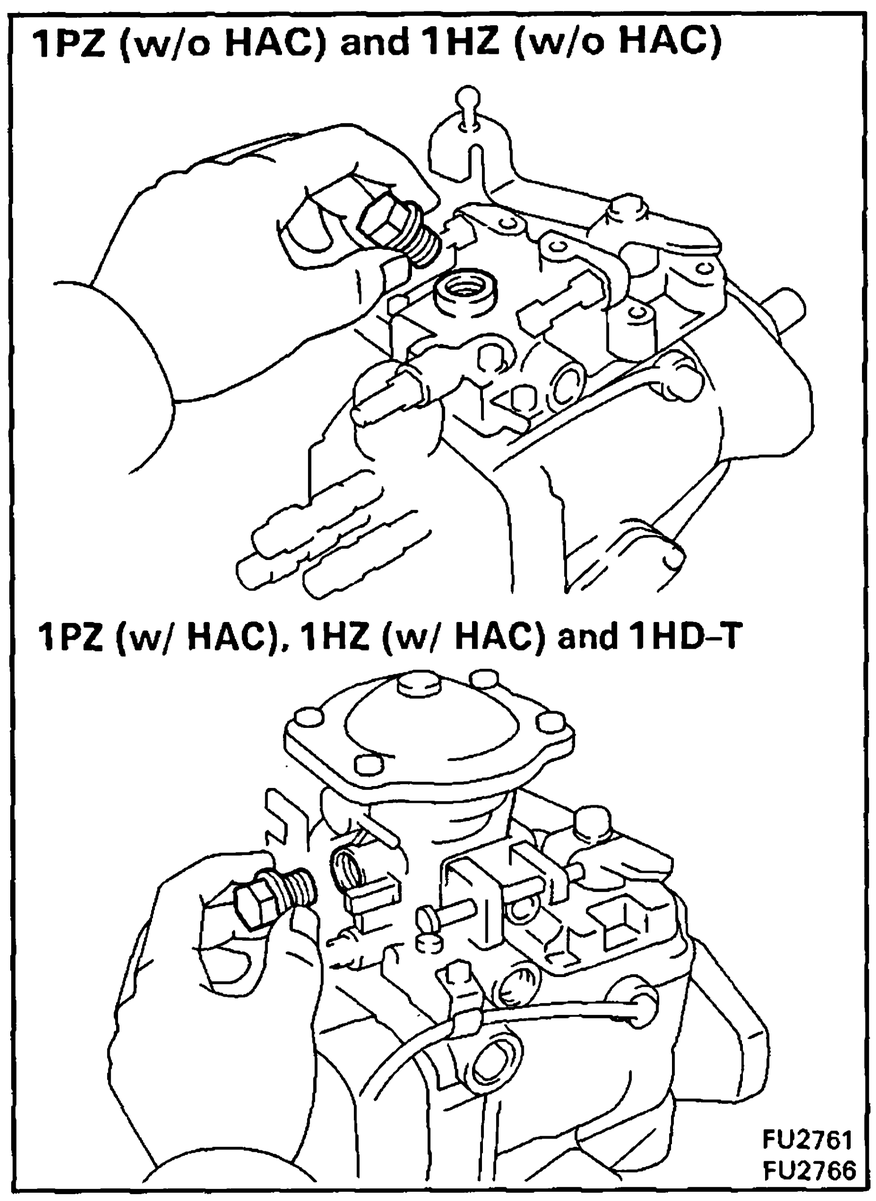

40. **PERFORM AIR TIGHT TEST**

(a) Install a bolt to the overflow port.

(b) Connect an air hose to the fuel inlet pipe and place the injection pump into diesel fuel.

(c) Apply 0.5 kg/cm^2 (7 psi, 49 kPa) of pressure and confirm that there are no leaks.

(d) Next check that there are no leaks with 5.0 kg/cm^2 (71 psi, 490 kPa) of pressure applied.

41. **INSTALL SET KEY OF INJECTION PUMP DRIVE PULLEY ON DRIVE SHAFT**

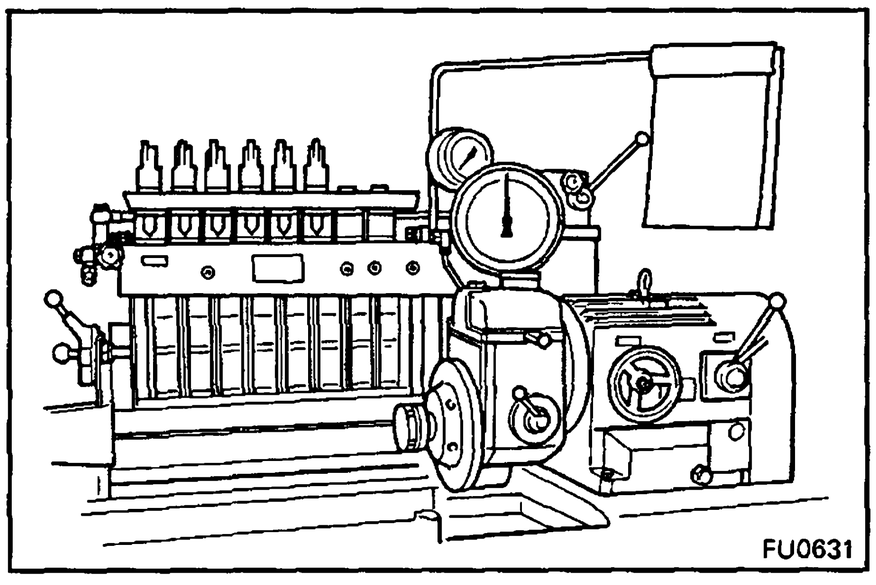

ADJUSTMENT OF INJECTION PUMP

1. PRE-TEST CHECK AND PREPARATION

(a) The specifications for test nozzle and nozzle holders are as follows.

Test nozzle: DN12SD12 (NIPPONDENSO)

Test nozzle opening pressure:
145 – 155 kg/cm^2
(2,062 – 2,205 psi, 14,220 – 15,200 kPa)

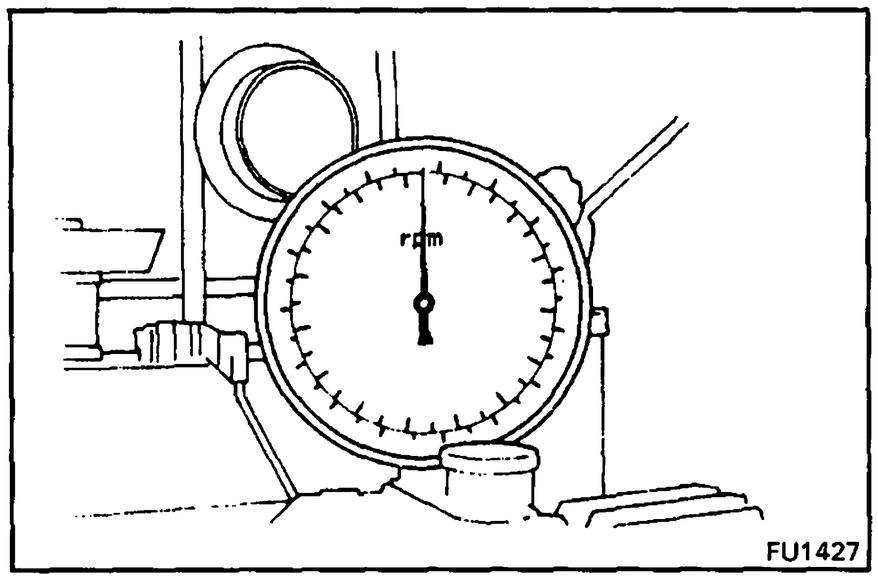

(b) Check the accuracy of the tachometer.

Allowable error: ± 40 rpm

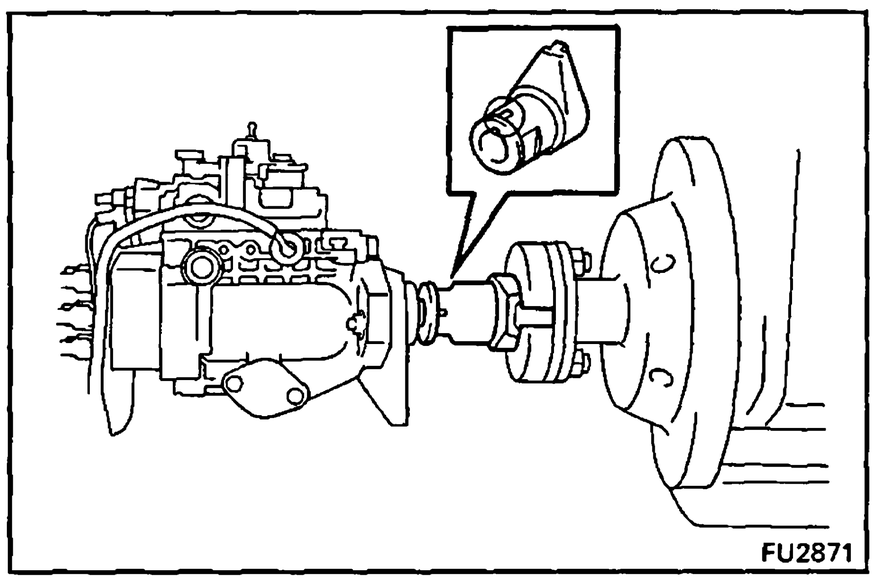

(c) Install the angle gauge stand.

(d) Mount the injection pump body on the pump tester.

HINT: Place a mark on the key groove portion of the coupling.

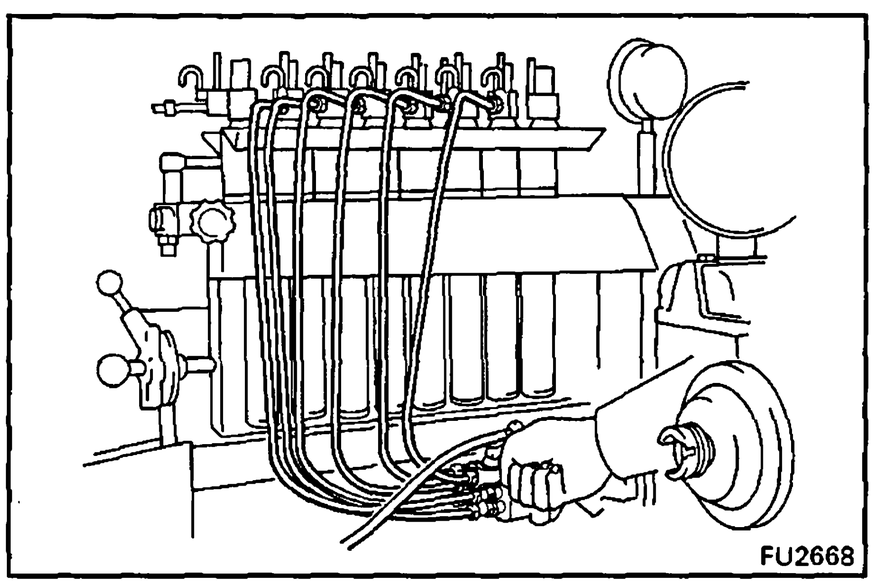

(e) Install an injection pipe with the following specifications.

Outer diameter:	**6.0 mm (0.236 in.)**
Inner diameter:	**2.0 mm (0.079 in.)**
Length:	**840 mm (33.07 in.)**
Minimum bending radius:	**25 mm (0.98 in.) or more**

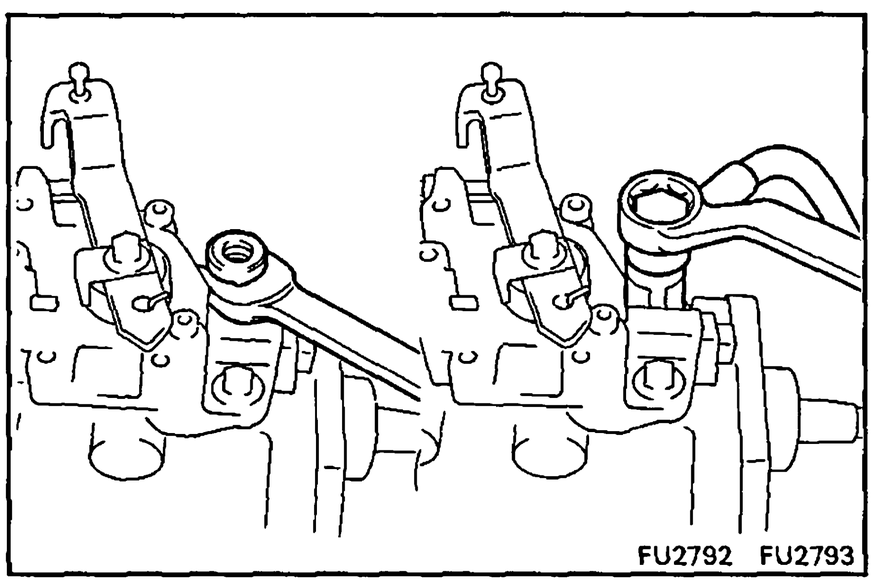

(f) Remove the fuel inlet hollow screw.

(g) Connect the fuel inlet pipe with an adapter.

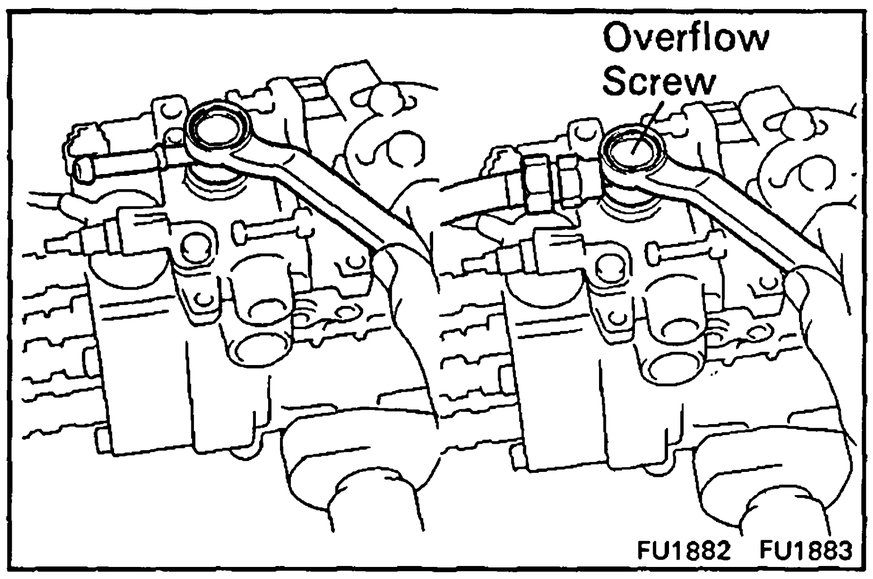

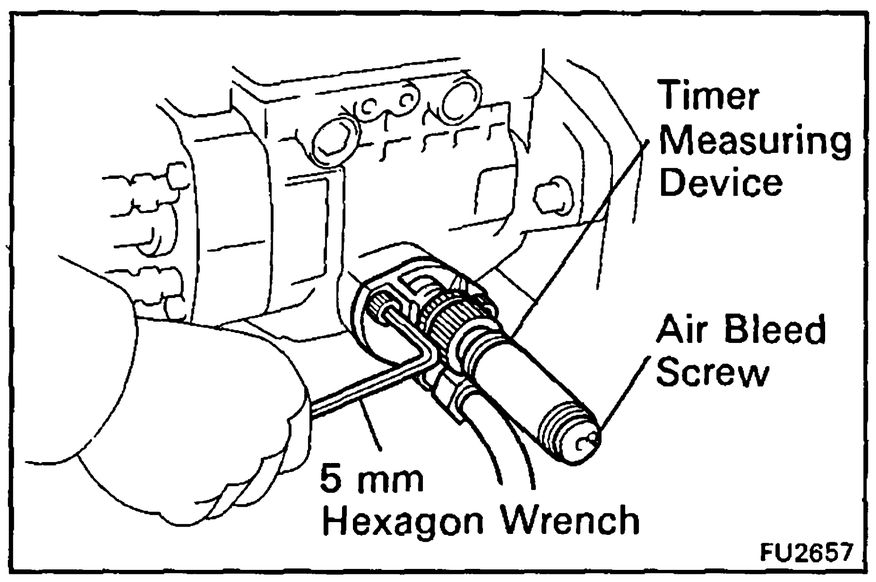

(h) Install the overflow hose with the overflow screw.

HINT: Always use the overflow screw installed on the pump to be adjusted.

(i) Using a 5 mm hexagon wrench, remove the two bolts and RH timer cover.

(j) Install the inner pressure gauge with the timer measuring device.

Part No. 95095-10220 and 95095-10231

(NIPPONDENSO)

HINT: Bleed the air by the air bleed screw.

(k) (1HD-T)
Connect SST (turbocharger pressure gauge) to the boost compensator.

SST 09992-00241

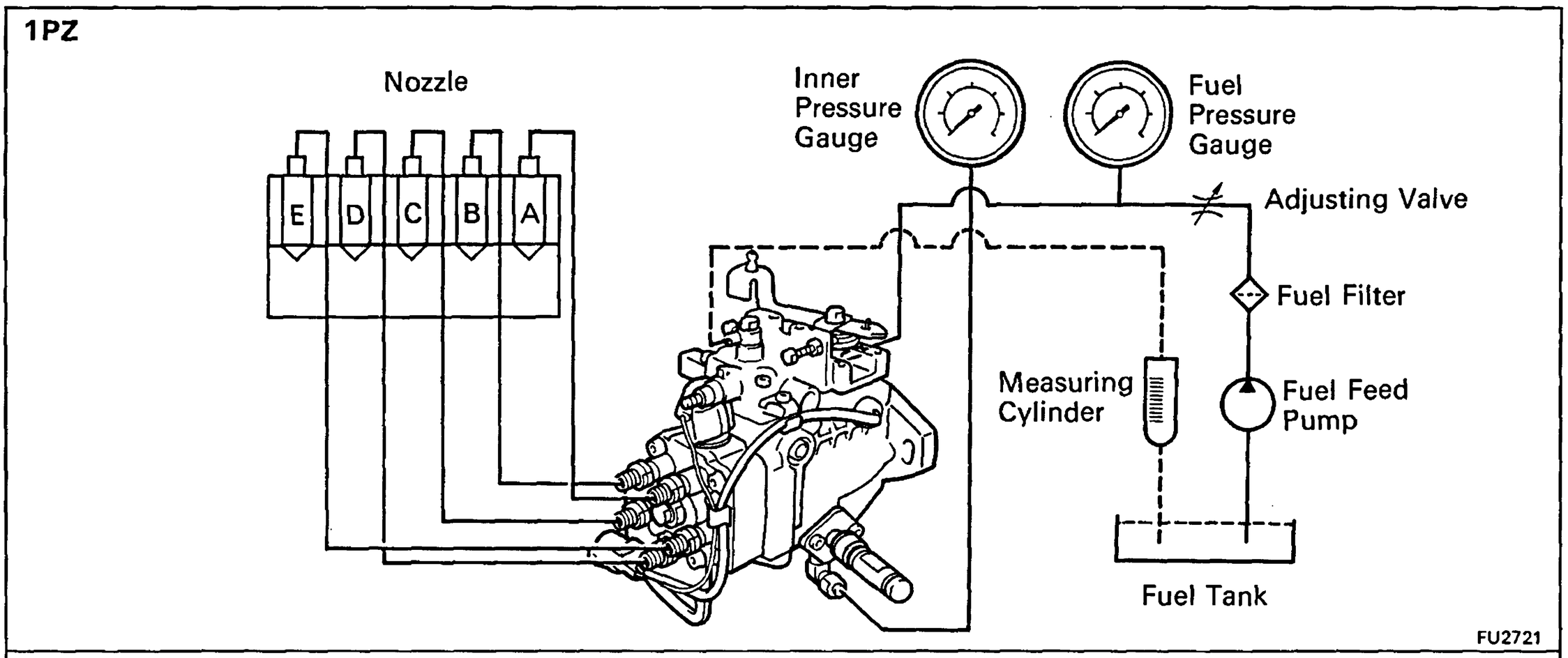

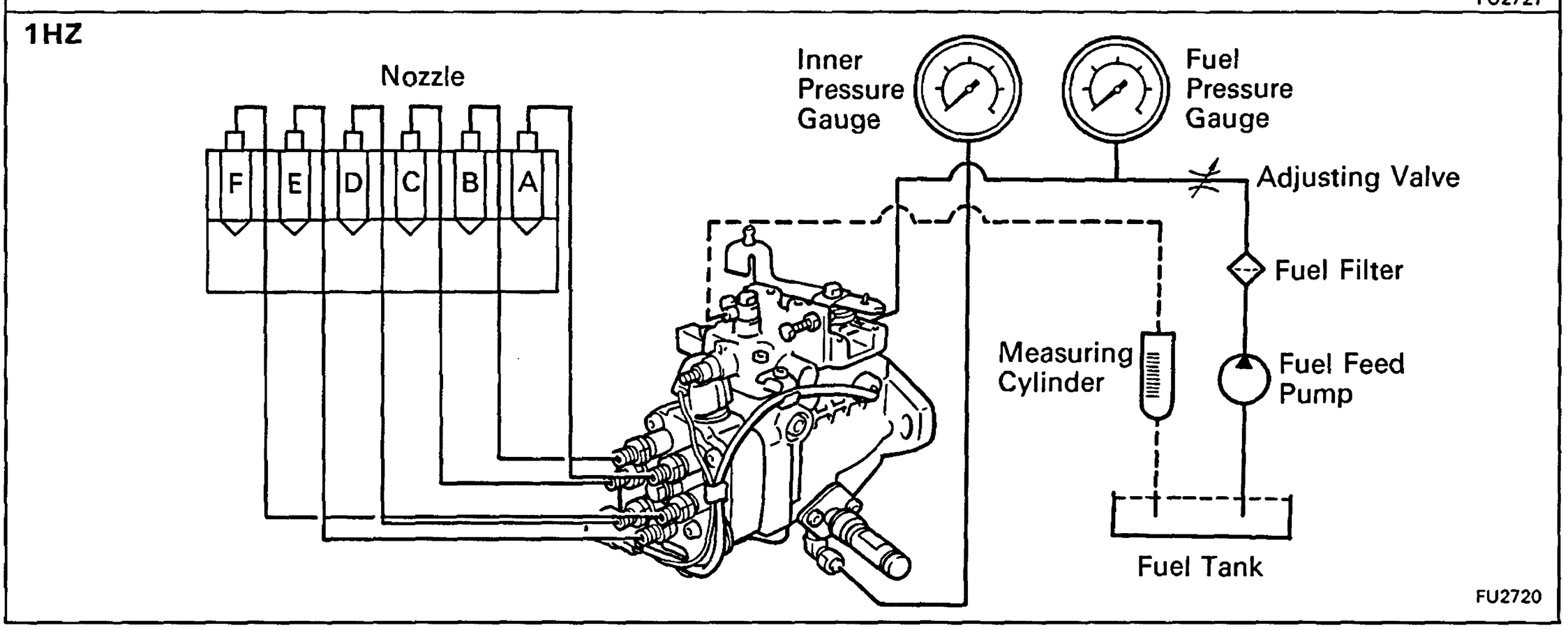

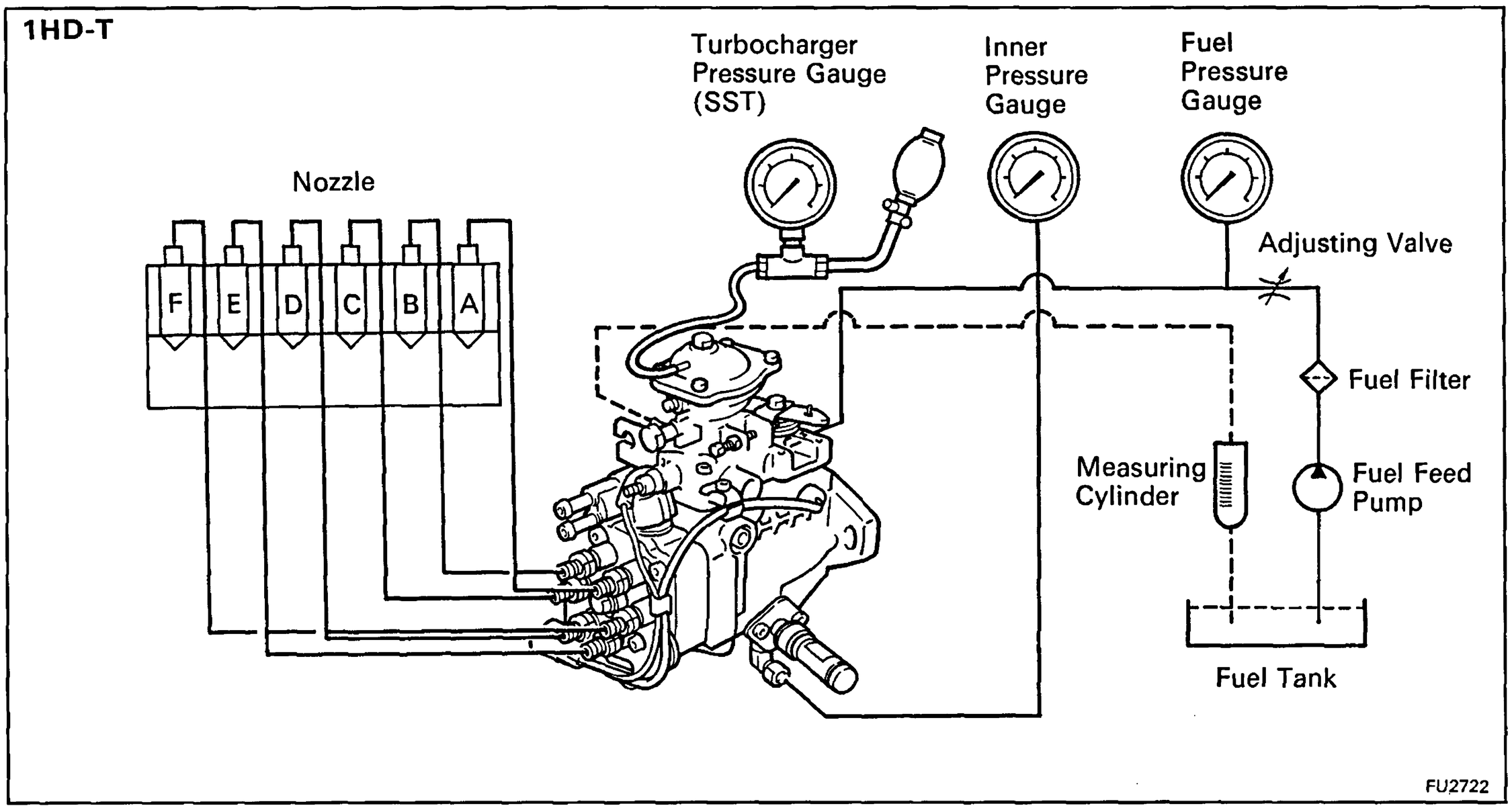

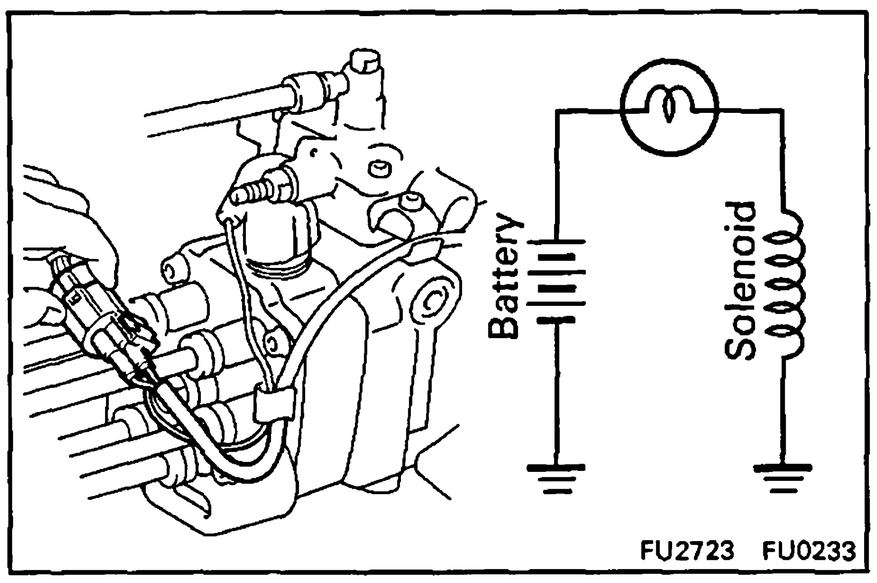

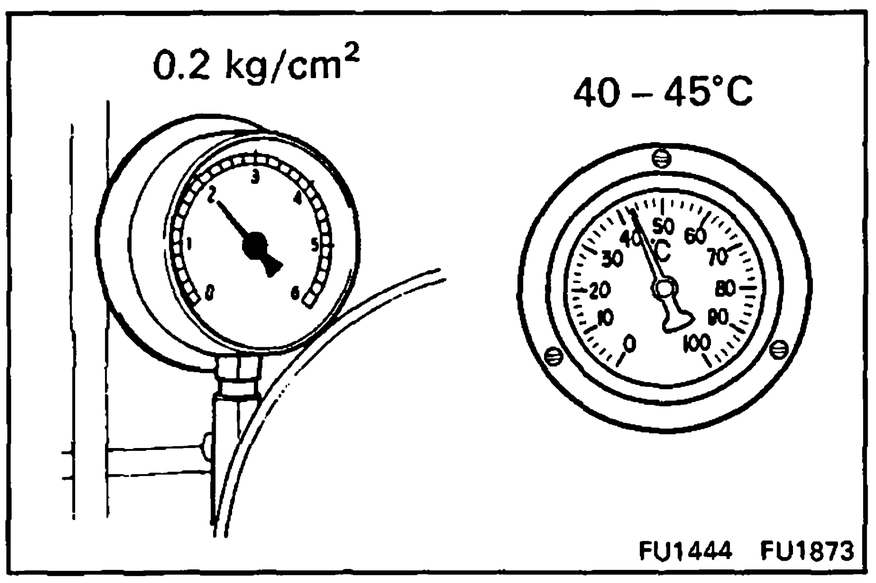

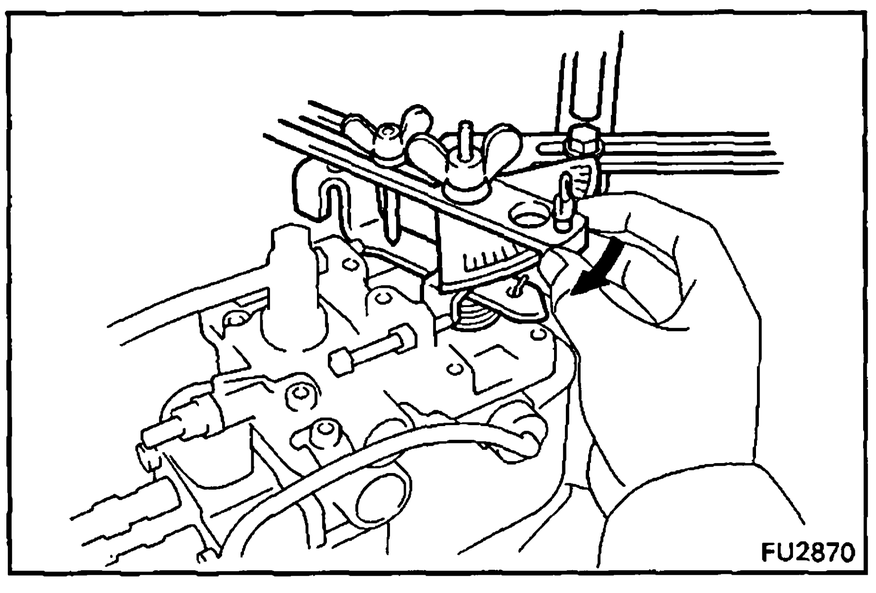

(l) (12 V type)
Apply approx. 6 volts of DC power to the fuel cut solenoid.

(m) (24 V type)
Apply approx. 12 volts of DC power to the fuel cut solenoid.

NOTICE:

- **When applying voltage to the solenoid, position the battery as far away from the solenoid as possible so that a spark does not occur.**
- **When connecting the battery cable, connect the solenoid side first.**

(n) The pressure for feeding fuel to the injection pump should be 0.2 kg/cm^2 (2.8 psi, 20 kPa). The fuel temperature for pump testing should be 40 – 45°C (104 – 113°F).

(o) Install an angle gauge to the stand and set it to the adjusting lever.

(p) Secure the adjusting lever fully on the maximum speed side.

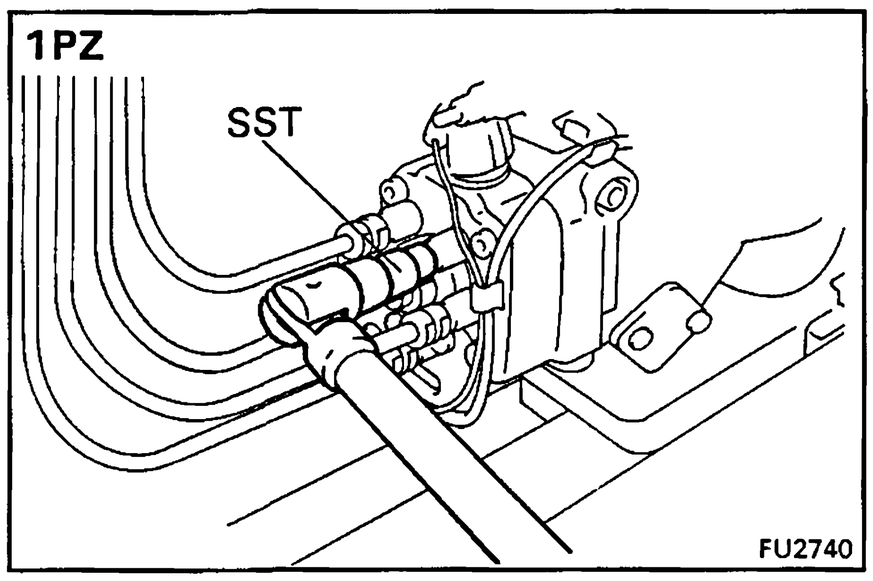

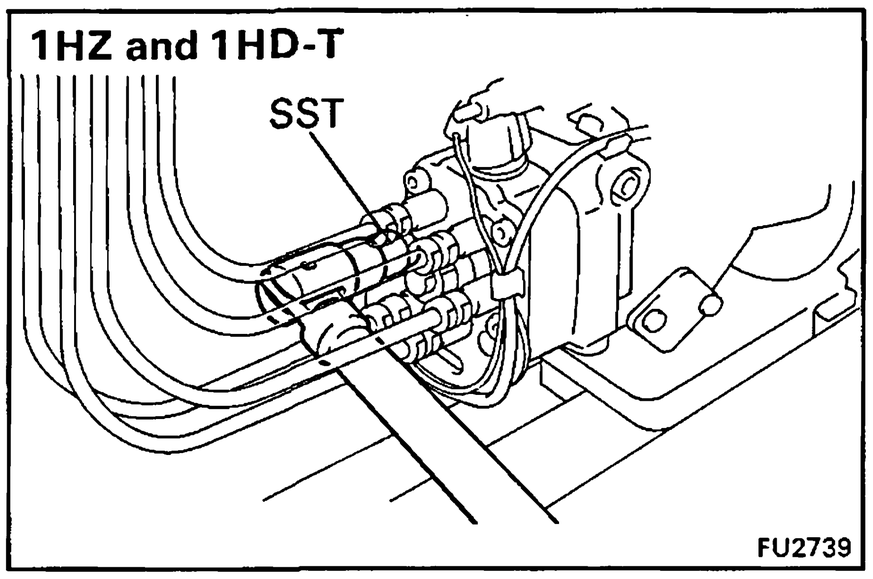

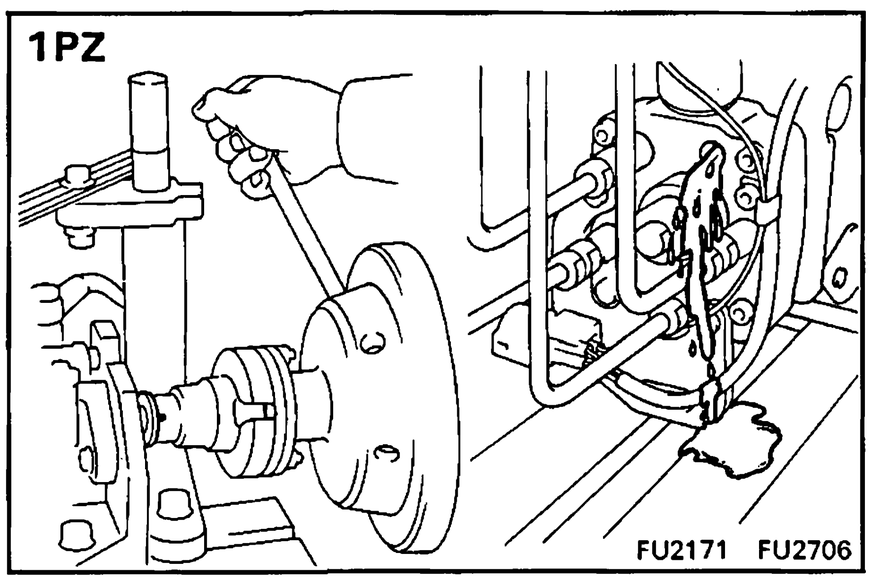

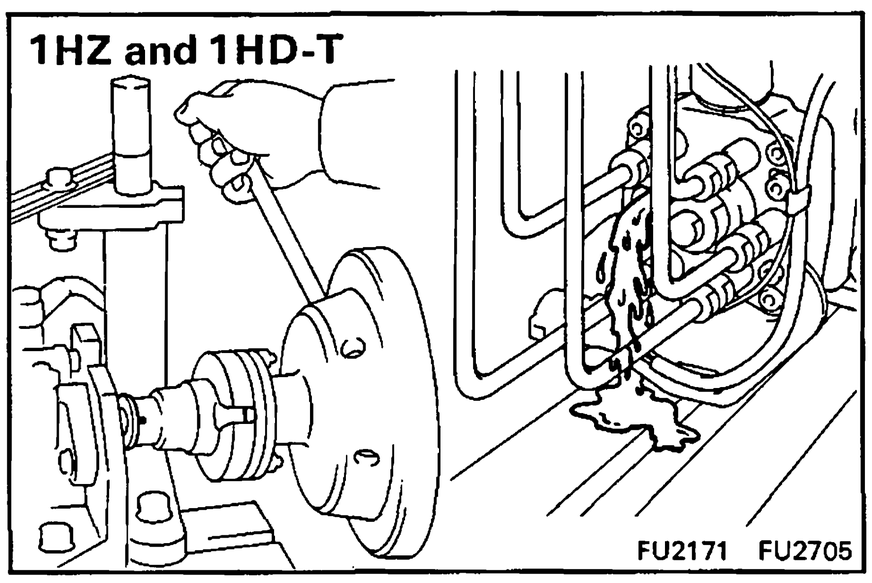

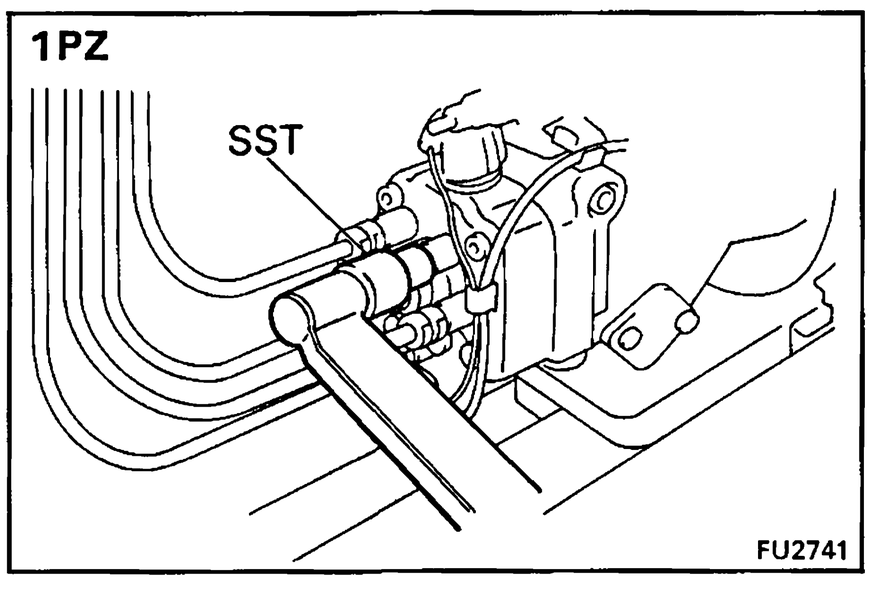

(q) Check the installation direction of the camplate as follow:

- (1PZ)
  Disconnect the injection pipe from the position marked "A" on the distributive head.
- (1HZ and 1HD-T)
  Disconnect the injection pipe from the position marked "C" on the distributive head.
- Using SST, remove the delivery valve holder.

SST 09260-54012 (09269-54020)

- Check that fuel is flowing out when the mark is in the position shown in the illustration.

  If not, it is improperly assembled.
- Disassemble and change the camplate position 180° in the opposite direction.

HINT: At this time, disconnect the fuel cut solenoid wire harness.

- Using SST, install the delivery valve holder.

SST 09260-54012 (09269-54020)

- Connect the injection pipe.

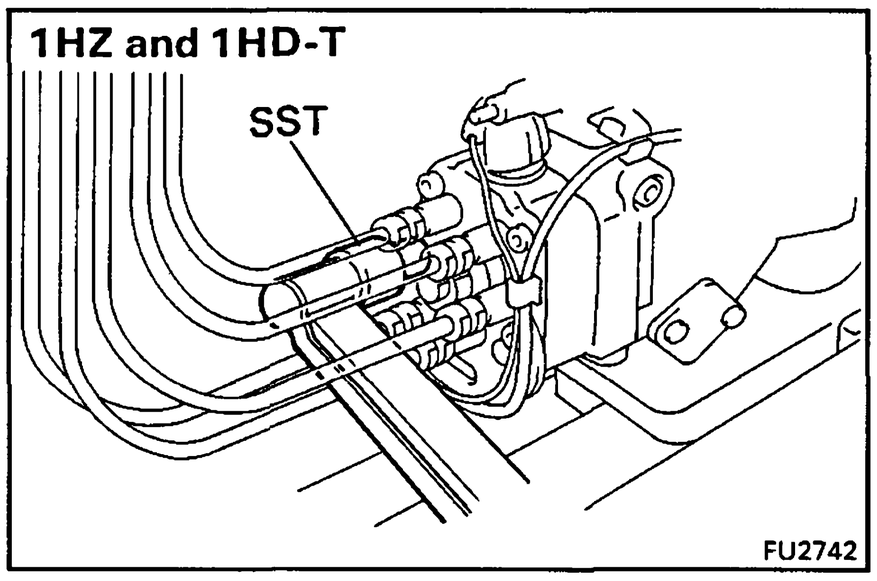

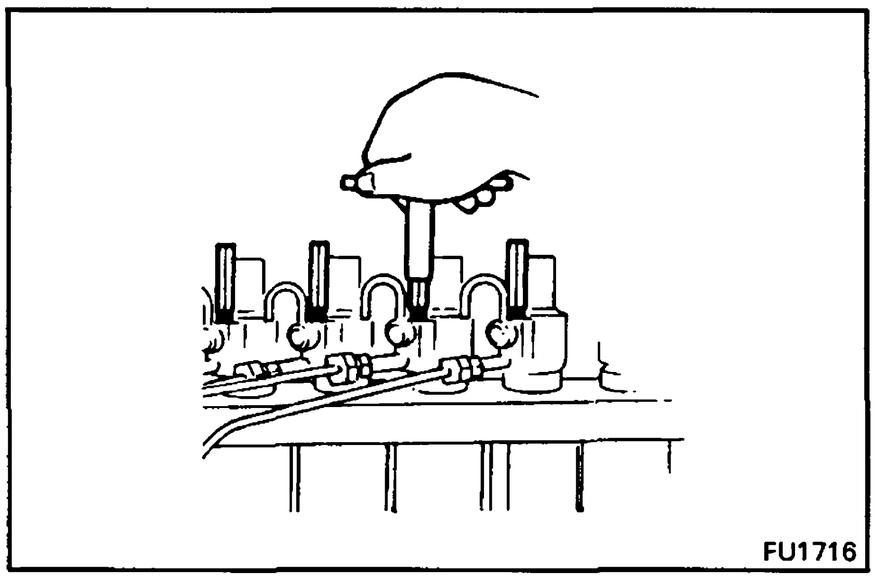

(r) Bleed the air from the injection pipes.

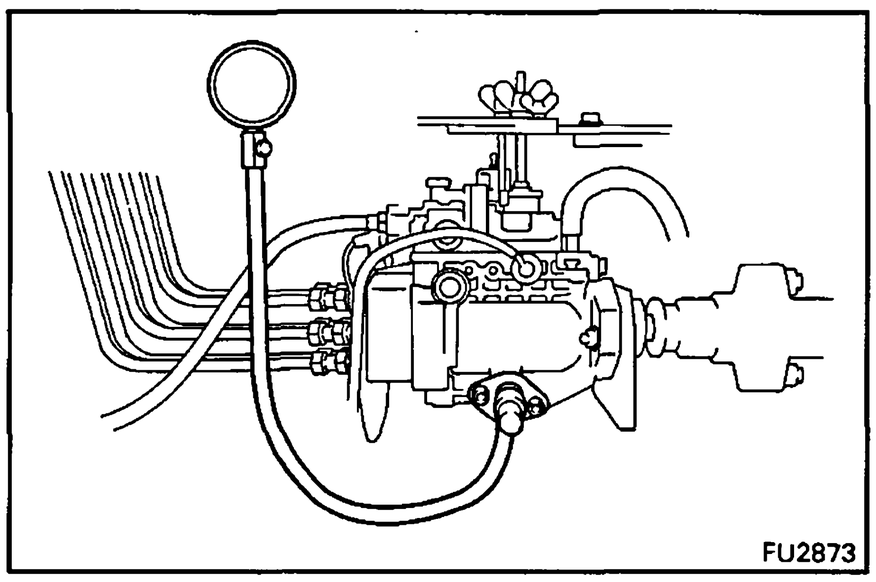

(s) Race the injection pump for 5 minutes at 2,000 rpm.

NOTICE: Check that there is no fuel leakage or abnormal noise.

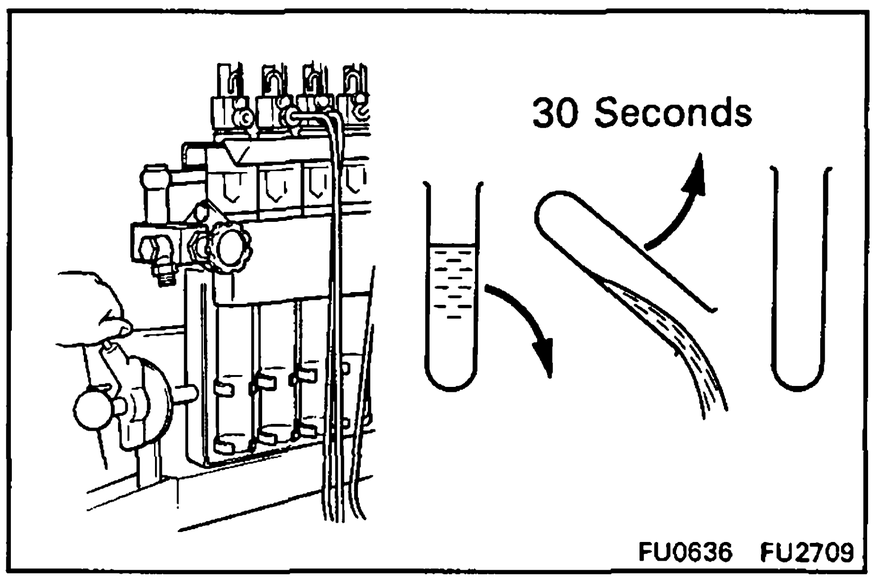

HINT:

- Measure the volume of each injection cylinder with a measuring cylinder.
- Before measuring the injection volume first hold the cylinder tilted for at least 30 seconds to discard all the fuel.

2. PRE-SET FULL LOAD INJECTION VOLUME

(a) Set the adjusting lever to maximum position.

(b) (1PZ (w/ HAC) and 1HZ (w/ HAC))
Apply 760 ± 1.5 mmHg (29.92 ± 0.06 in.Hg, 101.3 ± 0.2 kPa) absolute pressure.

(c) (1HD-T (w/o BACS))
Apply 0.81 kg/cm^2 (11.5 psi, 79 kPa) of pressure to the boost compensator.

(d) (1HD-T (w/ BACS))
Apply 1.29 kg/cm^2 (18.3 psi, 127 kPa) of pressure to the boost compensator.

(e) (1HD-T (w/ PCS))
Apply vacuum to the PCS actuator.

(f) Measure the injection volume.

Item	Pump rpm	No. of measuring strokes	Injection volume cc (cu in.)
1PZ	1,200	200	11.78 – 12.18 (0.72 – 0.74)
1HZ	1,200	200	11.80 – 12.20 (0.72 – 0.74)
1HD-T (w/o BACS)	1,800	200	13.58 – 14.18 (0.83 – 0.87)
1HD (w/ BACS)	1,800	200	13.14 – 13.74 (0.80 – 0.84)

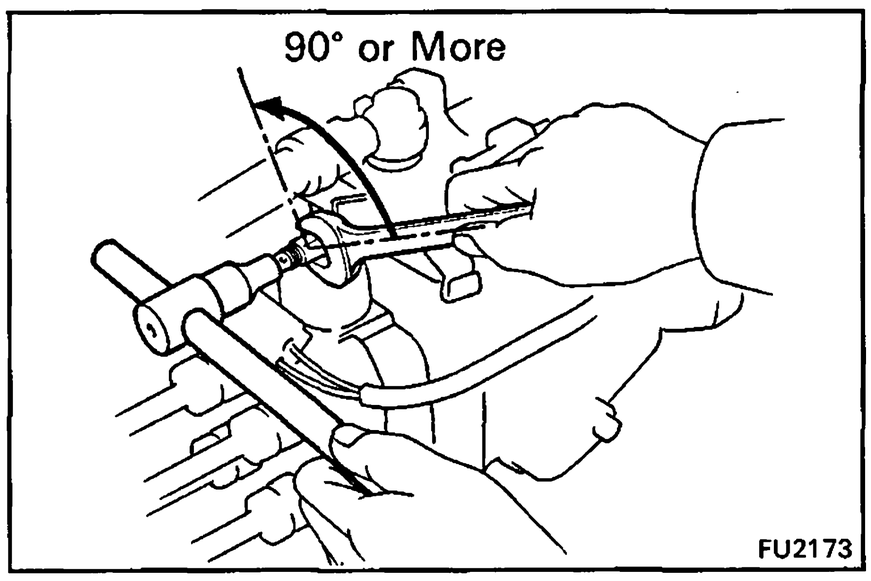

(g) Remove the collar seal as follows:

- Hold the full load set screw, and release the collar seal from the spot weld by turning the lock nut counterclockwise by 90° or more.

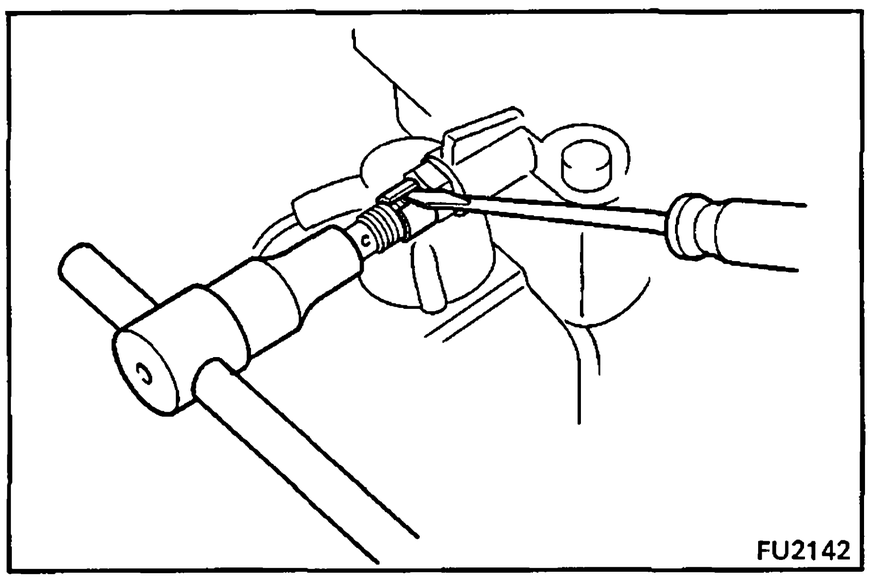

- Using a screwdriver, remove the collar seal.

(h) (w/ Wire Seal Type)
Cut off the wire seal.

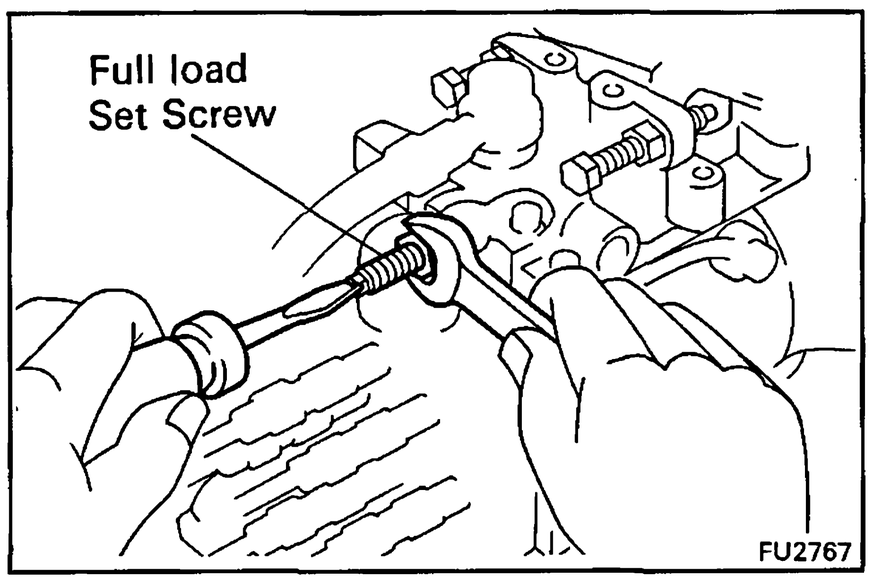

(i) Adjust by turning the full load set screw.

HINT: The injection volume will increase about 3 cc (0.18 cu in.) with each 1/2 turn of the screw.

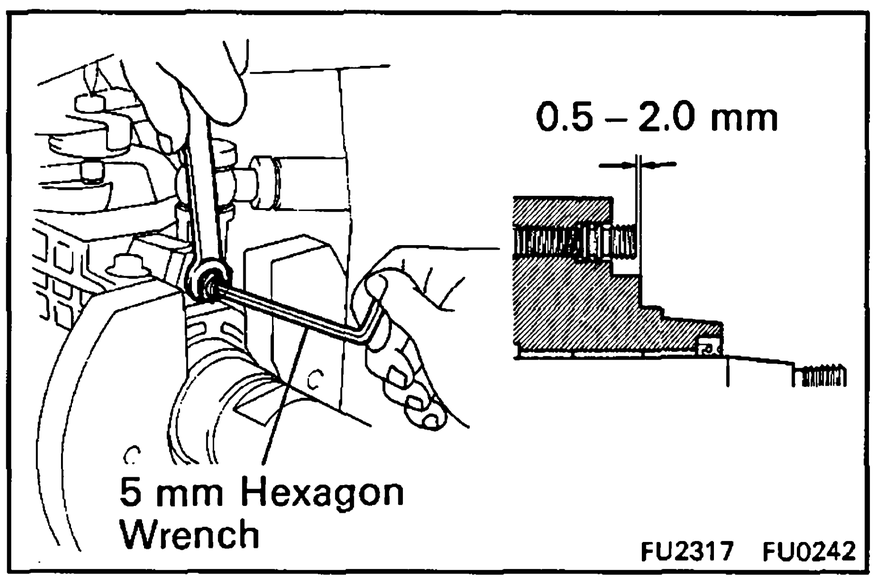

3. **(w/o HIGH ALTITUDE)**
PRE-SETTING OF LOAD SENSING TIMER

Using a 5 mm hexagon wrench, adjust the protrusion of the governor shaft.

Protrusion: 0.5 – 2.0 mm (0.020 – 0.079 in.)

4. **PRE-SET MAXIMUM SPEED**

(a) Set the adjusting lever to maximum position.

(b) (1PZ (w/ HAC) and 1HZ (w/ HAC))
Apply 760 ± 1.5 mmHg (29.92 ± 0.06 in.Hg, 101.3 ± 0.2 kPa) absolute pressure.

(c) (1HD-T (w/o BACS))
Apply 0.81 kg/cm^2 (11.5 psi, 79 kPa) of pressure to the boost compensator.

(d) (1HD-T (w/ BACS))
Apply 1.29 kg/cm^2 (18.3 psi, 127 kPa) of pressure to the boost compensator.

(e) (1HD-T (w/ PCS))
Apply vacuum to the PCS actuator.

(f) Measure the injection volume.

Item	Pump rpm	No. of measuring strokes	Injection volume cc (cu in.)
1PZ	2,300	200	4.0 – 6.0 (0.24 – 0.37)
1HZ	2,300	200	3.0 – 5.0 (0.18 – 0.31)
1HD-T	2,200	200	3.0 – 5.0 (0.18 – 0.31)

(g) Cut off the seal wire.

(h) Adjust the injection volume with the maximum speed adjusting screw.

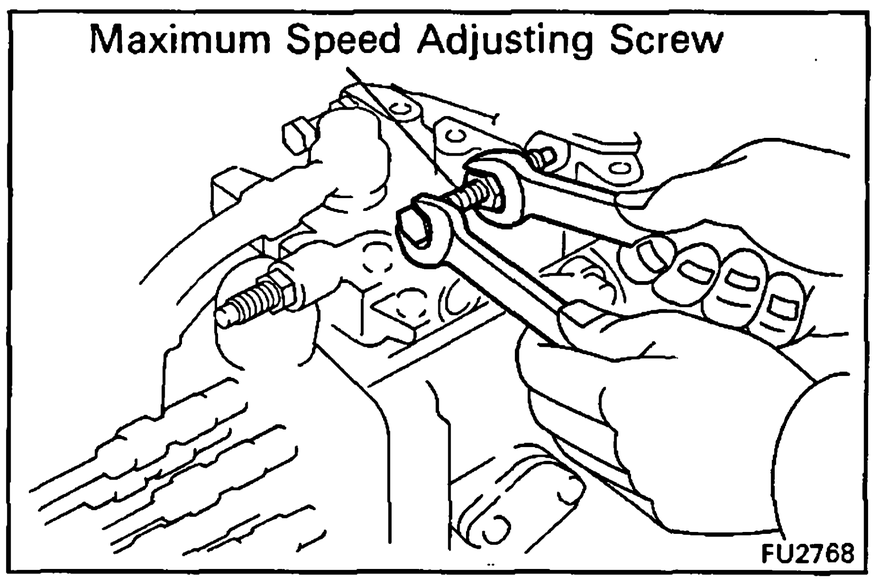

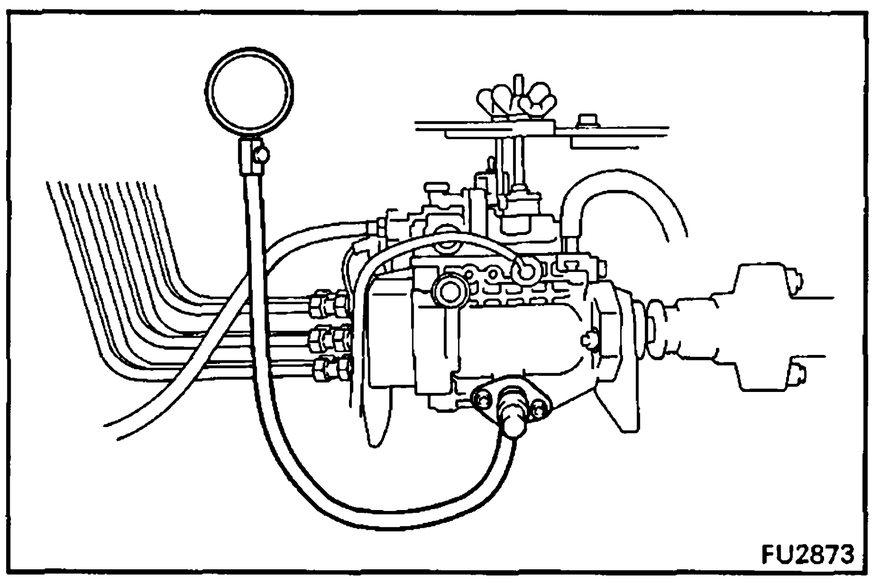

5. **ADJUST PUMP INNER PRESSURE**

(a) Measure the pump inner pressure at the below listed rpm.

Item	Pump rpm	Inner pressure kg/cm² (psi, kPa)
1PZ	500	2.45 – 3.05 (35 – 43, 240 – 299)
	2,000	6.4 – 7.0 (91 – 100, 628 – 686)
1HZ	500	2.5 – 3.1 (36 – 44, 245 – 304)
	2,000	7.1 – 7.7 (101 – 110, 696 – 755)
1HD-T (w/o BACS)	400	2.2 – 3.1 (31 – 44, 216 – 304)
	1,900	8.1 – 8.4 (115 – 119, 794 – 824)
	2,200	9.0 (128, 883) or less
1HD-T (w/ BACS)	400	2.7 – 3.6 (38 – 51, 265 – 353)
	2,200	8.7 – 9.0 (124 – 128, 853 – 893)

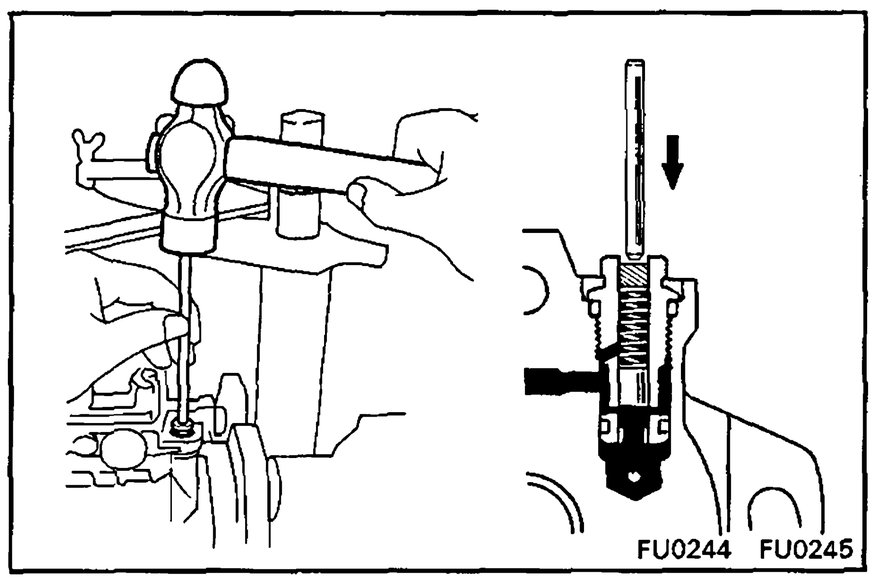

(b) If the pressure is low, adjust by lightly tapping the regulator valve piston while watching the pressure gauge.

HINT: If the pressure is too high or if the regulator valve was tapped in too far, the regulator valve must be replaced.

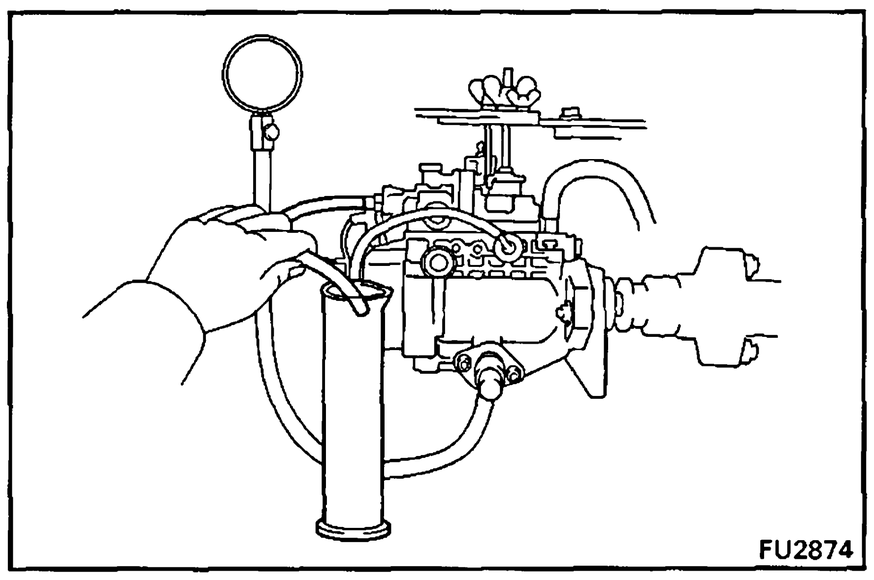

6. CHECK OVERFLOW VOLUME

Measure the overflow volume at the below listed rpm.

Item	Pump rpm	Overflow volume cc/min. (cc in./min.)
1PZ and 1HZ	2,000	366 – 800 (22.3 – 48.8)
1HD-T	1,900	583 – 1,083 (35.6 – 66.1)

HINT: Always use the overflow screw installed on the pump to be adjusted.

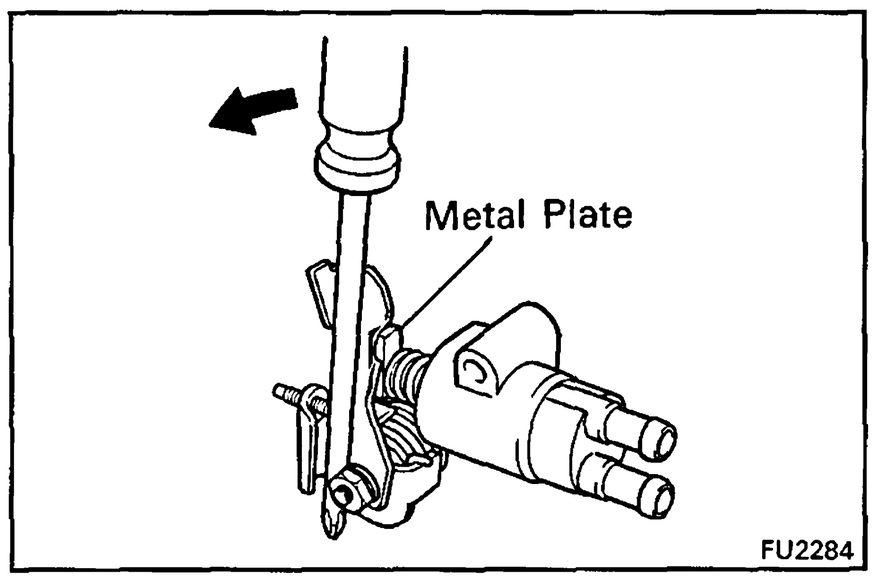

7. (w/ ACSD) RELEASE COLD STARTING SYSTEM FOR NEXT INSPECTIONS

(a) Using a screwdriver, turn the cold starting lever counterclockwise approx. 20°.

(b) Put a metal plate (thickness of 3.5 – 7.5 mm (0.138 – 0.295 in.)) between the cold starting lever and thermo wax plunger.

HINT: Keep the cold starting system released until all measurements and adjustments are finished.

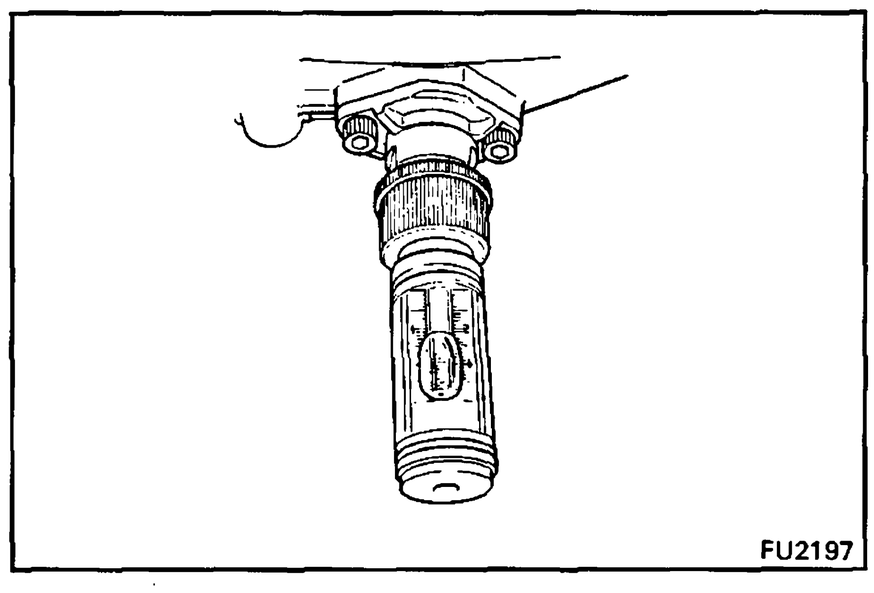

8. ADJUST TIMER

(a) Set the timer measuring device at zero.

(b) Measure the timer piston stroke at the below listed rpms.

Item	Pump rpm	Timer piston stroke mm (in.)
1PZ	600	0.58 – 1.58 (0.0288 – 0.0622)
	1,200	3.02 – 4.02 (0.1189 – 0.1583)
	1,600	4.65 – 5.65 (0.1830 – 0.2224)
	2,000	6.28 – 7.28 (0.2472 – 0.2866)
	2,500	6.88 – 7.88 (0.2709 – 0.3102) (LST non-opeational)
1HZ	600	0.43 – 1.43 (0.0169 – 0.0563)
	1,200	3.23 – 4.23 (0.1272 – 0.1665)
	1,600	5.09 – 6.09 (0.2004 – 0.2398)
	2,000	6.88 – 7.88 (0.2709 – 0.3102)
	2,500	6.88 – 7.88 (0.2709 – 0.3102) (LST non-opeational)
1HD-T (Europe)	1,300	1.4 – 2.4 (0.055 – 0094)
	1,440	3.0 – 4.0 (0.118 – 0.157)
	1,700	5.9 – 6.9 (0.232 – 0.272)
	1,900	7.7 – 8.7 (0.303 – 0.343)
1HD-T (Others)	800	1.05 – 2.05 (0.0413 – 0.0807)
	1,400	4.9 – 5.9 (0.193 – 0.232)
	1,700	6.42 – 7.42 (0.2528 – 0.2921)
	1,900	7.7 – 8.7 (0.303 – 0.343)

HINT: Check that the hysteresis is within 0.3 mm (0.012 in.)

(c) Using a 5 mm hexagon wrench, adjust by the timer adjusting screw.

HINT: The stroke will decrease with turn to clockwise and increase with turn to counterclockwise.

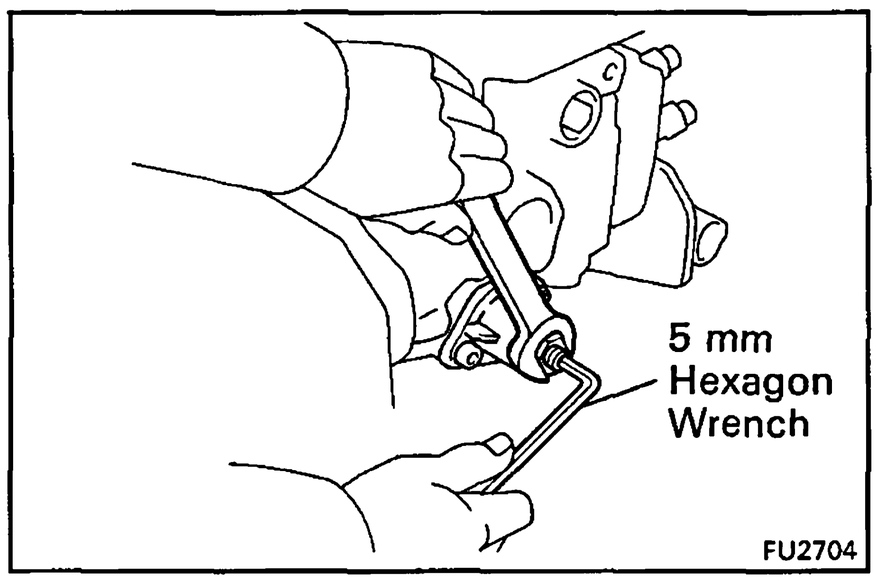

9. **(1HD-T)**
CHECK AIR TIGHTNESS OF BOOST COMPENSATOR

(a) Apply 1.00 kg/cm^2 (14.2 psi, 98 kPa) of pressure to the boost compensator.

(b) Measure the time it takes for the pressure to drop to 0.97 kg/cm^2 (13.8 psi, 95 kPa).

Pressure drop: 10 seconds or more

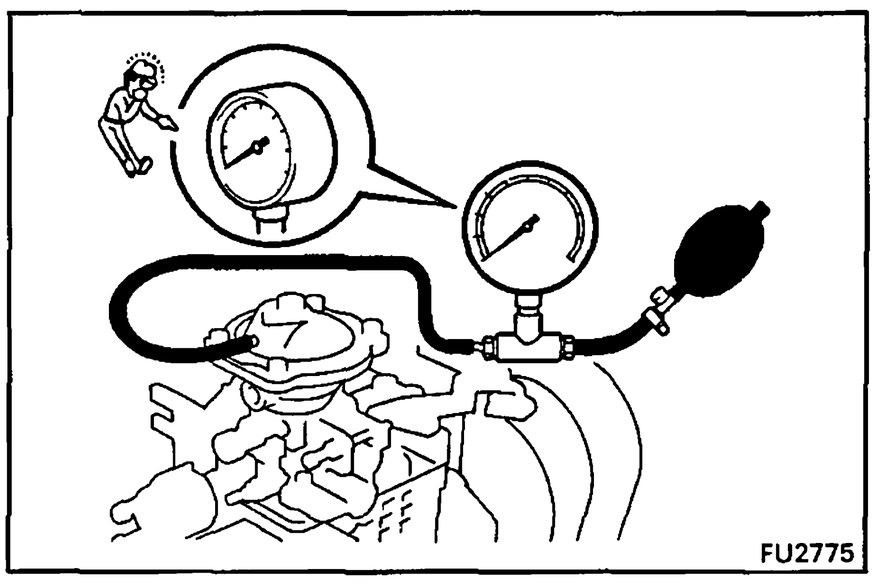

10. **ADJUST FULL LOAD INJECTION VOLUME**

(a) The adjusting lever angle for the adjustment below should be as shown in the illustration.

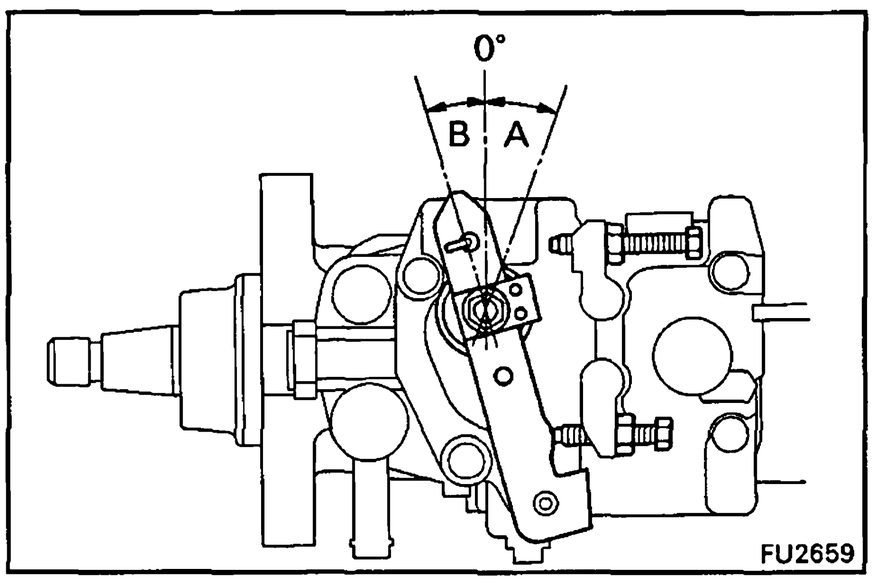

Adjusting lever angle	
A (Maximum speed side)	B (Idle speed side)
Plus 21 – 31°	Minus 12 – 22°

(b) (1PZ (w/ HAC) and 1HZ (w/ HAC))
Apply 760 ± 1.5 mmHg (29.92 ± 0.06 in.Hg, 101.3 ± 0.2 kPa) absolute pressure.

(c) (1HD-T (w/o BACS))
Apply 081 kg/cm^2 (11.5 psi, 79 kPa) of pressure to the boost compensator.

(d) (1HD-T (w/ BACS))
Apply 1.29 kg/cm^2 (18.3 psi, 127 kPa) of pressure to the boost compensator.

(e) (1HD-T (w/ PCS))
Apply vacuum to the PCS actuator.

(f) Measure the full load injection volume.

Item	Adjusting lever angle	Pump rpm	No. of measuring strokes	Injection volume cc (cc in.)
1PZ	Plus 21 – 31°	1,200	200	11.78 – 12.18 (0.72 – 0.74)
1HZ	Plus 21 – 31°	1,200	200	11.80 – 12.20 (0.72 – 0.74)
1HD-T (w/o BACS)	Plus 21 – 31°	1,100	200	13.58 – 14.18 (0.83 – 0.87)
1HD-T (w/ BACS)	Plus 21 – 31°	1,100	200	13.14 – 13.74 (0.80 – 1.84)

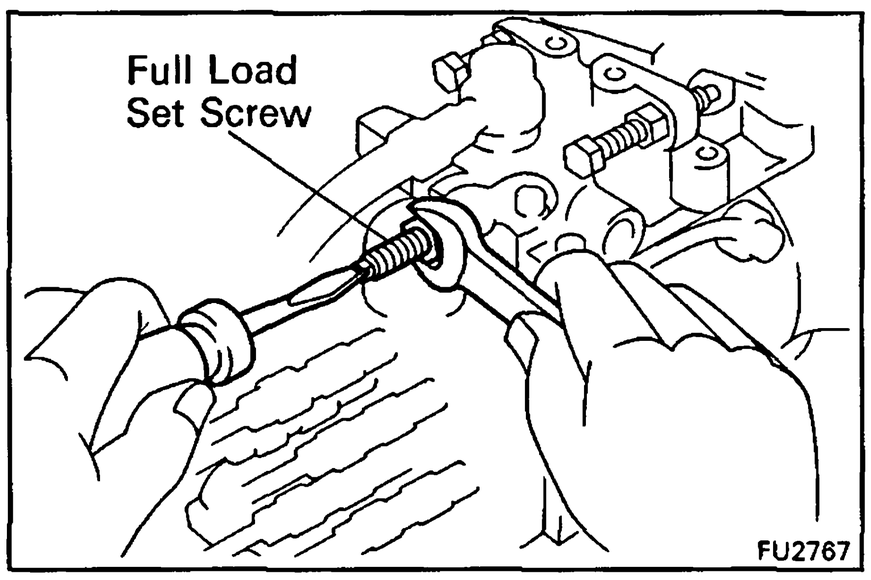

(g) Adjust by turning the full load set screw.

HINT: The injection volume will increase about 3 cc (0.18 cu in.) with each 1/2 turn of the screw.

(h) (1HD-T (w/ PCS))
Release the vacuum to the PCS actuator.

(i) (1HD-T (w/ PCS))
Measure the injection volume.

Pump rpm	No. of measuring strokes	Injection volume cc (cu in.)
1,100	200	11.0 – 12.2 (0.67 – 0.74)

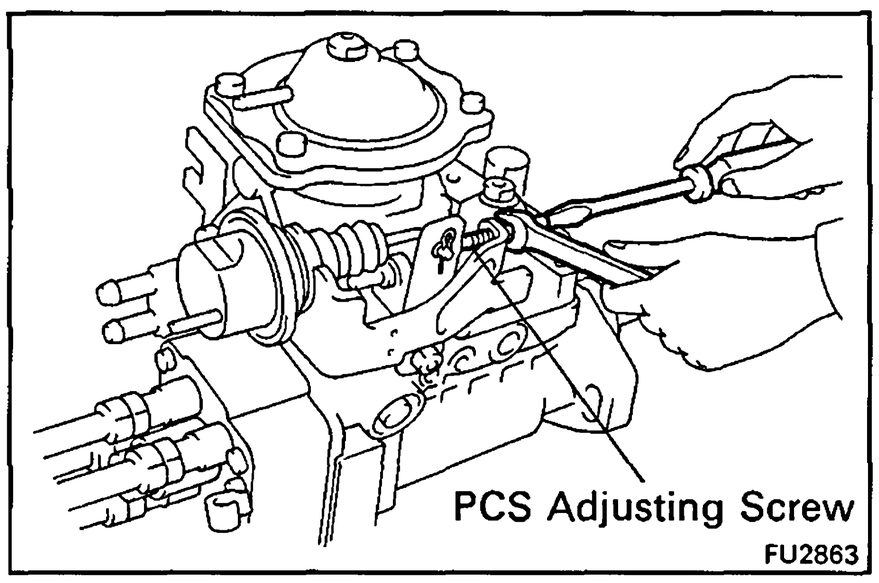

(j) (1HD-T (w/ PCS))
Adjust by turning the PCS adjusting screw.

HINT: By screwing in the adjusting screw, the injection volume is increased; unscrewing the adjusting screw decreases the injection volume.

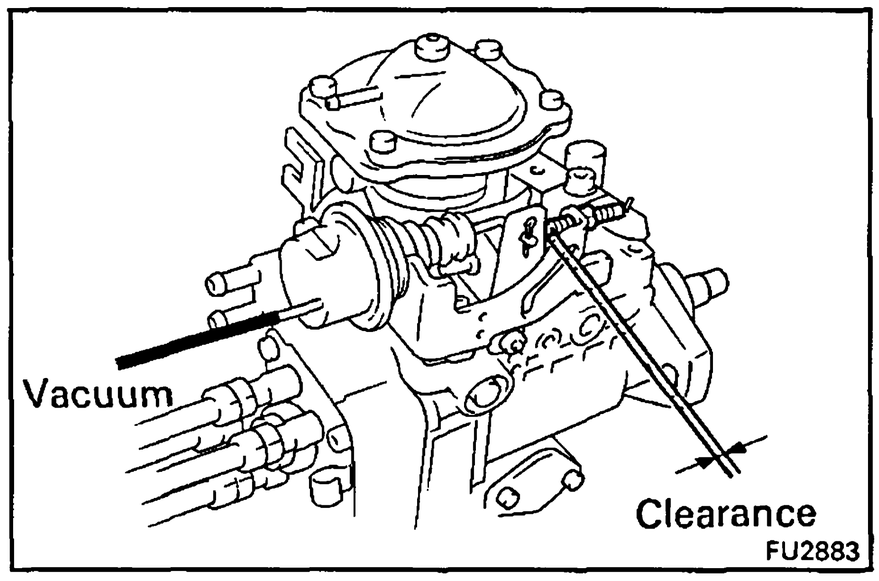

(k) (1HD-T (w/ PCS))
Apply vacuum to the PCS actuator and check that the clearance between No.1 PCS lever and adjusting screw at least 3 mm (0.12 in.).

11. ADJUST MAXIMUM SPEED

(a) (1PZ (w/ HAC) and 1HZ (w/ HAC))
Apply 760 ± 1.5 mmHg (29.92 ± 0.06 in.Hg, 101.3 ± 0.2 kPa) absolute pressure.

(b) (1HD-T (w/o BACS))
Apply 0.81 kg/cm^2 (11.5 psi, 79 kPa) of pressure to the boost compensator.

(c) (1HD-T (w/ BACS))
Apply 1.29 kg/cm^2 (18.3 psi, 127 kPa) of pressure to the boost compensator.

(d) (1HD-T (w/ PCS))
Apply vacuum to the PCS actuator.

(e) Measure the injection volume at each pump rpm.

Item	Adjusting lever angle	pump rmp	No. of measuring strokes	Injection volume cc (cu in.)	Remarks
1PZ	Plus 21 – 31°	2,300	200	4.0 – 6.0 (0.24 – 0.37)	Adjust
		2,500		1.0 (0.06) or less	–
1HZ	Plus 21 – 31°	2,300	200	3.0 – 5.0 (0.18 – 0.31)	Adjust
		2,550		1.0 (0.06) or less	–
1HD-T	Plus 21 – 31°	2,200	200	3.0 – 5.0 (0.18 – 0.31)	Adjust
		2,350		1.0 (0.06) or less	–

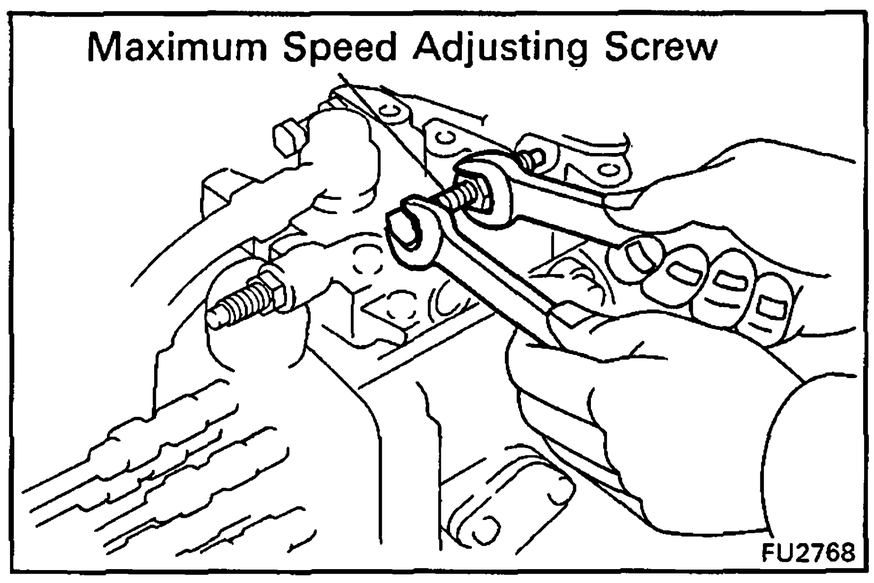

(f) Adjust by turning the maximum speed adjusting screw.

12. CHECK INJECTION VOLUME

(a) (1PZ (w/ HAC) and 1HZ (w/ HAC))
Apply 760 ± 1.5 mmHg (29.92 ± 0.06 in.Hg, 101.3 ± 0.2 kPa) absolute pressure.

(b) (1PZ and 1HZ)
Measure the injection volume at each pump rpm.

Item	Adjusting lever angle	Pump rpm	No. of measuring strokes	Injection volume cc (cu in.)	Variation limit cc (cu in.)	Remarks
1PZ	Plus 21 – 31°	1,200	200	11.78 – 12.18 (0.72 – 0.74)	0.4 (0.02)	Basic full-load injection volume
		100		9.60 – 14.40 (0.59 – 0.88)	1.2 (0.07)	Volume during starting
		500		10.56 – 11.76 (0.64 – 0.72)	0.6 (0.04)	–
		2,000		11.62 – 12.82 (0.71 – 0.78)	0.6 (0.04)	–
1HZ	Plus 21 – 31°	1,200	200	11.80 – 12.20 (0.72 – 0.74)	0.4 (0.03)	Basic full-load injection volume
		100		9.60 – 14.40 (0.59 – 0.88)	1.2 (0.07)	Volume during starting
		500		9.74 – 10.94 (0.59 – 0.67)	0.6 (0.04)	–
		2,000		10.96 – 12.16 (0.67 – 0.74)	0.6 (0.04)	–

(c) (1HD-T (w/ PCS))
Apply vacuum to the PCS actuator.

(d) (1HD-T)
Measure the injection volume at each pump rpm and boost pressure.

Item	Adjusting lever angle	Pump rpm	Boost pressure kg/cm² (psi, kPa)	No. of measuring strokes	Injection volume cc (cu in.)	Variation limit cc (cu in.)	Remarks
1HD-T (Europe)	Plus 21 – 31°	1,100	0.81 (11.5, 79)	200	13.52 – 14.72 (0.83 – 0.90)	0.6 (0.04)	Basic full-load injection volume
		100	0 (0, 0)		11.60 – 16.40 (0.71 – 1.00)	1.2 (0.07)	Volume during starting
		500	0 (0, 0)		8.32 – 9.12 (0.51 – 0.56)	0.6 (0.04)	–
		1,800	0.81 (11.5, 79)		13.58 – 14.18 (0.83 – 0.87)	1.2 (0.07)	–
1HD-T (Others) (w/o BACS)	Plus 21 – 31°	1,100	0.81 (11.5, 79)	200	11.70 – 12.90 (0.71 – 0.79)	0.6 (0.04)	Basic full-load injection volume
		100	0 (0, 0)		11.60 – 16.40 (0.71 – 1.00)	1.2 (0.07)	Volume during starting
		500	0 (0, 0)		8.68 – 9.48 (0.53 – 0.58)	0.6 (0.04)	–
		1,800	0.81 (11.5, 79)		13.58 – 14.18 (0.83 – 0.87)	1.2 (0.07)	–
1HD-T (Others) (w/ BACS)	Plus 21 – 31°	1,100	1.29 (18.3, 127)	200	11.70 – 12.90 (0.71 – 0.79)	0.6 (0.04)	Basic full-load injection volume
		100	0.50 (7.1, 49)		11.60 – 16.40 (0.71 – 1.00)	1.2 (0.07)	Volume during starting
		500	0.50 (7.1, 49)		8.20 – 9.20 (0.50 – 0.56)	0.6 (0.04)	–
		1,800	1.29 (18.3, 127)		13.14 – 14.74 (0.80 – 0.84)	1.2 (0.07)	–

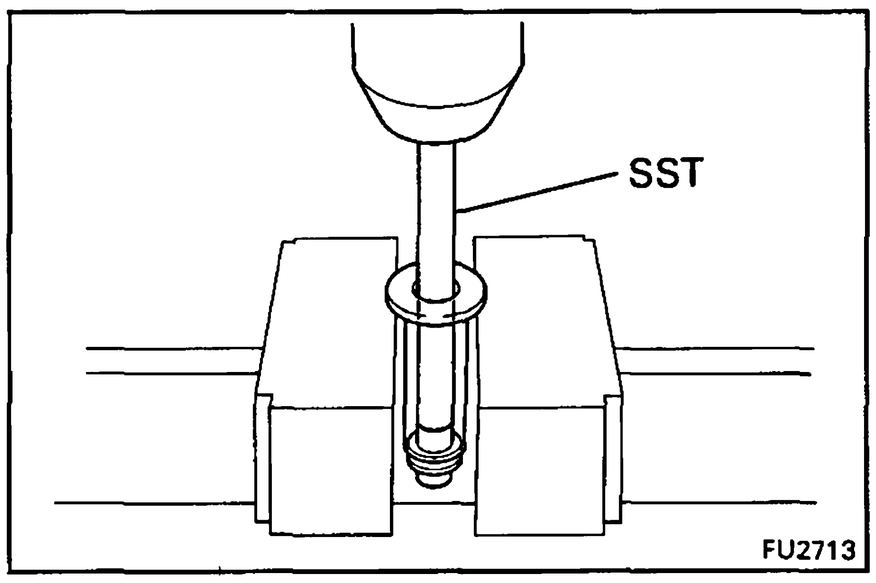

If the injection volume at 100 rpm is not as specified, replace the governor sleeve plug as follows:

- Using SST and a press, press out the sleeve plug assembly from the governor sleeve.

SST 09236-00101 (09237-00070)

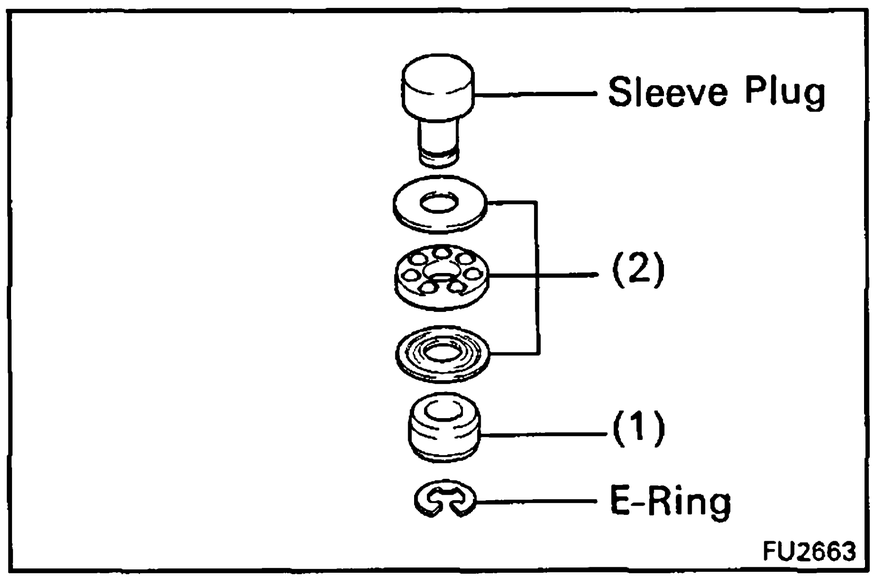

- Remove the E-ring and following parts from the sleeve plug:

(1) Stop ring

(2) Bearing and two bearing retainers

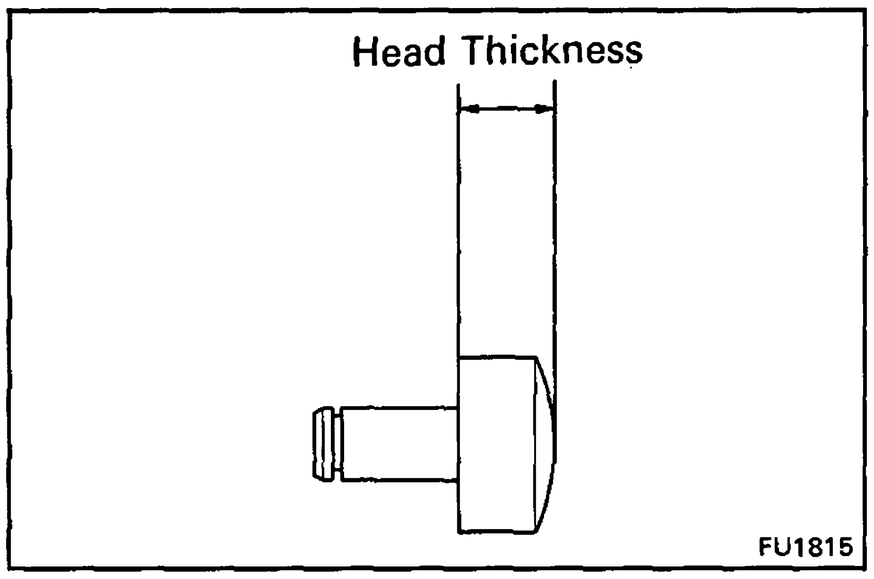

- Measure the head thickness of the sleeve plug, and select a new sleeve plug.

Sleeve plug head thichness for 1PZ and 1HZ mm (in.)		
3.0 (0.118)	3.5 (0.138)	4.0 (0.158)
3.1 (0.122)	3.6 (0.142)	4.1 (0.161)
3.2 (0.126)	3.7 (0.146)	4.2 (0.165)
3.3 (0.130)	3.8 (0.150)	
3.4 (0.134)	3.9 (0.154)	

Sleeve plug head thichness for 1HD-T mm (in.)		
3.0 (0.118)	4.3 (0.169)	5.6 (0.220)
3.1 (0.122)	4.4 (0.173)	5.7 (0.224)
3.2 (0.126)	4.5 (0.177)	5.8 (0.228)
3.3 (0.130)	4.6 (0.181)	5.9 (0.232)
3.4 (0.134)	4.7 (0.185)	6.0 (0.236)
3.5 (0.138)	4.8 (0.189)	6.1 (0.240)
3.6 (0.142)	4.9 (0.193)	6.2 (0.244)
3.7 (0.146)	5.0 (0.197)	6.3 (0.248)
3.8 (0.150)	5.1 (0.201)	6.4 (0.252)
3.9 (0.154)	5.2 (0.205)	6.5 (0.256)
4.0 (0.158)	5.3 (0.209)	6.6 (0.260)
4.1 (0.161)	5.4 (0.213)	
4.2 (0.165)	5.5 (0.216)	

HINT: Lengthening the plug 0.1 mm (0.004 in.) will decrease injection volume by 0.6 cc (0.04 cu in.).

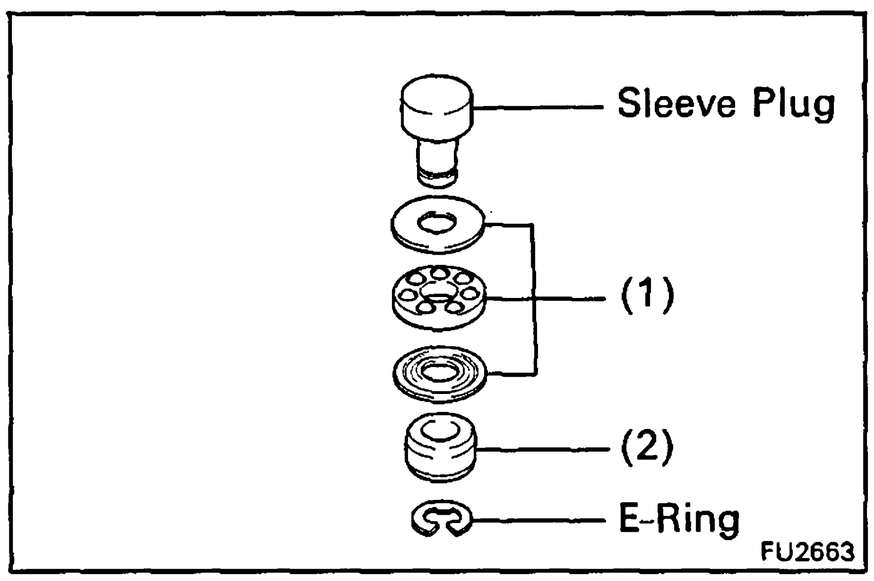

- Install the following parts to the new sleeve plug with a new E-ring:

(1) Bearing and two retainers

(2) Stop ring

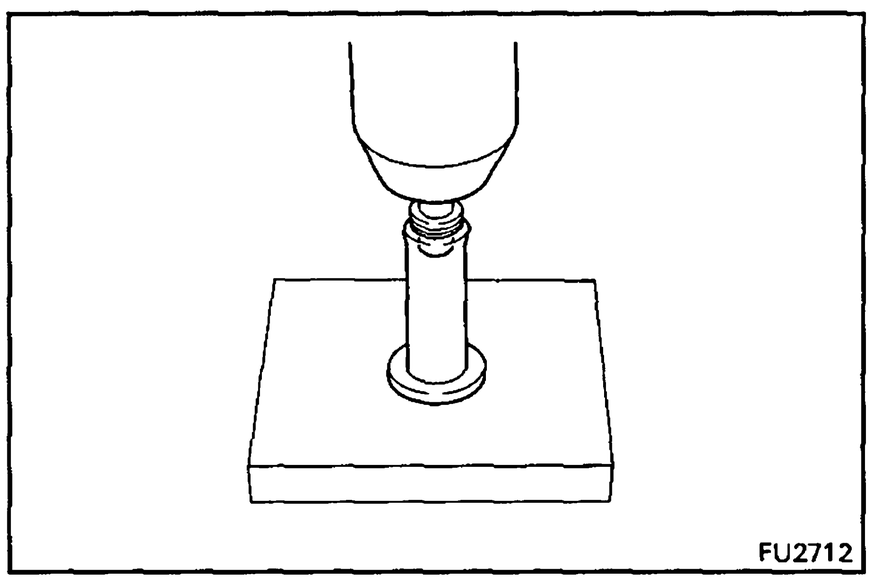

- Using a press, press in the sleeve plug assembly to the governor sleeve.

13. (1HD-T)
ADJUST FULL LOAD MINIMUM INJECTION VOLUME

(a) Measure the injection volume.

Item	Pump rpm	No. of measuring strokes	Injection volume cc (cu in.)
Europe	500	200	8.32 – 9.12 (0.51 – 0.56)
Others (w/o BACS)	500	200	8.68 – 9.48 (0.53 – 0.58)
Others (w/ BACS)	500	200	7.54 – 8.34 (0.46 – 0.51)

(b) Using a hexagon wrench, adjust the timer slide pin.

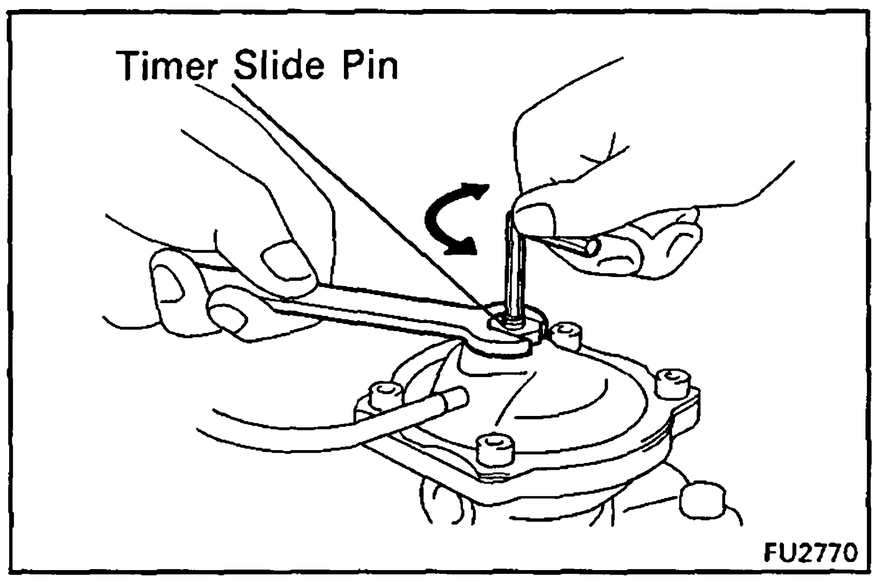

14. (1HD-T)
ADJUST BOOST COMPENSATOR CHARACTERISTIC

(a) Apply pressure to the boost compensator.

(b) Measure the injection volume bushing.

Item	Pump rpm	Boost pressure kg/cm² (psi, kPa)	No. of measuring strokes	Injection volume cc (cu in.)
Europe	1,100	0.48 (6.8, 47)	200	12.44 – 13.44 (0.76 – 0.82)
Others (w/o BACS)	1,100	0.54 (7.7, 53)	200	10.86 – 11.86 (0.66 – 0.72)
Others (w/ BACS)	500	0.50 (7.1, 49)	200	8.20 – 9.20 (0.50 – 0.56)

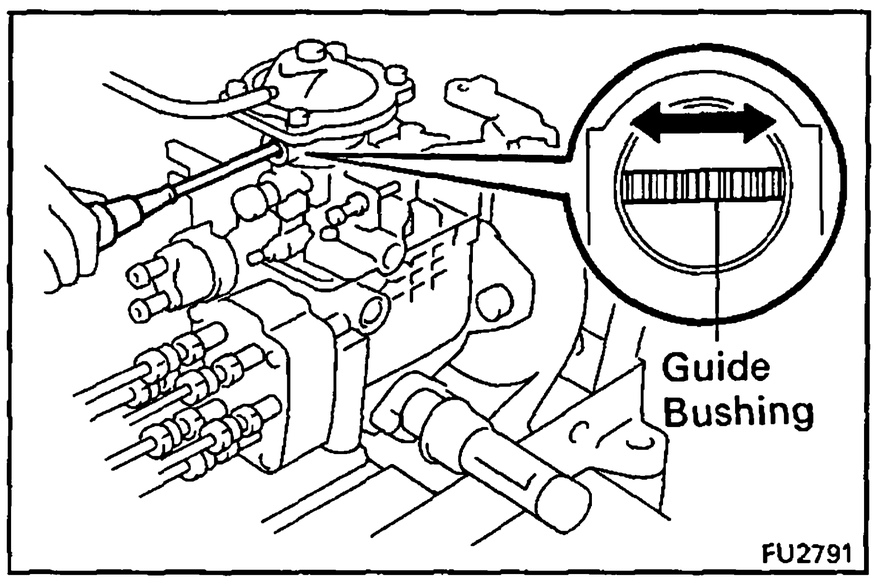

(c) Using a screwdriver, adjust the guide bushing.

HINT: When the guide bushing is turned clockwise, as seen from above, the injection volume will increase.

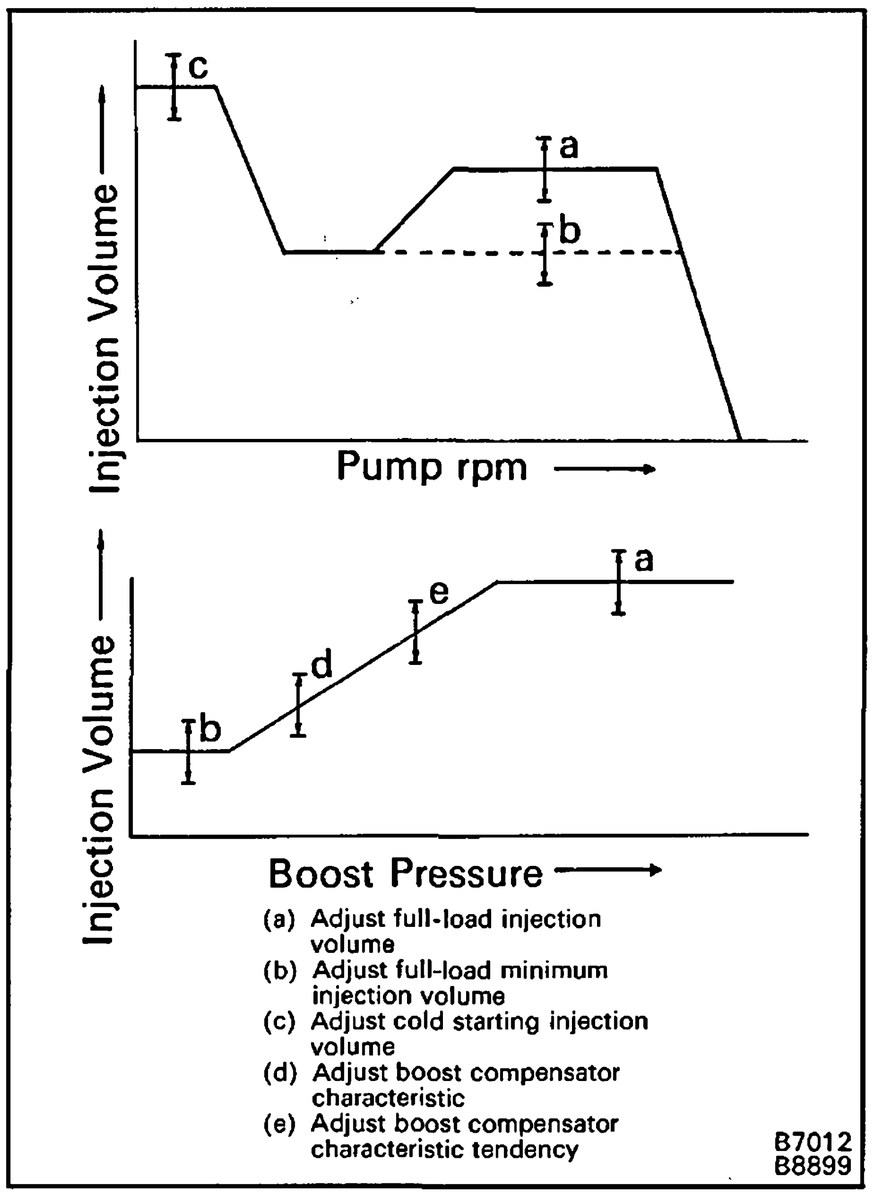

15. (1HD-T)
INSPECT BOOST COMPENSATOR CHARACTERISTIC TENDENCY

(a) Apply pressure to the boost compensator.

(b) Measure injection volume.

Item	Pump rpm	Boost pressure kg/cm² (psi, kPa)	No. of measuring strokes	Injection volume cc (cu in.)
Europe	1,100	0.27 (3.8, 26)	200	10.50 – 11.70 (0.64 – 0.71)
Others (w/o BACS)	1,100	0.41 (5.8, 40)	200	9.48 – 10.68 (0.58 – 0.65)
Others (w/ BACS)	500	0.81 (11.5, 79)	200	9.80 – 11.00 (0.60 – 0.67)

16. (1HD-T)
CHECK HYSTERESIS

(w/o BACS)

Compare the injection volume when the boost compensator pressure is lowered from 0.81 kg/cm² (11.5 psi, 79 kPa) to 0 kg/cm² (0 psi, 0 kPa) and, conversely, when it is raised from zero.

(w/ BACS)

Compare the injection volume when the boost compensator pressure is lowered from 1.25 kg/cm² (18.3 psi, 127 kPa) to 0 kg/cm² (0 psi, 0 kPa) and, conversely, when it is raised from zero.

HINT: Make measurements after moving the adjusting lever between idle and maximum three times for each lowering of the pressure.

Item	Pump rpm	Boost pressure kg/cm² (psi, kPa)	No. of measuring strokes	Injection volume cc (cu in.)	Hysteresis cc (cu in.)
Europe	1,100	0.81 (11.5, 79)	200	13.52 – 14.72 (0.82 – 0.90)	–
	1,100	0.48 (6.8, 47)	200	12.44 – 13.44 (0.76 – 0.82)	–
	1,100	0.27 (3.8, 26)	200	10.50 – 11.70 (0.64 – 0.71)	0.3 (0.02) or less
	1,100	0 (0, 0)	200	9.70 – 11.10 (0.59 – 0.68)	–
Others (w/o BACS)	1,100	0.81 (11.5, 79)	200	11.70 – 12.90 (0.71 – 0.79)	–
	1,100	0.54 (7.7, 53)	200	10.86 – 11.86 (0.66 – 0.72)	–
	1,100	0.41 (5.8, 40)	200	9.48 – 10.68 (0.58 – 0.65)	0.3 (0.02) or less
	1,100	0 (0, 0)	200	8.62 – 10.02 (0.53 – 0.61)	–

Cont'd

Item	Pump rpm	Boost pressure kg/cm² (psi, kPa)	No. of measuring strokes	Injection volume cc (cu in.)	Hysteresis cc (cu in.)
Others (w/ BACS)	1,100	1.29 (18.3, 127)	200	11.70 – 12.90 (0.71 – 0.79)	–
	500	0.81 (11.5, 79)	200	9.80 – 11.00 (0.60 – 0.67)	0.3 (0.02) or less
	500	0.50 (7.1, 49)	200	8.20 – 9.20 (0.50 – 0.56)	–
	500	0 (0, 0)	200	7.54 – 8.34 (0.46 – 0.51)	–

If not within standard value, check each sliding part of the boost compensator and check whether or not there is any oil.

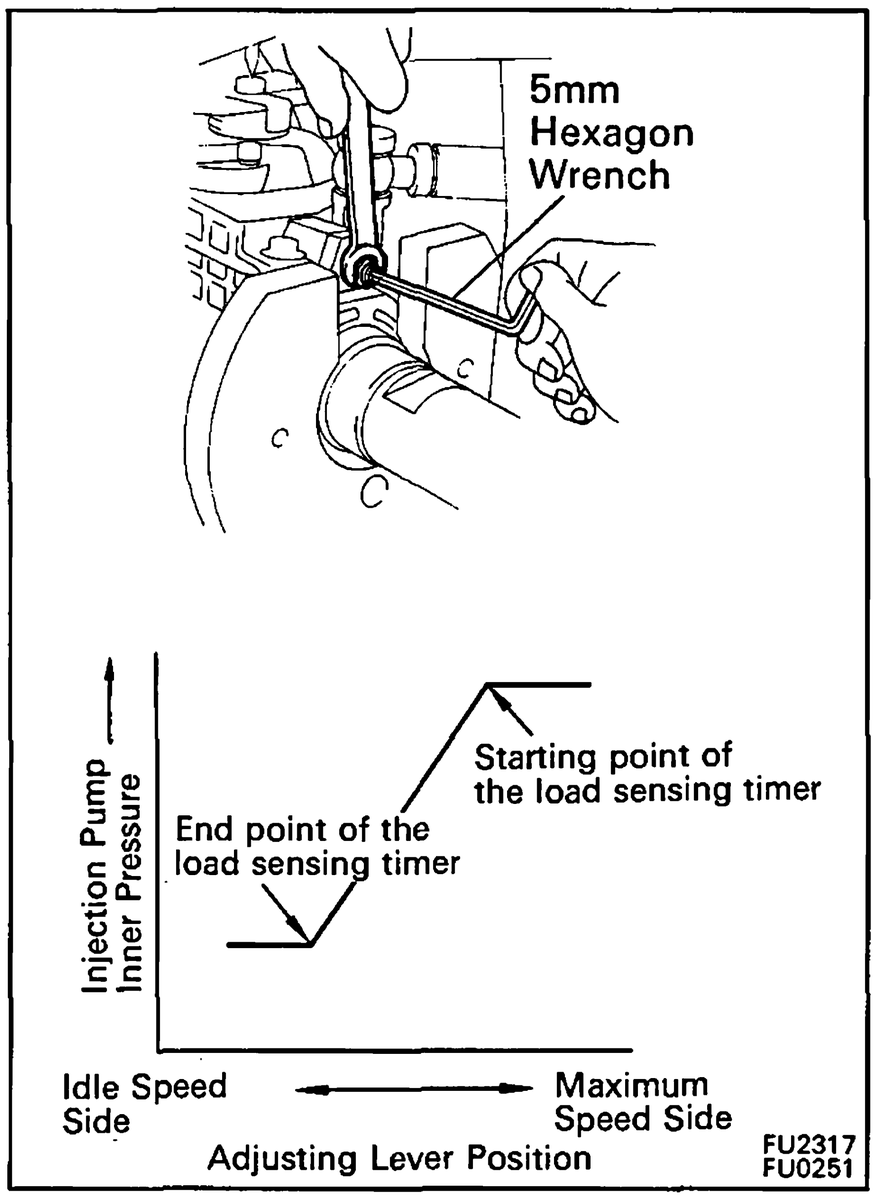

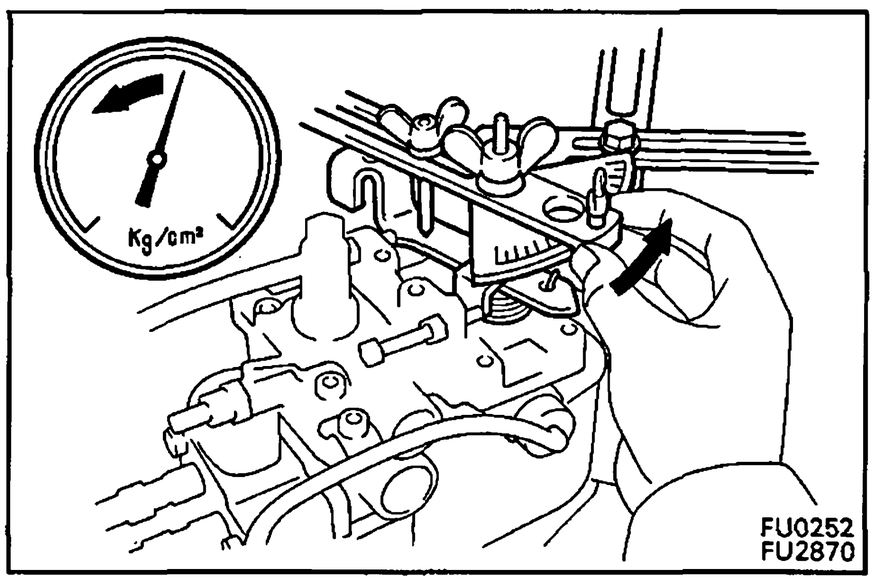

17. (w/o HIGH ALTITUDE)
ADJUST LOAD SENSING TIMER

(a) Using a 5 mm hexagon wrench, adjust the starting and end points of the load sensing timer by turning the governor shaft.

(b) (1PZ (w/ HAC) and 1HZ (w/ HAC))
Apply 760 ± 1.5 mmHg (29.92 ± 0.06 in.Hg, 101.3 ± 0.2 kPa) absolute pressure.

(c) (1HD-T (w/o BACS))
Apply 0.81 kg/cm² (11.5 psi, 79 kPa) of pressure to the boost compensator.

(d) (1HD-T (w/ BACS))
Apply 1.29 kg/cm² (18.3 psi, 127 kPa) of pressure to the boost compensator.

(e) (1HD-T (w/ PCS))
Apply vacuum to the PCS actuator.

(f) Measure the injection volume.

Item	Adjusting lever position	Pump rpm	No. of measuring strokes
1PZ, 1HZ	Maximum speed side	1,600	200
1HD-T		1,800	

(g) Slowly move the adjusting lever from the maximum speed side to the idle speed side, and secure it at the point where the pump inner pressure begins to drop.

(h) Measure the injection volume at the drop point (starting point).

Item	Pump rpm	No. of measuring strokes	Injection volume cc (cu in.)
1PZ	1,600	200	Measured value at step (f) minus 1.4 (0.09) ± 0.3 (0.02)
1HZ	1,600	200	Measured value at step (f) minus 1.4 (0.09) ± 0.3 (0.02)
1HD-T (Europe)	1,800	200	Measured value at step (f) minus 1.6 (0.10) ± 0.6 (0.04)
1HD-T (Others)	1,800	200	Measured value at step (f) minus 1.2 (0.07) ± 0.2 (0.01)

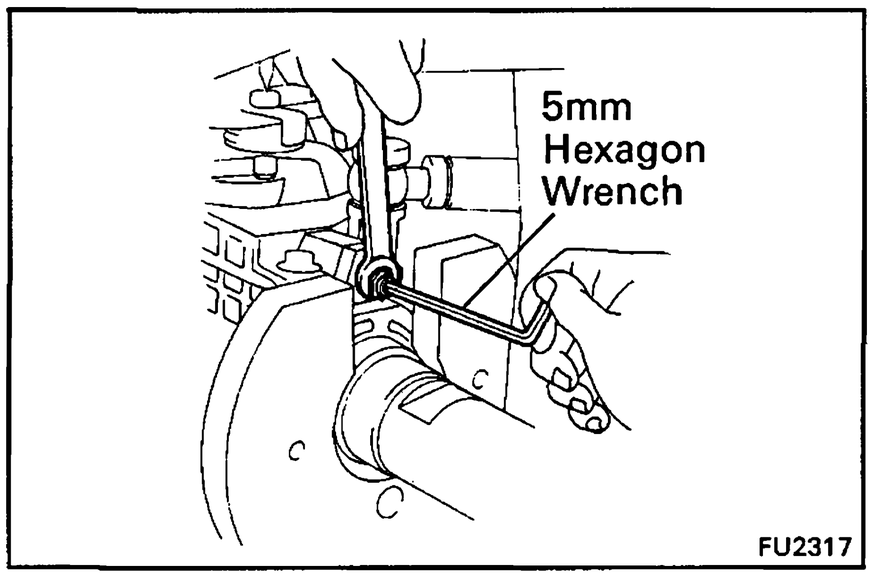

(i) Using a 5 mm hexagon wrench, adjust by turning the governor shaft, and perform the measurement again it is as specified.

HINT: The injection volume will increase approx. 3 cc (0.2 cu in.) with each 1/2 turn of the governor shaft.

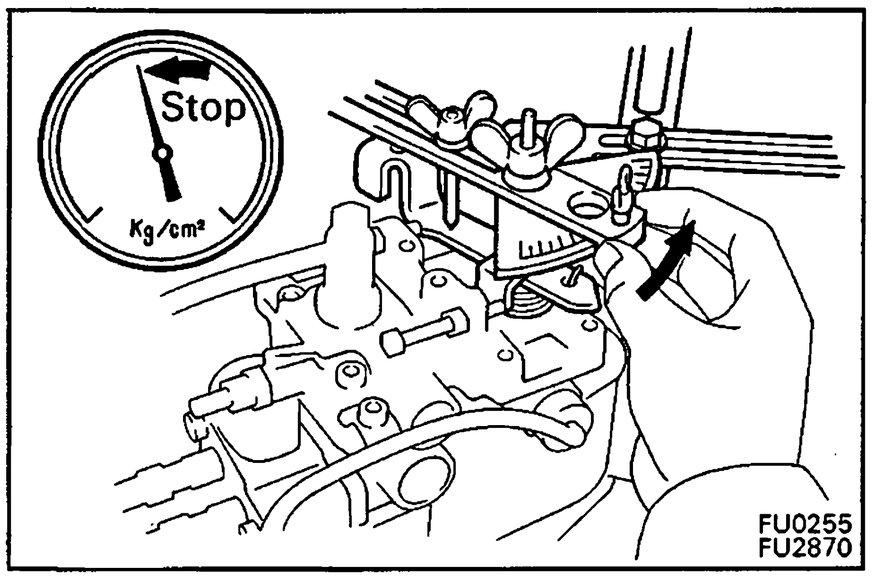

(j) (1PZ and 1HZ)
Check the end point injection volume by slowly moving the adjusting lever from the maximum speed side to the idle speed side, and secure it at the point where the pump inner pressure stops dropping.

Item	Pump rpm	No. of measuring strokes	Injection volume cc (cu in.)
1PZ	1,600	200	9.08 – 9.88 (0.55 – 0.60)
1HZ	1,600	200	8.2 (0.50) or more

(k) (1HD-T (Europe))
Check the timer piston stroke when the the pump rpm is 1,440 rpm and injection volume is 8.4 – 9.2 cc (0.51 – 0.56 cu in.).

Timer piston stroke: 2.0 mm (0.079 in.) or less

(l) (1HD-T (Others))
Check the injection volume when the pump rpm is 1,440 rpm and timer piston stroke is 3.7 – 4.3 mm (0.146 – 0.169 in.).

Injection volume: 6 cc (0.37 cu in.)

HINT: The end point for 1HD-T engine is hard to identify, so use the methods used in (k) or (l) above.

(m) Check the timer piston fluctuation when the adjusting lever is moved from the maximum speed side to the idle speed side.

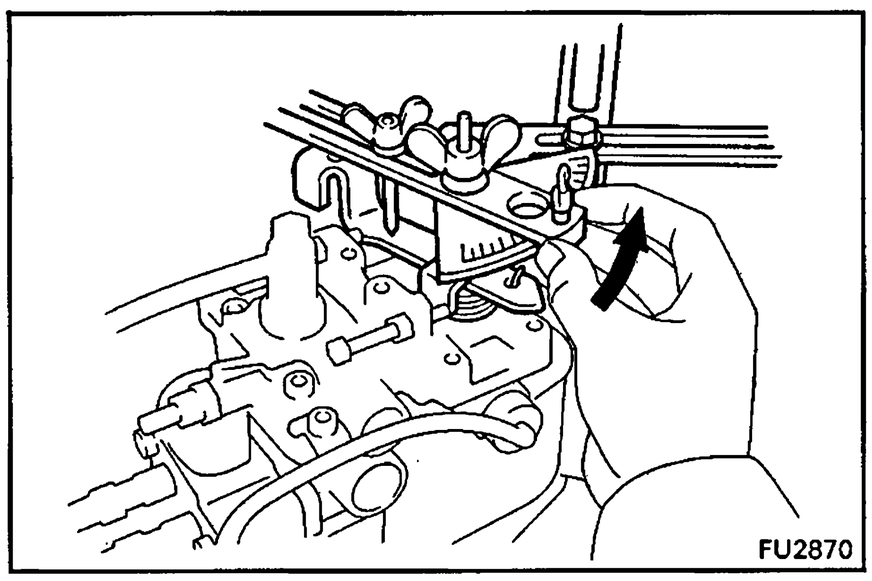

Item	Pump rpm	Timer piston fluctuation mm (in.)
1PZ	1,600	2.19 – 3.19 (0.0862 – 0.1256)
1HZ	1,600	2.73 – 3.73 (0.1075 – 0.1469)
1HD-T (Europe)	1,440	0.70 – 1.70 (0.0276 – 0,0669)
1HD-T (Others)	1,440	1.96 – 2.96 (0.0772 – 0.1165)

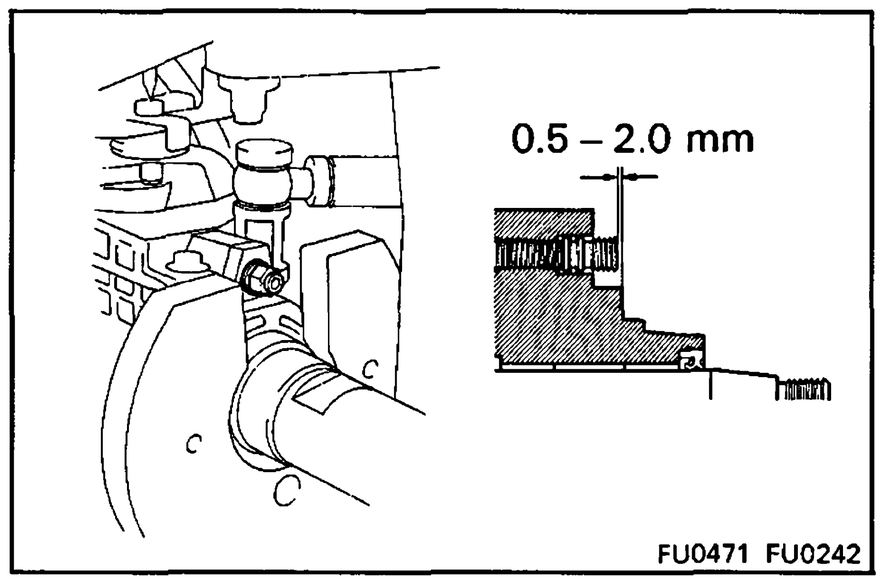

(n) Check the protrusion of the governor shaft.

Protrusion: 0.5 – 2.0 mm (0.020 – 0.079 in.)

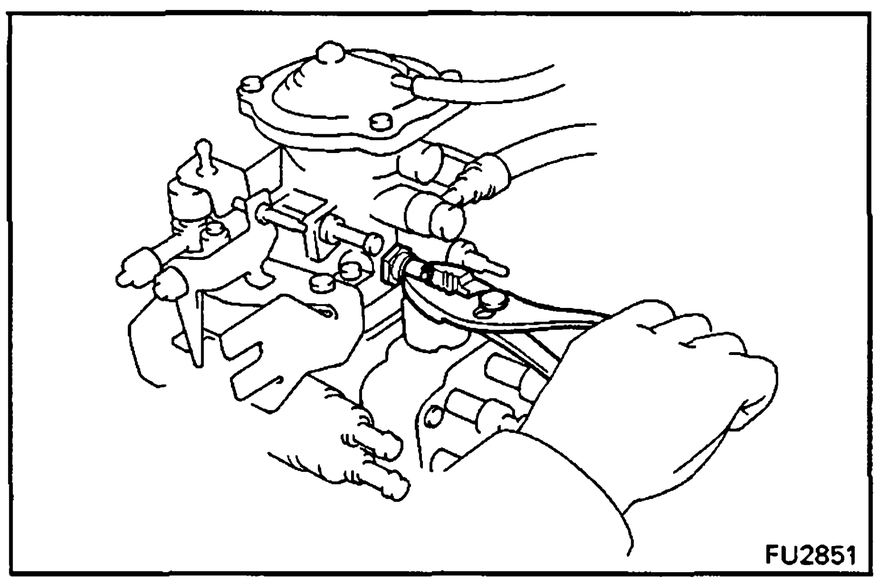

18. ADJUST IDLE SPEED

(a) (w/ Dash Pot)
Using pliers, remove the dash pot cover.

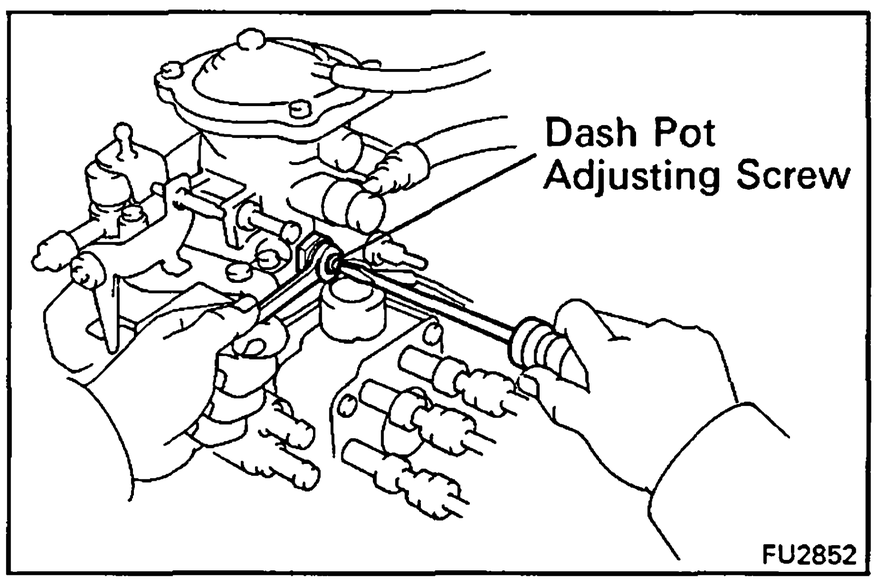

(b) (w/ Dash Pot)
Fully loosen the dash pot adjusting screw.

(c) Measure the injection volume for each pump rpm.

Item	Adjusting lever angle	Pump rpm	No. of measuring strokes	Injection volume cc (cu in.)	Variation limit cc (cu in.)	Remarks
1PZ	Minus 12 – 22°	325	200	q = 2.94 ~ 3.94 (0.18 ~ 0.24)	0.4 (0.02)	Adjust
		300		More than q Plus 0.5 (0.03)	–	–
		400		q Minus 1.2 ~ 2.2 (0.07 ~ 0.13)	–	
1HZ (M/T)	Minus 12 – 22°	375	200	q = 2.3 ~ 3.3 (0.14 ~ 0.20)	0.4 (0.02)	Pre-set
		350		More than q Plus 0.5 (0.03)	–	–
		450		q Minus 1.2 ~ 2.2 (0.07 ~ 0.13)	–	
		325		2.60 ~ 3.60 (0.16 ~ 0.22)	0.4 (0.02)	Adjust
1HZ (A/T)	Minus 12 – 22°	375	200	q = 2.3 ~ 3.3 (0.14 ~ 0.20)	0.4 (0.02)	Pre-set
		350		More than q Plus 0.5 (0.03)	–	–
		450		q Minus 1.2 ~ 2.2 (0.07 ~ 0.13)	–	
		375		1.64 ~ 2.64 (0.10 ~ 0.16)	0.4 (0.02)	Adjust

Cont'd

Item	Adjusting lever angle	Pump rpm	No. of measuring strokes	Injection volume cc (cu in.)	Variation limit cc (cu in.)	Remarks
1HD-T (Europe M/T)	Full position	400	200	9.32 ~ 11.72 (0.57 ~ 0.72)	–	–
	Minus 12 – 22°	325		q = 3.70 ~ 4.70 (0.23 ~ 0.29)	0.4 (0.02)	Adjust
		300		More than q Plus 0.5 (0.03)	–	–
1HD-T (Europe A/T)	Full position	400	200	10.30 ~ 12.70 (0.69 ~ 0.77)	–	–
	Minus 12 – 22°	325		q = 2.84 ~ 3.84 (0.17 ~ 0.23)	0.4 (0.02)	Adjust
		300		More than q Plus 0.5 (0.03)	–	–
1HD-T (Others M/T)	Full position	400	200	9.20 ~ 11.60 (0.56 ~ 0.71)	–	–
	Minus 12 – 22°	325		q = 3.70 ~ 4.70 (0.23 ~ 0.29)	0.4 (0.02)	Adjust
		300		More than q Plus 0.5 (0.03)	–	–
1HD-T (Others A/T)	Full position	400	200	10.18 ~ 12.58 (0.62 ~ 0.77)	–	–
	Minus 12 – 22°	325		q = 2.84 ~ 3.84 (0.17 ~ 0.23)	0.4 (0.02)	Adjust
		300		More than q Plus 0.5 (0.03)	–	–

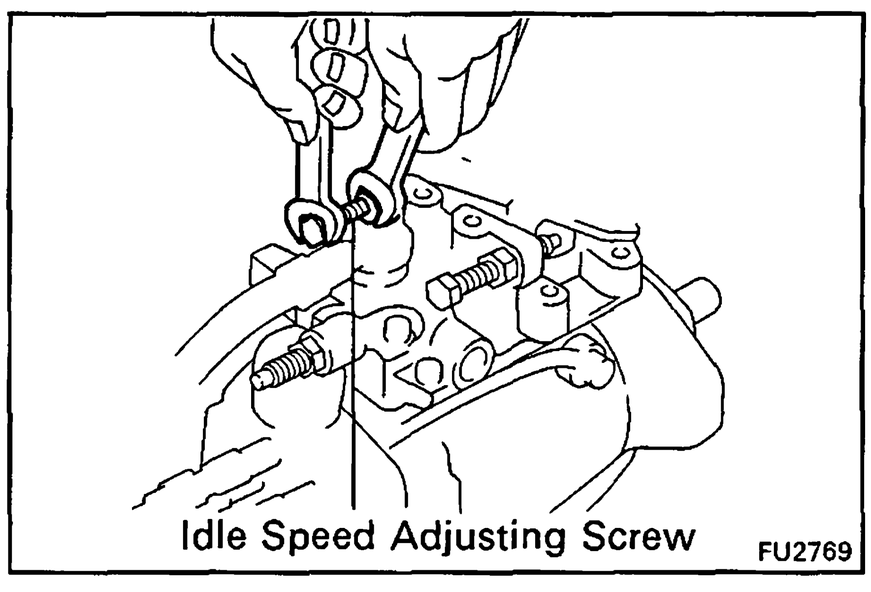

(d) Adjust by turning the idle speed adjusting screw.

(e) (w/ Dash Pot)
Set the adjusting lever to the angle for the injection volume shown below.

Item	Pump rpm	No. of measuring strokes	Injection volume cc (cu in.)
1HZ	700	200	q = 0.5 ~ 0.9 (0.03 ~ 0.05)
1HD-T	400	200	q = 0.1 ~ 0.3 (0.01 ~ 0.02)

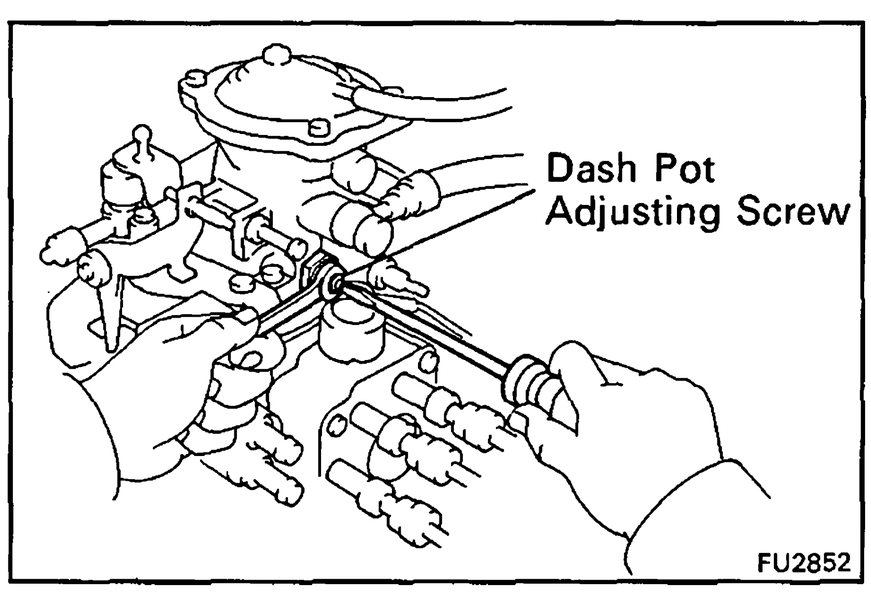

(f) (w/ Dash Pot)
Adjust the injection volume with the dash pot adjusting screw.

HINT: The stroke will decrease with turn to clockwise and increase with turn to counterclockwise.

Item	Pump rpm	No. of measuring strokes	Injection volume cc (cu in.)
1HZ	700	200	q Plus 0.2 ~ 0.3 (0.01 ~ 0.02)
1HD-T	400	200	q Plus 0.1 ~ 0.3 (0.01 ~ 0.02)

(g) (w/ Dash Pot)
Install the dash pot cover.

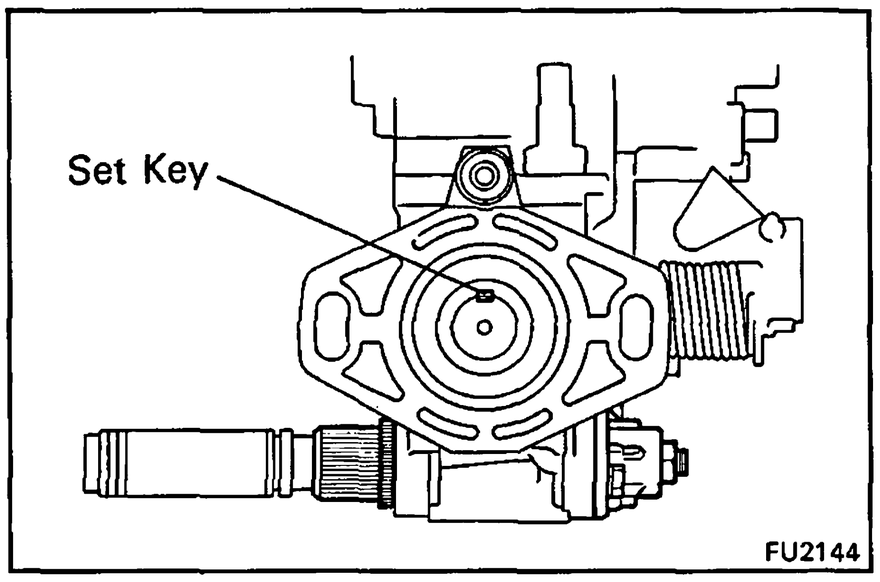

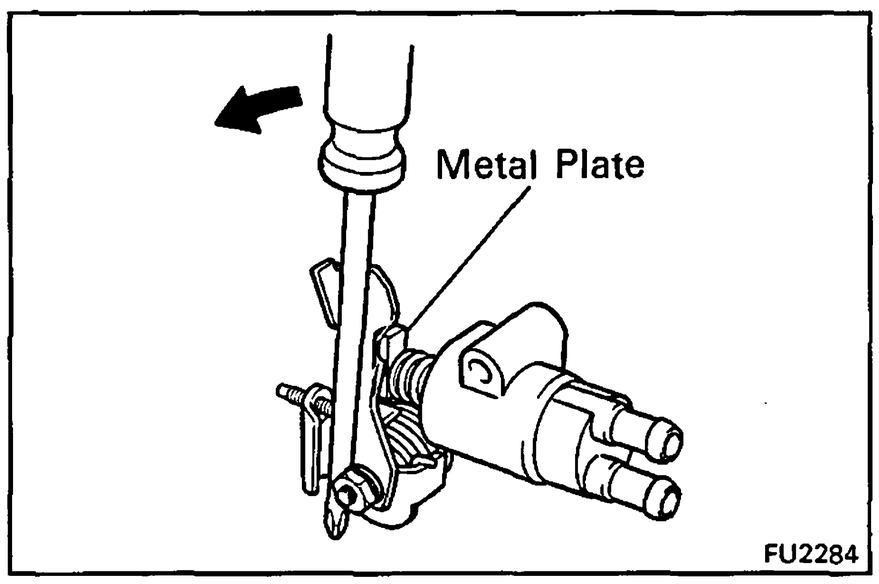

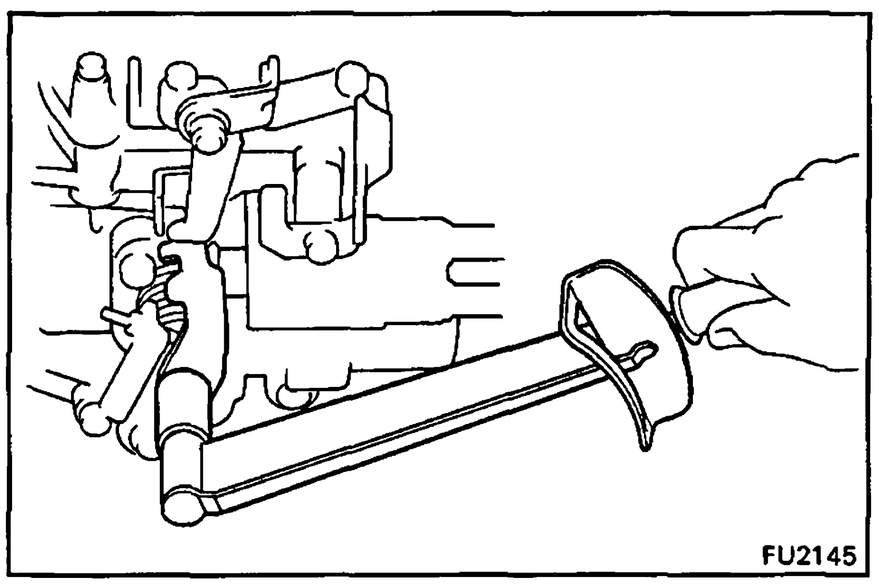

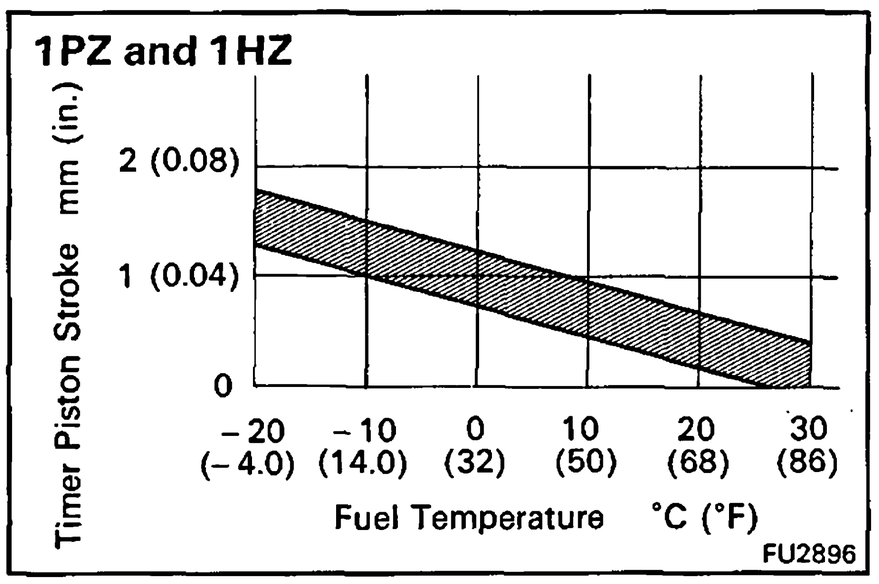

19. **(w/ ACSD)**
ADJUST COLD STARTING SYSTEM

(a) Remove the overflow screw and check the fuel temperature in the fuel pump.

Fuel temperature: 15 – 35°C (59 – 95 °F)

(b) Set the set key of the pump drive shaft in a vertical or horizontal position.

(c) Set the scale of the timer measuring device to zero.

(d) Check the adjusting lever opening angle and consider this angle as zero.

(e) Remove the metal plate between the cold starting lever and thermo wax plunger.

(f) Torque the cold starting lever clockwise to approx. 50 kg-cm (43 in.-lb, 4.9 N·m) and keep the lever tightened for about 10 seconds. Then release the torque.

(g) Measure the timer piston stroke.

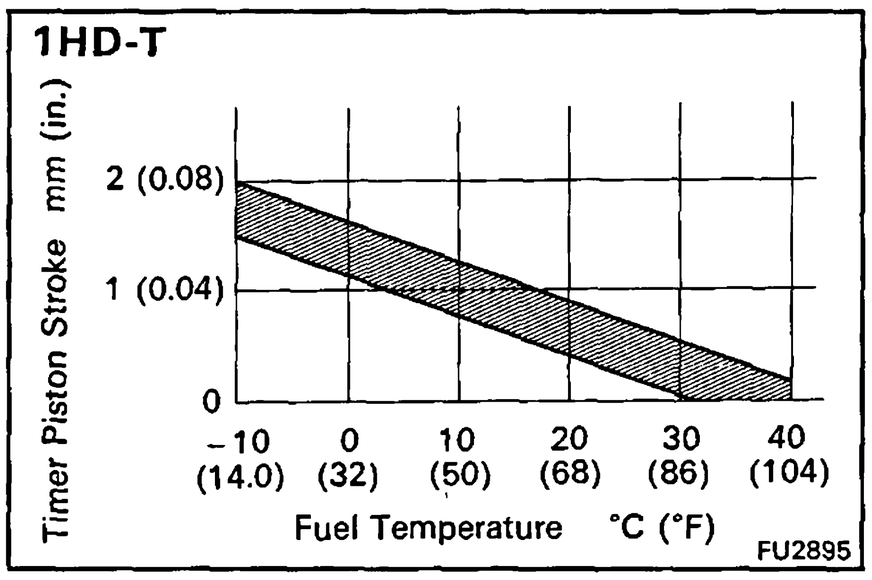

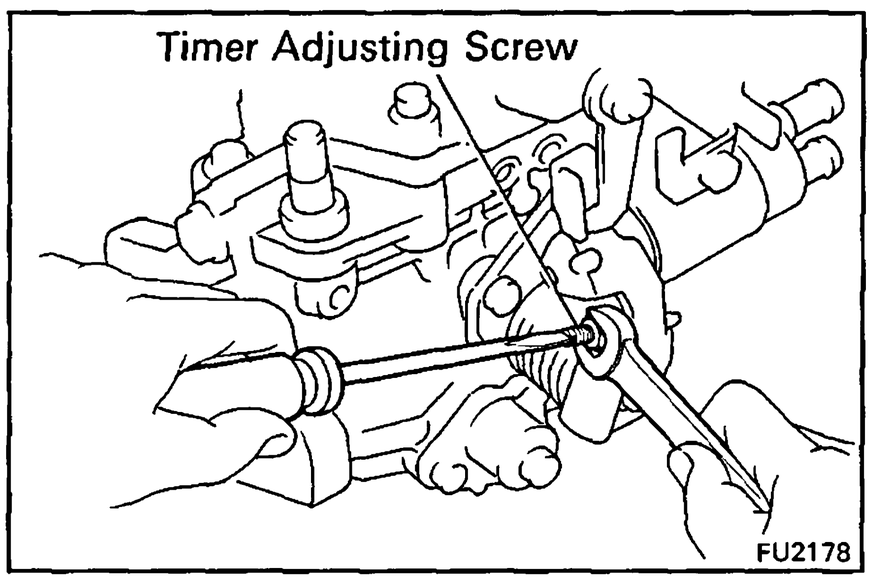

(h) Adjust by turning the timer adjusting screw.

HINT: Screw in for stroke decrease.

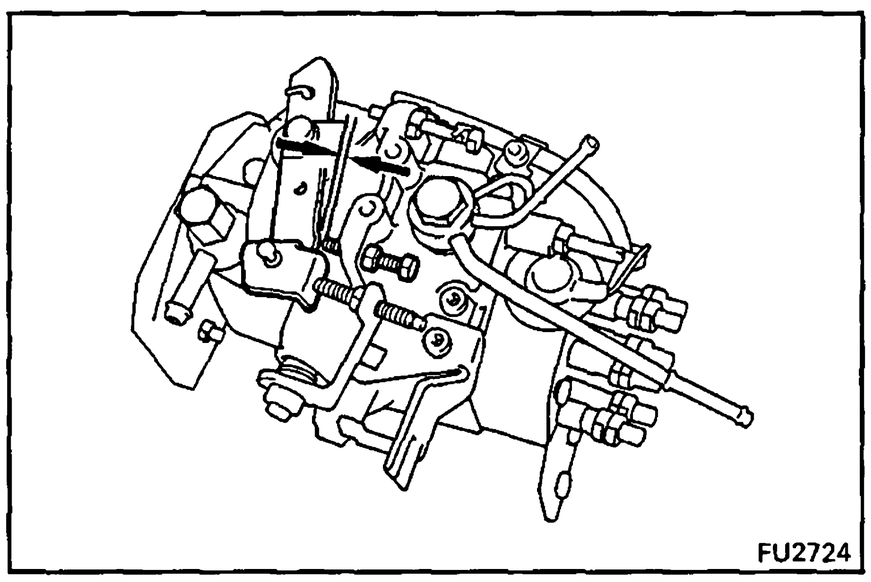

20. (w/ ACSD)
ADJUST FAST IDLE

(a) Measure the clearance between the adjusting lever and idle speed adjusting screw.

Item	Fuel temperature	Clearance
1PZ and 1HZ	15°C (59°F)	1.3 mm (0.051 in.)
	30°C (86°F)	0 mm (0 in.)
1HD-T	15°C (59°F)	1.6 mm (0.063 in.)
	40°C (104°F)	0 mm (0 in.)

(b) Adjust by turning the fast idle adjusting screw.

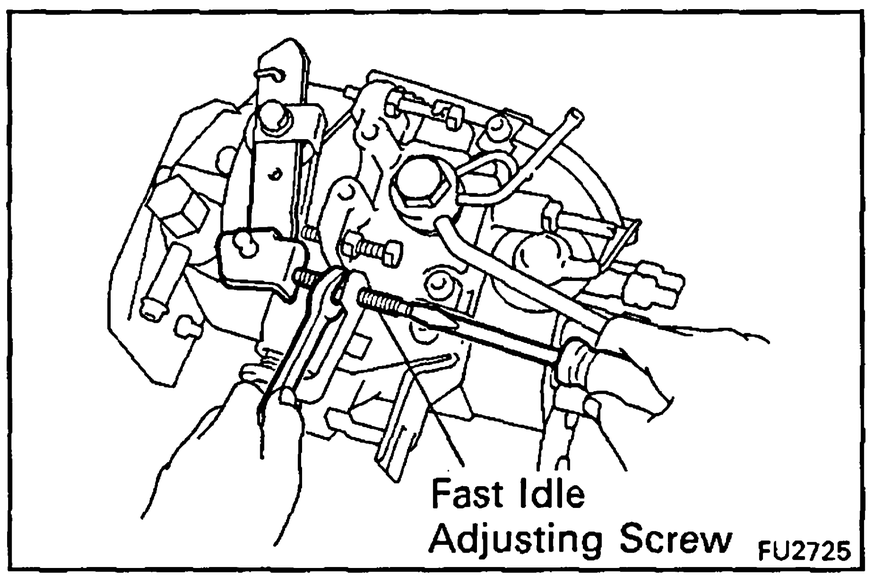

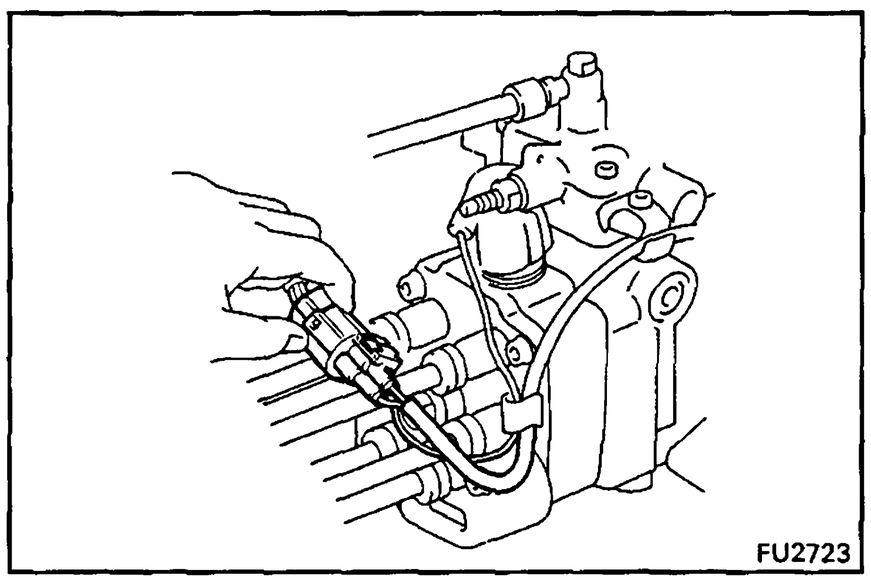

21. POST ADJUSTMENT CHECK

(a) Check that injection stops when the fuel cut solenoid harness is removed.

Pump revolution: 100 rpm

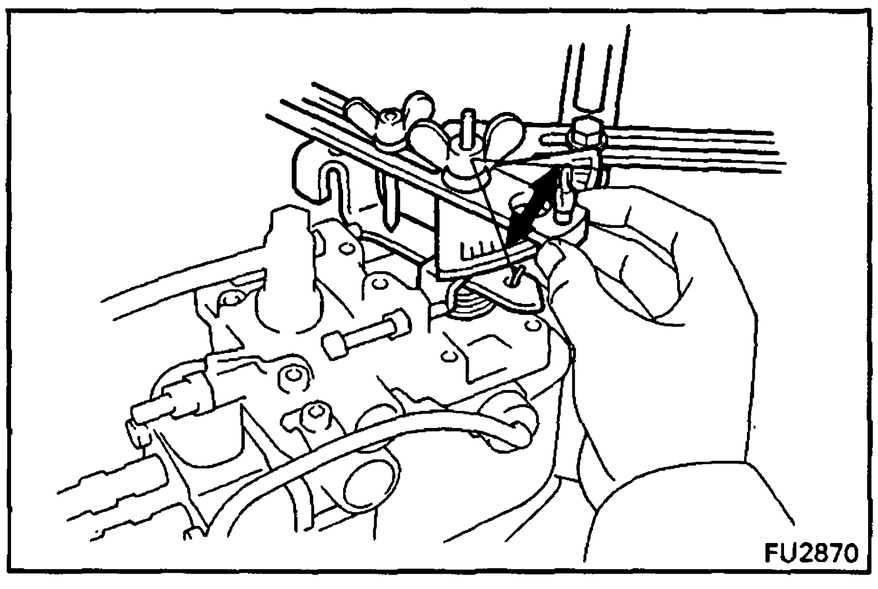

(b) Check the adjusting lever movement.

Adjusting lever angle: 38 – 48°

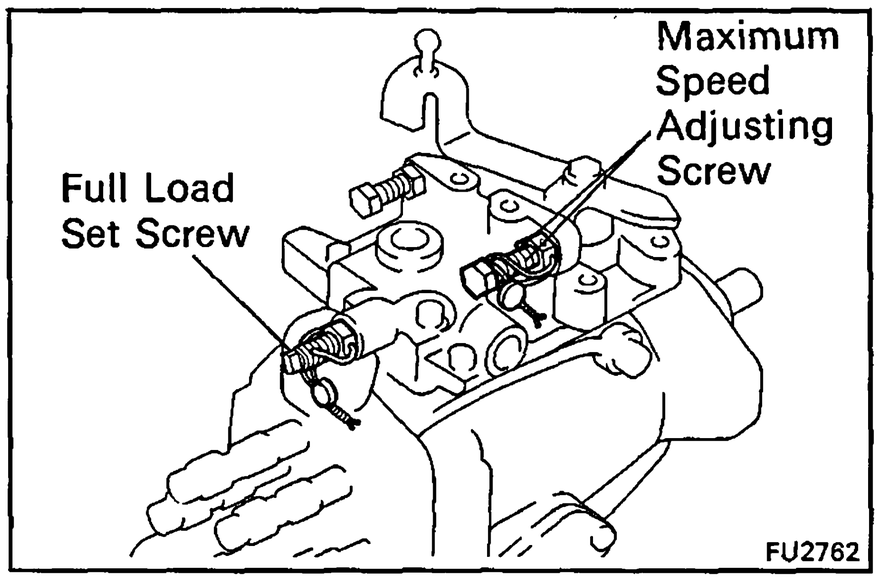

22. SEAL PARTS

Seal the maximum speed adjusting screw and full load set screws with new lead seals.

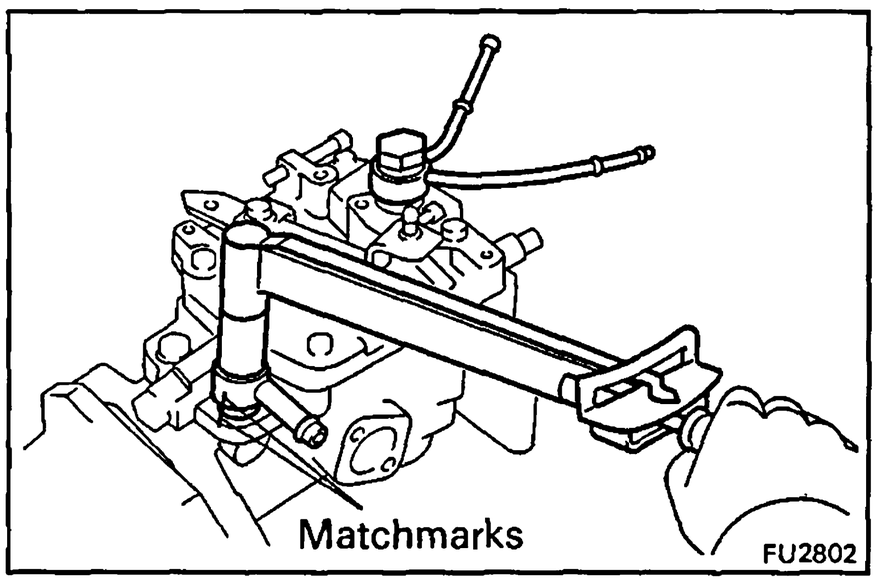

23. INSTALL TWO FUEL PIPES

Torque:

Inlet	**250 kg-cm (18 ft-lb, 25 N·m)**
Outlet	**225 kg-cm (16 ft-lb, 22 N·m)**

24. INSTALL INJECTION PUMP STAY

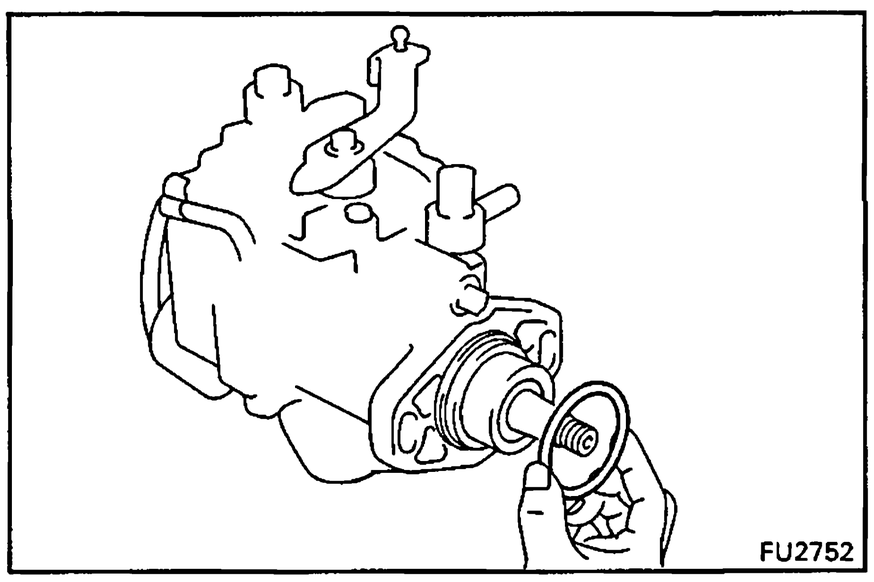

INSTALLATION OF INJECTION PUMP

(See page FU-27)

1. INSTALL INJECTION PUMP

NOTICE: Do not put the injection pump (with HAC, or for the 1HD-T) at an angle more than 45° from the horizontal.

(a) (1PZ and 1HZ (M/T for Europe))
Place the cylinder block insulator in position.

(b) Install a new O-ring to the pump.

(c) Apply a light coat of engine oil on the O-ring.

(d) Align the set key on the drive shaft and groove of the injection pump drive gear.

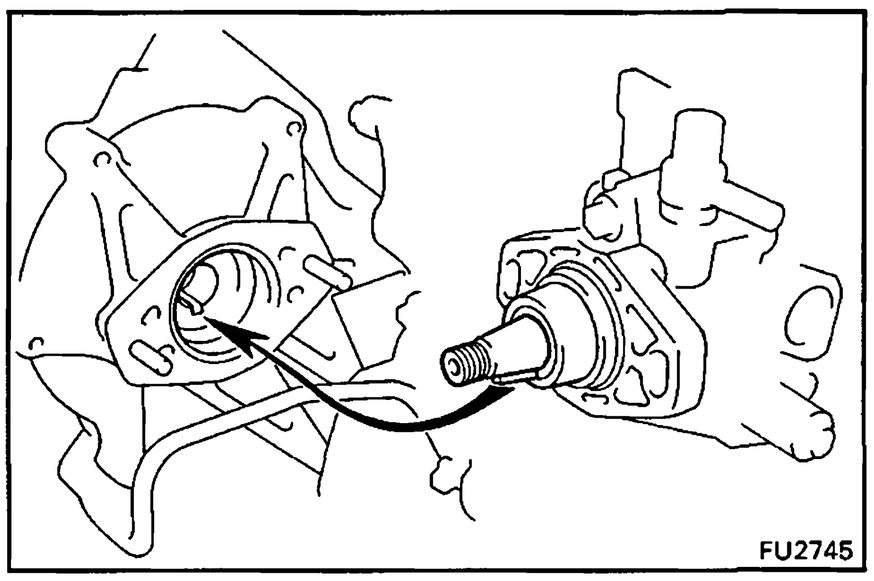

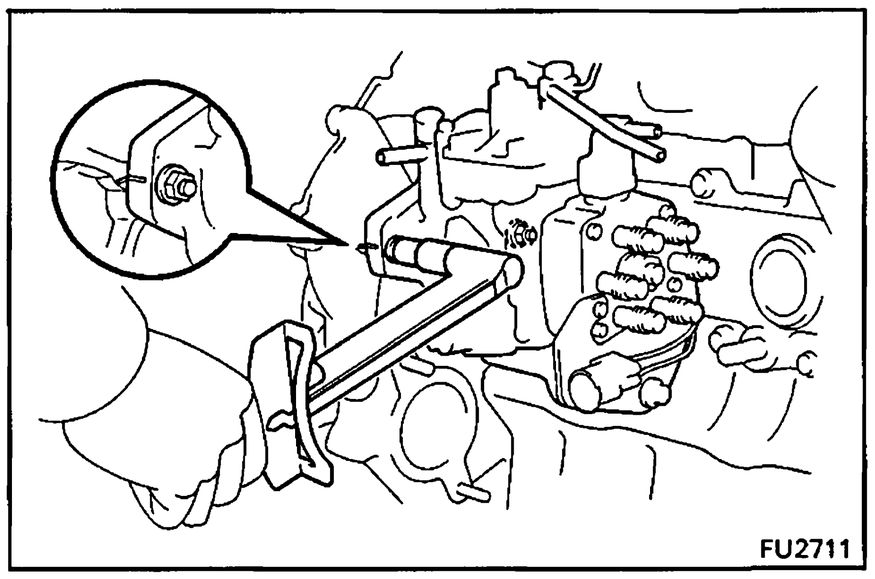

(e) Align the period lines (or matchmarks) of the injection pump and timing belt case.

(f) Install the two nuts holding the injection pump to the timing gear case.

Torque: 185 kg-cm (13 ft-lb, 18 N·m)

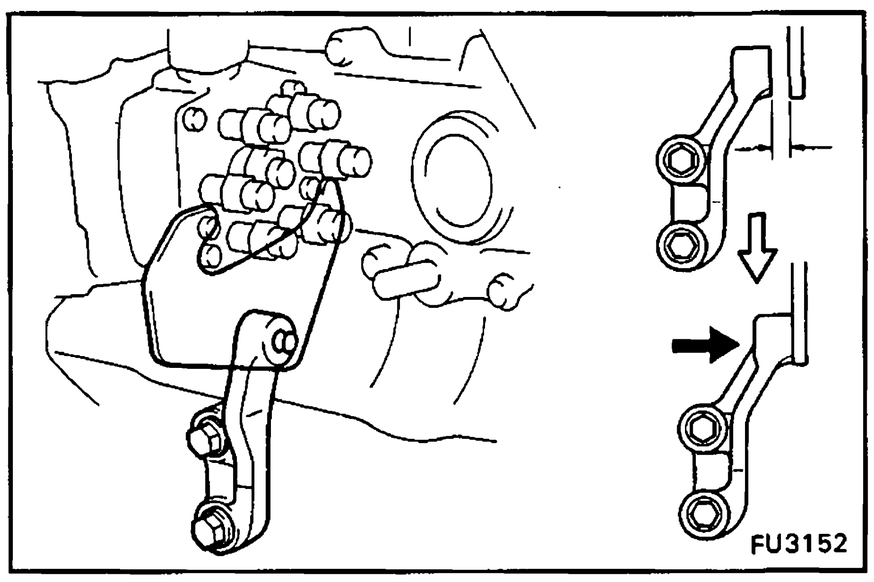

(g) Install the pump stay mount bolt.

Torque: 700 kg-cm (51 ft-lb, 69 N·m)

NOTICE: Before tightening to the standard torque, check whether the pumpstay is up against the pump braket.

If there is a gap, loosen the bolts joining the pump stay to the cylinder block and set the pump stay against the pump bracket.

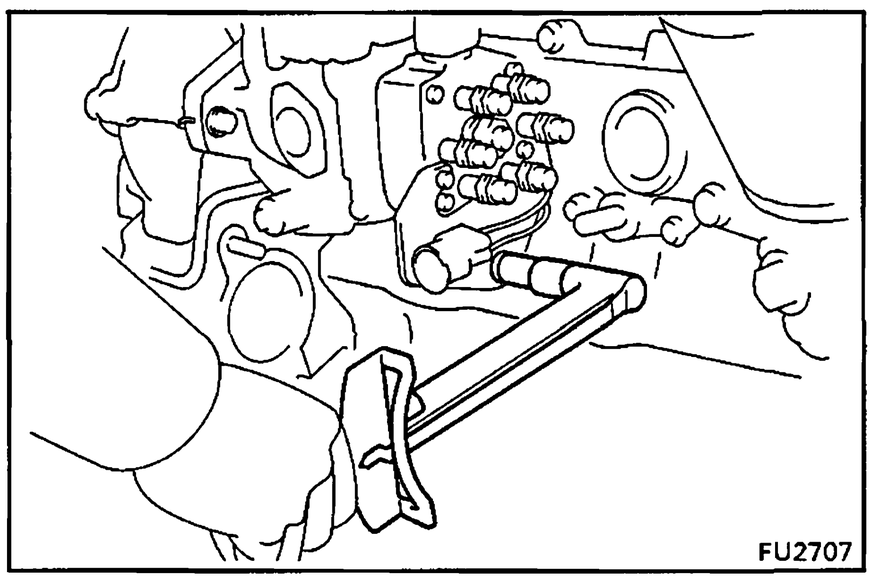

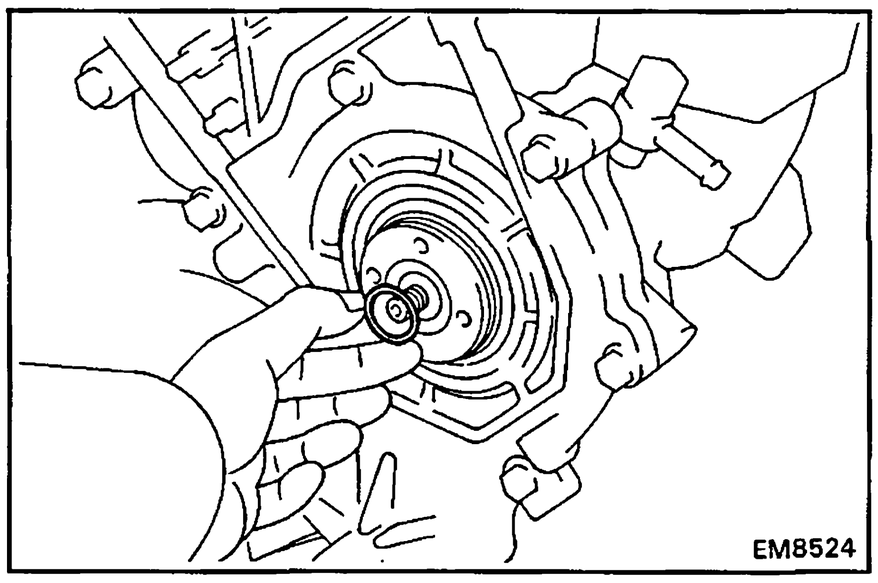

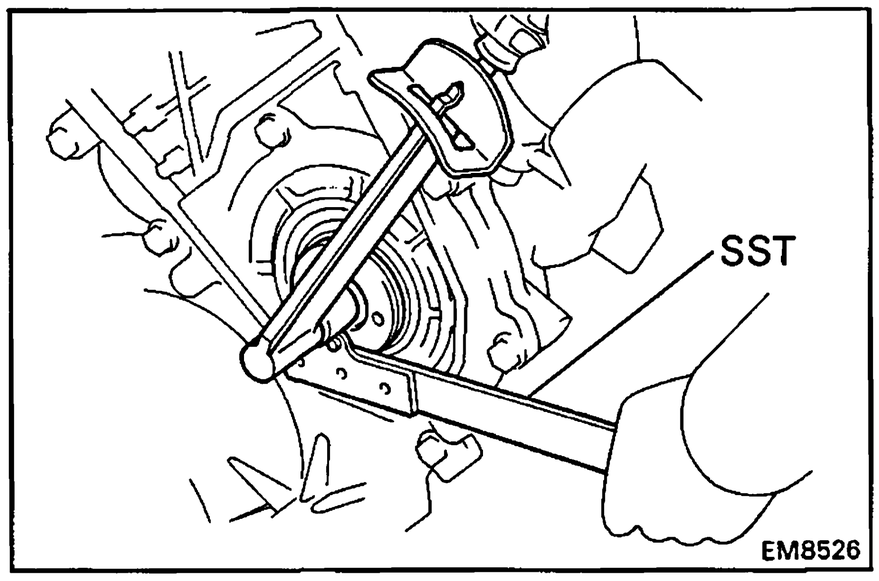

(h) Install a new O-ring to the injection pump drive gear.

(i) Install the injection pump drive gear set nut.

(j) Using SST, torque the nut.

SST 09330-00021

Torque: 1,000 kg-cm (72 ft-lb, 98 N·m)

2. **CHECK INJECTION TIMING (See page EM-24)**

3. **INSTALL INJECTION PIPES (See step 3 on page FU-15)**

   Torque:

1PZ and 1HZ	**150 kg-cm (11 ft-lb, 15 N·m)**
1HD-T	**250 kg-cm (18 ft-lb, 25 N·m)**

4. **(w/ BACS) CONNECT BACS VACUUM HOSE**

5. **(w/ PCS) CONNECT PCS VACUUM HOSE**

6. **(1HD-T) CONNECT BOOST COMPENSATOR HOSE**

7. **CONNECT FUEL HOSES TO INJECTION PUMP**

8. **CONNECT INJECTION PUMP CONNECTOR**

9. **(w/ ACSD) CONNECT WATER BY-PASS HOSES TO THERMO WAX**

10. **(w/ A/C) CONNECT A/C IDLE-UP VACUUM HOSE**

11. **(A/T) CONNECT THROTTLE CABLE**

12. **CONNECT ACCELERATOR CONNECTING ROD**

13. **INSTALL NO.2 CAMSHAFT TIMING PULLEY (See step 4 on page EM-39)**

14. **INSTALL TIMING BELT (See steps 6 to 9 on pages EM-39 to 41)**

15. **FILL WITH ENGINE COOLANT (See page CO-5)**

16. **START ENGINE AND CHECK FOR FUEL LEAKS**

17. **CHECK IDLE SPEED AND MAXIMUM SPEED (See page EM-27)**

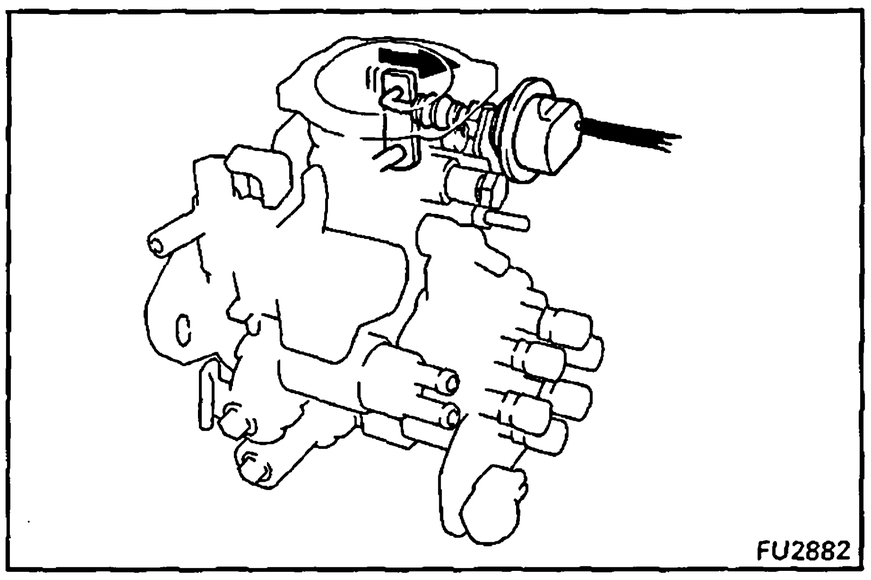

POWER CONTROL SYSTEM (PCS) (HDB30 (w/ M/T) only)

ON-VEHICLE INSPECTION

INSPECT POWER CONTROL SYSTEM (PCS)

(a) Start the engine.

(b) Depress the clutch pedal and check the operation of the actuator at each shift position.

Standard:

Shifting to 1st or Reverse ..... Actuator not operating

Sifting to other positions ..... Actuator operates

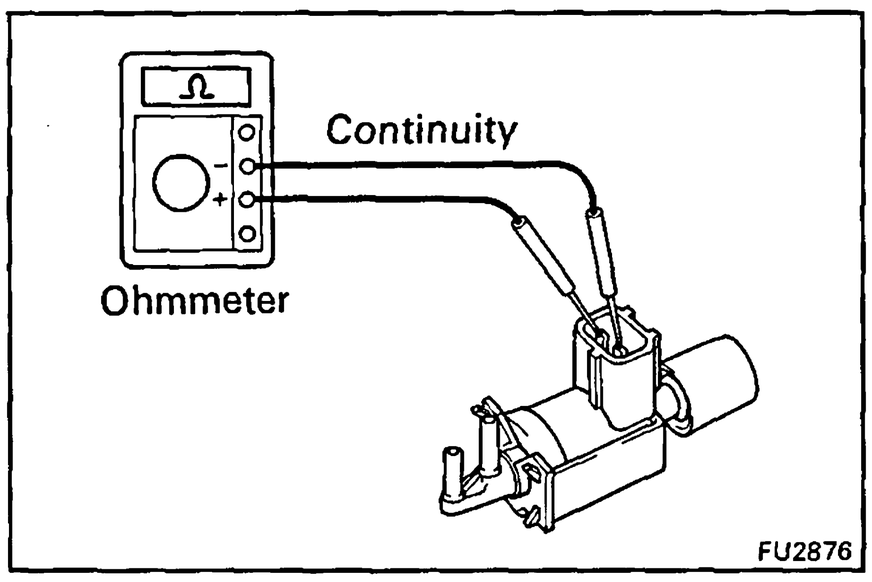

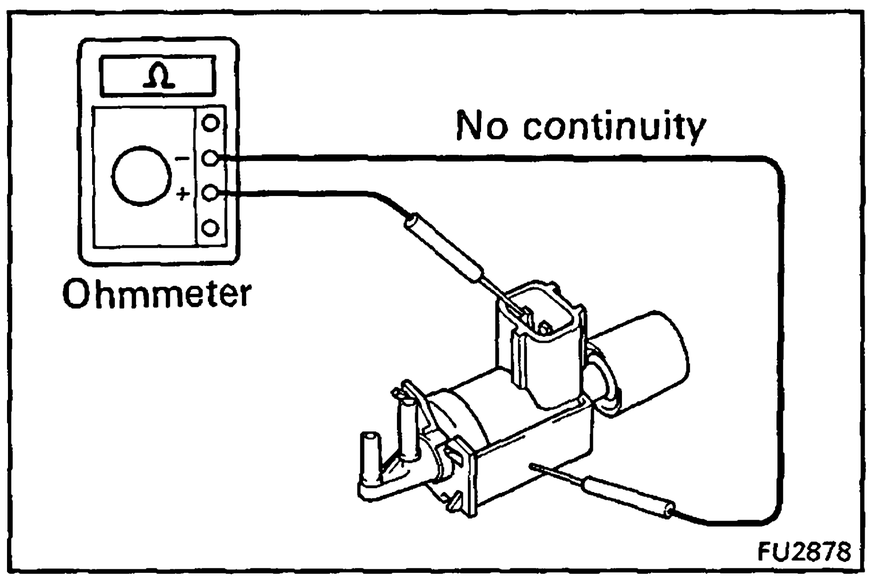

INSPECTION OF POWER CONTROL SYSTEM (PCS) COMPONENTS

1. **INSPECT PCS VSV**

A. **Inspect VSV for open circuit**

Using an ohmmeter, check that there is continuity between the terminals.

Resistance (Cold): 33 – 39 Ω

If there is no continuity, replace the VSV.

B. **Inspect VSV for ground**

Using an ohmmeter, check that there is no continuity between each terminal and the body.

If there is continuity, replace the VSV.

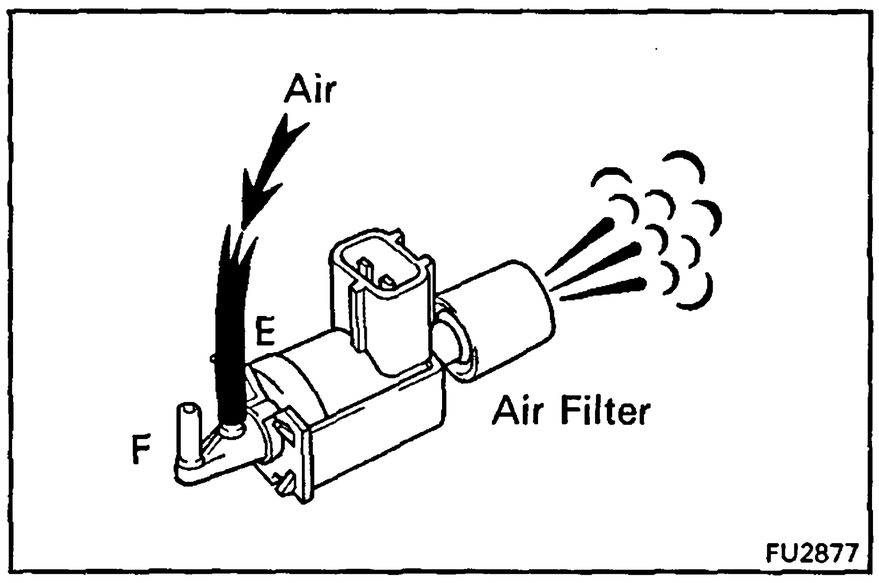

C. Inspect VSV operation

(a) Check that air flows from pipes E to the filter.

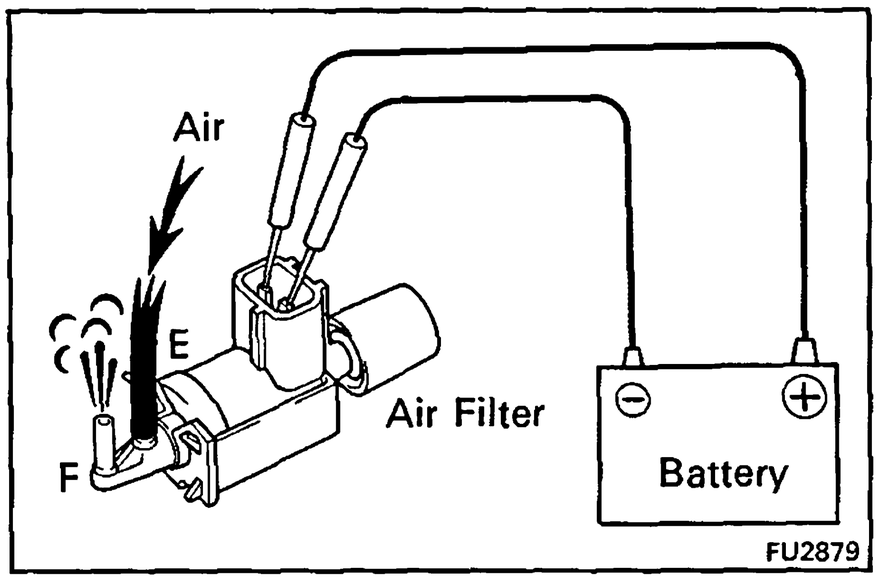

(b) Apply battery voltage across the terminals.

(c) Check that air flows from pipe E to F.

If operation is not as specified, replace the VSV.

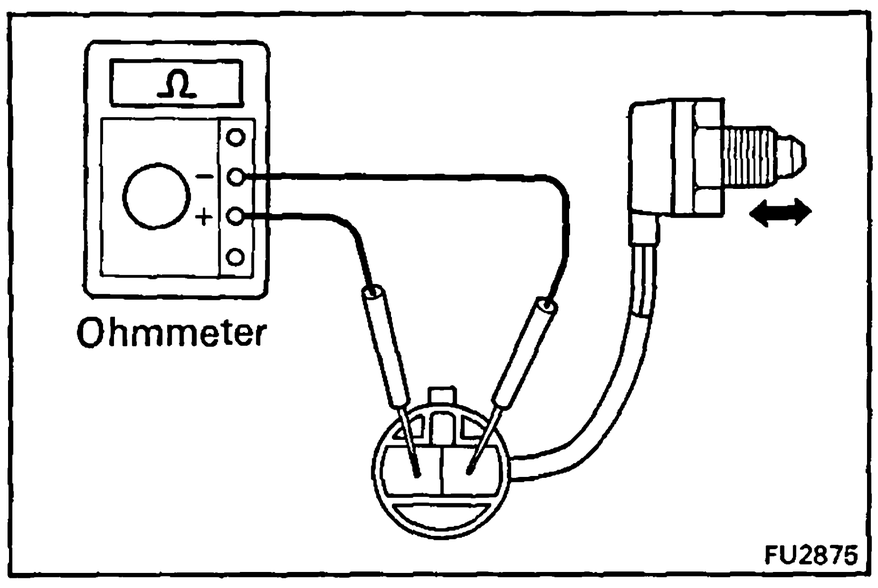

2. INSPECT SHIFT POSITION SWITCH

(a) Check that there is no continuity between terminals when the switch is pushed (shift position 1st or reverse).

(b) Check that there is continuity between terminals when switch is free (shift position others).

If continuity is not as specified, replace the switch.

COOLING SYSTEM

	Page
DESCRIPTION	CO-2
TROUBLESHOOTING	CO-4
CHECK AND REPLACEMENT OF ENGINE COOLANT	CO-4
WATER PUMP	CO-6
THERMOSTAT	CO-10
RADIATOR	CO-12

DESCRIPTION

This engine utilizes a pressurized water forced circulation cooling system which includes a thermostat equipped with a by-pass valve mounted on the inlet side.

1PZ and 1HZ

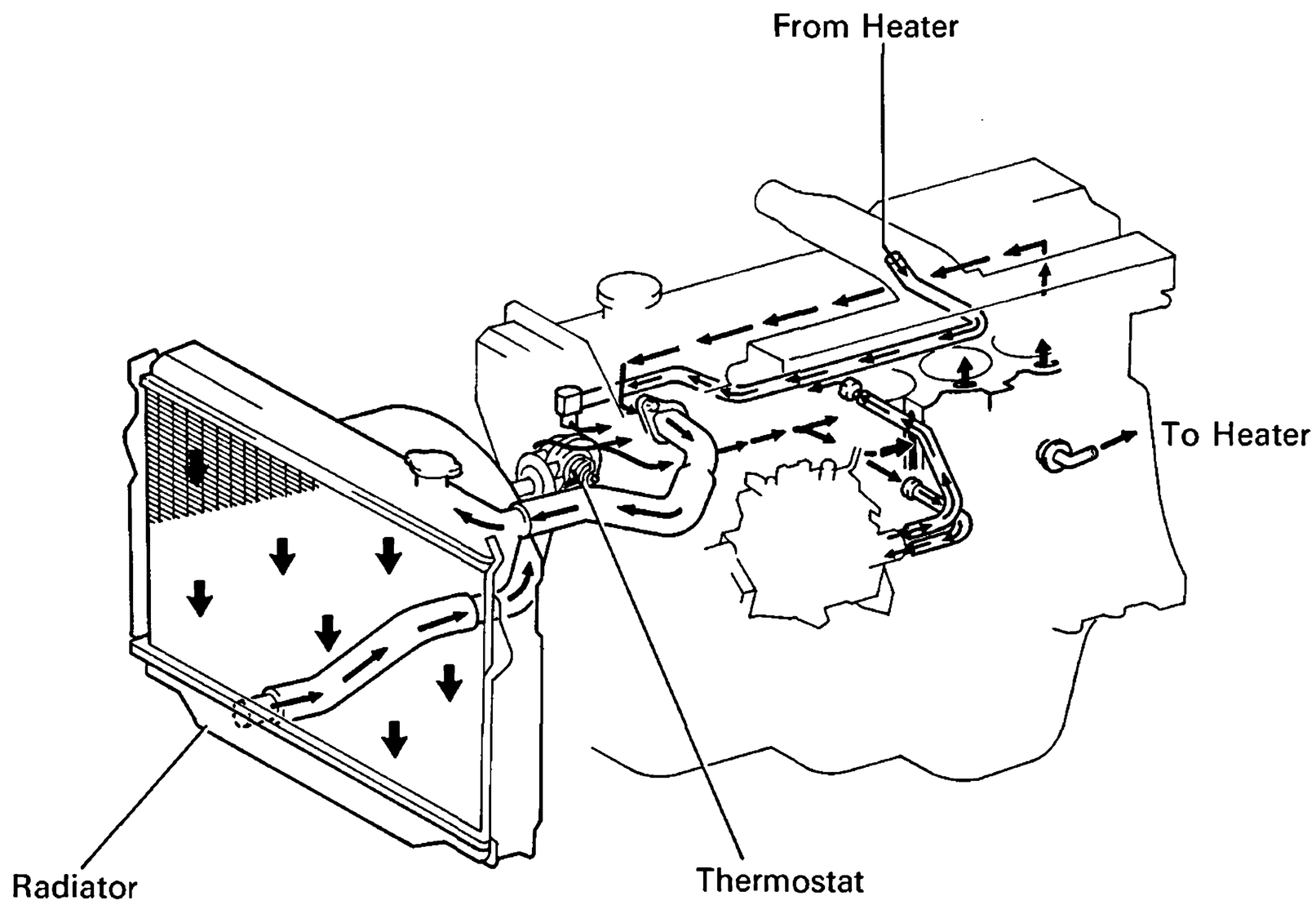

1HD-T

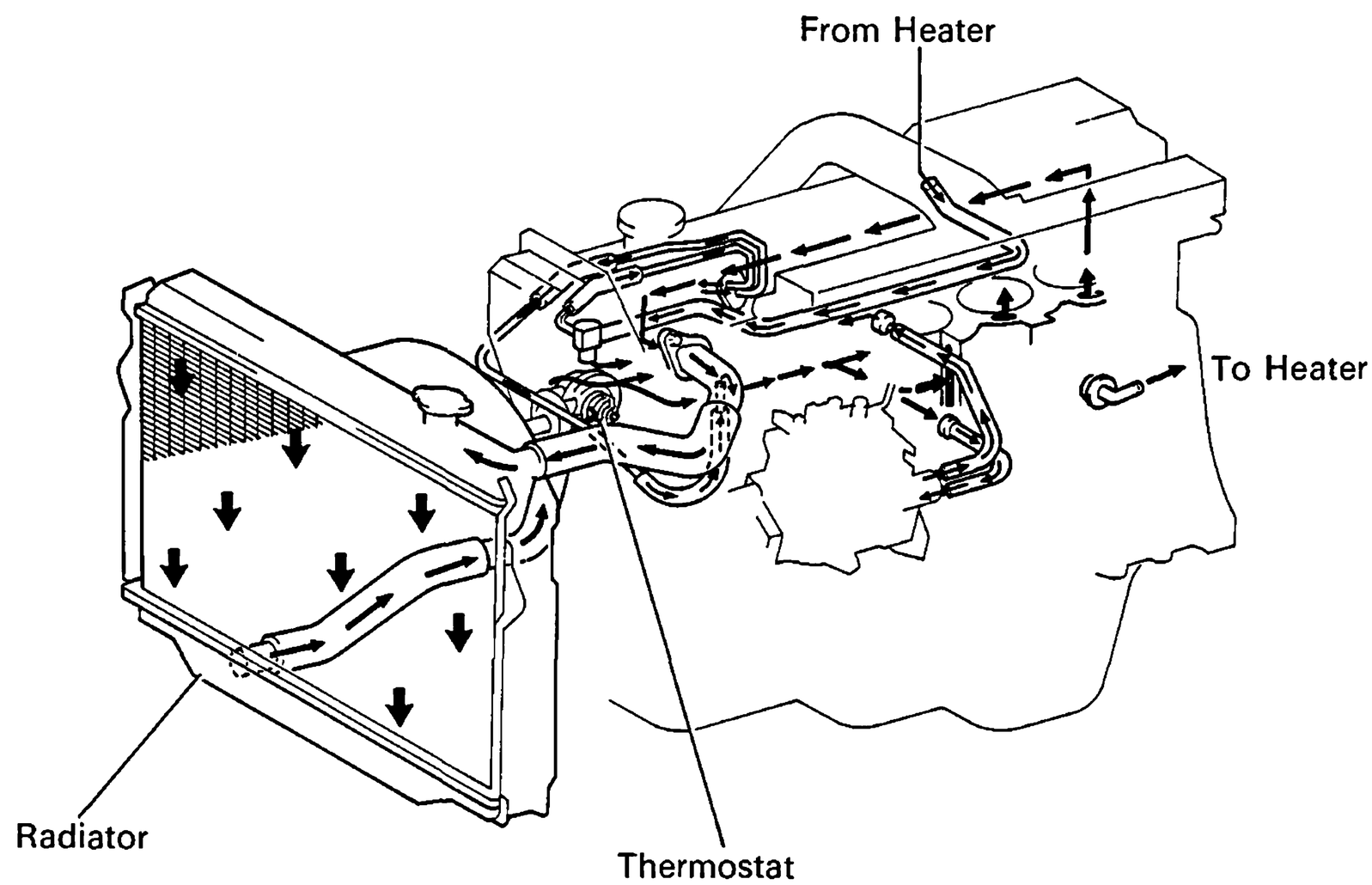

CO1049
CO1050

The cooling system is composed of the water jacket (inside the cylinder block and cylinder head), radiator, water pump, thermostat, cooling fan, hoses and other components. Coolant which is heated in the water jacket is pumped to the radiator, where it is cooled by the cooling fan and the vehicle windstream. Coolant which has been cooled is then sent back to the engine by the water pump, where it cools the engine. The water jacket is a network of channels in the shell of the cylinder block and cylinder head through which coolant passes. It is designed to provide adequate cooling of the cylinders and combustion chambers which become the hottest during engine operation.

RADIATOR

The radiator performs the function of cooling the coolant which has passed through the water jacket and become hot, and it is mounted in the front of the vehicle. The radiator consists of an upper tank and lower tank, and a core which connects the two tanks. The upper tank contains an inlet for coolant from the water jacket and a filler inlet. It also has a hose through which excess coolant or steam can flow. The lower tank has an outlet and drain cock for the coolant. The core contains many tubes and cooling fins through which coolant flows from the upper tank to the lower tank so that coolant has been heated up as it passes through the water jacket is cooled heae by the air sucked through the radiator by the cooling fan, as well as by the wind generated by the vehicle's travel. Models with an automatic transmission include an automatic transmissions fluid cooler built into the lower tank of the radiator.

RADIATOR CAP

The radiator cap is a pressure type cap which seals the radiator, resulting in pressurization of the radiator as the coolant expands. The pressurization prevents the coolant from boiling even when the coolant temperature exceeds 100°C (212°F). A relief valve (pressurization valve) and a vacuum valve (negative pressure valve) are built into the radiator cap. When the pressure generated inside the cooling system exceeds the limit (coolant temperature: 110 – 120°C, 230 – 248°F, pressure; 0.3 – 1.0 kg/cm^2, 4.3 – 14.2 psi, 29.4 – 98.1 kPa) the relief valve is opened by the pressure and lets steam escape through the overflow pipe. The vacuum valve opens to allow atmospheric air to enter to alleviated the vacumm which develops in the cooling system after the engine is stopped and the coolant temperature drops. The valve's opening allows the pressure in the cooling system to return to the reservoir tank.

RESERVOIR TANK

The reservoir tank is used to catch coolant which overflows the cooling system as a result of volumetric expansion when the coolant is heated. When the coolant temperature drops the coolant in the reservoir tank returns to the radiator, thus keeping the radiator full at all times and avoiding needless coolant loss. To find out if the coolant needs to be replenished, check the reservoir tank level.

WATER PUMP

The water pump is used for forced circulation of coolant through the cooling system. It is mounted on the front of the cylinder block and driven by a drive belt.

THERMOSTAT

The thermostat has a wax type by-pass valve and is mounted in the cylinder block. The thermostat includes a type of automatic valve operated by fluctuations in the coolant temperature. This valve closes when the coolant temperature drops, preventing the circulation of coolant through the radiator and thus permitting the engine to warm up rapidly. The valve opens when the coolant temperature has risen, allowing the circulation of coolant. Wax inside the thermostat expands when heated and contracts when cooled. Heating the wax thus generates pressure which overpowers the force of the spring which keeps the valve closed, thus opening the valve. When the wax cools, its contraction causes the force of the spring to take effect once more, closing the valve. The thermostat in this engine operates at a temperature of 76°C (169°F).

TROUBLESHOOTING

Problem	Possible cause	Remedy	Page
Engine overheats	Fan belt loose or missing	Adjust or replace belts	CH-5
	Dirt, leaves or insects on radiator or condenser	Clean radiator or condenser	CO-12
	Hoses, water pump, thermostat housing, radiator, heater, core plugs or head gasket leakage	Repair as necessary	
	Thermostat faulty	Check thermostat	CO-10
	Injection timing retarded	Adjust timing	EM-24
	Fluid coupling faulty	Replace fluid coupling	CO-7
	Radiator hose plugged or rotted	Replace hose	
	Water pump faulty	Replace water pump	CO-7
	Radiator plugged or cap faulty	Check radiator	CO-12
	Cylinder head or block cracked or plugged	Repair as necessary	

HINT: Removal of the thermostat would have an adverse effect, causing a lowering of cooling efficiency. Do not remove the thermostat, even if the engine tends to overheat.

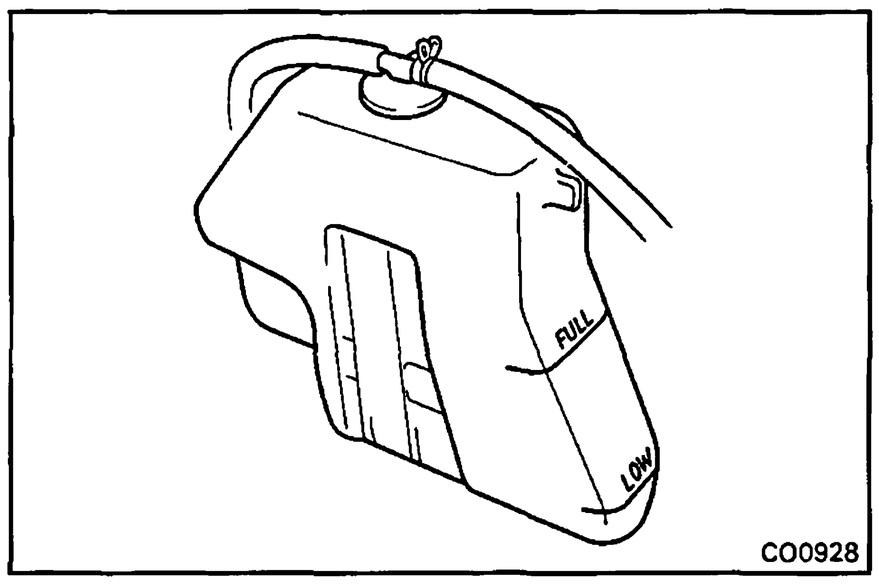

CHECK AND REPLACEMENT OF ENGINE COOLANT

1. CHECK ENGINE COOLANT LEVEL AT RESERVOIR TANK

The coolant level should be between the "LOW" and "FULL" lines.

If low, check for leaks and add coolant up to the "FULL" line.

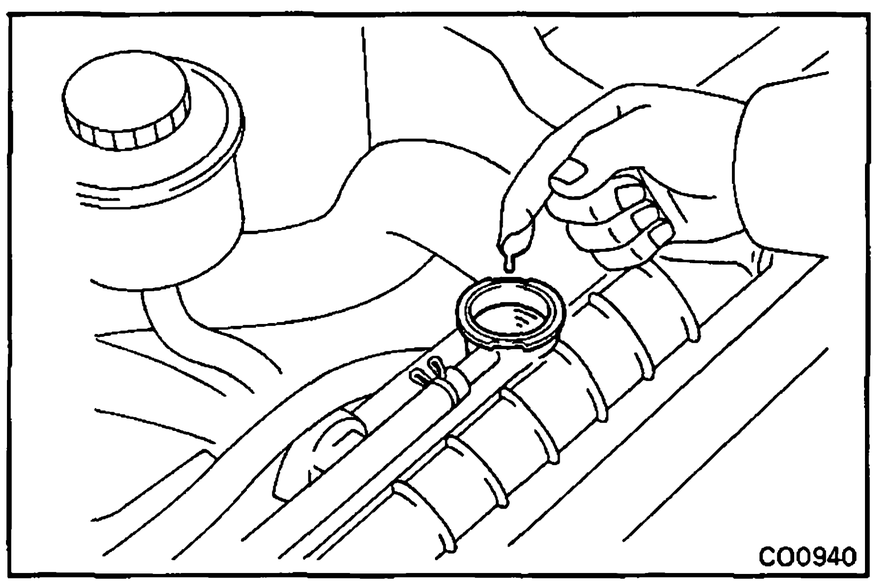

2. CHECK ENGINE COOLANT QUALITY

There should not be any excessive deposits of rust or scales around the radiator cap or radiator filler hole, and the coolant should be free from oil.

If excessively dirty, replace the coolant.

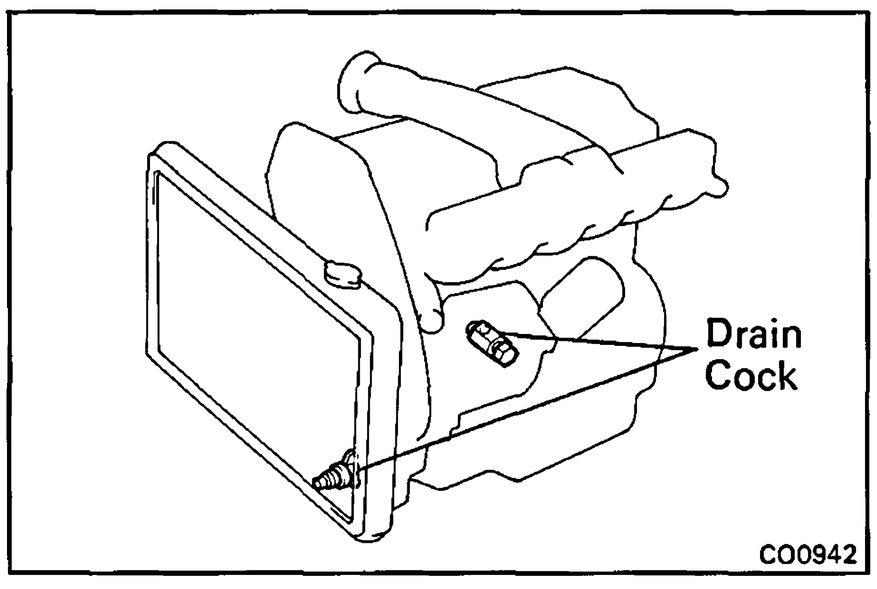

3. REPLACE ENGINE COOLANT

(a) Remove the radiator cap.

CAUTION: To avoid the danger of being burned, do not remove it while the engine and radiator are still hot, as fluid and steam can be blown out under pressure.

(b) Drain the coolant from the radiator and engine drain cocks.

(c) Close the drain cocks.

Torque (Engine drain cock):
250 kg-cm (18 ft-lb, 25 N-m)

(d) Fill the system with coolant.
Use a good brand of ethylene-glycol or TOYOTA radiator conditioner or equivalent anticorrosive, mixed according to the manufacturer's directions.

Ethylene-glycol type: This type has an antifreeze and anticorrosive effect.
TOYOTA radiator conditioner: This has only an anticorrosive effect.

NOTICE:
- **Do not use alcohol type coolant.**
- **The coolant should be mixed with demineralized water or distilled water.**

Capacity (w/o Heater):
PZJ70, 73, 75
9.6 liters (10.1 US qts, 8.4 Imp. qts)
HZJ70, 73, 75
M/T 9.9 liters (10.5 US qts, 8.7 Imp. qts)
A/T 9.7 liters (10.3 US qts, 8.5 Imp. qts)
HZJ80 and HDJ80
M/T 10.4 liters (11.0 US qts, 9.2 Imp. qts)
A/T 10.2 liters (10.8 US qts, 9.0 Imp. qts)
HZB30 and HDB30
10.2 liters (10.8 US qts, 9.0 Imp. qts)
Capacity (w/ Heater):
PZJ70, 73, 75
10.3 liters (10.9 US qts, 9.1 Imp. qts)
HZJ70, 73, 75
M/T 10.6 liters (11.2 US qts, 9.3 Imp. qts)
A/T 10.4 liters (11.0 US qts, 9.2 Imp. qts)
HZJ80 and HDJ80
M/T 11.1 liters (11.6 US qts, 9.8 Imp. qts)
A/T 10.9 liters (11.5 US qts, 9.6 Imp. qts)
HZB30 and HDB30
14.6 liters (15.4 US qts, 12.8 Imp. qts)
Capacity (w/ Front and rear heaters):
PZJ70, 73 75
11.3 liters (11.9 US qts, 9.9 Imp. qts)
HZJ70, 73, 75
11.6 liters (12.2 US qts, 10.2 Imp. qts)
HZJ80 and HDJ80
M/T (Europe)
12.0 liters (12.7 US qts, 10.6 Imp. qts)
A/T (Europe)
11.8 liters (12.5 US qts, 10.4 Imp. qts)
M/T (Others)
11.9 liters (12.6 US qts, 10.5 Imp. qts)
A/T (Others)
11.7 liters (12.4 US qts, 10.3 Imp. qts)

(e) Reinstall the radiator cap.

(f) Warm up the engine and check for leaks.

(g) Recheck the coolant level and refill as necessary.

WATER PUMP

COMPONENTS

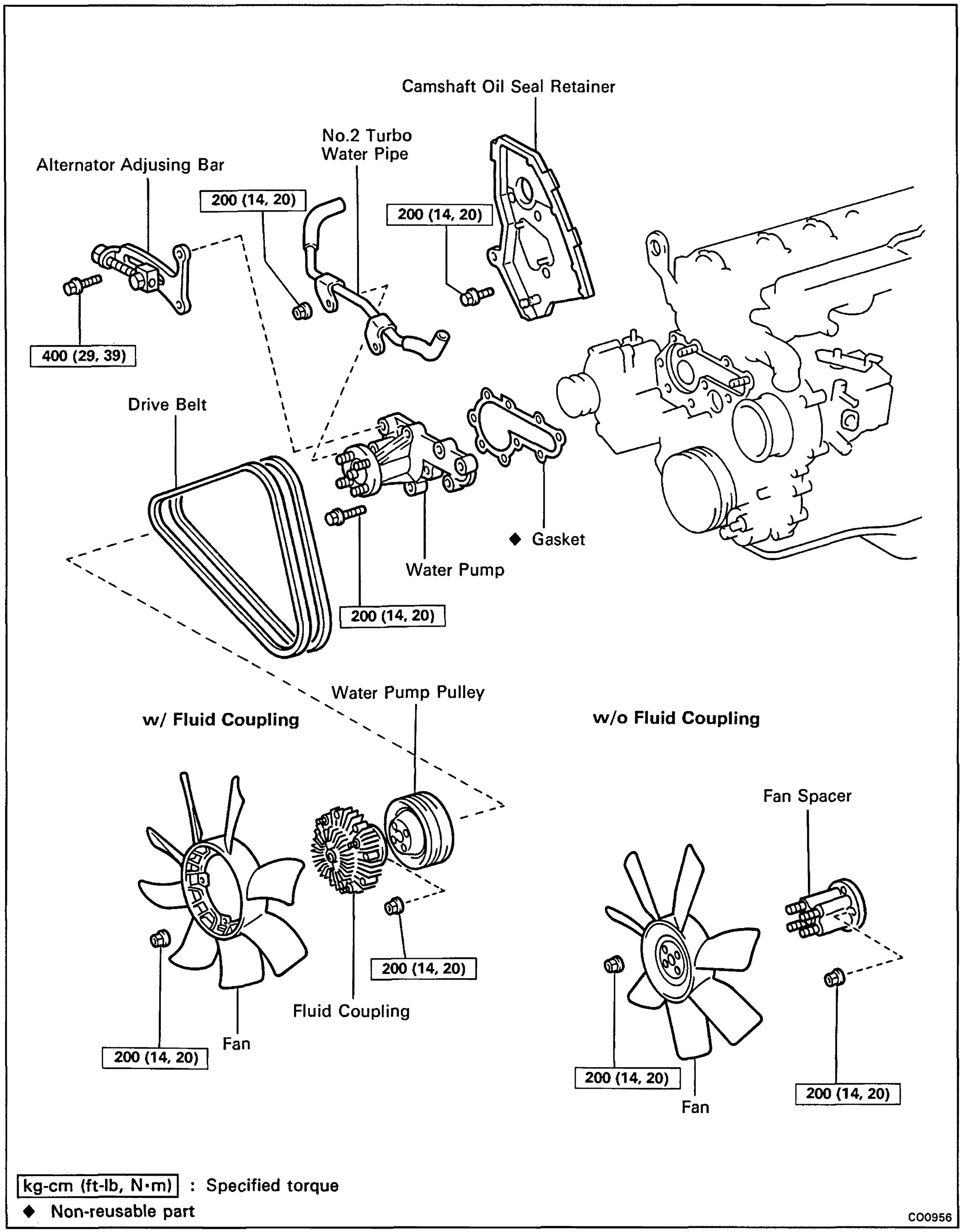

kg-cm (ft-lb, N·m) : Specified torque

◆ Non-reusable part

CO0956

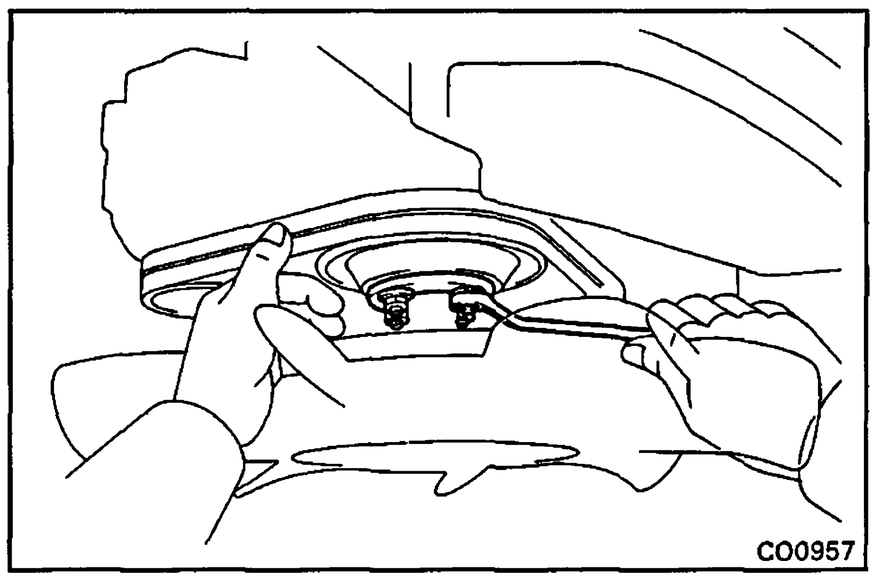

REMOVAL OF WATER PUMP

(See page CO-6)

1. **DRAIN ENGINE COOLANT (See page CO-5)**

2. **REMOVE DRIVE BELT, FAN AND WATER PUMP PULLEY**
   (a) Stretch the belt tight and loosen the four pump pulley set nuts.
   (b) Loosen the pivot bolt, lock bolt and adjusting bolt, and remove the drive belt.
   (c) Remove the four nuts, fan and fluid coupling (fan spacer) assembly and pulley.

3. **REMOVE TIMING BELT AND IDLER PULLEY (See steps 1 to 4 on pages EM-33 to 34)**

4. **REMOVE NO.1 CAMSHAFT TIMING PULLEY (See steps 6 to 8 on pages EM-34 to 35)**

5. **REMOVE CAMSHAFT OIL SEAL RETAINER (See step 14 on page EM-55)**

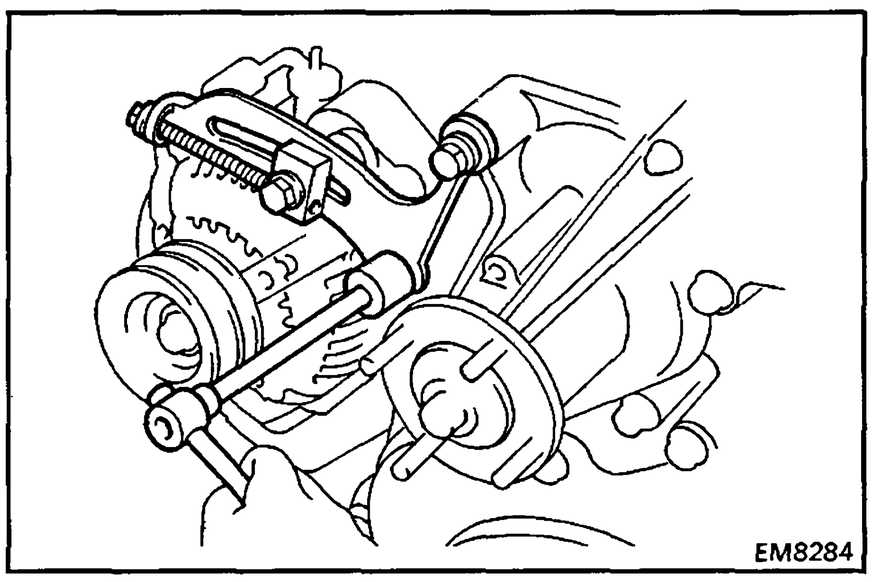

6. **REMOVE WATER PUMP**
   (a) (1HD-T)
   Disconnect the turbo water by-pass hoses.
   (b) Remove the three bolts and alternator adjusting bar.

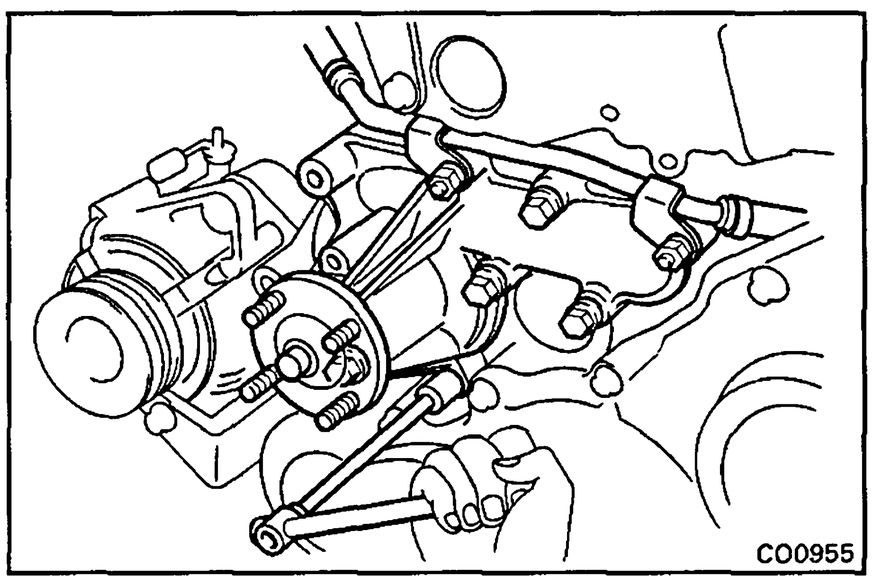

   (c) Remove the five bolts, two nuts, No.2 turbo water pipe (1HD-T), water pump and gasket.

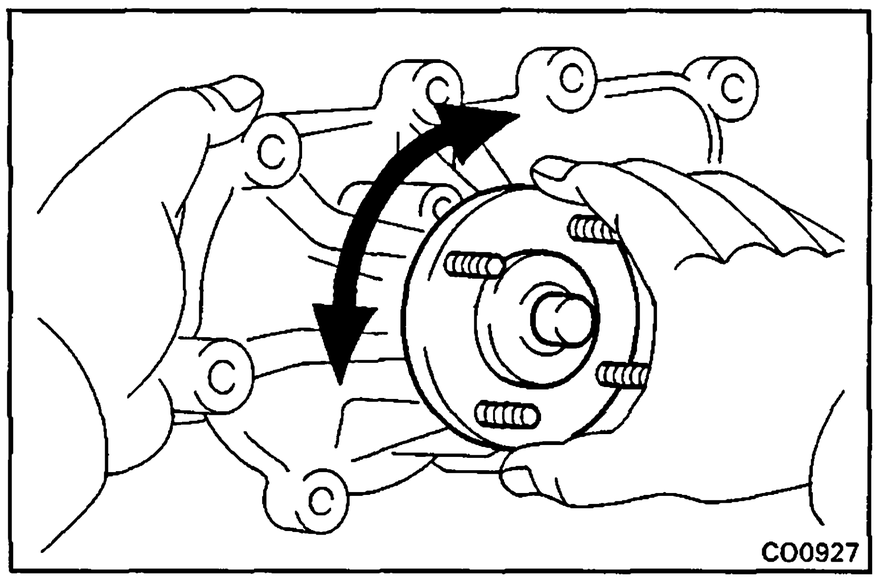

INSPECTION OF WATER PUMP

1. INSPECT WATER PUMP

Turn the pulley and check that the water pump bearing moves smoothly and quietly.

If necessary, replace the water pump.

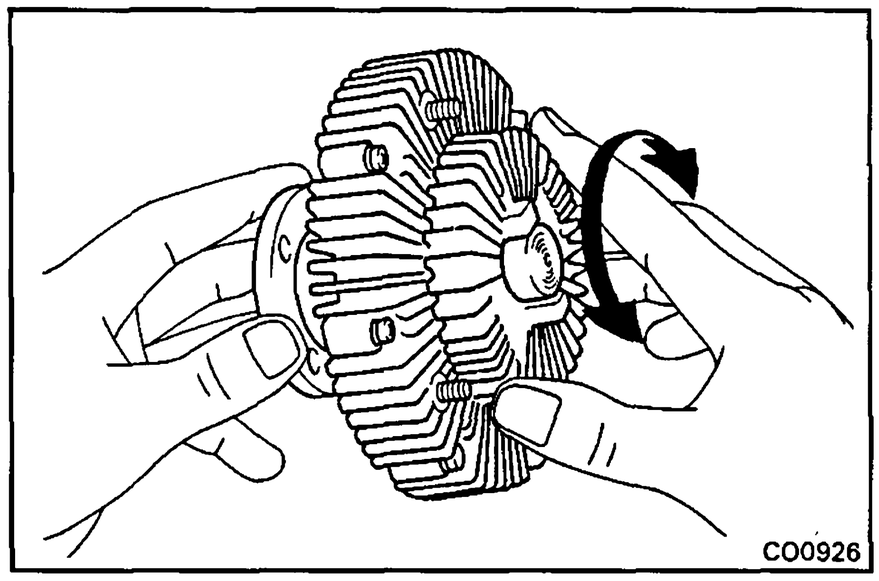

2. INSPECT FLUID COUPLING

Check the fluid coupling for damage and silicon oil leakage.

If necessary, replace the fluid coupling.

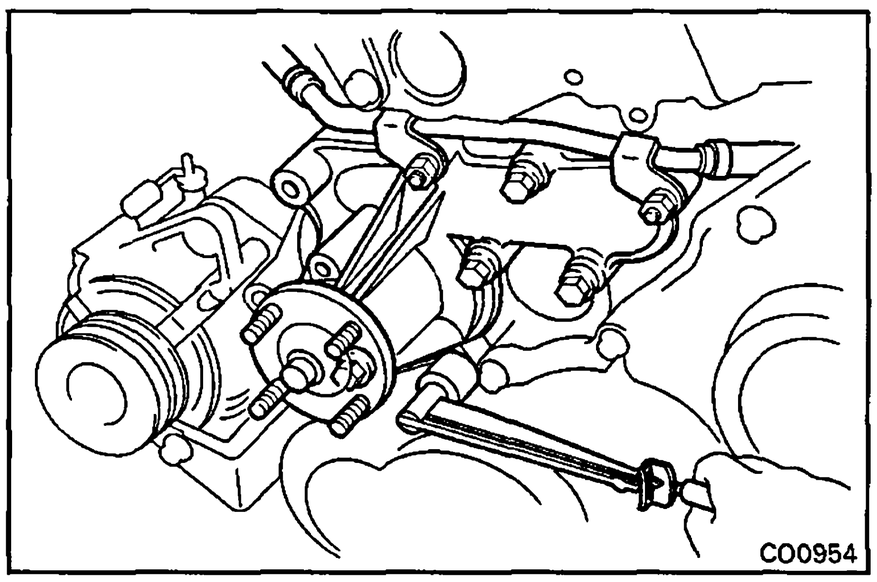

INSTALLATION OF WATER PUMP

(See page CO-6)

1. INSTALL WATER PUMP

(a) Install a new gasket, the water pump and No.2 turbo water pipe (1HD-T) with the five bolts and two nuts.

Torque: 200 kg-cm (14 ft-lb, 20 N-m)

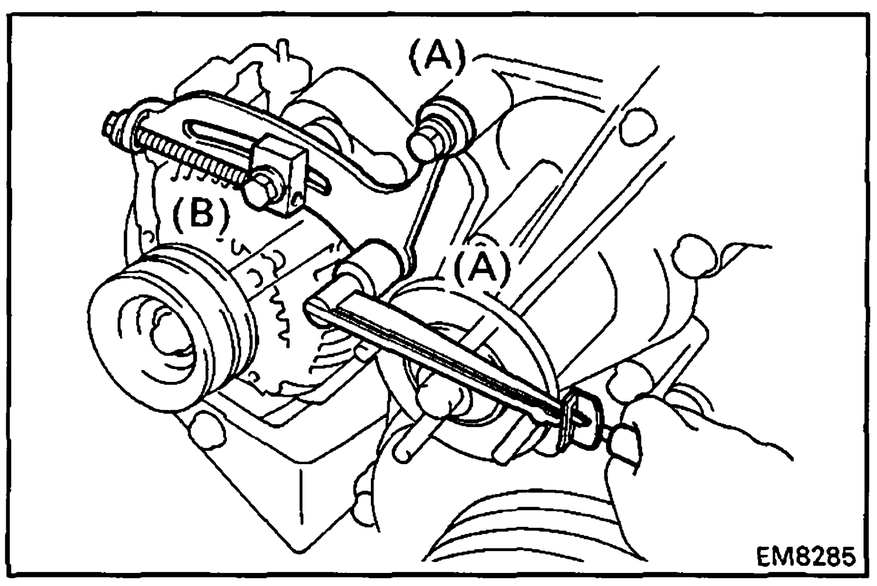

(b) Install the alternator adjusting bar with the two bolts (A).

Torque: 400 kg-cm (29 ft-lb, 39 N-m)

(c) Temporarily install the lock bolt (B).

(d) (1HD-T)
Connect the water by-pass hoses.

2. INSTALL CAMSHAFT OIL SEAL RETAINER

(See step 6 on page EM-79)

3. INSTALL NO.1 CAMSHAFT TIMING PULLEY

(See steps 1 to 3 on page EM-38)

4. INSTALL IDLER PULLEY TIMING BELT

(See steps 5 to 11 on pages EM-39 to 41)

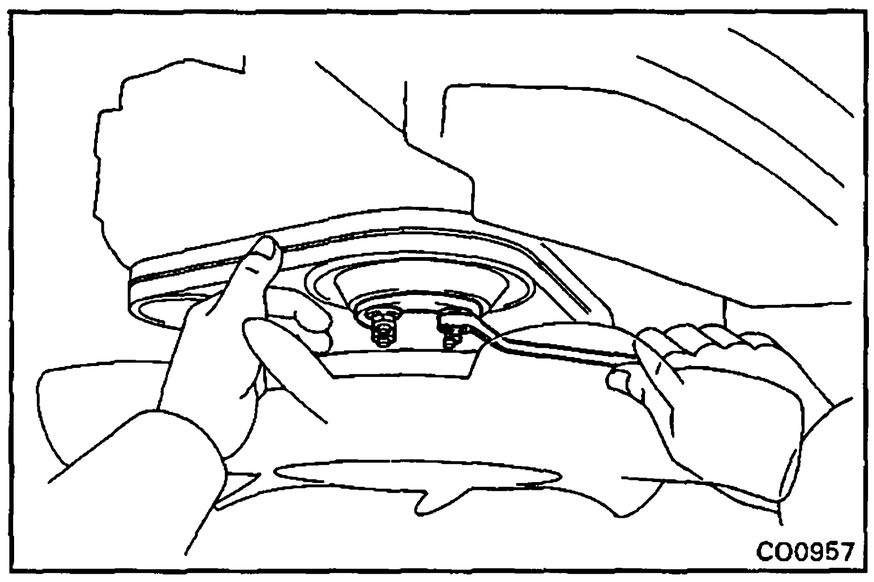

5. **INSTALL WATER PUMP PULLEY, FAN AND DRIVE BELT**
   (a) Install the pump pulley, the fluid fan and coupling (fan spacer) assembly with the four nuts.
   (b) Place the drive belt on each pulley.
   (c) Stretch the belt tight and torque the four nuts.
   Torque: 200 kg-cm (14 ft-lb, 20 N-m)
   (d) Adjust the drive belt deflection.
   (See step 3 on page CH-5)

6. **FILL WITH ENGINE COOLANT (See page CO-5)**

7. **START ENGINE AND CHECK FOR LEAKS**

THERMOSTAT

REMOVAL OF THERMOSTAT

1. **DRAIN ENGINE COOLANT (See page CO-5)**

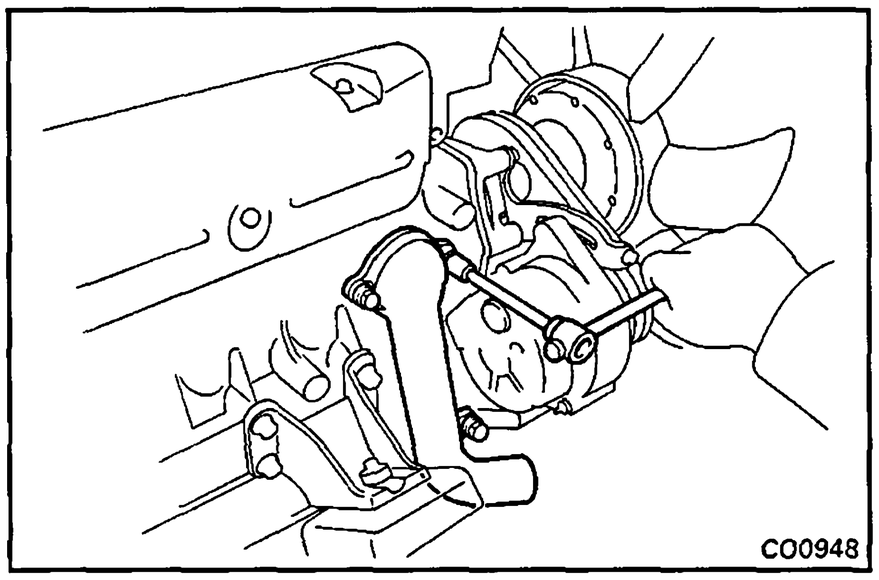

2. **REMOVE WATER INLET**

   Remove the three bolts and water inlet from the water inlet housing.

3. **REMOVE THERMOSTAT**

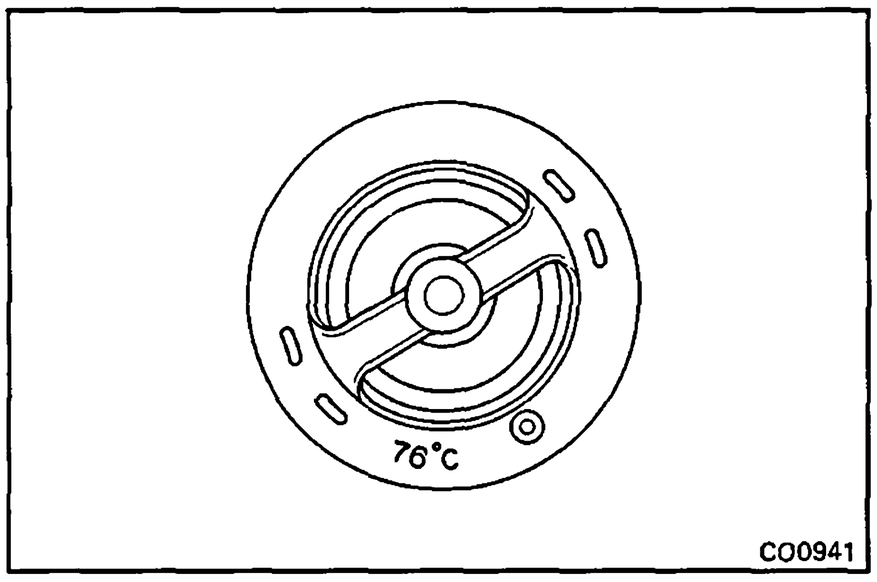

INSPECTION OF THERMOSTAT

INSPECT THERMOSTAT

HINT: The thermostat is numbered with the valve opening temperature.

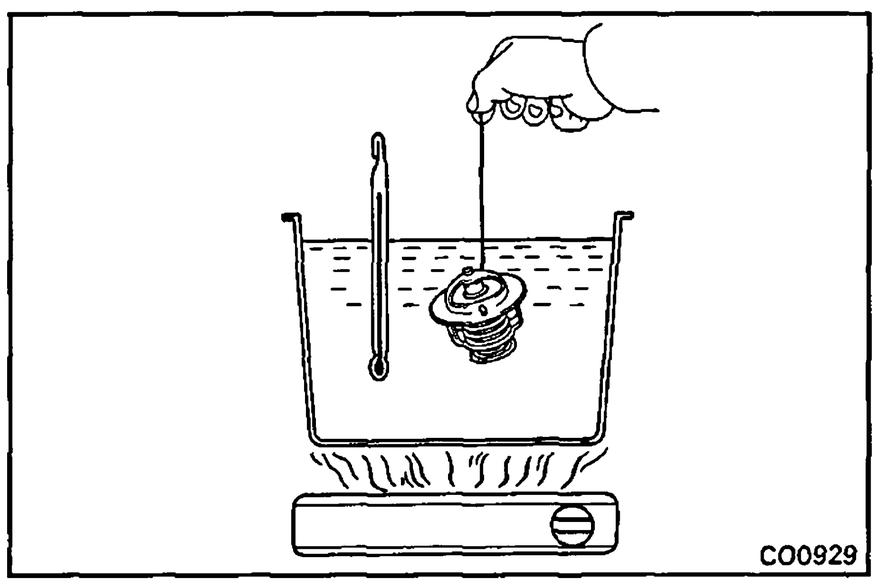

(a) Immerse the thermostat in water and gradually heat the water.

(b) Check the valve opening temperature.

Valve opening temperature: 74 – 78°C (165 – 172°F)

If the valve opening temperature is not as specified, replace the thermostat.

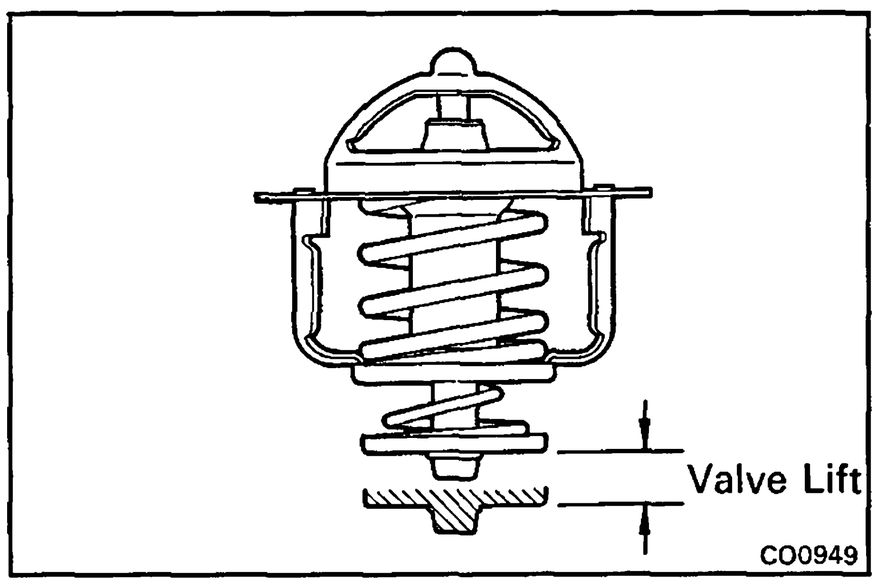

(c) Check the valve lift.

Valve lift: 10 mm (0.39 in.) or more at 90°C (194°F)

If the valve lift is not as specified, replace the thermostat.

(d) Check that the valve spring is tight when the thermostat is fully closed.

If necessary, replace the thermostat.

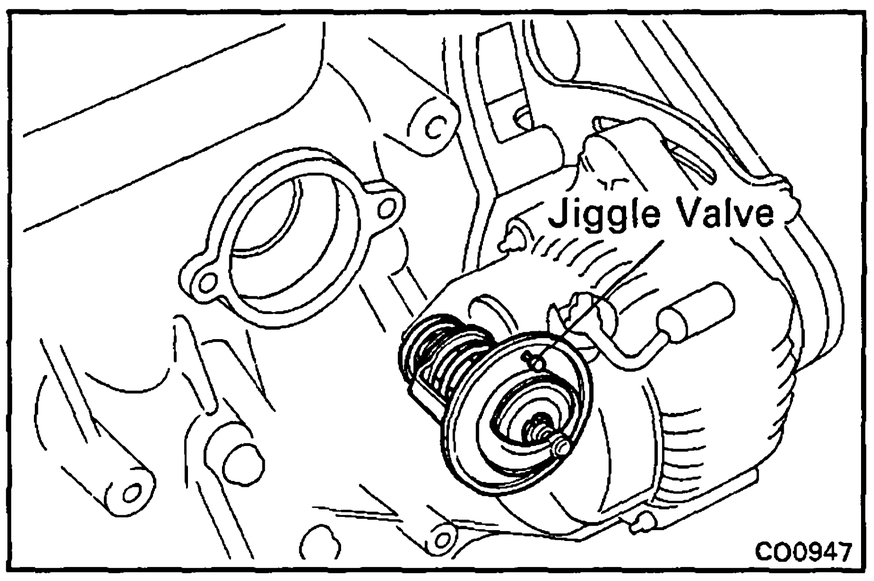

INSTALLATION OF THERMOSTAT

1. PLACE THERMOSTAT IN CYLINDER BLOCK

(a) Install a new gasket to the thermostat.

(b) Install the thermostat with the jiggle valve upward.

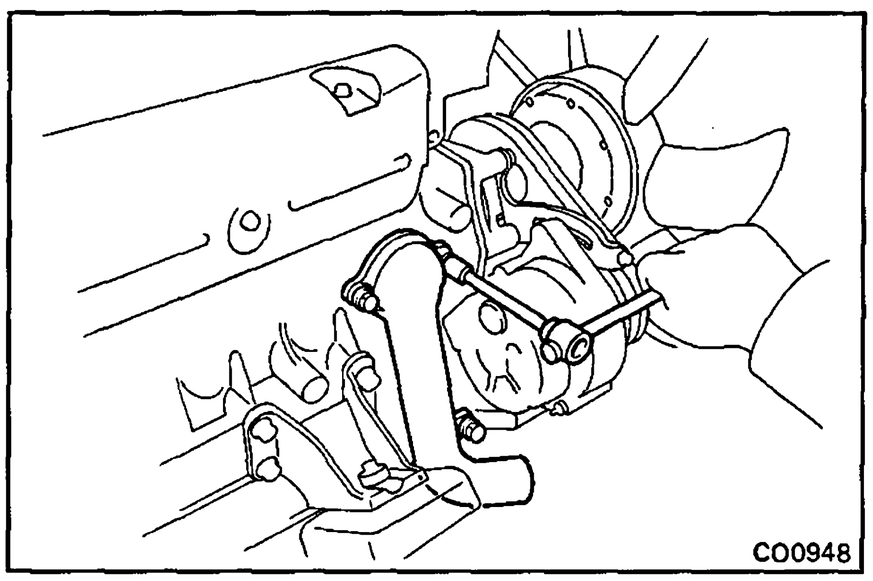

2. INSTALL WATER INLET TO CYLINDER BLOCK

Install the water inlet with the three bolts.

Torque: 200 kg-cm (14 ft-lb, 20 N-m)

NOTICE: Torque the two upper bolts first.

3. FILL WITH ENGINE COOLANT (See page CO-5)

4. START ENGINE AND CHECK FOR LEAKS

RADIATOR

CLEANING OF RADIATOR

Using water or a steam cleaner, remove any mud and dirt from the radiator core.

NOTICE: If using a high pressure type cleaner, be careful not to deform the fins of the radiator core. If the cleaner nozzle pressure is 30 – 35 kg/cm^2(427 – 498 psi, 2,942 – 3,432 kPa), keep a distance of at least 40 – 50 cm (15.75 – 19.69 in.) between the radiator core and cleaner nozzle.

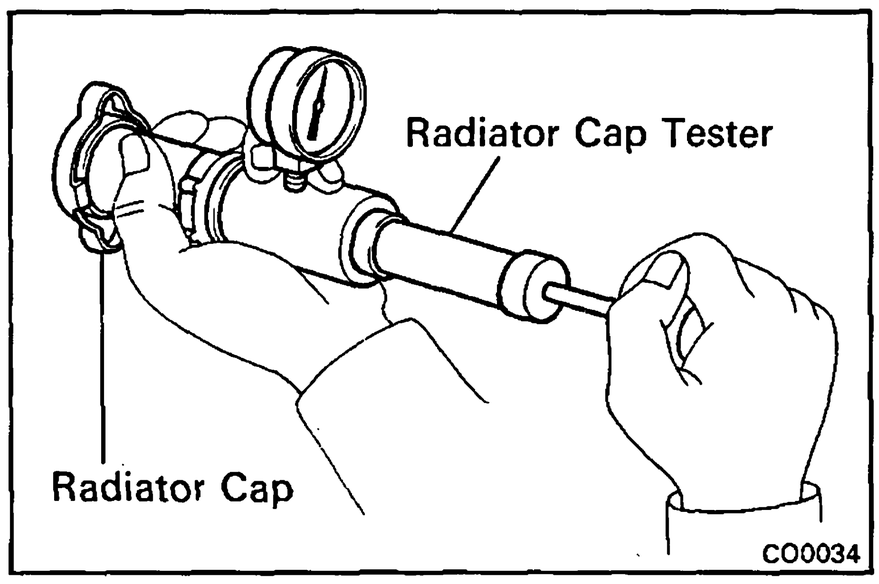

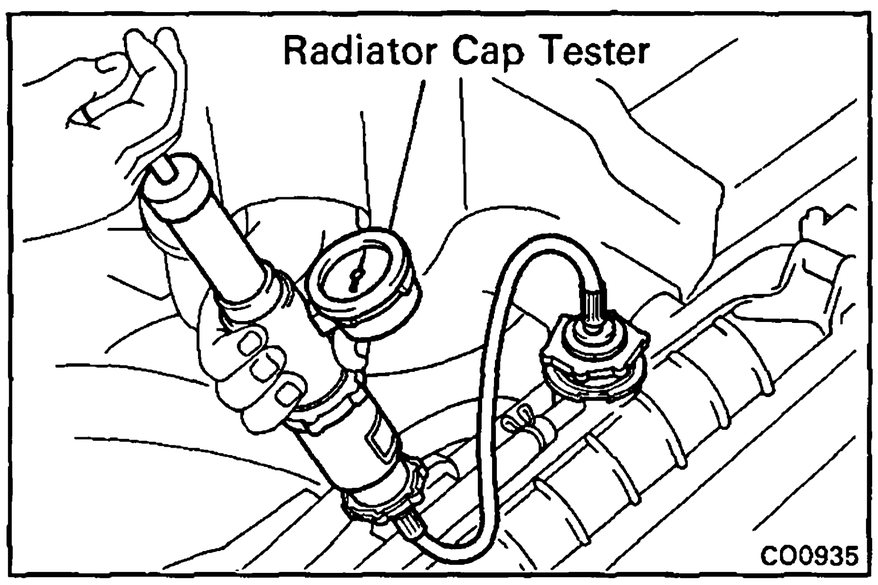

INSPECTION OF RADIATOR

1. INSPECT RADIATOR CAP

Using a radiator cap tester, pump the tester and measure the relief valve opening pressure.

Standard opening pressure:
0.75 – 1.05 kg/cm^2 (10.7 – 14.9 psi, 74 – 103 kPa)
Minimum opening pressure:
0.6 kg/cm^2 (8.5 psi, 59 kPa)

If the opening pressure is less than minimum, replace the radiator cap.

2. INSPECT COOLING SYSTEM FOR LEAKS

(a) Fill the radiator with coolant and attach a radiator cap tester.

(b) Warm up the engine.

(c) Pump it to 1.2 kg/cm^2 (17.1 psi, 118 kPa), check that pressure does not drop.

If the pressure drops, check for leaks the hoses, radiator or water pump. If no external leaks are found, check the heater core, cylinder block and head.

LUBRICATION SYSTEM

	Page
DESCRIPTION	LU-2
TROUBLESHOOTING	LU-4
OIL PRESSURE CHECK	LU-5
REPLACEMENT OF ENGINE OIL AND OIL FILTER	LU-6
OIL PUMP	LU-8
OIL COOLER, RELIEF VALVE AND CHECK VALVE	LU-15
OIL NOZZLES AND CHECK VALVES	LU-20

DESCRIPTION

A fully pressurized, fully filtered lubrication system has been adopted for this engine.

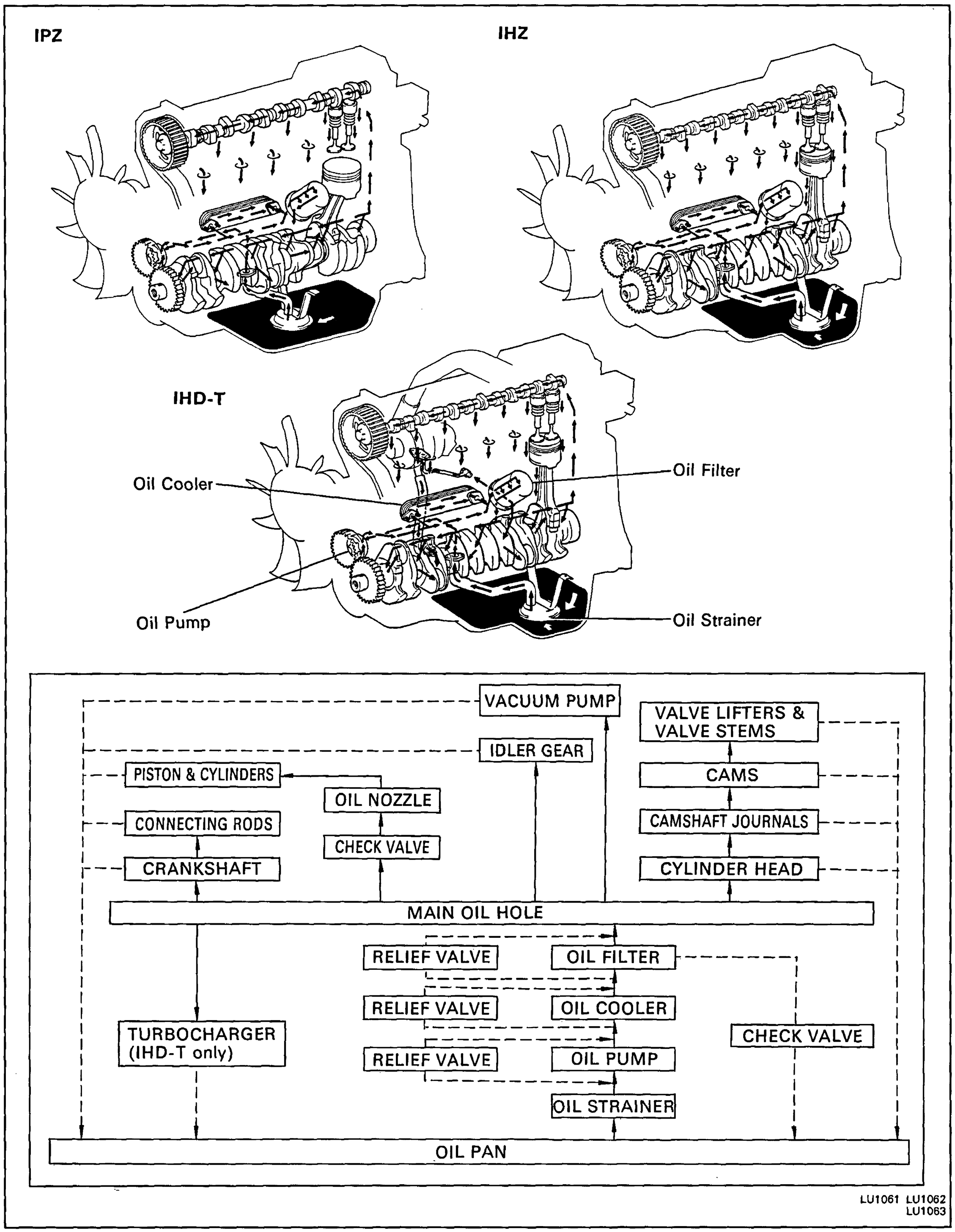

A pressure feeding lubrication system has been adopted to supply oil to the moving parts of this engine. The lubrication system consists of an oil pan, oil pump, oil filter and other external parts which supply oil to the moving parts in the engine block. The oil circuit is shown in the illustration at the top of the previous page. Oil from the oil pan is pumped up by the oil pump. After it passes through the oil filter, it is fed through the various oil holes in the crankshaft and cylinder block. After passing through the cylinder block and performing its lubricating function, the oil is returned by gravity to the oil pan. A dipstick on the center left side of the cylinder block is provided to check the oil level.

OIL PUMP

The oil pump pumps up oil from the oil pan and sends it under pressure to the various parts of the engine. An oil strainer is mounted in front of the inlet to the oil pump to remove impurities. The oil pump itself is a trochoid type pump, which uses a drive rotor and driven rotor inside the pump body. When the drive rotor rotates, the driven rotor rotates in the same direction. The axis of the driven rotor shaft is different from the center of the driven rotor, so when both rotors rotate, the space between the two rotors changes. Oil is drawn in when the space widens and is discharged when the space becomes narrow.

OIL PRESSURE REGULATOR (RELIEF VALVE)

At high engine speeds, the oil pump supplies more oil to each part that is necessary. For this reason, an oil pressure regulator which works to prevent oversupply of oil is installed on the oil pump. During normal oil supply, a coil spring and valve keep the by-pass closed, but when too much oil is being supplied, the pressure becomes extremely high, overpowering the force of the spring and opening the valves. This allows the excess oil to flow through the valve and return to the inlet of the oil pump.

OIL FILTER

The oil filter is a full flow type filter with a built-in paper filter element. Particles of metal from wear, airborn dirt, carbon and other impurities can get in the oil during use and could cause accelerated wear or siezing if allowed to circulate through the engine. The oil filter, integrated into the oil line, removes these impurities as the oil passes through it. The filter is mounted outside the engine to simplify replacement of the filter element. A relief valve is also included ahead of the filter element to relieve the high oil pressure in case the filter element becomes clogged with impurities. The relief valve opens when the oil pressure overpowers the force of the spring. Oil passing through the relief valve by-passes the oil filter and flows directly into the main oil hole in the engine.

TROUBLESHOOTING

Problem	Possible cause	Remedy	Page
Oil leakage	Cylinder head, cylinder block or oil pump body damaged or cracked	Repair as necessary	
	Oil seal faulty	Replace oil seal	EM-48, 49, 72, 105
	Gasket faulty	Replace gasket	
Low oil pressure	Oil leskage	Repair as necessary	
	Relief valve faulty	Repair relief valve	LU-8
	Oil pump faulty	Repair oil pump	LU-9
	Engine oil poor quality	Replace engine oil	LU-6
	Crankshaft bearing faulty	Replace bearing	EM-84
	Connecting rod bearing faulty	Replace bearing	EM-84
	Oil filter clogged	Replace oil filter	LU-6
High oil pressure	Relief valve faulty	Repair relief valve	LU-8

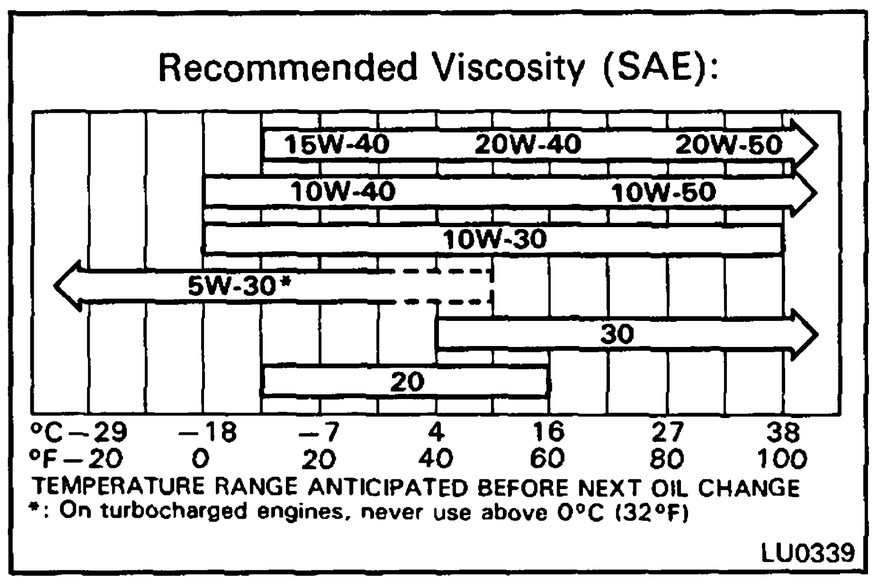

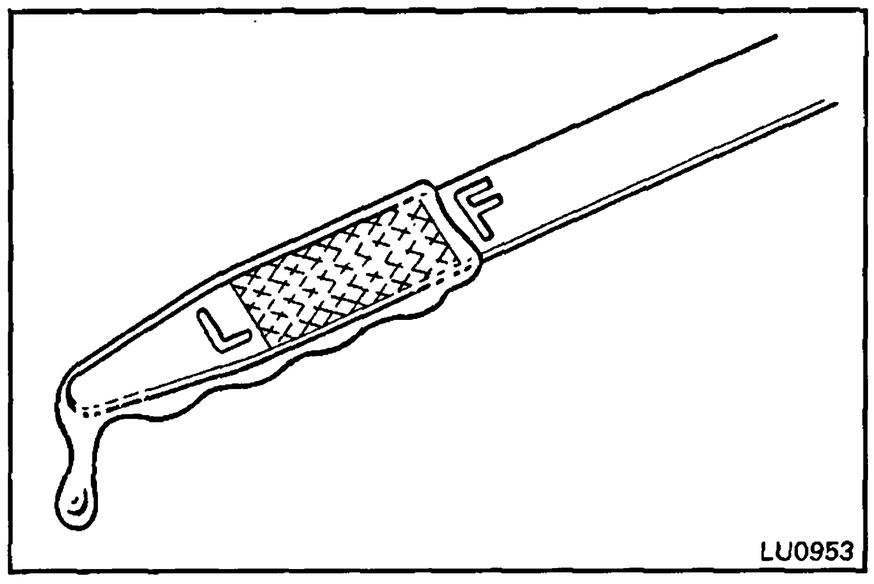

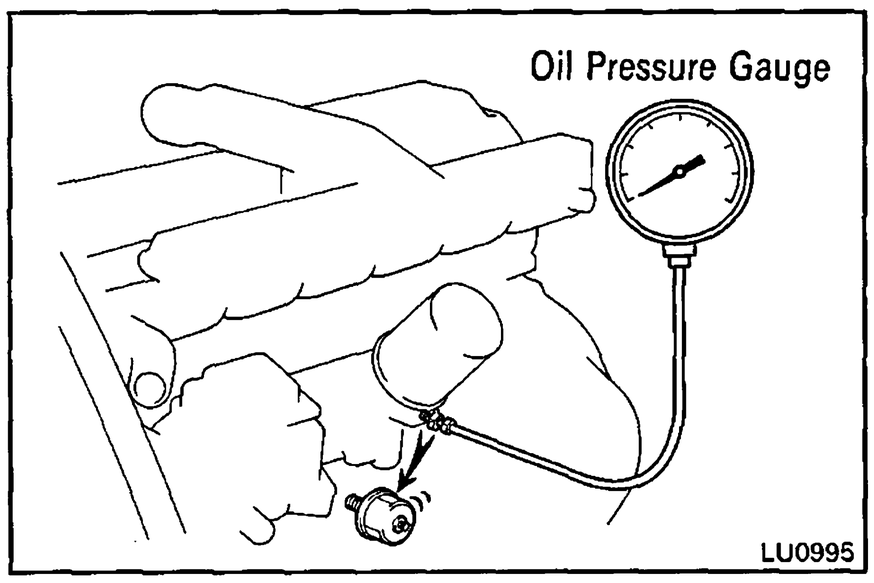

OIL PRESSURE CHECK

1. CHECK ENGINE OIL QUALITY

Check the oil for deterioration, entry of water, discoloring or thinning.

If the quality is poor, replace the oil.

Use API grade CD or better and recommended viscosity oil. (Europe)

Use API grade CC, CD or better and recommended viscosity oil. (Others)

2. CHECK ENGINE OIL LEVEL

The oil level should be between the "L" and "F" marks on the dipstick.

If low, check for leakage and add oil up to "F" mark.

NOTICE: Do not fill with engine oil above the "F" mark.

3. REMOVE OIL PRESSURE SENDER GAUGE

4. INSTALL OIL PRESSURE GAUGE

5. WARM UP ENGINE

Allow the engine to reach normal operating temperature.

6. CHECK OIL PRESSURE

Oil pressure:

At idling	**0.3 kg/cm^2 (4.3 psi, 29 kPa) or more**
At 3,000 rpm	**2.5 kg/cm^2 (36 psi, 245 kPa) or more**

7. REMOVE OIL PRESSURE GAUGE

8. REINSTALL OIL PRESSURE SENDER GAUGE

9. START ENGINE AND CHECK FOR LEAKS

REPLACEMENT OF ENGINE OIL AND OIL FILTER

NOTICE:

- **Prolonged and repeated contact with mineral oil will result in the removal of natural fats from the skin, leading to dryness, irritation and dermatitis. In addition, used engine oil contains potentially harmful contaminants which may cause skin cancer. Adequate means of skin protection and washing facilities should be provided.**
- **Care should be taken, therefore, when changing engine oil, to minimize the frequency and length of time your skin is exposed to used engine oil. Protective clothing and gloves, that cannot be penetrated by oil, should be worn. The skin should be thorougthly washed with soap and water, or use waterless hand cleaner, to remove any used engine oil. Do not use gasoline, thinners, or solvents.**
- **In order to preserve the environment, used oil and used oil filters must be disposed of only at designated disposal sites.**

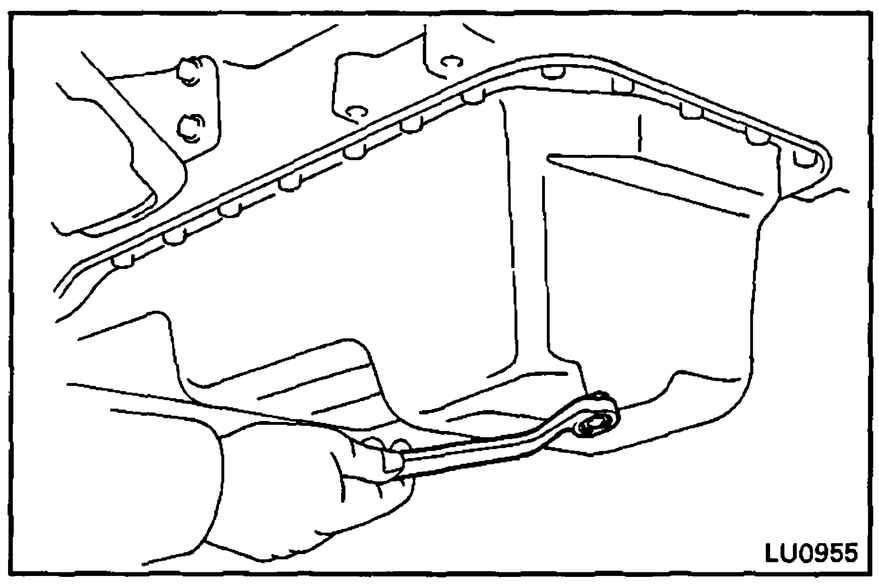

1. DRAIN ENGINE OIL

(a) Remove the oil filler cap.

(b) Remove the oil drain plug, and drain the oil into a container.

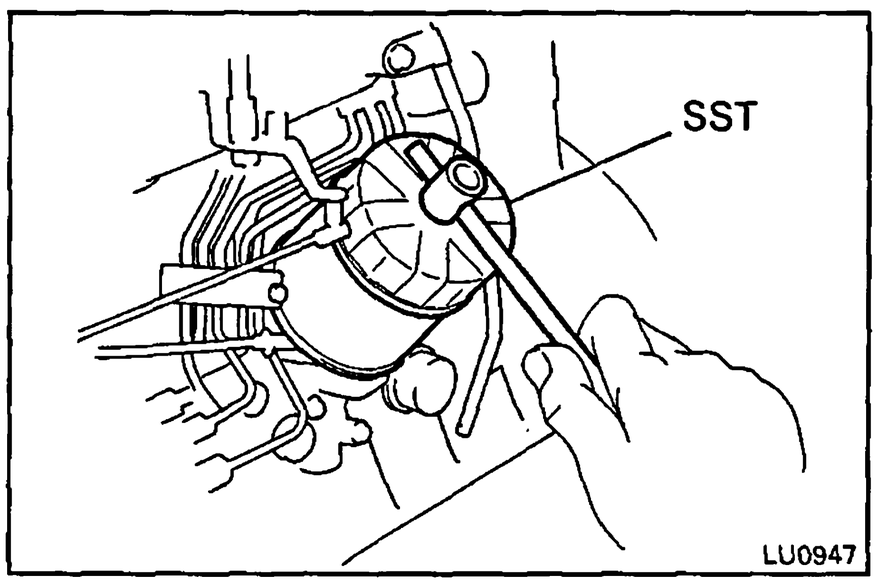

2. REPLACE OIL FILTER

(a) Using SST, remove the oil filter.

SST 09228-10001

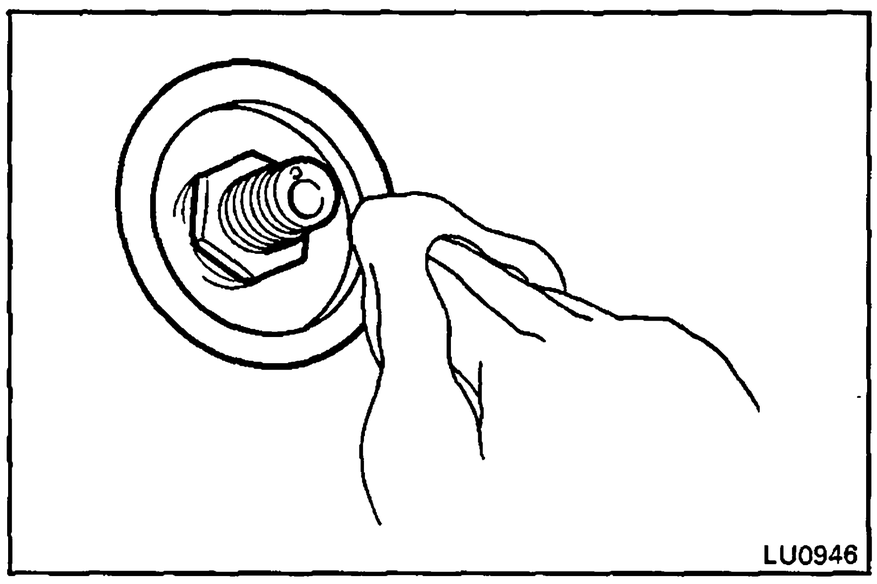

(b) Clean and check the oil filter installation surface.

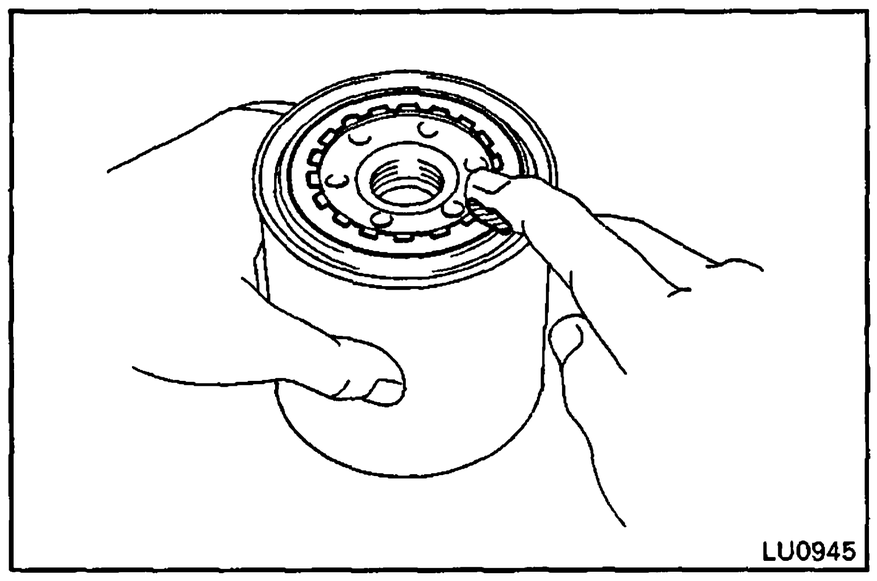

(c) Apply clean engine oil to the gasket of a new oil filter.

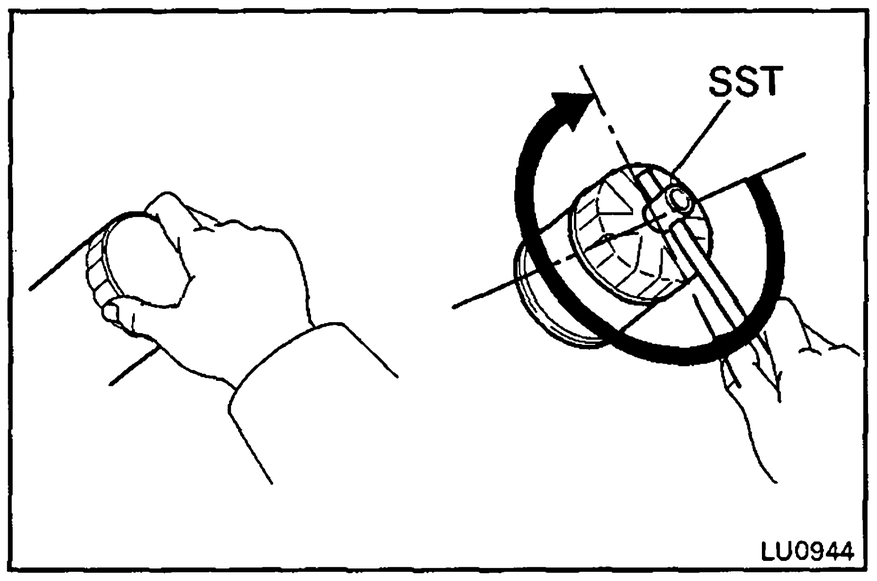

(d) Lightly screw the oil filter into place, and tighten it until the gasket contacts the seat.

(e) Using SST, tighten it additional 3/4 turn.

SST 09228-10001

3. **FILL WITH ENGINE OIL**

(a) Clean and install the oil drain plug with a new gasket.

Torque: 250 kg-cm (18 ft-lb, 25 N·m)

(b) Fill with new engine oil (API grade CC (ex. Europe), CD or better and recommended viscosity oil).

Capacity (PZJ70, 73, 75):
Drain and refill
w/ Oil filter change
9.0 liters (9.5 US qts, 7.9 Imp. qts)
w/o Oil filter change
7.7 liters (8.1 US qts, 6.8 Imp. qts)
Dry fill 9.3 liters (9.8 US qts, 8.2 Imp. qts)

Capacity (HZJ70, 73, 75):
Drain and refill
w/ Oil filter change
9.5 liters (10.0 US qts, 8.4 Imp. qts)
w/o Oil filter change
8.2 liters (8.7 US qts, 7.2 Imp. qts)
Dry fill 9.8 liters (10.4 US qts, 8.6 Imp. qts)

Capacity (HZJ80 and HDJ80):
Drain and refill
w/ Oil filter change
9.3 liters (9.8 US qts, 8.1 Imp. qts)
w/o Oil filter change
8.0 liters (8.5 US qts, 7.0 Imp. qts)
Dry fill 9.6 liters (10.1 US qts, 8.4 Imp. qts)

Capacity (HZB30 and HDB30):
Drain and refill
w/ Oil filter change
9.8 liters (10.4 US qts, 8.6 Imp. qts)
w/o Oil filter change
8.5 liters (9.0 US qts, 7.5 Imp. qts)
Dry fill 10.1 liters (10.7 US qts, 8.9 Imp. qts)

(c) Reinstall the oil filler cap.

4. **START ENGINE AND CHECK FOR LEAKS**

5. **RECHECK ENGINE OIL LEVEL (See page LU-5)**

OIL PUMP

COMPONENT

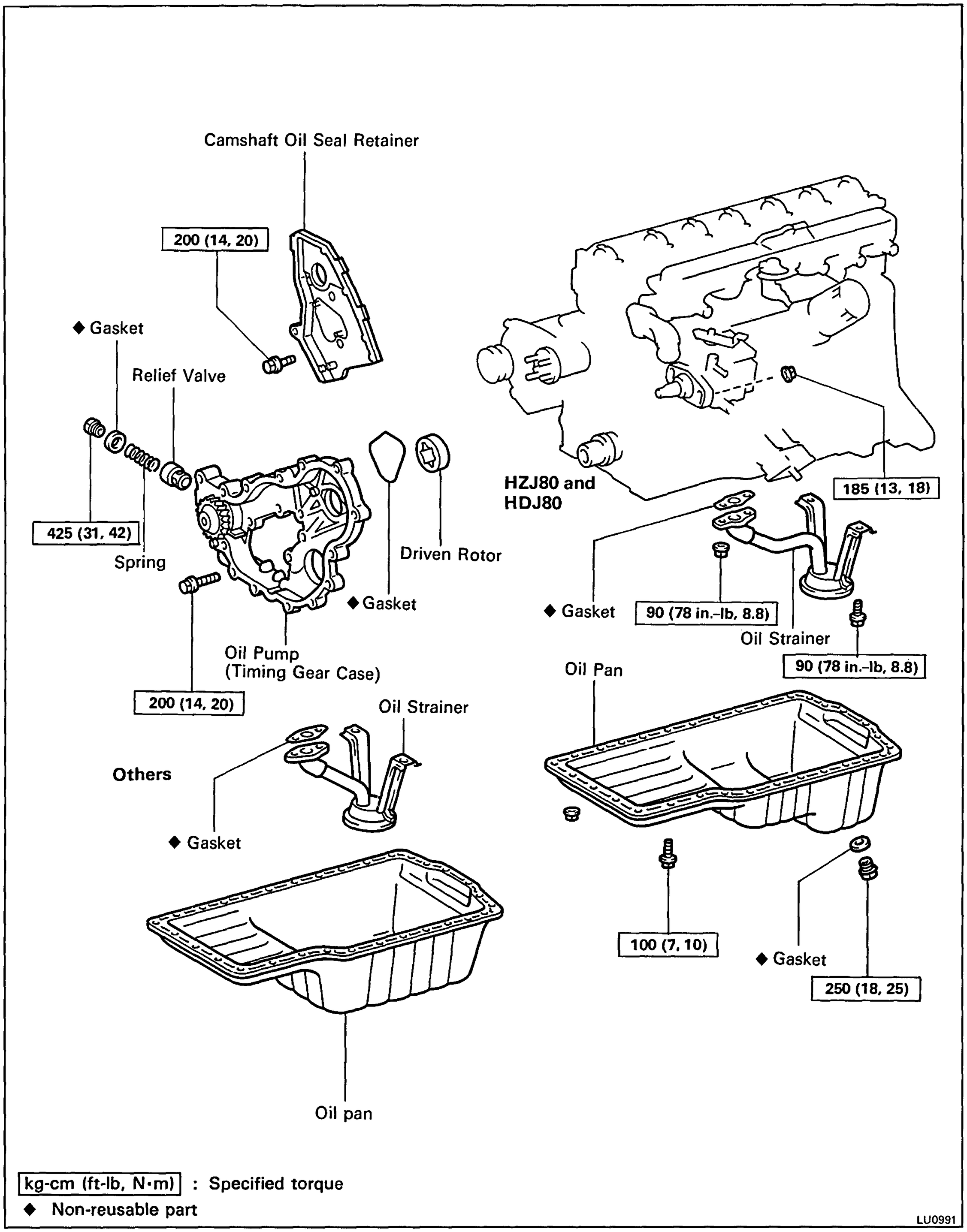

kg-cm (ft-lb, N·m) : Specified torque

◆ Non-reusable part

LU0991

REMOVAL OF OIL PUMP

(See page LU-8)

HINT: When repairing the oil pump, the oil pan and strainer should be removed and cleaned.

1. **DRAIN ENGINE COOLANT (See page CO-4)**

2. **DRAIN ENGINE OIL (See page LU-6)**

3. **REMOVE TIMING GEARS (See steps 1 to 12 on pages EM-43 to 45)**

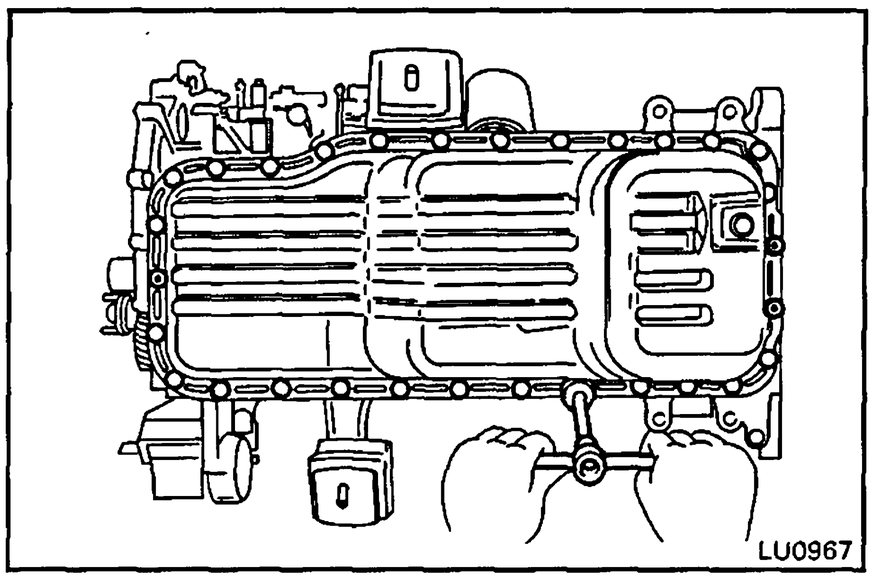

4. **REMOVE OIL PAN**

(a) Remove the twenty-three bolts (1PZ) or twenty-seven bolts (1HZ and IHD-T) and three nuts.

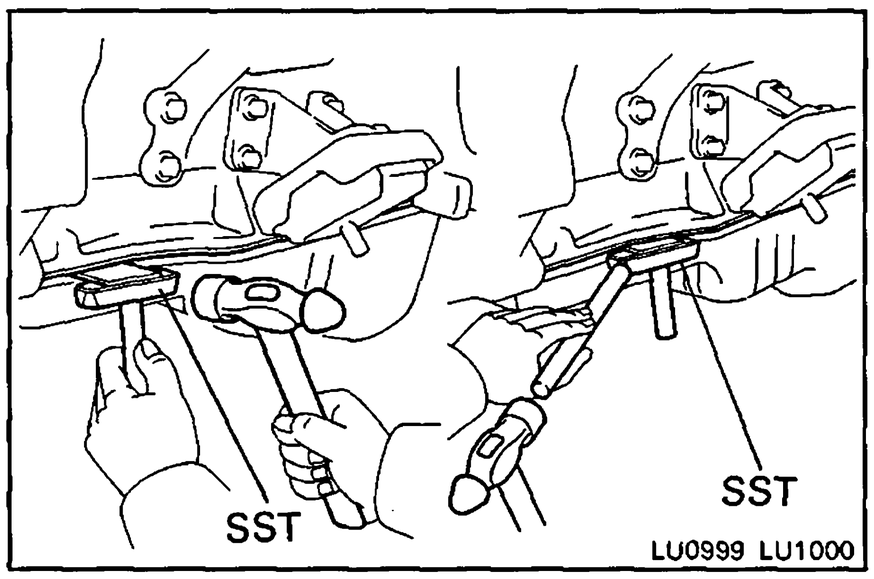

(b) Insert the blade of SST between the cylinder block and oil pan, cut off applied sealer and remove the oil pan.

SST 09032-00100

NOTICE:

- **Do not use SST for the timing gear case side and rear oil seal retainer.**
- **Be careful not to damage the oil pan flange.**

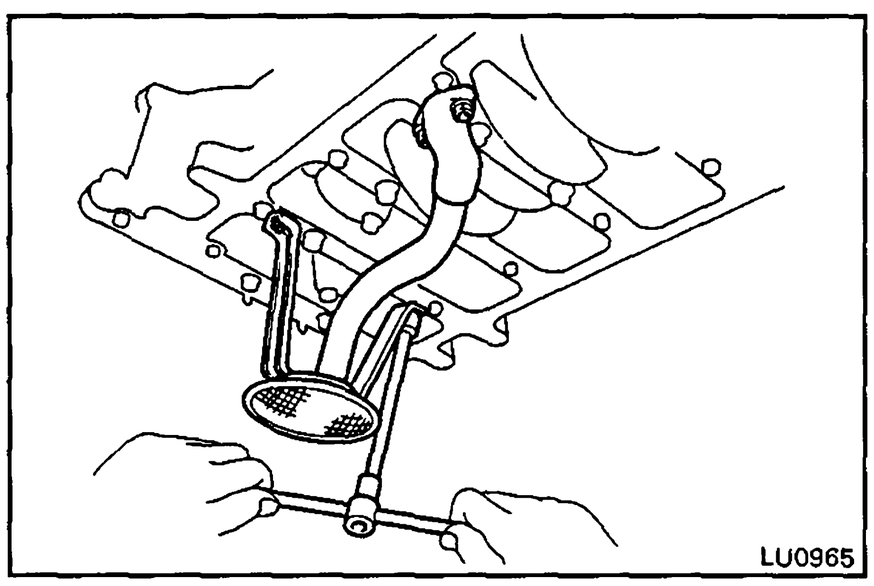

5. **REMOVE OIL STRAINER**

Remove the two bolts, two nuts, oil strainer and gasket.

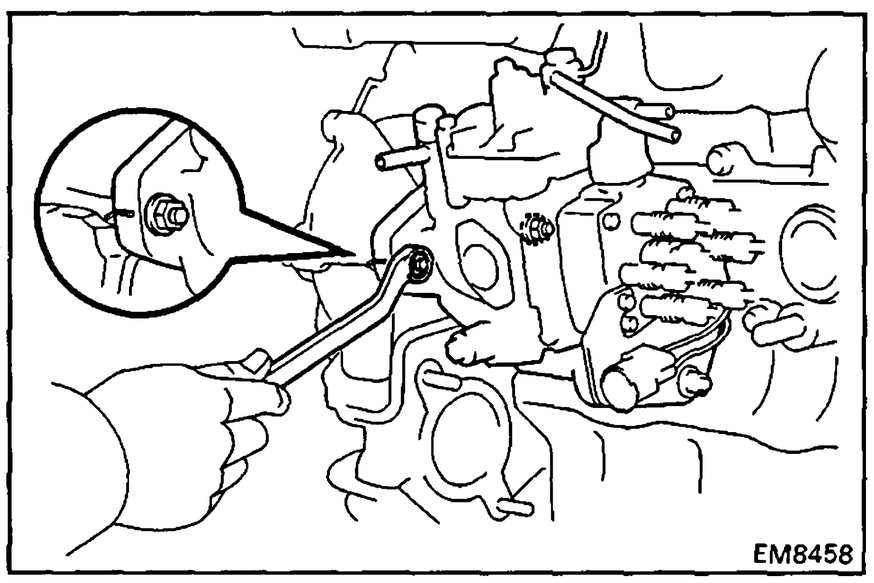

6. **REMOVE OIL PUMP (TIMING GEAR CASE)**

(a) Before removing the two nuts holding the timing gear case to the injection pump, check if the injection pump period lines are aligned.

If not, place new matchmarks for reinstallation.

(b) Remove the two nuts.

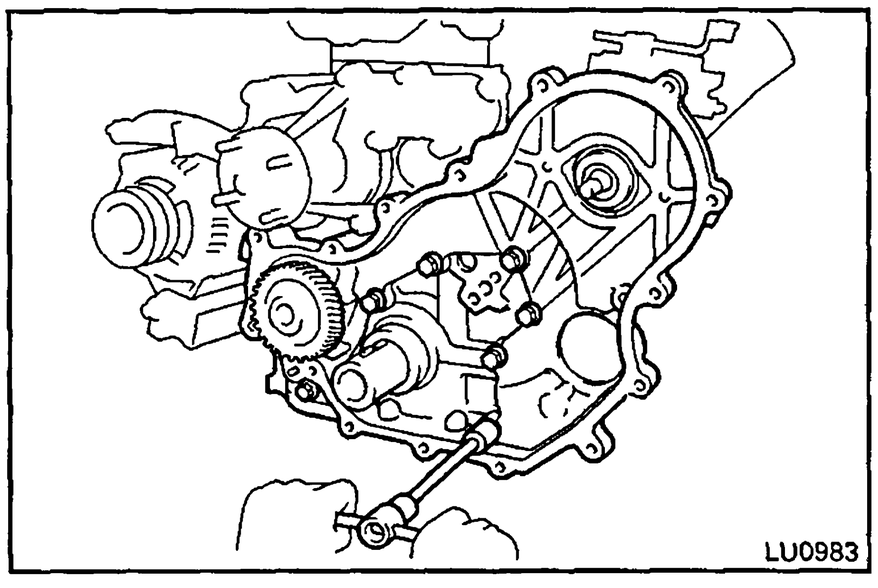

(c) Remove the seven bolts, timing gear case and gasket.

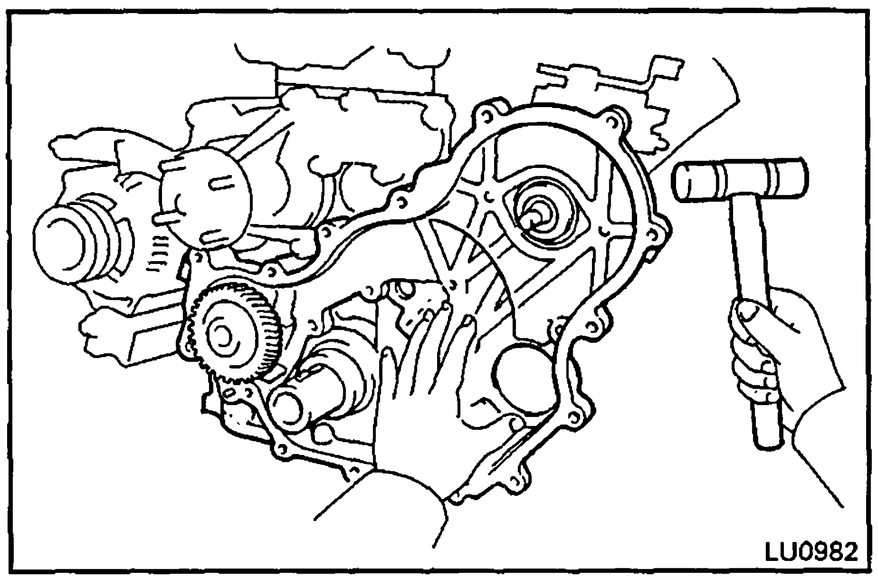

(d) Using a plastic-faced hammer, lightly tap out the timing gear case.

(e) Remove the gasket.

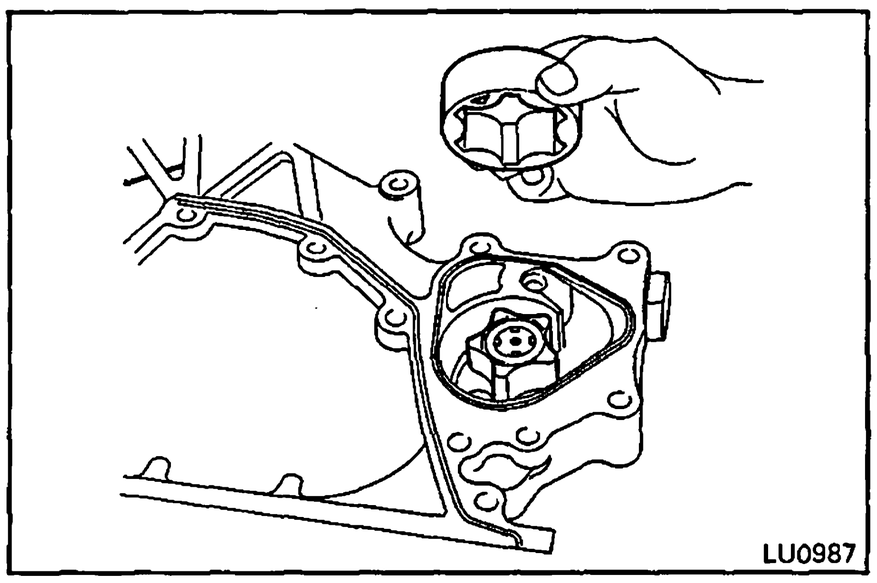

DISASSEMBLY OF OIL PUMP

1. REMOVE DRIVEN ROTOR

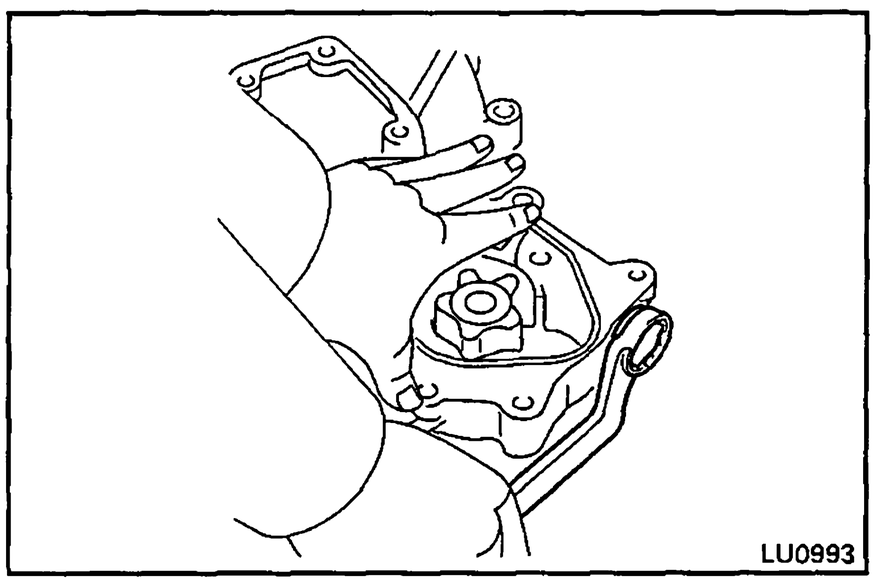

2. REMOVE RELIEF VALVE

Remove the plug, gasket, spring and relief valve.

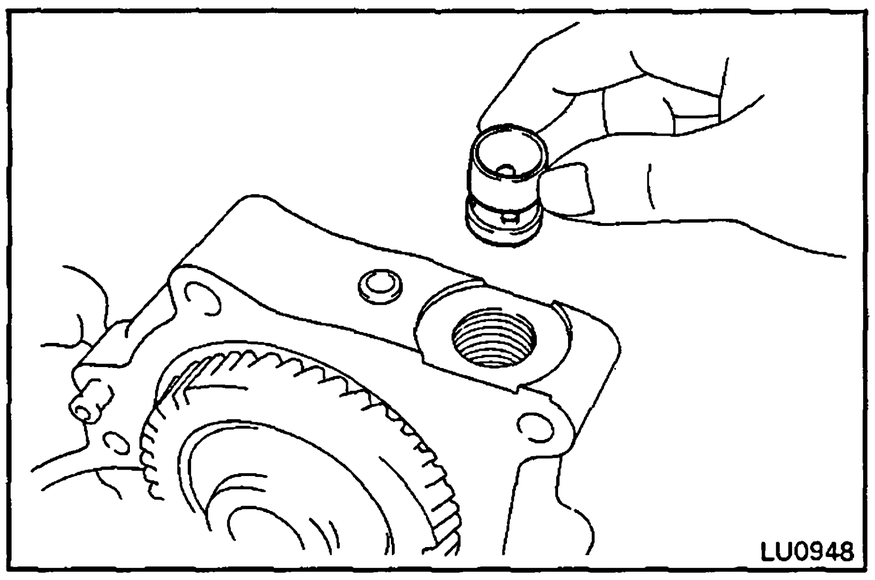

INSPECTION OF OIL PUMP

1. INSPECT RELIEF VALVE

Coat the valve with engine oil and check that it falls smoothly into the valve hole by its own weight.

If it does not, replace the relief valve. If necessary, replace the oil pump assembly.

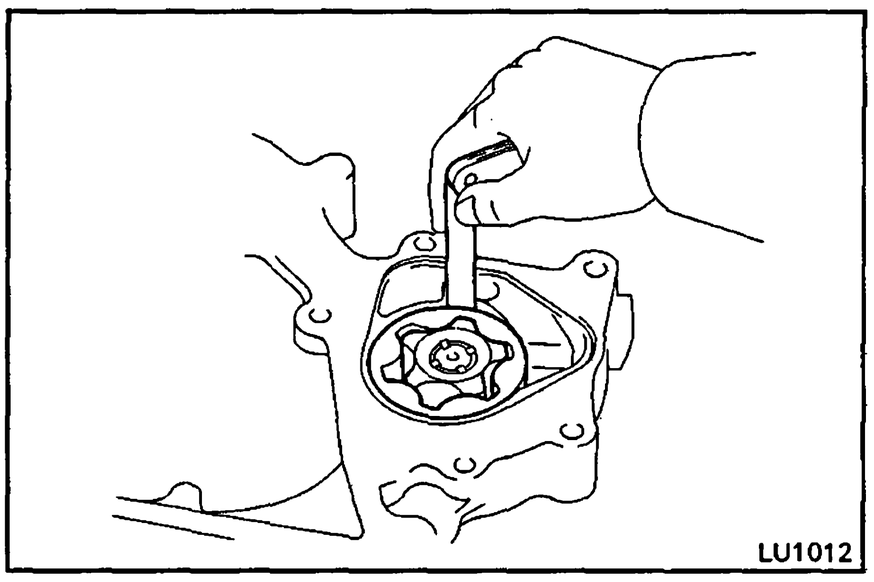

2. INSPECT DRIVE AND DRIVEN ROTORS

A. Inspect rotor body clearance

Using a thickness gauge, measure the clearance between the driven rotor and body.

Standard body clearance: 0.10 – 0.17 mm (0.039 – 0.0067 in.)
Maximum body clearance: 0.20 mm (0.0079 in.)

If the body clearance is greater than maximum, replace the oil pump assembly.

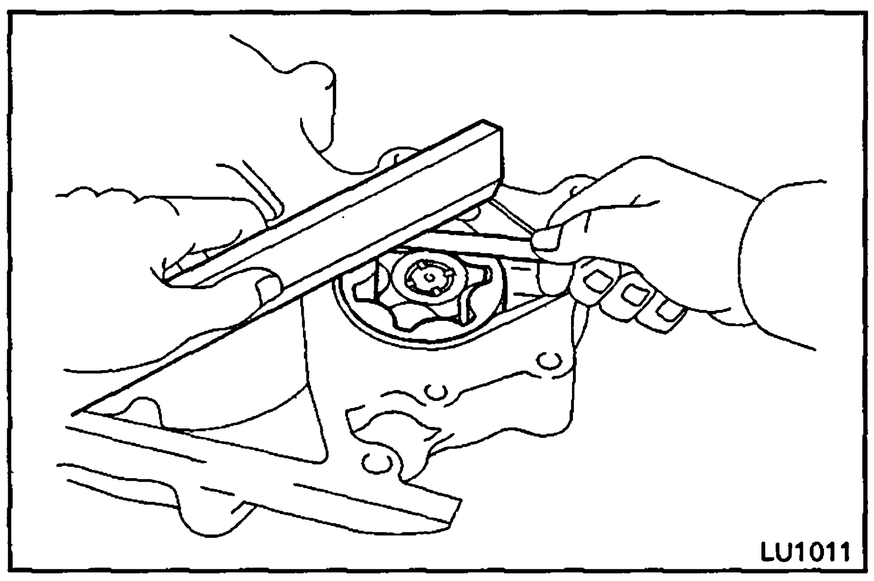

B. Inspect rotor side clearance

Using a thickness gauge and precision straight edge, measure the clearance between the rotors and precision straight edge.

Standard side clearance: 0.03 – 0.09 mm (0.0012 – 0.0035 in.)
Maximum side clearance: 0.15 mm (0.0059 in.)

If the side clearance is greater than maximum, replace the oil pump assembly.

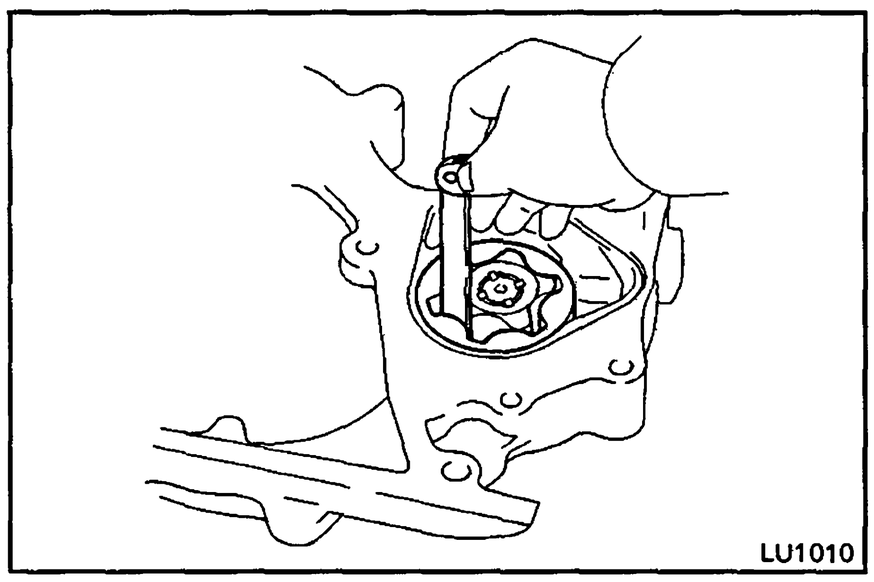

C. Inspect rotor tip clearance

Using a thickness gauge, measure the clearance between the drive and driven rotors.

Standard tip clearance: 0.08 – 0.16 mm (0.0031 – 0.0063 in.)
Maximum tip clearance: 0.21 mm (0.0083 in.)

If the tip clearance is greater than maximum, replace the oil pump assembly.

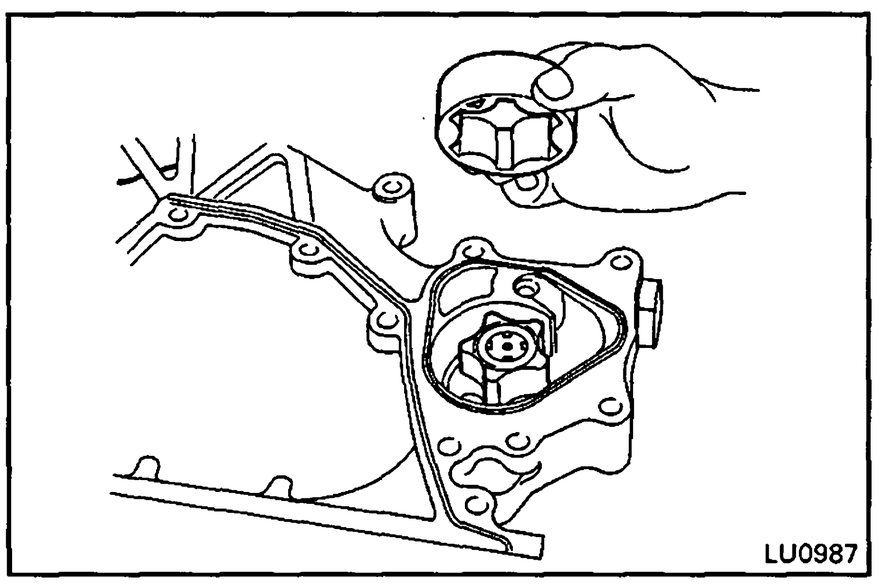

ASSEMBLY OF OIL PUMP

(See page LU-8)

1. INSTALL DRIVEN ROTOR

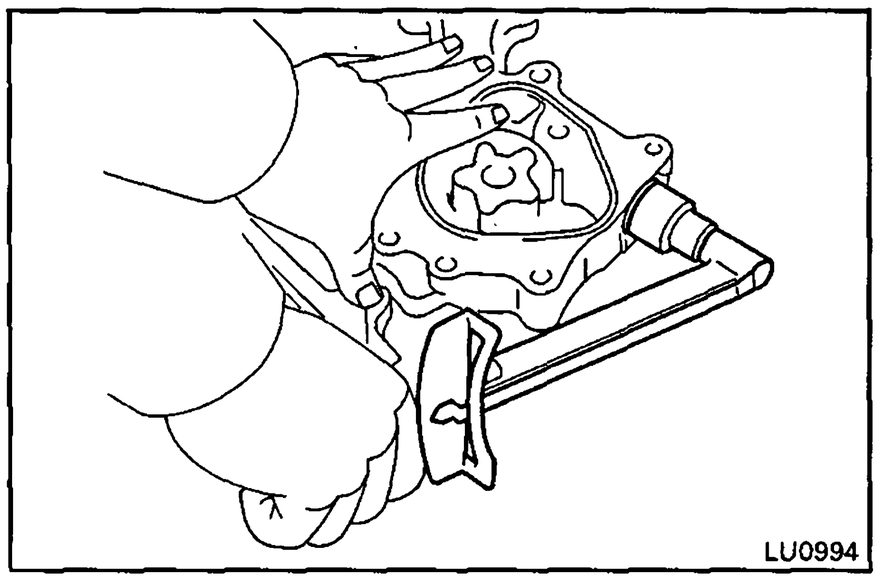

2. INSTALL RELIEF VALVE

(a) Insert the relief valve and spring into the installation hole of the timing gear case.

(b) Install a new gasket and the plug.

Torque: 425 kg-cm (31 ft-lb, 42 N·m)

INSTALLATION OF OIL PUMP

(See page LU-8)

1. INSTALL OIL PUMP (TIMING GEAR CASE)

(a) Remove any old packing (FIPG) material and be careful not to drop any oil on the contact surfaces of the timing gear case and cylinder block.

- Using a razor blade and gasket scraper, remove all the old packing (FIPG) material from the gasket surfaces and sealing groove.
- Thoroughly clean all components to remove all the loose material.
- Using a non-residue solvent, clean both sealing surfaces.

(b) Apply seal packing to the timing gear case as shown in the illustration.

Seal packing: Part No.08826-00080 or equivalent

- Install a nozzle that has been cut to a 2 – 3 mm (0.08 – 0.12 in.) opening.
- Parts must be assembled within 5 minutes of application. Otherwise the material must be removed and reapplied.
- Immediately remove nozzle from the tube and reinstall cap.

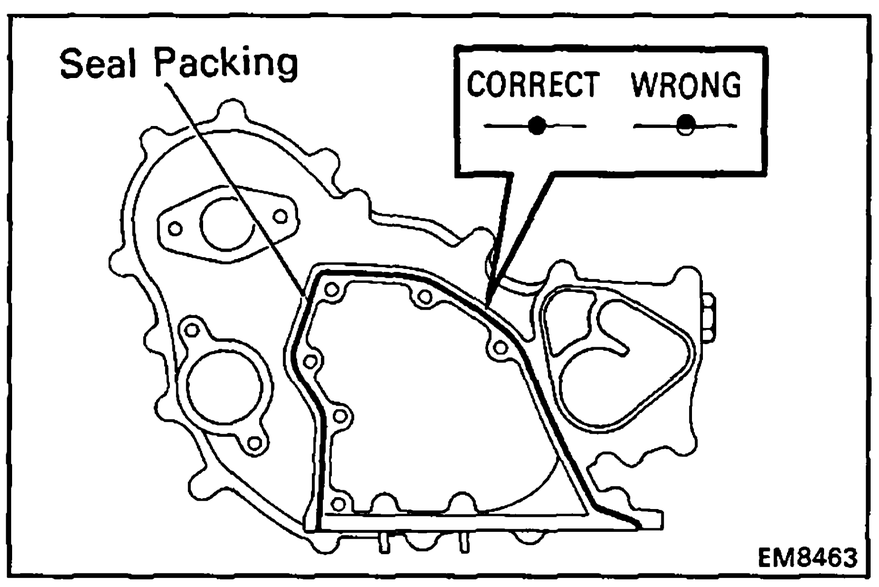

(c) Place a new gasket into the groove of the timing gear case as shown in the illustration.

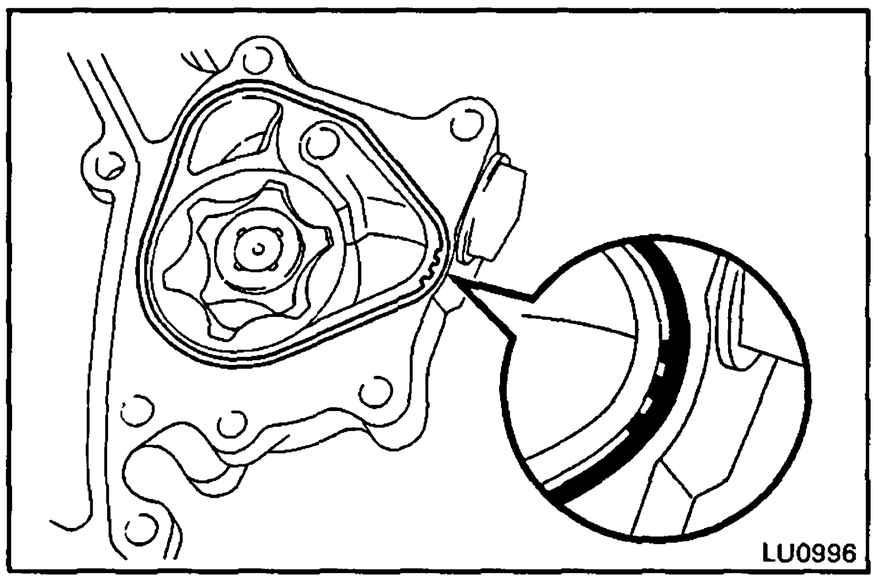

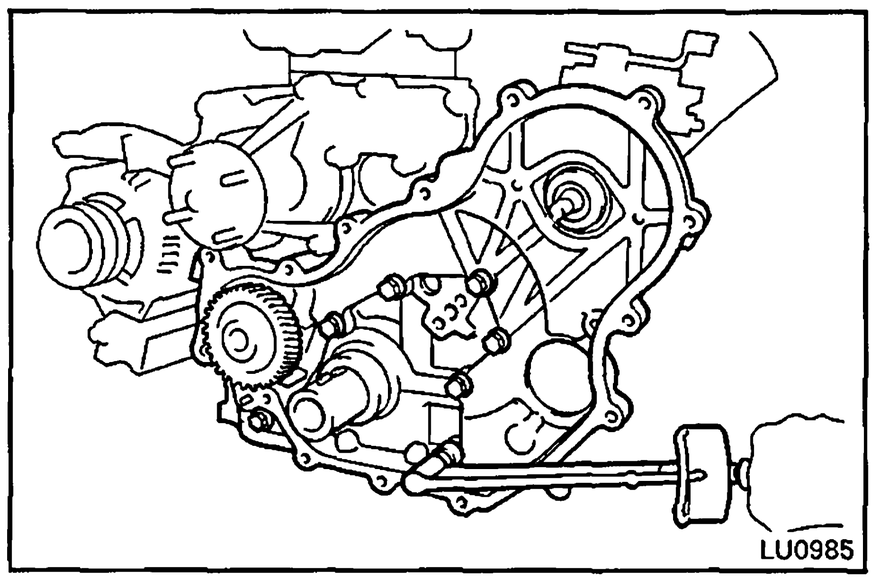

(d) Install the timing gear case with the seven bolts.

Torque: 200 kg-cm (14 ft-lb, 20 N·m)

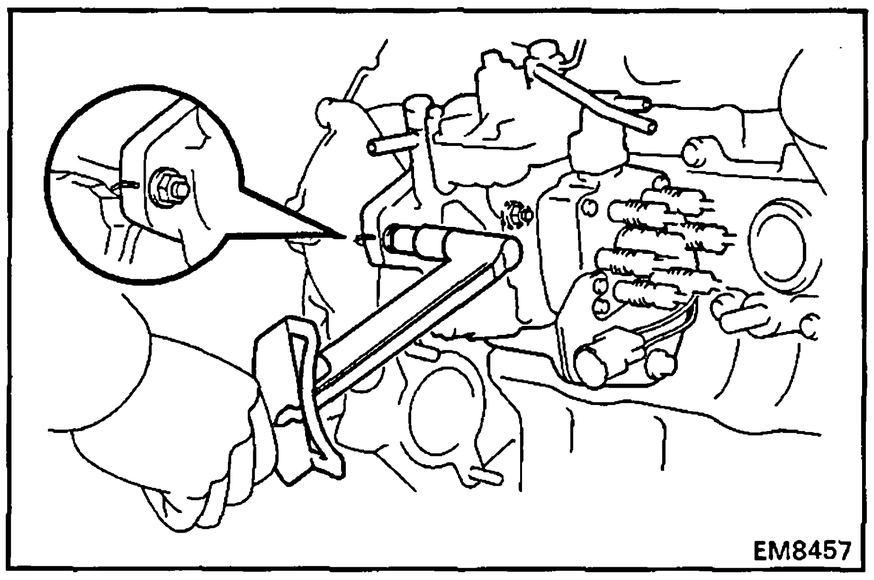

(e) Install the two nuts holding the injection pump to the timing gear case.

Torque: 185 kg-cm (13 ft-lb, 18 N·m)

(f) Check that the injection pump period lines (or matchmarks) are aligned.

If not correct, align the period lines (or matchmarks) by tilting the injection pump.

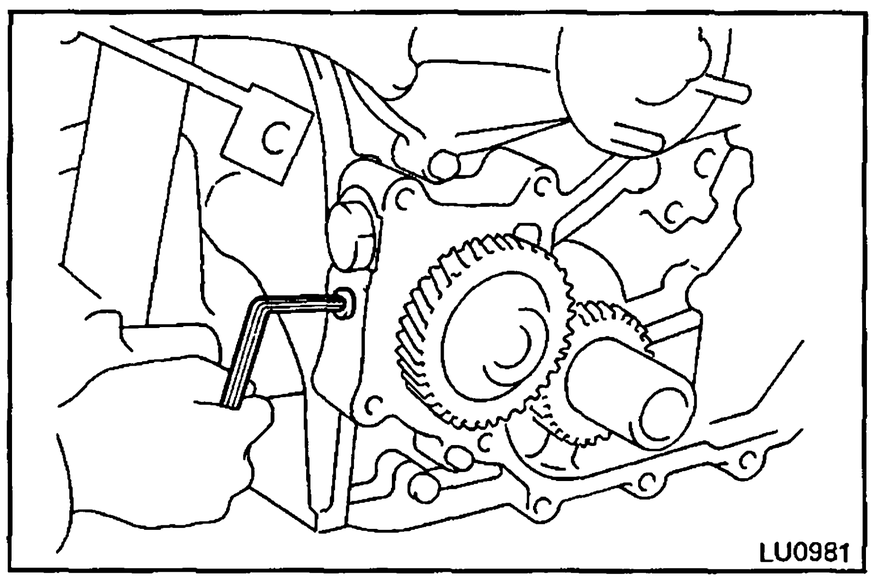

2. POUR ENGINE OIL INTO OIL PUMP

(a) Using a 5 mm hexagon wrench, remove the taper screw plug.

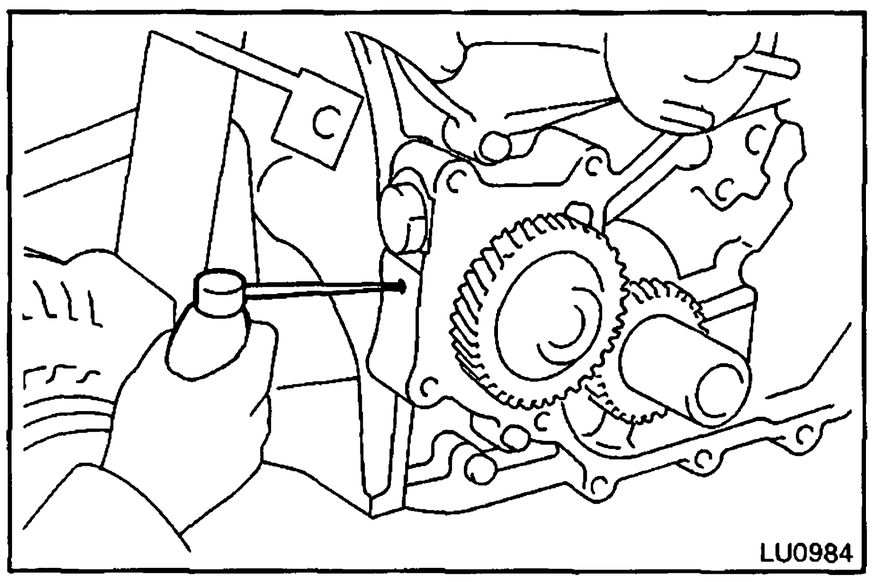

(b) Pour in approx. 10 cc (0.061 cu in.) of engine oil into the oil pump.

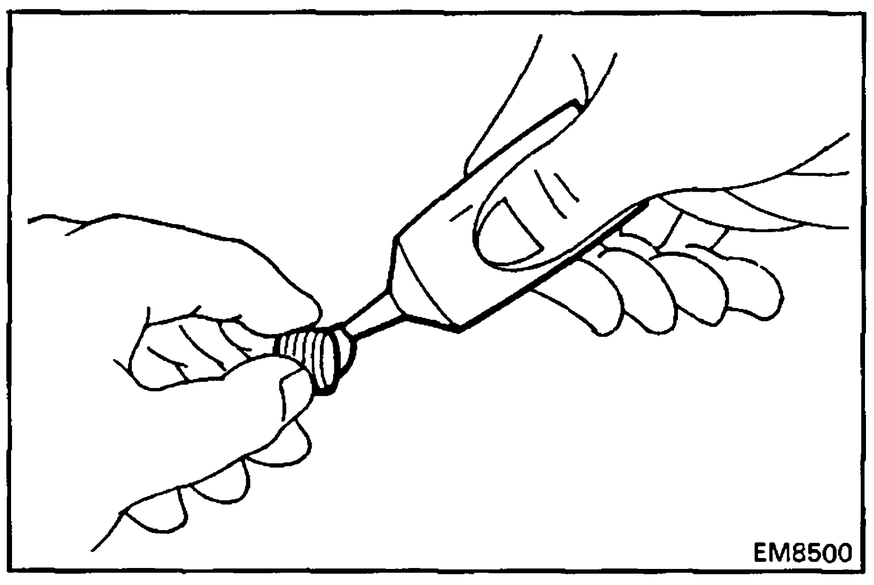

(c) Apply adheshive to two or three threads of the taper screw.

Adhesive: Part No. 08833-00070, THREE BOND 1324 or equivalent

(d) Using a 5 mm hexagon wrench, install the taper screw.

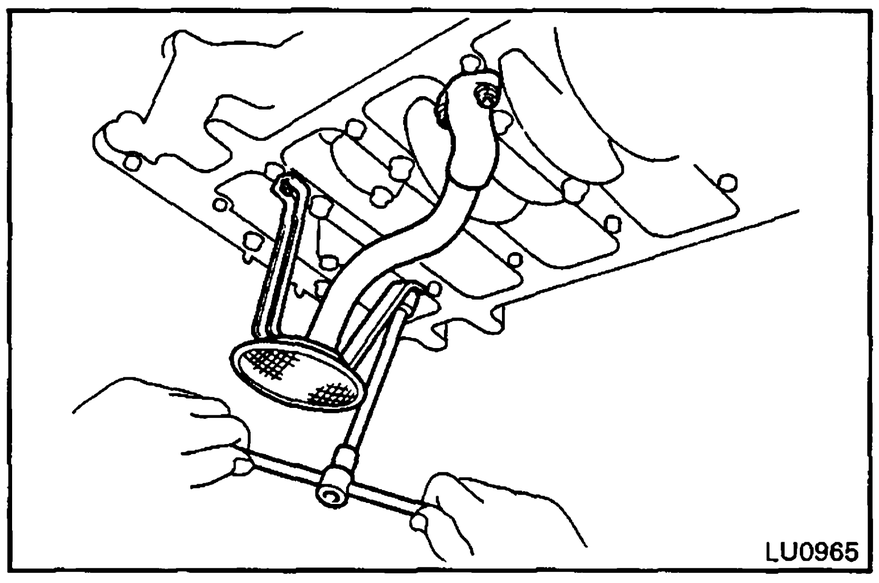

3. **INSTALL OIL STRAINER**

Install a new gasket and the oil strainer with the two bolts and two nuts.

Torque: 90 kg-cm (78 in.-lb, 8.8 N·m)

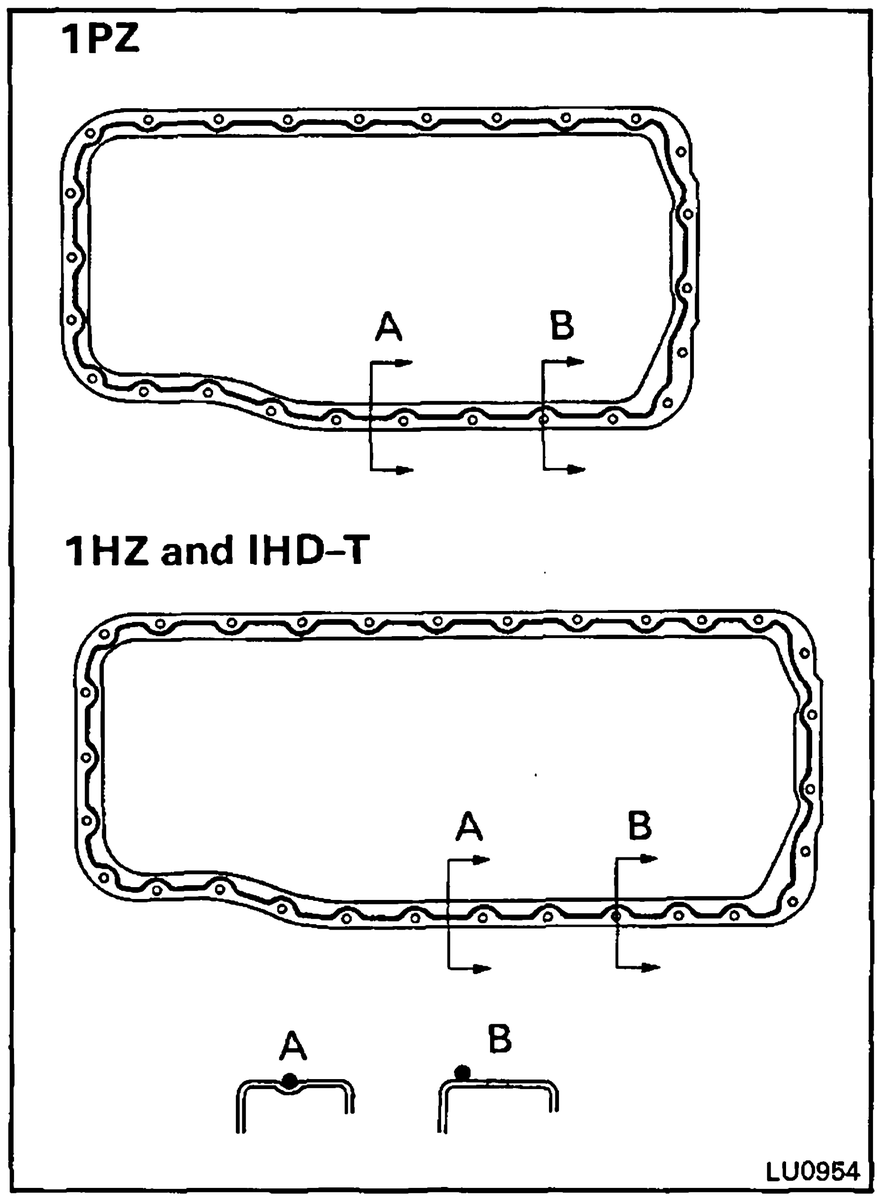

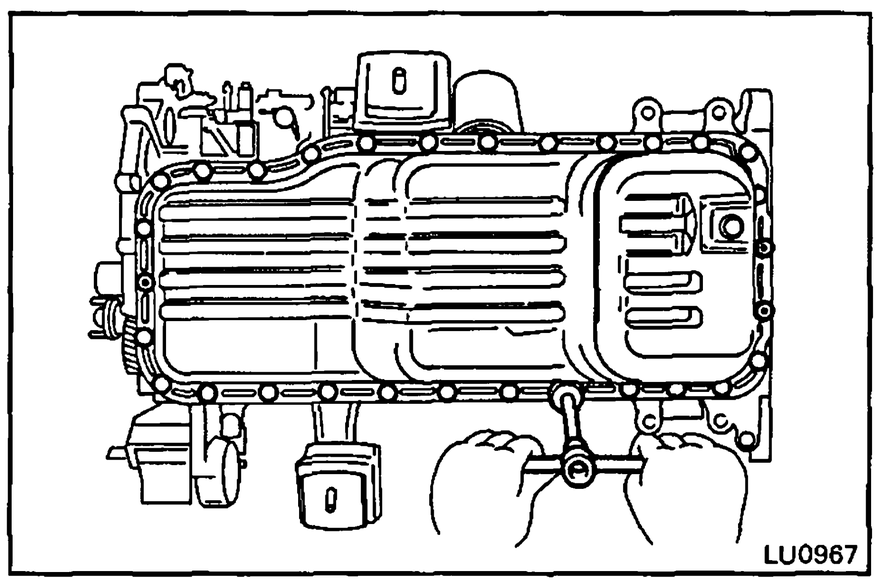

4. **INSTALL OIL PAN**

(a) Remove any old packing (FIPG) material and be careful not to drop any oil on the contact surfaces of the oil pan and cylinder block.

- Using a razor blade and gasket scraper, remove all the old packing (FIPG) material from the gasket surfaces and sealing groove.
- Thoroughly clean all components to remove all the loose material.
- Using a non-residue solvent, clean both sealing surfaces.

NOTICE: Do not use a solvent which will affect the painted surfaces.

(b) Apply seal packing to the oil pan as shown in the illustration.

Seal packing: Part No.08826-00080 or equivalent

- Install a nozzle that has been cut to a 5 mm (0.20 in.) opening.
- Parts must be assembled within 5 minutes of application. Otherwise the material must be removed and reapplied.
- Immediately remove nozzle from the tube and reinstall cap.

(c) Install the oil pan with the twenty-three bolts (1PZ) or twenty-seven bolts (1HZ and 1HD-T) and three nuts.

Torque: 100 kg-cm (7 ft-lb, 10 N·m)

5. **INSTALL TIMING GEARS**
(See steps 2 to 12 on pages EM-50 to 53)

6. **FILL WITH ENGINE OIL (See page LU-7)**

7. **FILL WITH ENGINE COOLANT (See page CO-5)**

8. **START ENGINE AND CHECK FOR LEAKS**

OIL COOLER, RELIEF VALVE AND CHECK VALVE

COMPONENTS

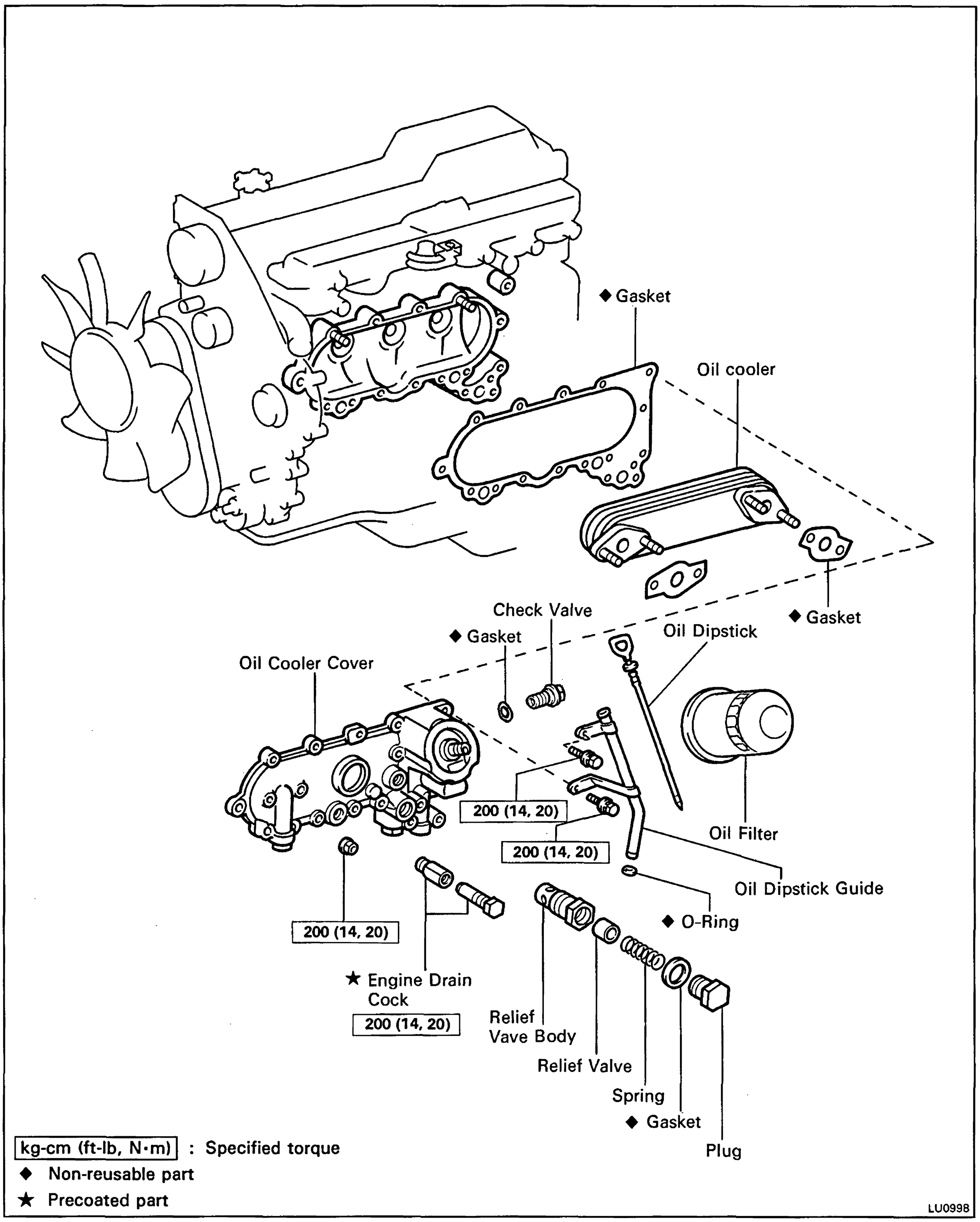

REMOVAL OF OIL COOLER, RELIEF VALVE AND CHECK VALVE

(See page LU- 15)

1. **DRAIN ENGINE COOLANT (See page CO-4)**

2. **REMOVE OIL FILTER (See page LU-6)**

3. **REMOVE INJECTION PUMP (See page FU-27)**

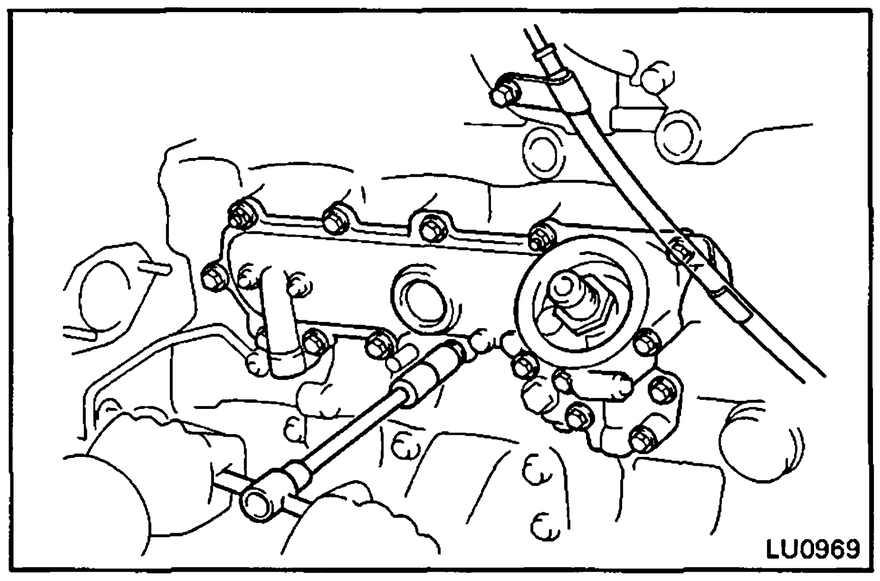

4. **REMOVE OIL DIPSTICK AND GUIDE**
   (a) Remove the two bolts, oil dipstick and guide.
   (b) Remove the oil ring from the oil dipstick guide.

5. **REMOVE OIL COOLER AND OIL COOLER COVER ASSEMBLY**
   Remove the thirteen bolts, two nuts, oil cooler and oil cooler assembly and gasket.

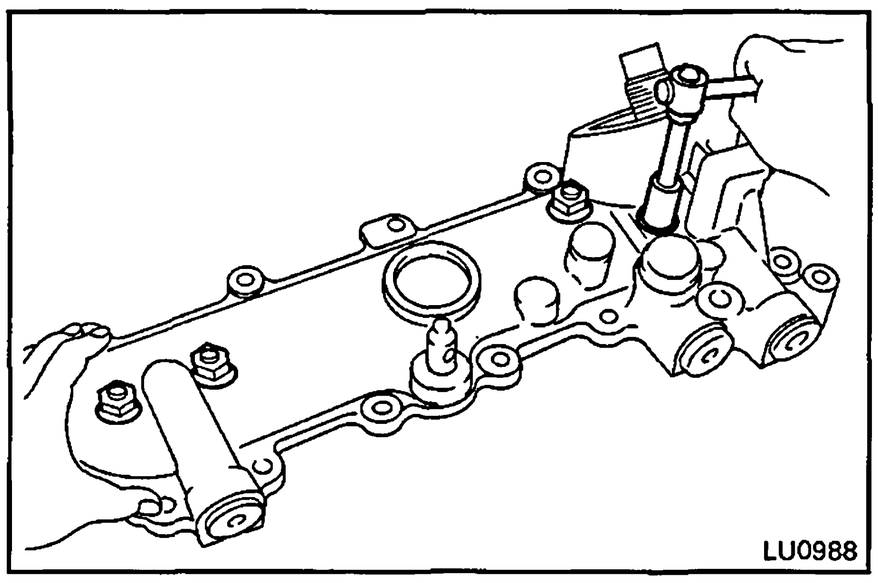

6. **SEPARATE OIL COOLER AND OIL COOLER COVER**
   Remove the four nuts, oil cooler and two gaskets from the oil cooler cover.

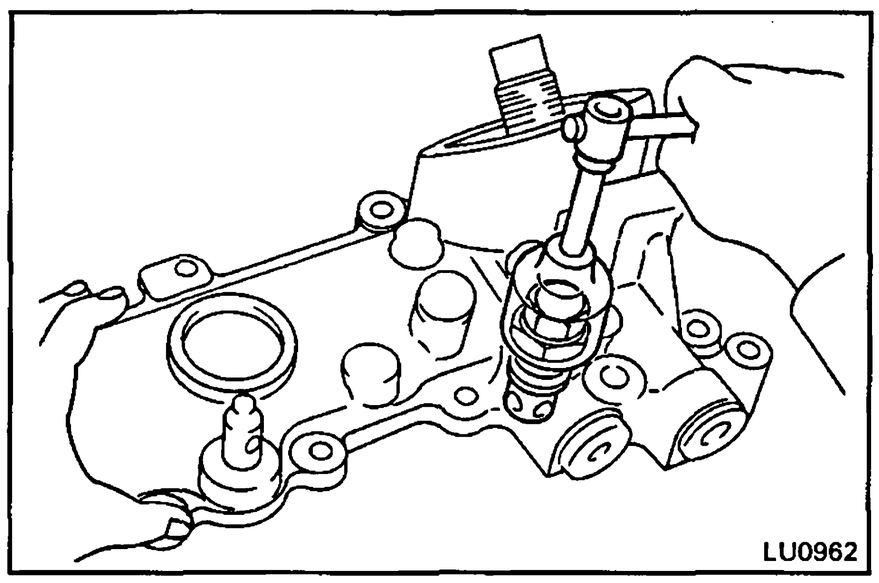

7. **REMOVE RELIEF VALVE**
   Remove the relief valve and gasket.

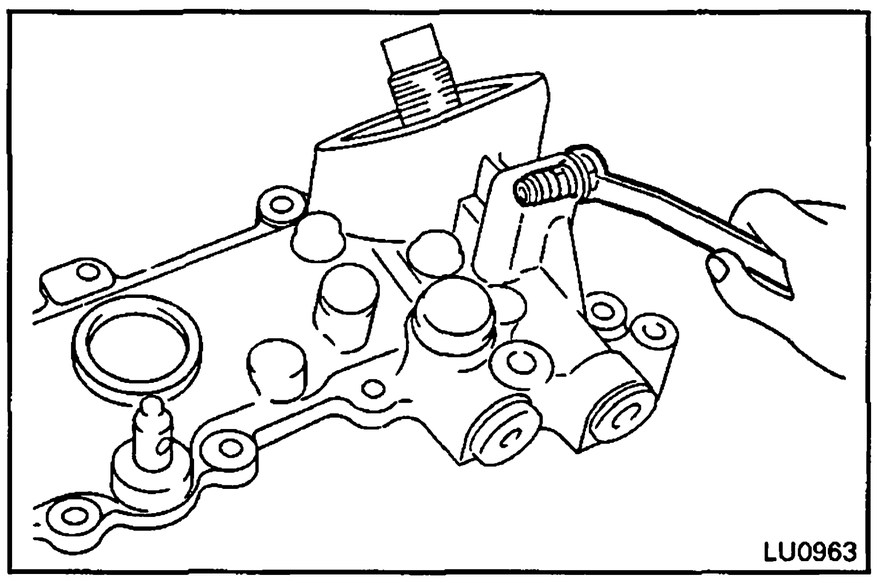

8. **REMOVE CHECK VALVE**
   Remove the check valve and gasket.

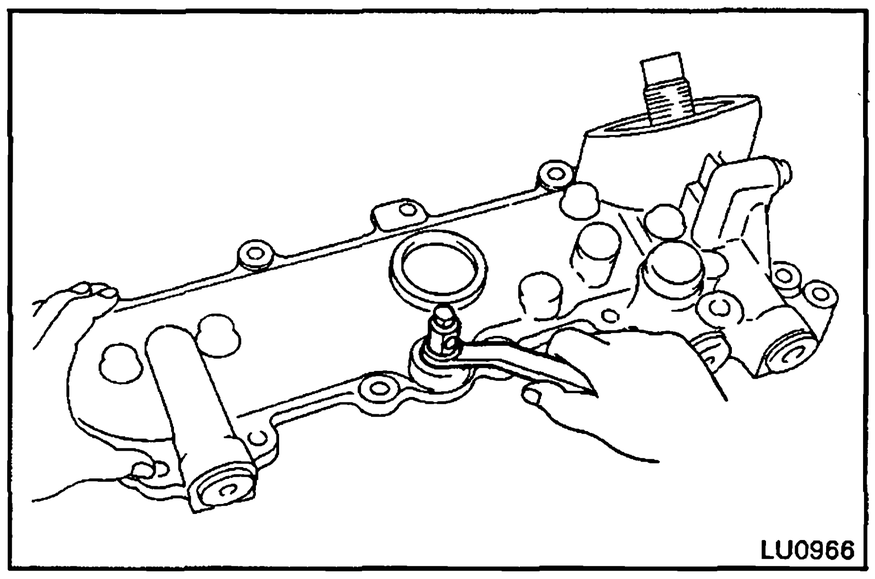

9. REMOVE ENGINE DRAIN COCK

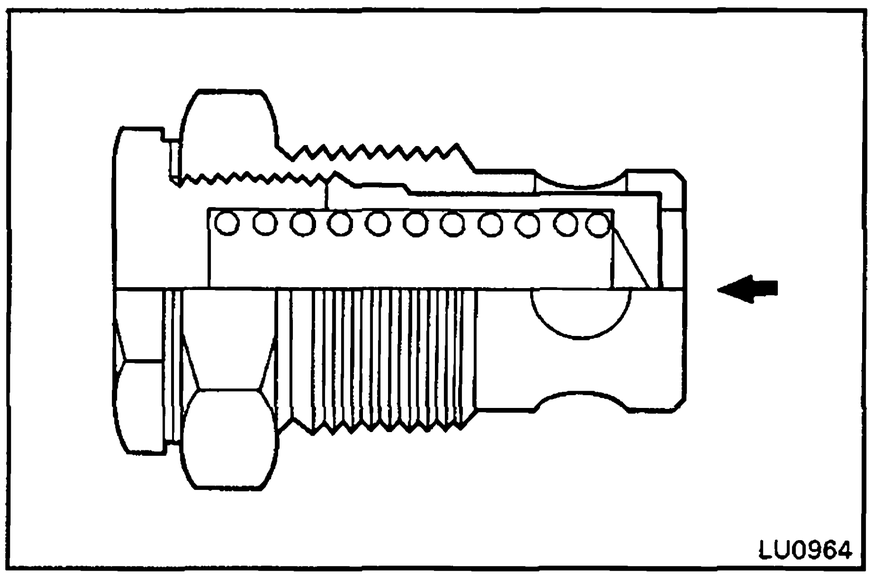

INSPECTION OF OIL COOLER, RELIEF VALVE AND CHECK VALVE

1. INSPECT RELIEF VALVE

Push the valve with a wooden stick to check if it is stuck.
If stuck, replace the relief valve.

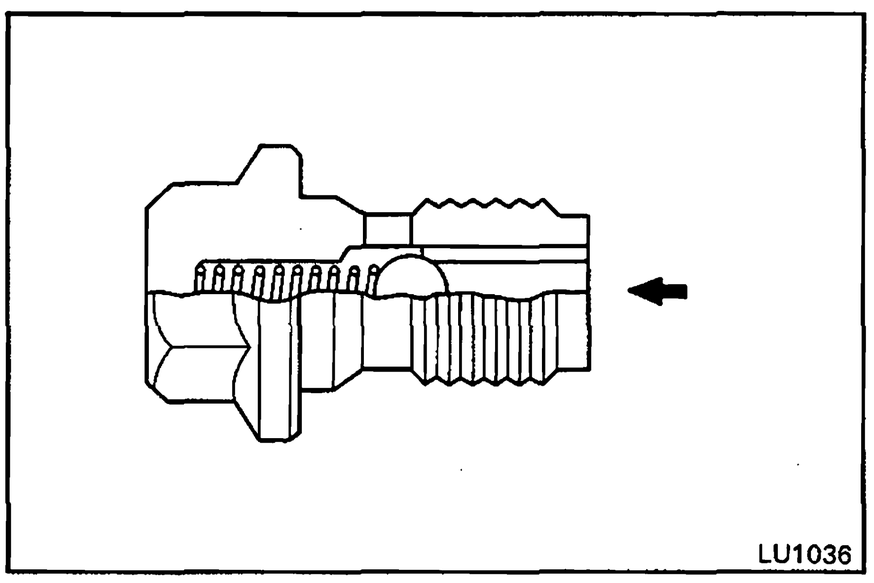

2. INSPECT CHECK VALVE

Push the valve with a wooden stick to check if it is stuck.
If stuck, replace the check valve.

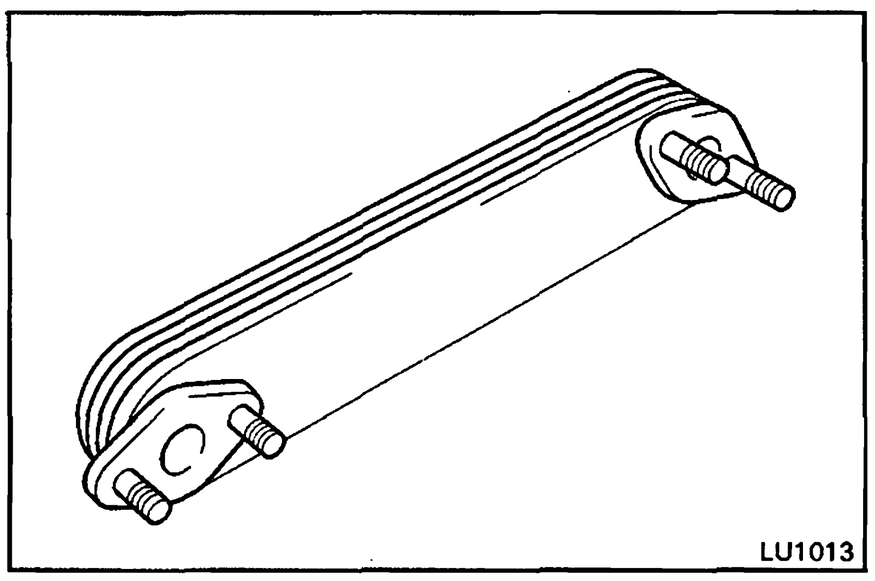

3. INSPECT OIL COOLER

Check the oil cooler for damage or clogging.
If necessary, replace the oil cooler.

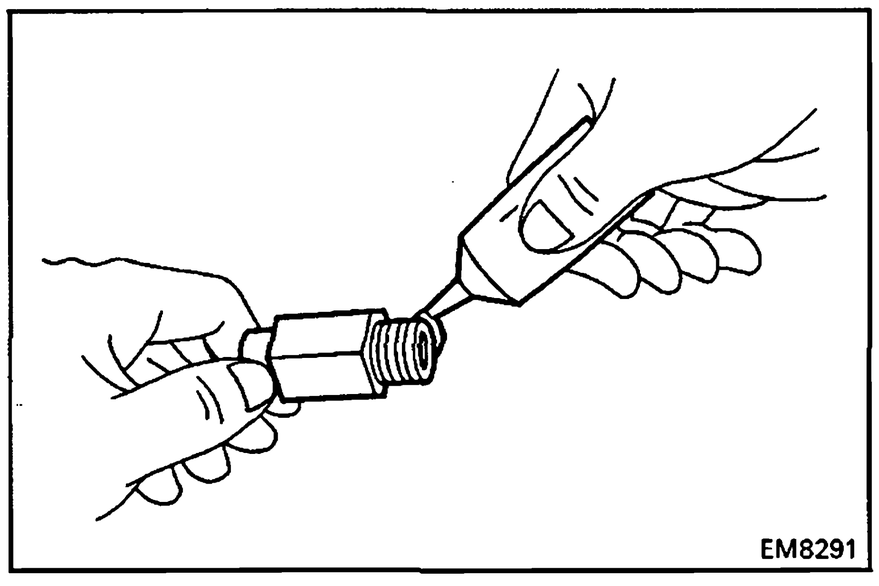

INSTALLATION OF OIL COOLER, RELIEF VALVE AND CHECK VALVE

(See page LU-15)

1. INSTALL ENGINE DRAIN COCK

(a) Apply adhesive to two or three threads of the drain cock.

Adhesive: Part No. 08833-00070, THREE BOND 1324 or equivalent

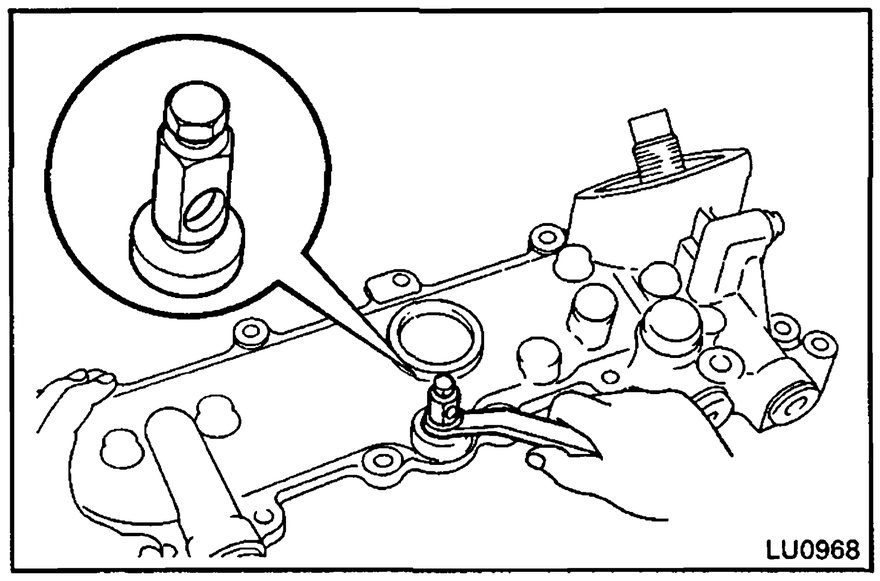

(b) Install and torque the drain cock as shown.

Torque: 200 kg-cm (14 ft-lb, 20 N·m)

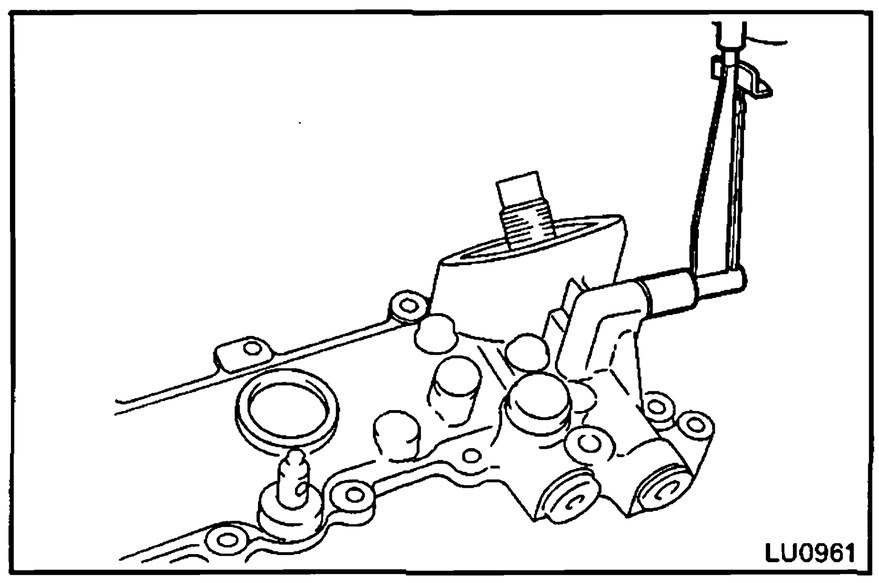

2. INSTALL CHECK VALVE

Install the check valve with a new gasket.

Torque: 275 kg-cm (20 ft-lb, 27 N·m)

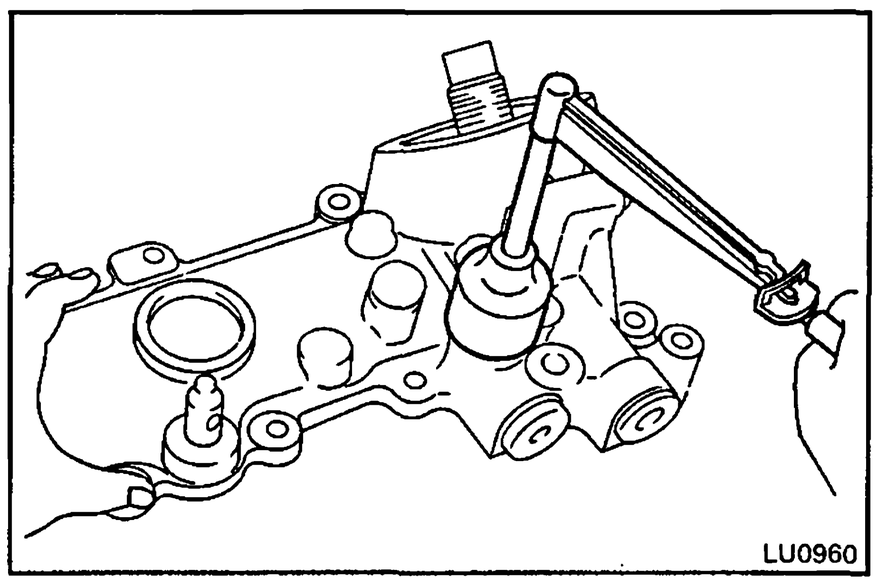

3. INSTALL RELIEF VALVE

Install the relief valve with a new gasket.

Torque: 400 kg-cm (29 ft-lb, 39 N·m)

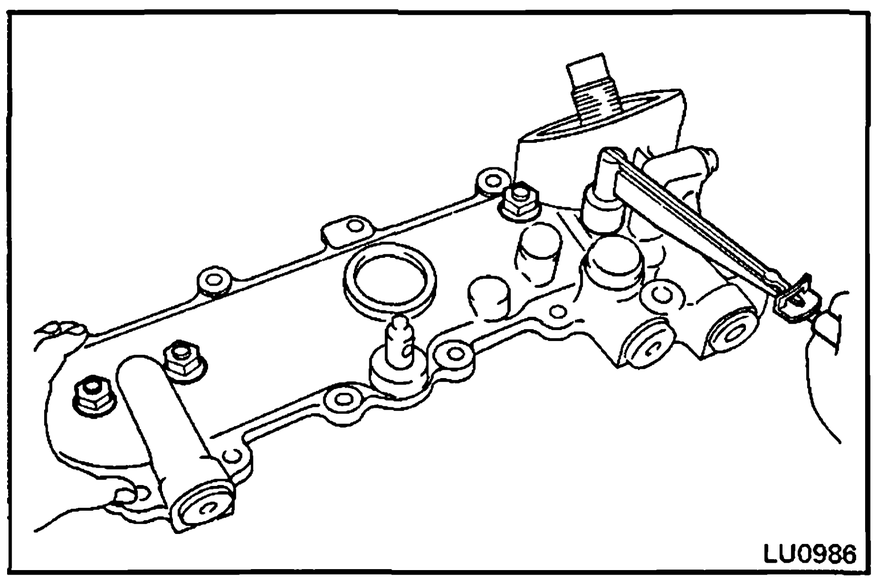

4. ASSEMBLE OIL COOLER AND OIL COOLER COVER

Install two new gaskets and the oil cooler to the oil cooler cover with the four nuts.

Torque: 200 kg-cm (14 ft-lb, 20 N·m)

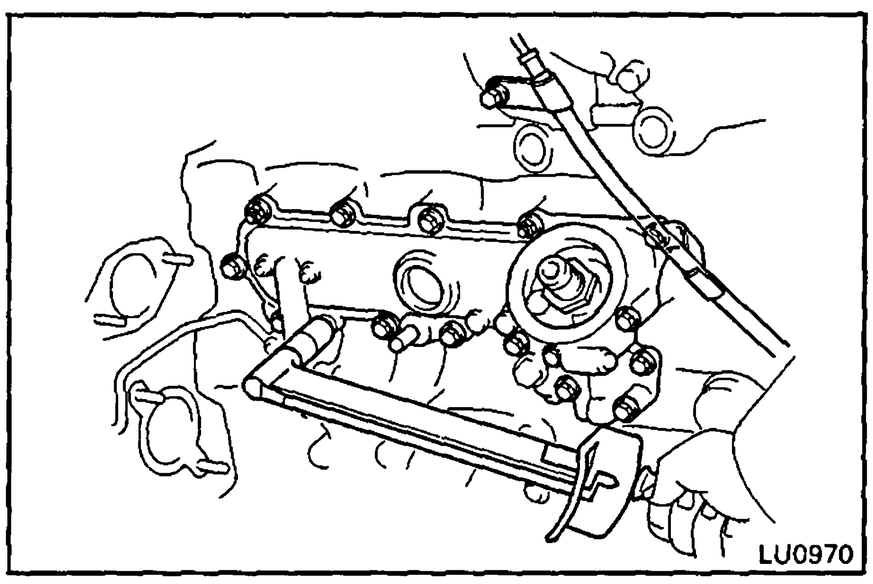

5. **INSTALL OIL COOLER AND OIL COOLER COVER ASSEMBLY**

   Install a new gasket, the oil cooler and oil cooler cover assembly with the thirteen bolts and two nuts.

   Torque: 200 kg-cm (14 ft-lb, 20 N·m)

6. **INSTALL OIL DIPSTICK GUIDE AND DIPSTICK**

   (a) Install a new O-ring to the oil dipstick guide.

   (b) Apply engine oil to the new O-ring.

   (c) Install the oil dipstick and guide with the two bolts.

   Torque:

   Intake manifold side
   200 kg-cm (14 ft-lb, 20 N·m)
   Oil cooler cover side
   200 kg-cm (14 ft-lb, 20 N·m)

7. **INSTALL INJECTION PUMP**
   (See page FU-93)

8. **INSTALL OIL FILTER (See page LU-6)**

9. **FILL WITH ENGINE COOLANT (See page CO-5)**

10. **START ENGINE AND CHECK FOR LEAKS**

11. **CHECK ENGINE OIL (See page LU-5)**

OIL NOZZLES AND CHECK VALVES

COMPONENTS

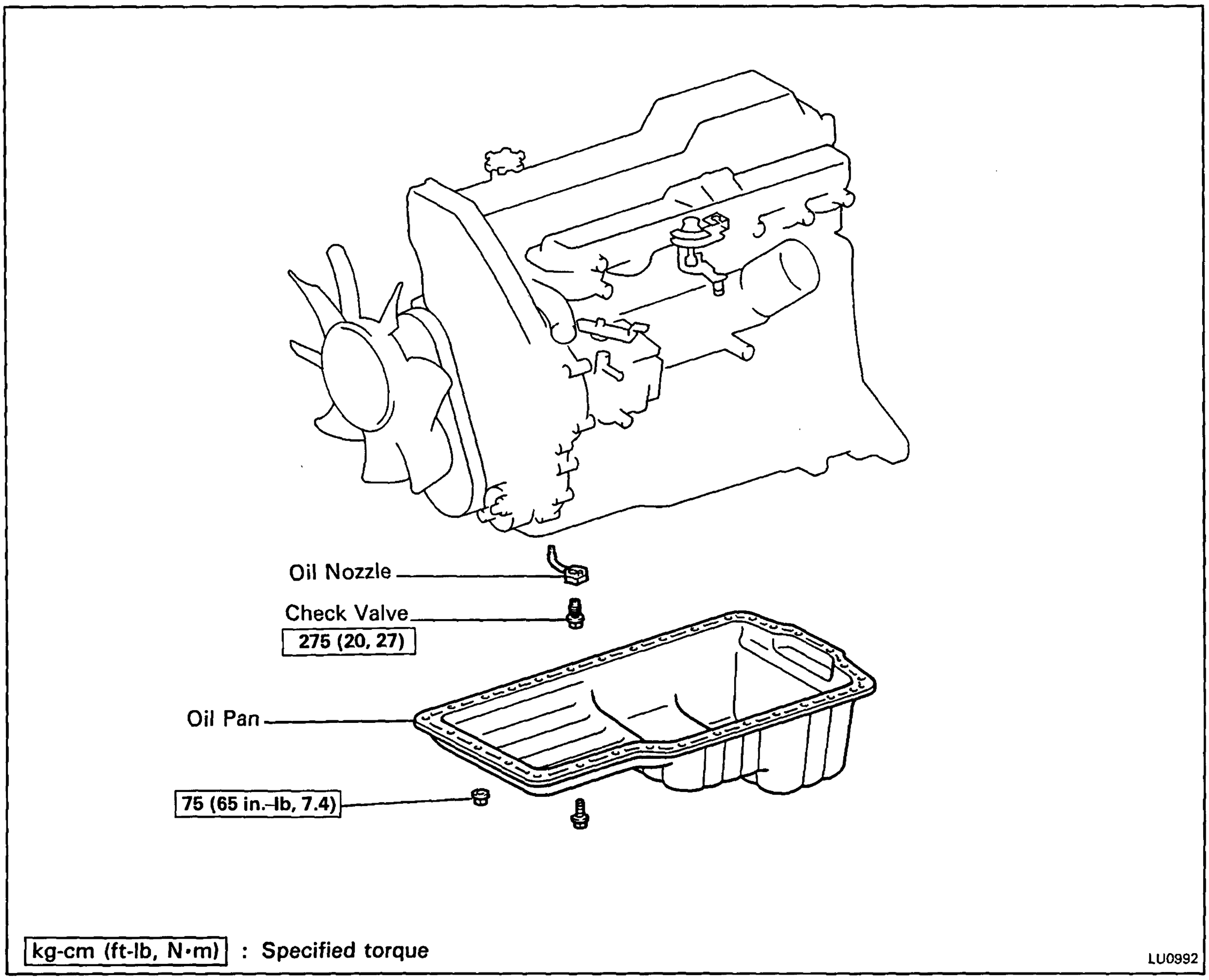

REMOVAL OF OIL NOZZLES AND CHECK VALVES

1. **DRAIN ENGINE OIL (See page LU-6)**

2. **REMOVE OIL PAN (See step 4 on page LU-9)**

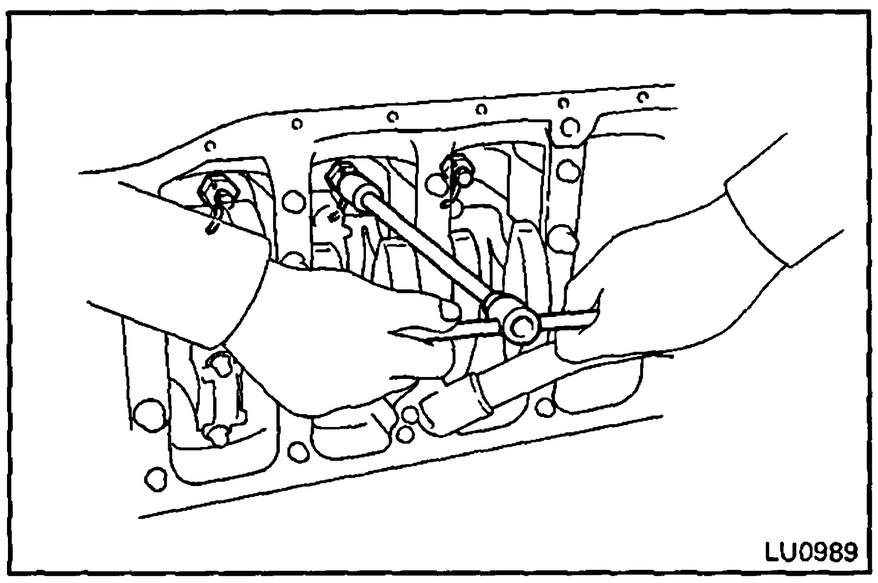

3. **REMOVE CHECK VALVE AND OIL NOZZLES**

   Remove the five (1PZ) or six (1HZ and 1HD-T) check valves and oil nozzles.

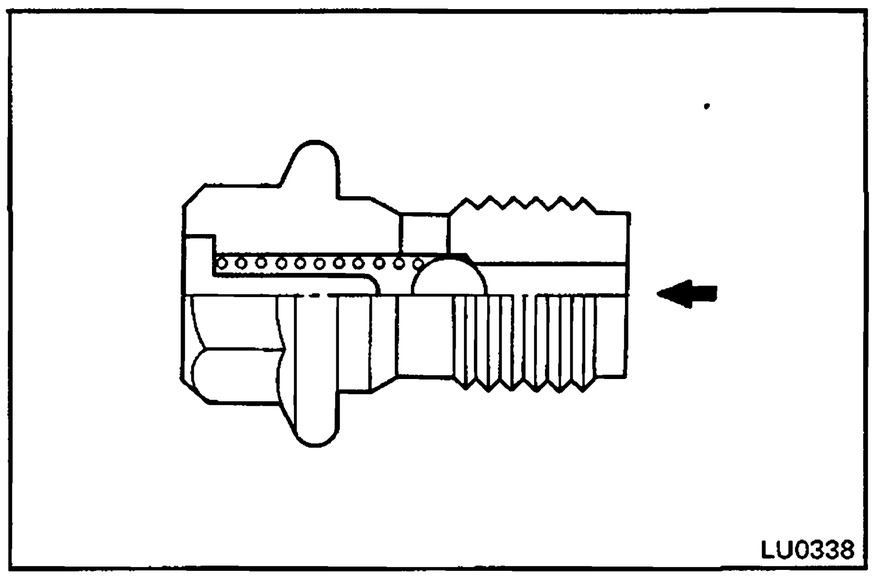

INSPECTION OF OIL NOZZLES AND CHECK VALVES

1. INSPECT CHECK VALVES

Push the valve with a wooden stick to check if it is stuck.

If stuck, replace the check valve.

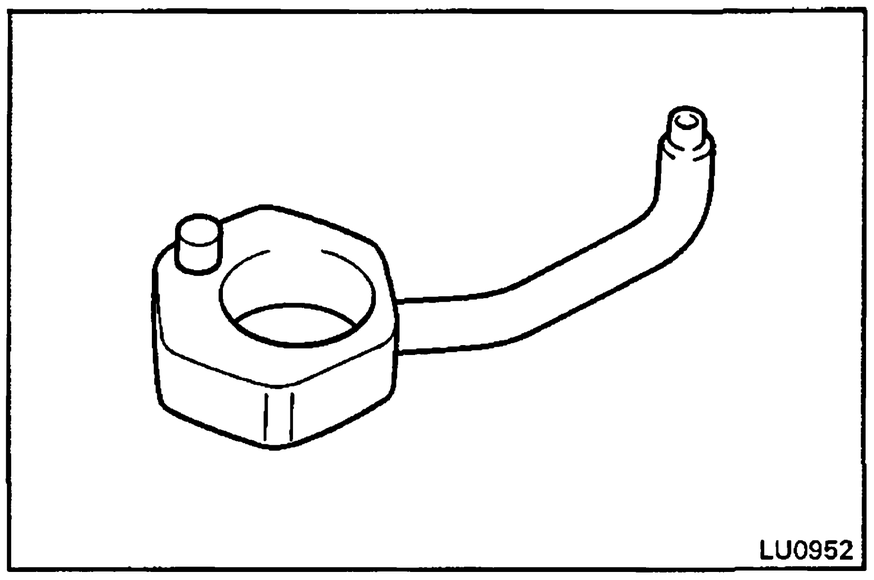

2. INSPECT OIL NOZZLES

Check the oil nozzles for damage or clogging.

If necessary, replace the oil nozzle.

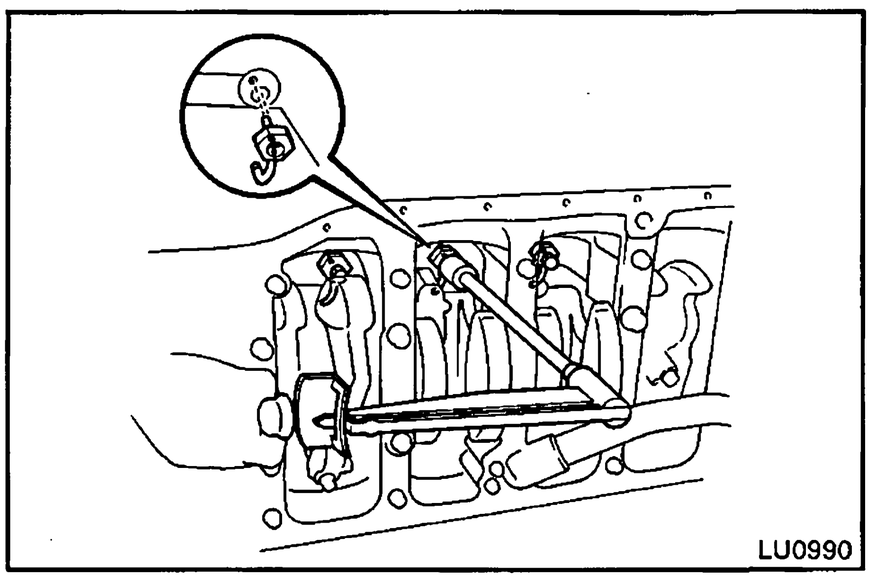

INSTALLATION OF OIL NOZZLES AND CHECK VALVES

(See page LU-20)

1. INSTALL OIL NOZZLES AND CHECK VALVES

(a) Align the pin of the oil nozzle with the pin hole of the cylinder block.

(b) Install the oil nozzle with the check valve. Install the five (1PZ) or six (1HZ and 1HD-T) oil nozzles and check valves.

Torque: 275 kg-cm (20 ft-lb, 27 N·m)

2. INSTALL OIL PAN

(See step 4 on page LU-14)

3. FILL WITH ENGINE OIL (See page LU-7)

4. START ENGINE AND CHECK FOR LEAKS

STARTING SYSTEM

	Page
PRE-HEATING SYSTEM	ST-2
Super Glow Type (Europe and Australia)	ST-2
Fixed Delay Type (HZJ80 and HDJ80) ex. (Europe and Australia)	ST-9
Fixed Delay Type (PZJ, HZJ75, HZB and HDB) ex. (Europe and Australia)	ST-11
TROUBLESHOOTING	ST-13
STARTING SYSTEM CIRCUIT	ST-13
STARTER	ST-15
STARTER RELAY (PZJ, HZJ and HDJ)	ST-26
STARTER RELAY (HZB and HDB)	ST-27
VOLTAGE CONVERTER TIMER (HZJ80 and HDJ80) (w/ 24 V Starter)	ST-28
VOLTAGE CONVERTER RELAY (HZJ80 and HDJ80) (w/ 24 V Starter)	ST-29
24 V HOLD WARNING RELAY (HZJ80 and HDJ80) (w/ 24 V Starter)	ST-30

PRE-HEATING SYSTEM

Super Glow Type (Europe and Australia)

SYSTEM CIRCUIT

PZJ 70, 73, 75 and HZJ 70, 73, 75

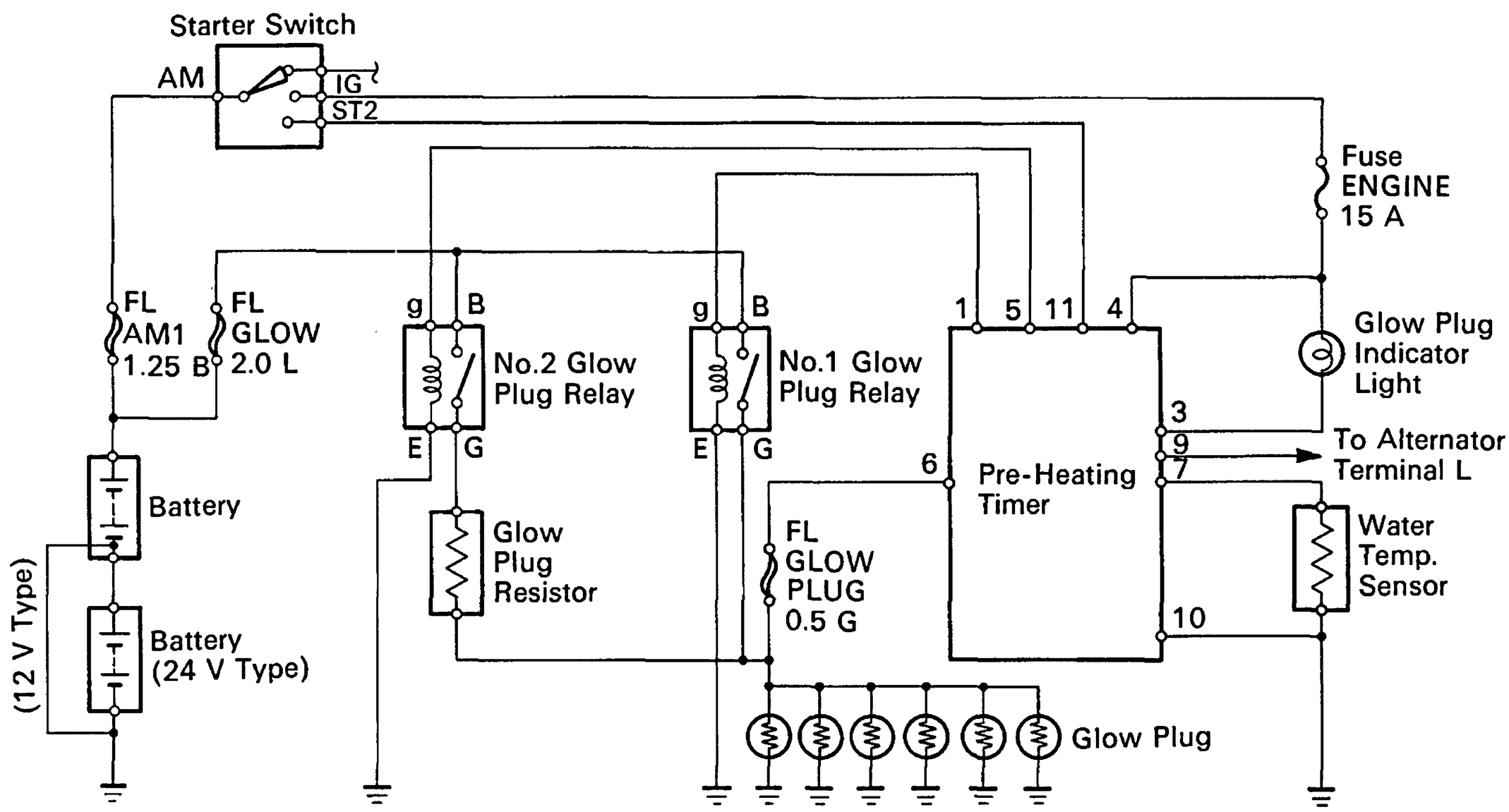

HZJ 80 and HDJ 80

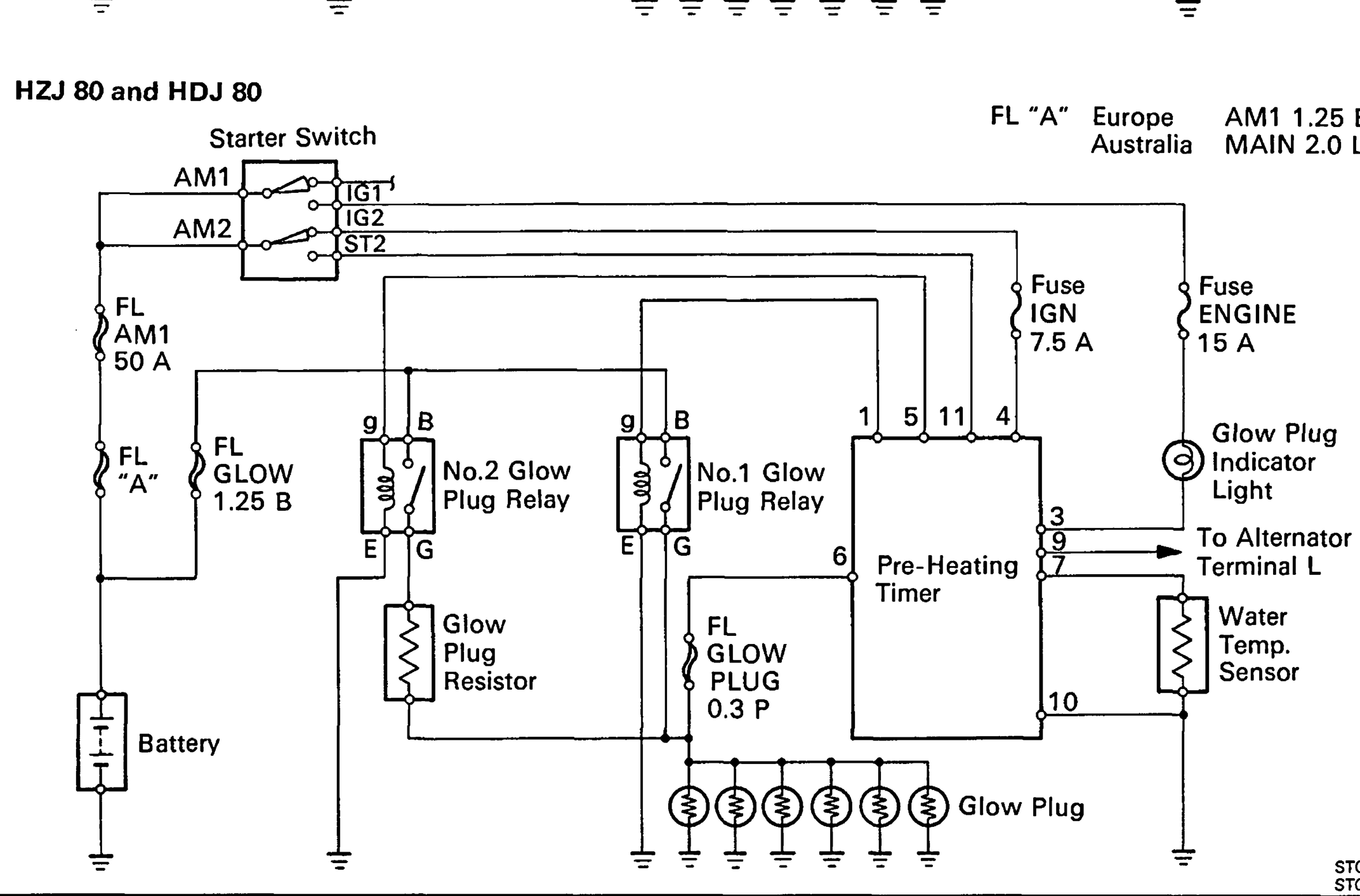

SYSTEM CIRCUIT (Cont'd)

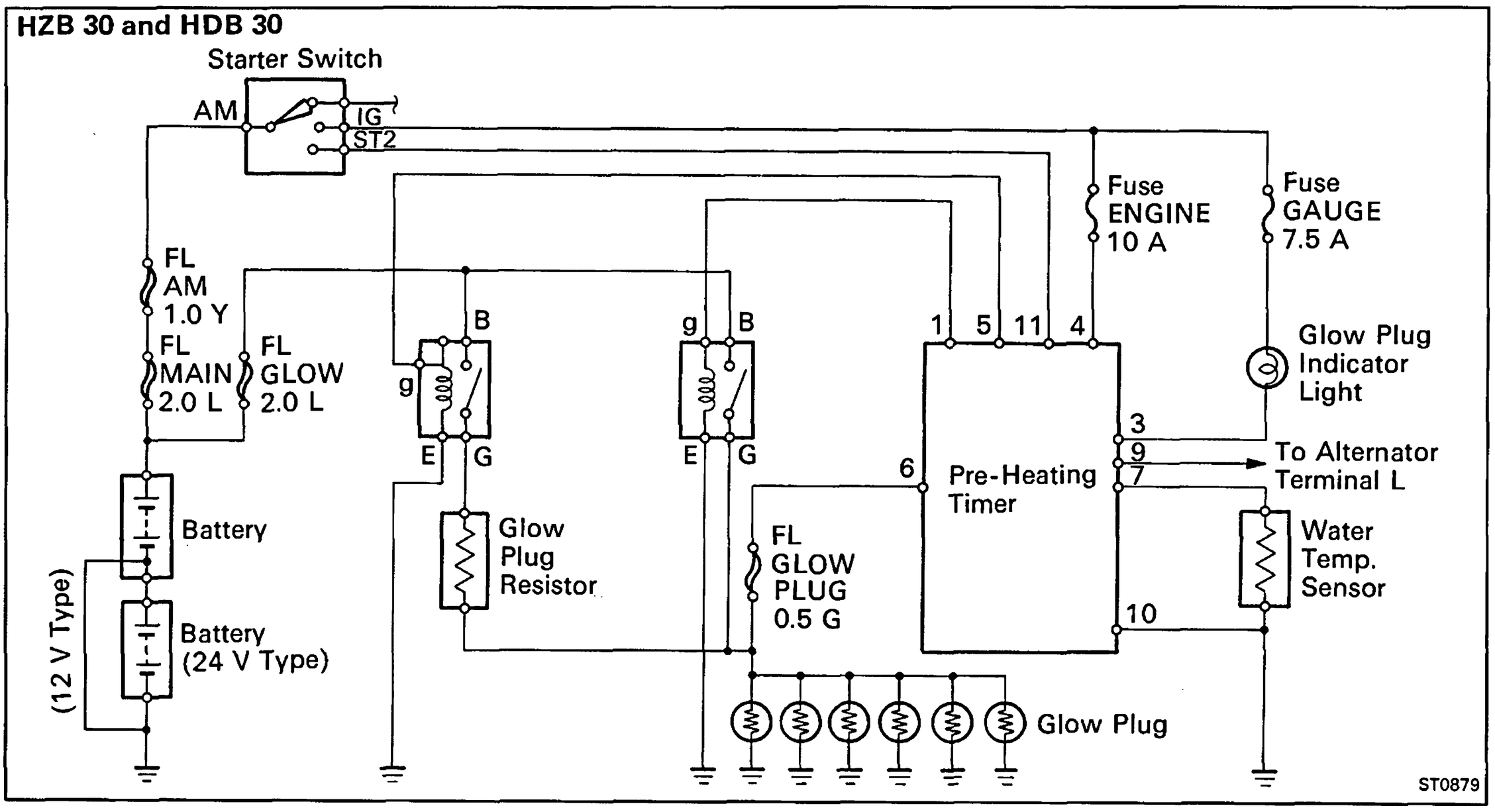

INSPECTION OF PRE-HEATING SYSTEM

HINT: Refer to Diesel Electrical System Diagnosis for inspection procedures. (See page EM-14)

TIMER CHARACTERISTIC DIAGRAM

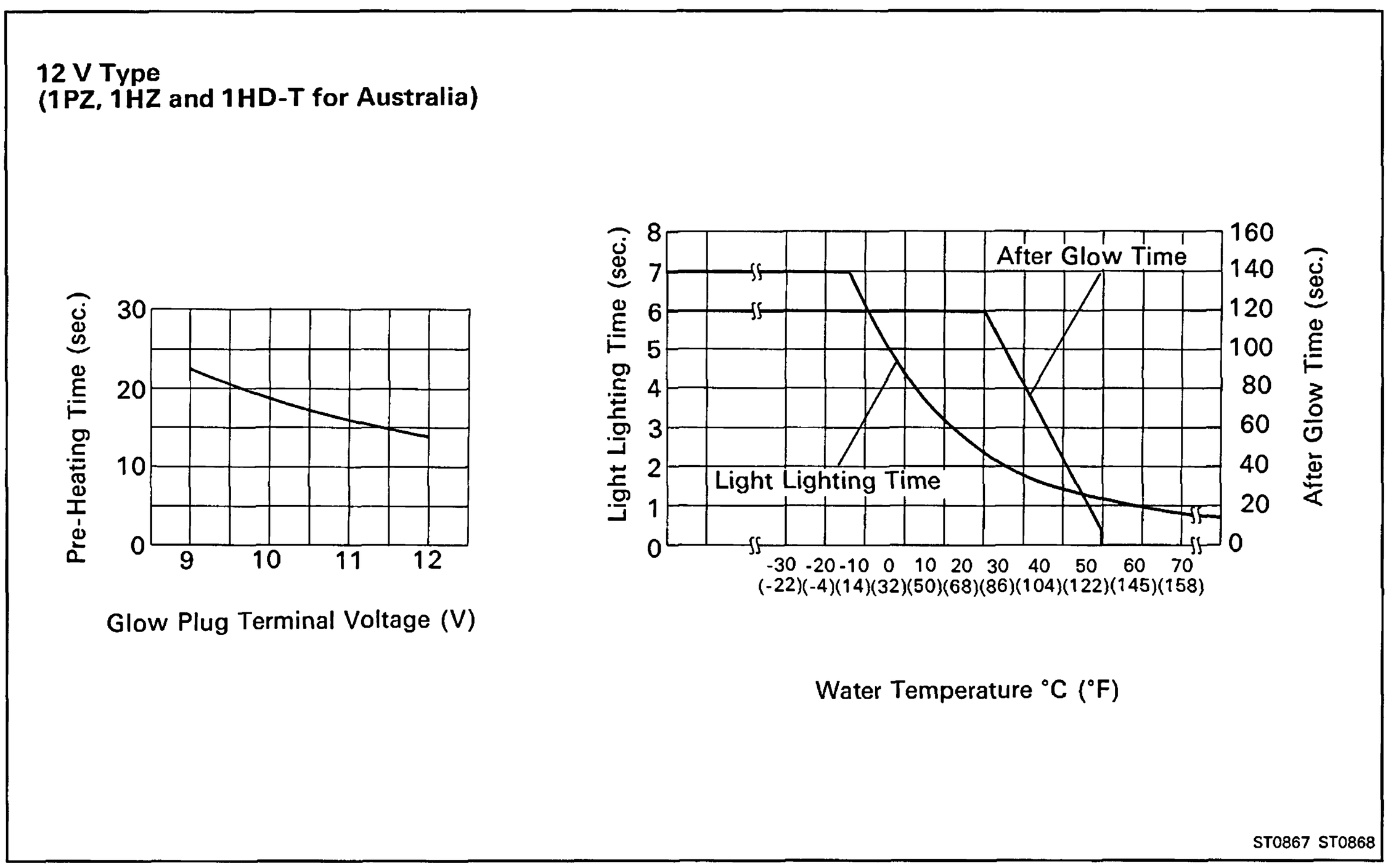

TIMER CHARACTERISTIC DIAGRAM (Cont'd)

(1HZ for Europe)

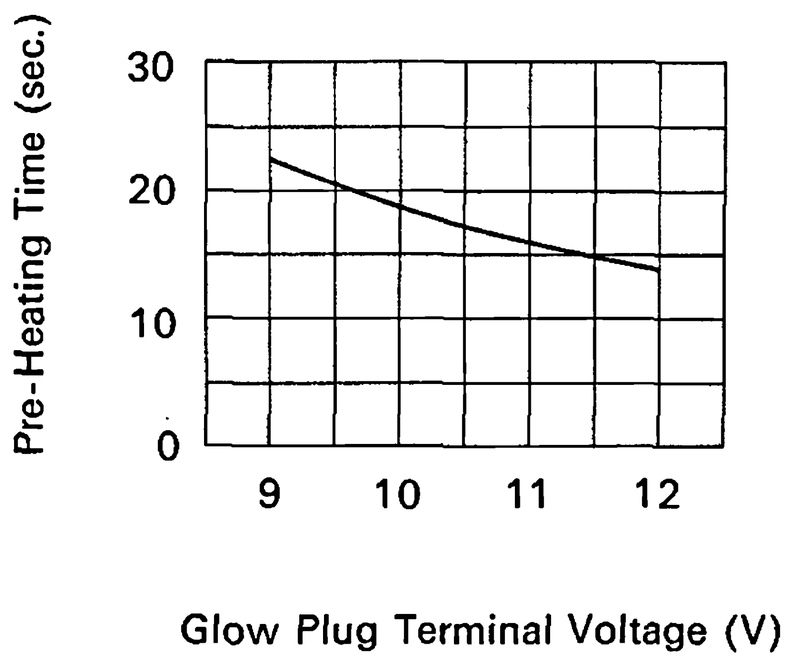

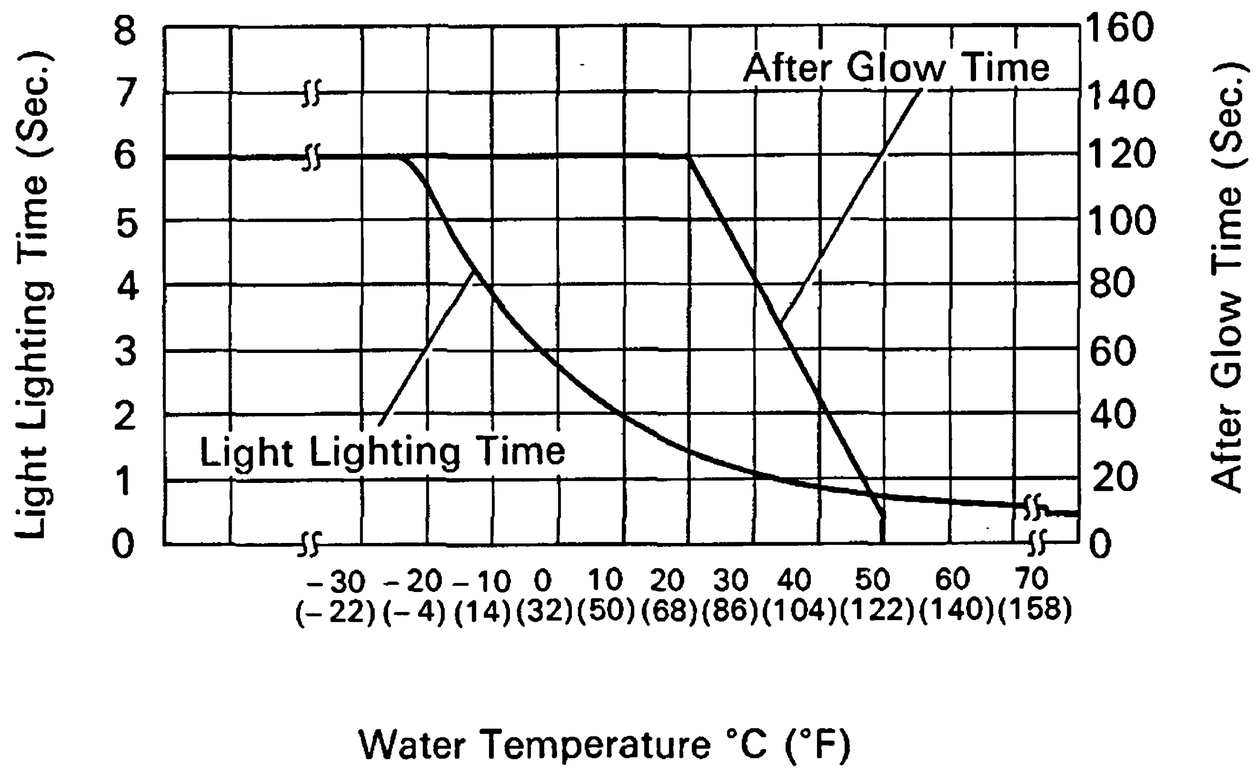

(1HD-T for Europe)

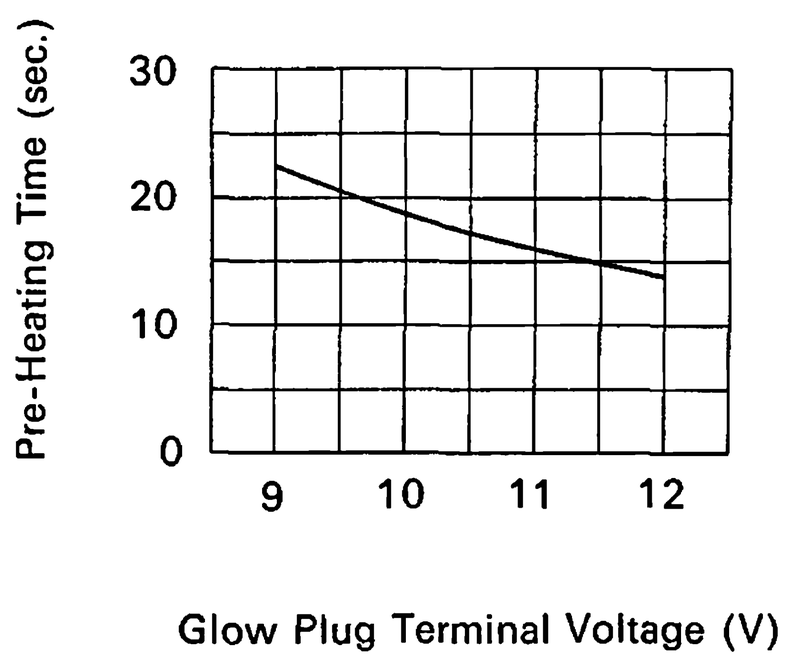

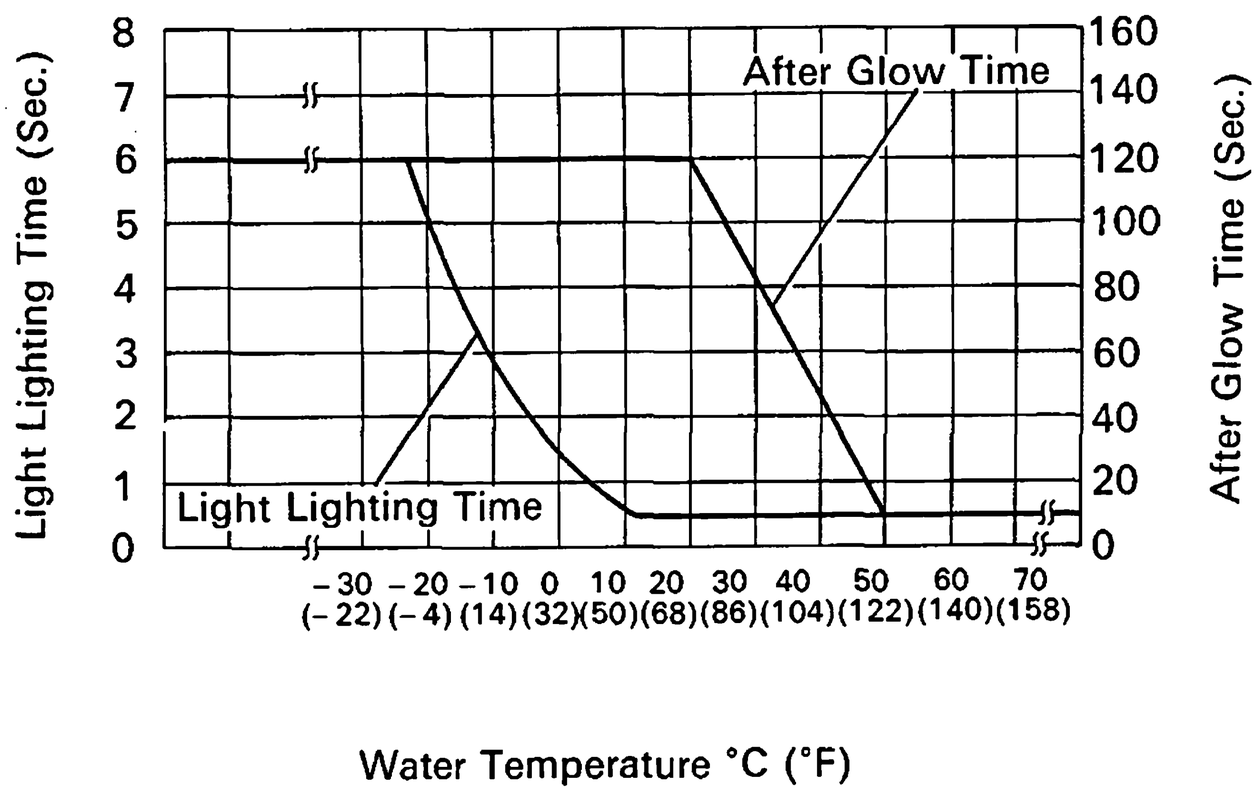

24 V Type

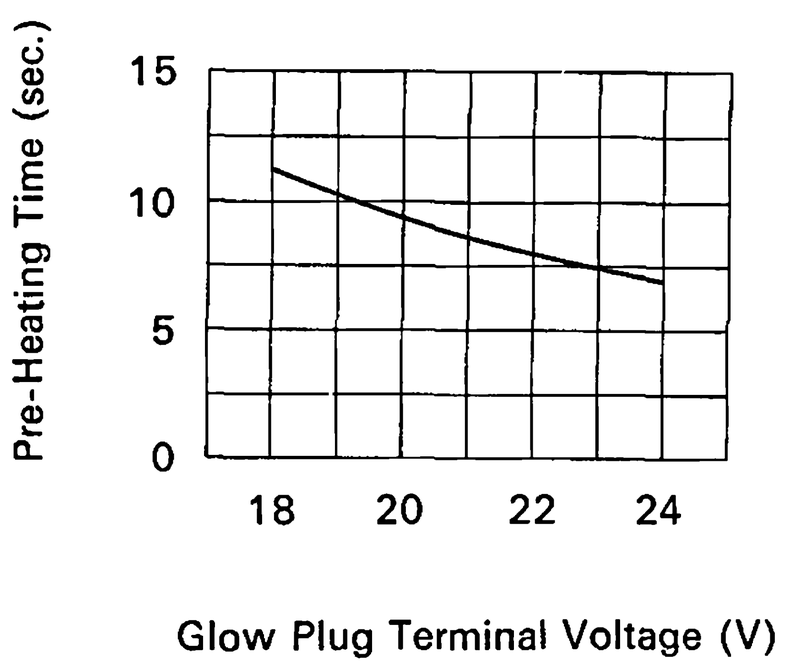

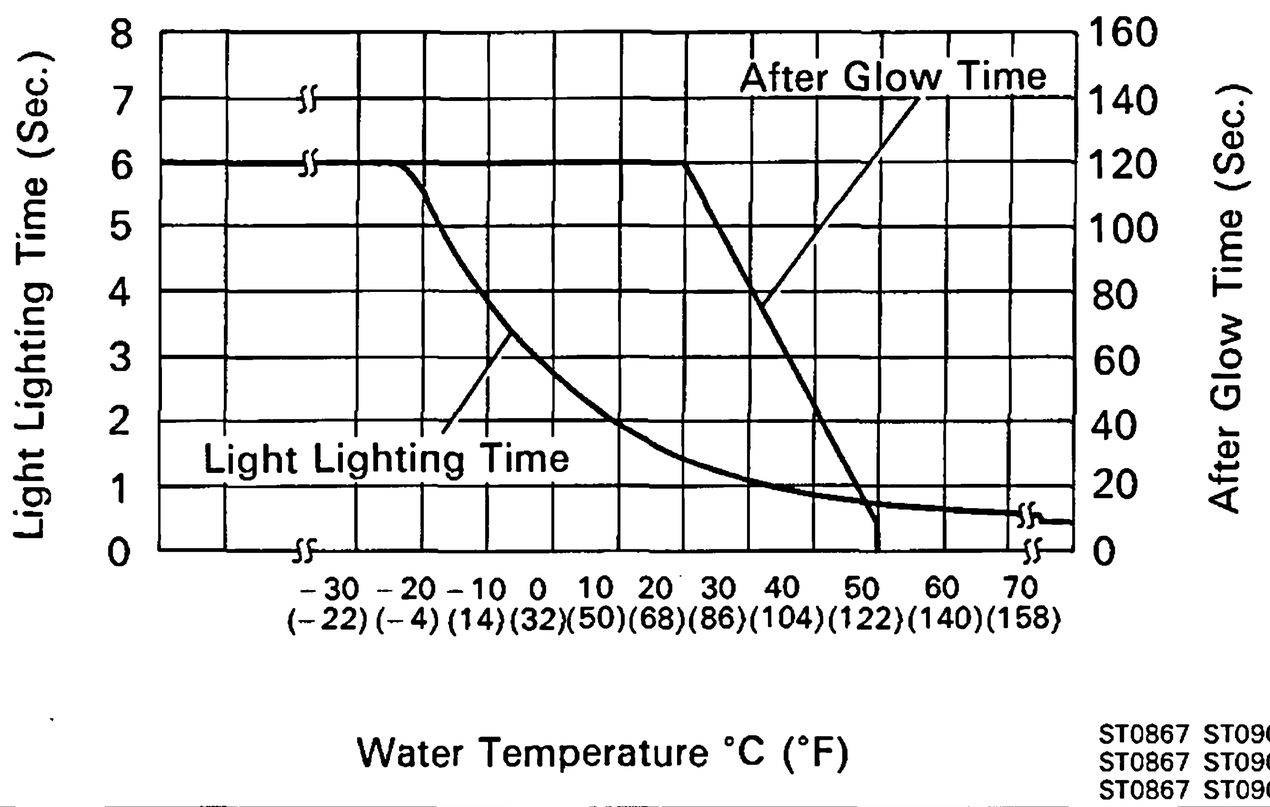

ST0867 ST0900
ST0867 ST0901
ST0867 ST0900

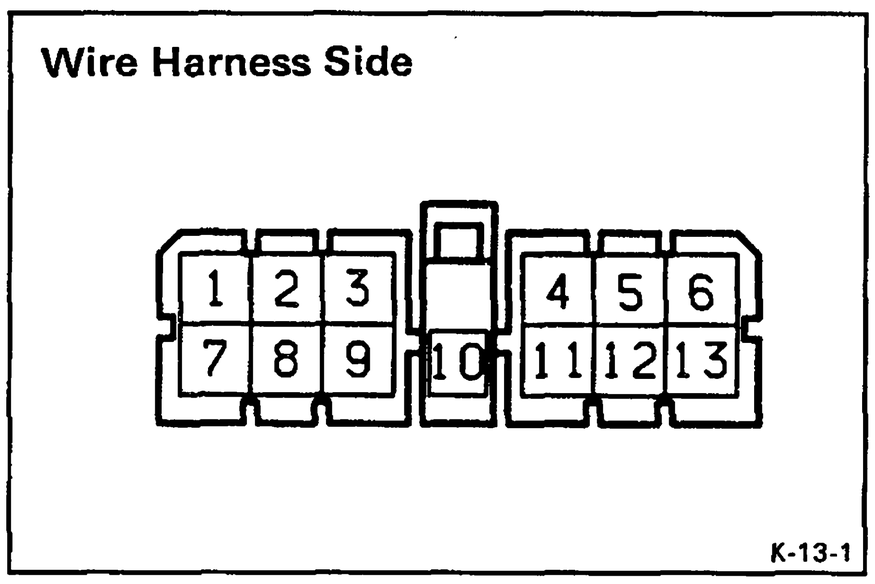

INSPECTION OF COMPONENTS

Pre-Heating Timer

LOCATION:

PZJ, HZJ, HDJ	Under the instrument panel on the passenger side.
HZB, HDB	Under the instrument panel center.

INSPECT PRE-HEATING TIMER CIRCUIT

Disconnect the connector from the pre-heating timer, and check the connector on the wire harness side as shown in the following chart.

Check for	Tester connection	Condition	Specified value
Continuity	1 – Ground	–	Continuity
Voltage	3 – Ground	Turn starter switch OFF	No voltage
		Turn starter switch ON	Battery voltage
Voltage	4 – Ground	Turn starter switch OFF	No voltage
		Turn starter switch ON	Battery voltage
Continuity	5 – Ground	–	Continuity
Continuity	6 – Ground	–	Continuity
Continuity	7 – Ground	–	Continuity
Continuity	10 – Ground	–	Continuity
Voltage	11 – Ground	Turn starter switch OFF	No voltage
		Turn starter switch START	Battery voltage

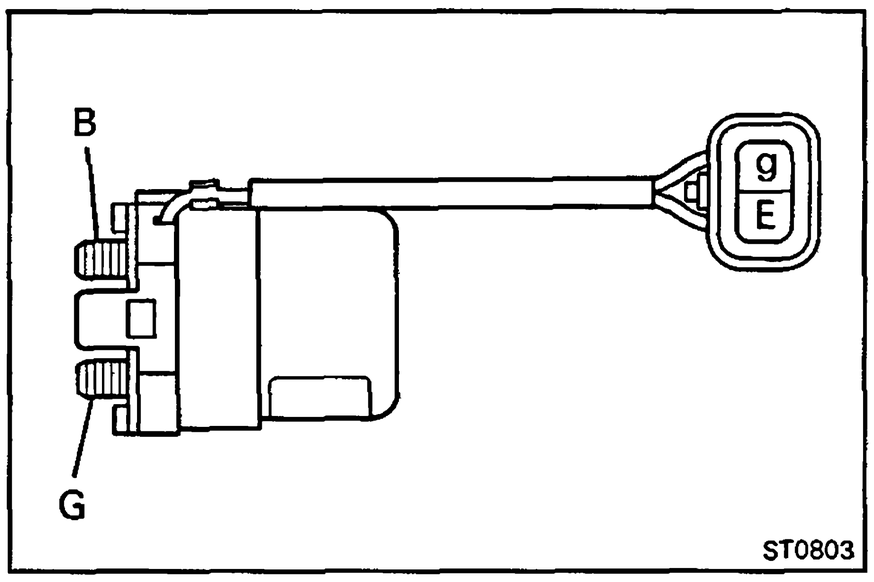

No. 1 Glow Plug Relay

LOCATION: In the engine compartment on the left side.

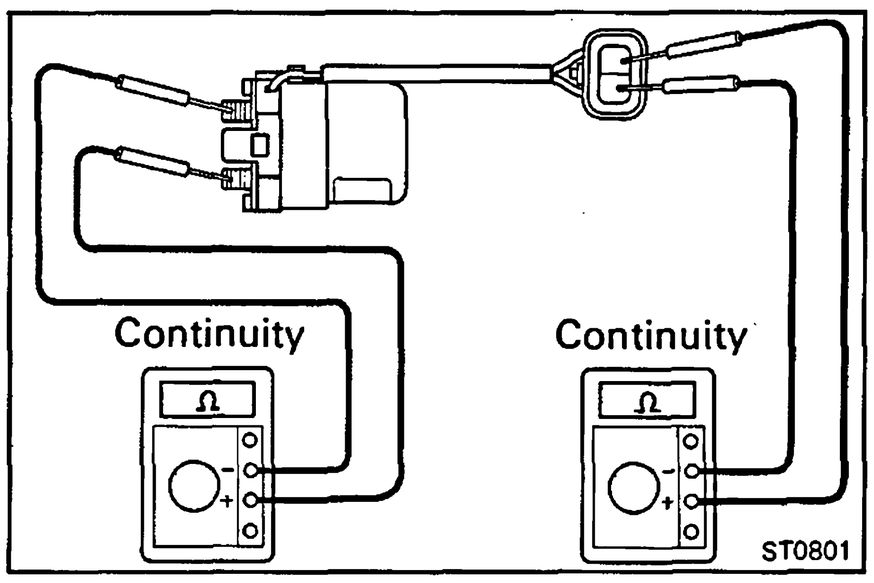

1. **INSPECT RELAY CONTINUITY**

   (a) Using an ohmmeter, check that there is continuity between terminals E and g.

   (b) Check that there is no continuity between terminals B and G.

   If continuity is not as specified, replace the relay.

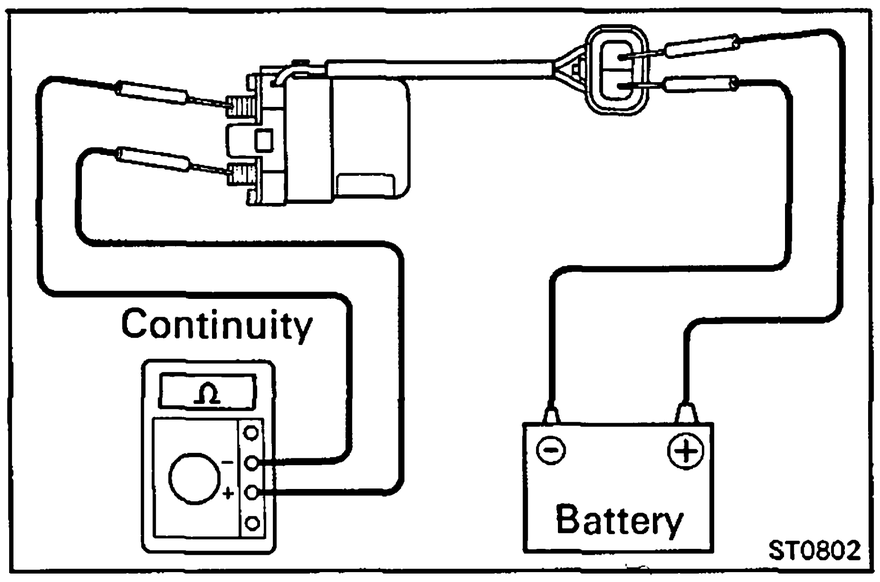

2. INSPECT RELAY OPERATION

(a) Apply battery voltage across terminals E and g.

(b) Using an ohmmeter, check that there is continuity between terminals B and G.

If operation is not as specified, replace the relay.

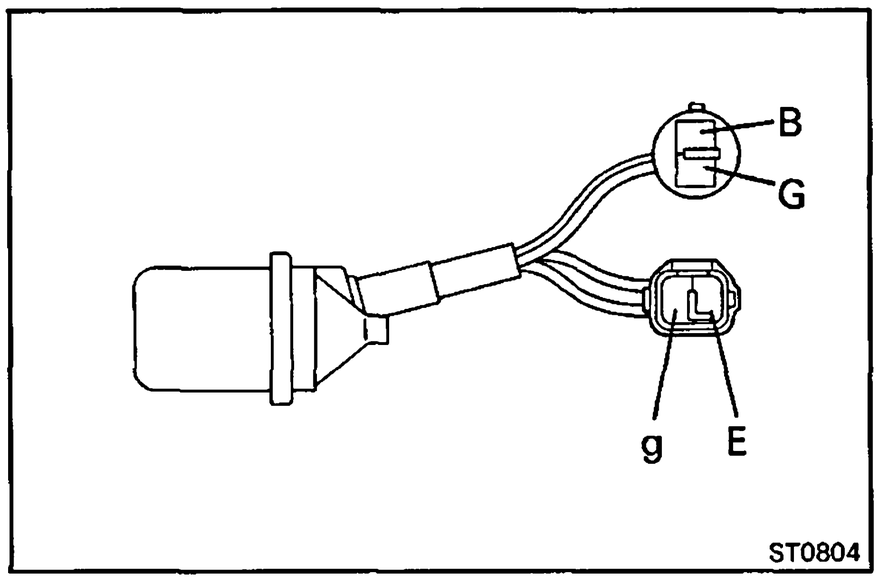

No.2 Glow Plug Relay (PZJ, HZJ and HDJ)

LOCATION: In the engine compartment on the left side.

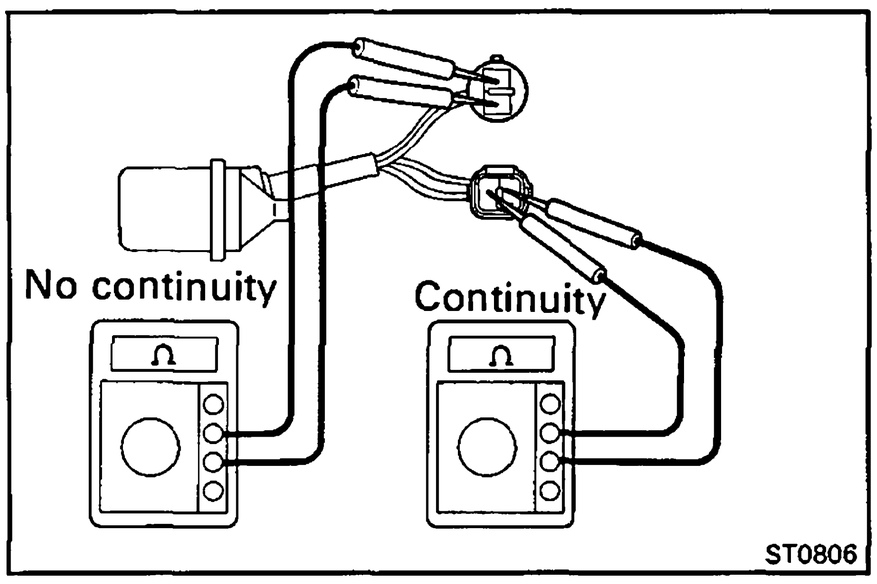

1. INSPECT RELAY CONTINUITY

(a) Using an ohmmeter, check that there is continuity between terminals E and g.

(b) Check that there is no continuity between terminals B and G.

If continuity is not as specified, replace the relay.

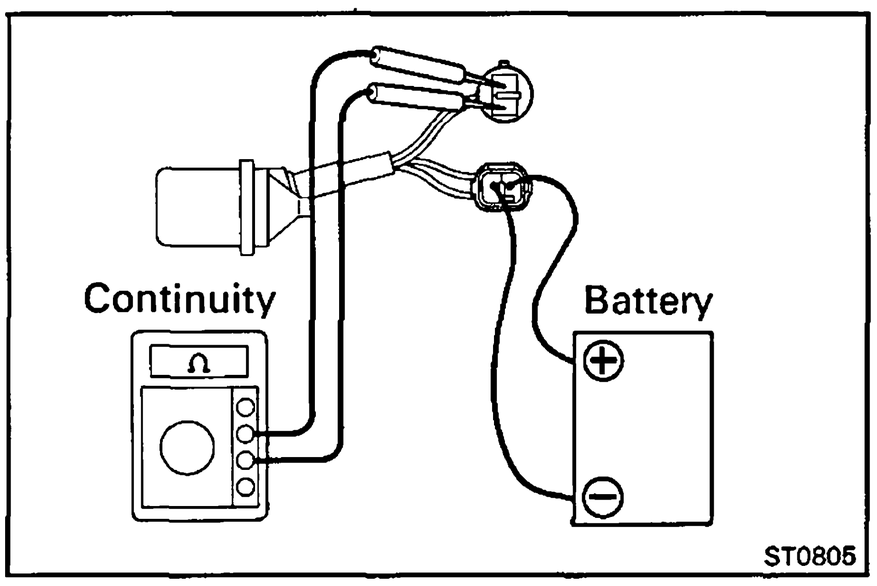

2. INSPECT RELAY OPERATION

(a) Apply battery voltage across terminals E and g.

(b) Using an ohmmeter, check that there is continuity between terminals B and G.

If operation is not as specified, replace the relay.

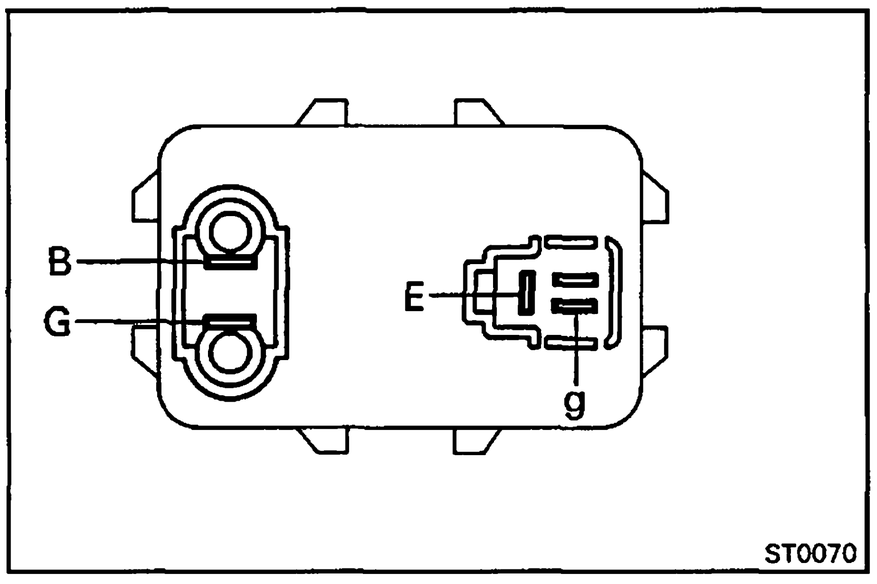

No.2 Glow Plug Relay (HZB and HDB)

LOCATION: Inside wall adjacent to center door.

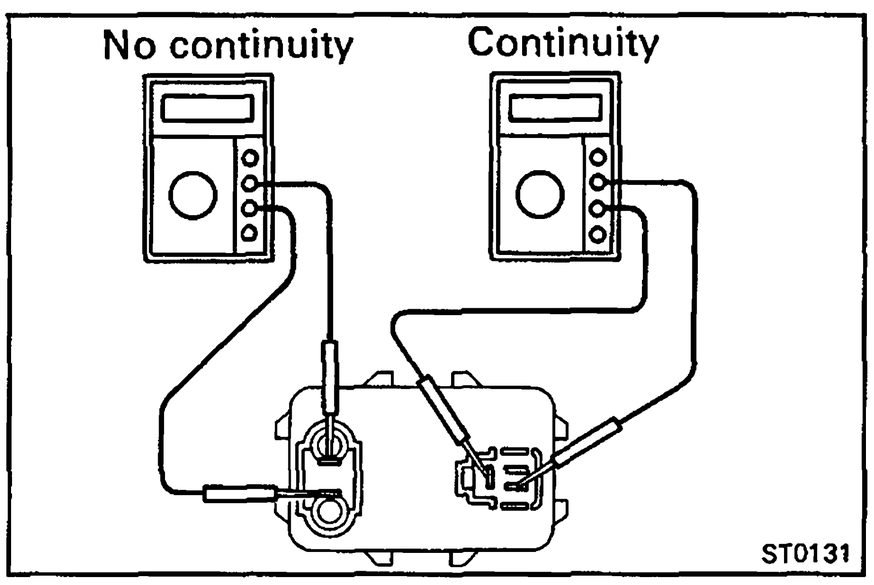

1. **INSPECT RELAY CONTINUITY**
   (a) Using an ohmmeter, check that there is continuity between terminals E and g.
   (b) Check that there is no continuity between terminals B and G.

   If continuity is not as specified, replace the relay.

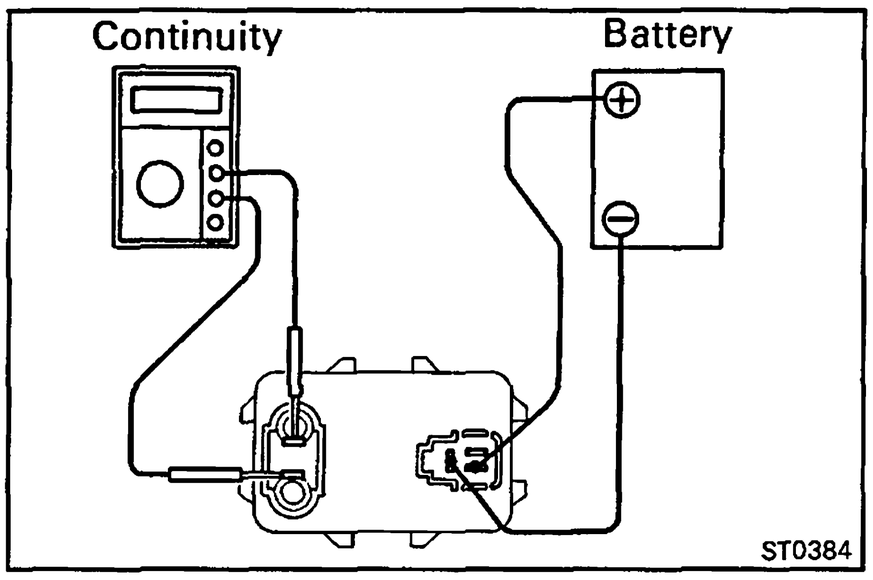

2. **INSPECT RELAY OPERATION**
   (a) Apply battery voltage across terminals E and g.
   (b) Using an ohmmeter, check that there is continuity between terminals B and G.

   If operation is not as specified, replace the relay.

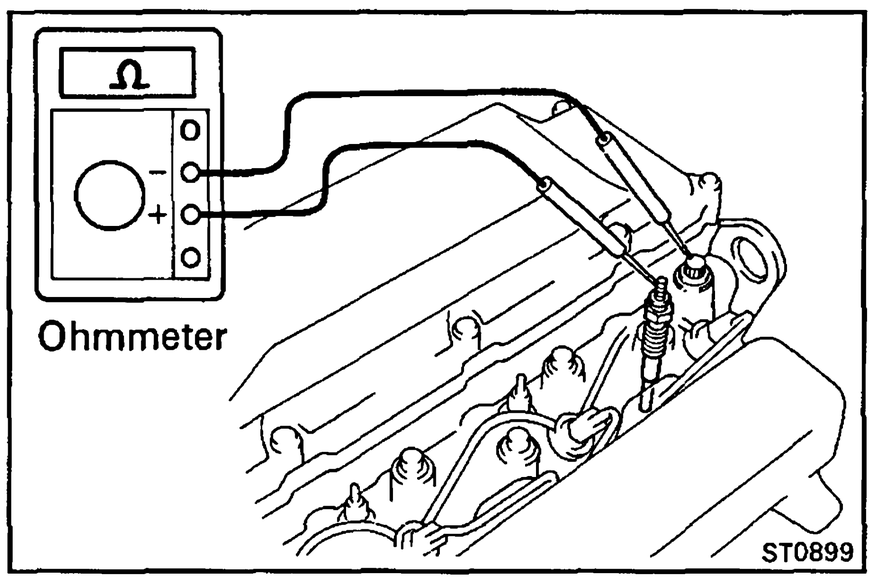

Glow Plug

INSPECT GLOW PLUG

Using an ohmmeter, check that there is continuity between the glow plug terminal and ground.

If there is no continuity, replace the glow plug.

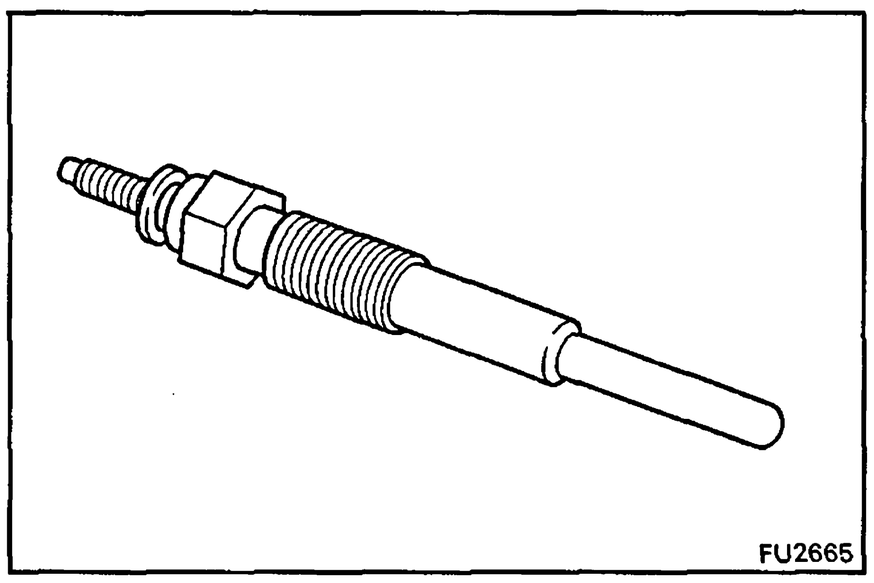

HINT:
- Be careful not to damage the glow plug pipes as it could cause an open circuit or shorten life of the plugs.
- Avoid getting oil and gasoline on the glow plug when cleaning.
- During inspection, be sure to wipe any oil off the glow plug terminal and bakelite washer with a dry cloth.
- Be careful not to apply more than 11 volts (12 V type) or 22 volts (24 v type) to the glow plug as it could cause an open circuit.

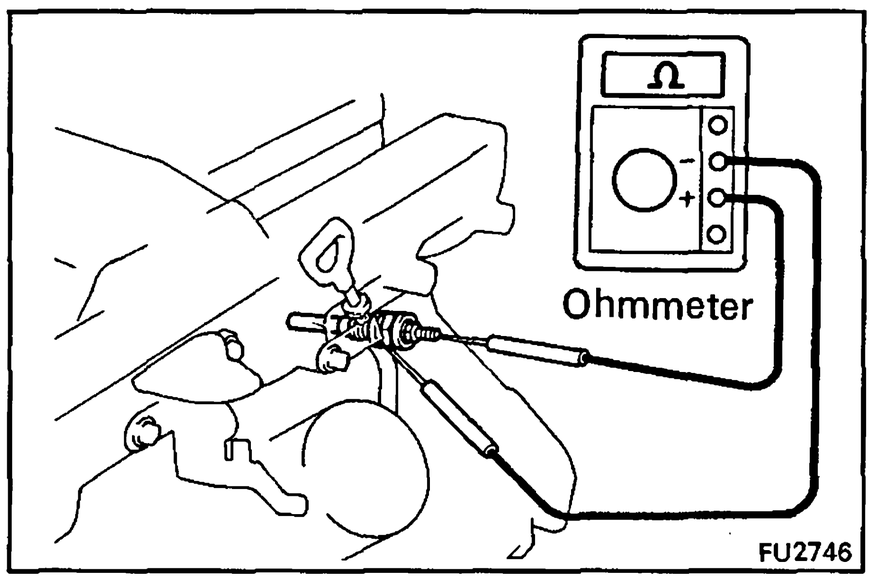

Glow Plug Resistor

INSPECT GLOW PLUG RESISTOR

Using an ohmmeter, check that there is continuity between the resistor terminals.

If there is no continuity, replace the resistor.

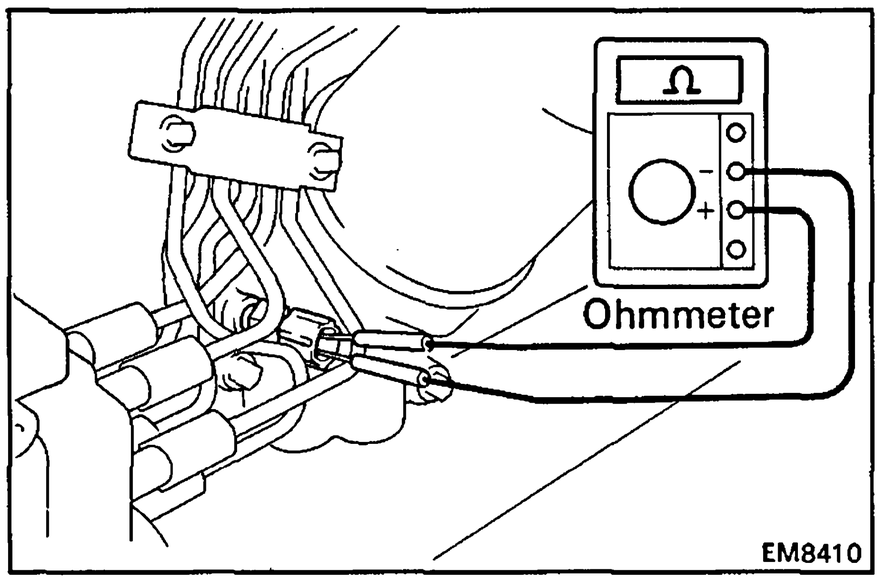

Water Temperature Sensor

INSPECT TEMPERATURE SENSOR

Using an ohmmeter, measure the resistance between the sensor terminals.

Resistance: Refer to chart

If the resistance is not as specified, replace the sensor.

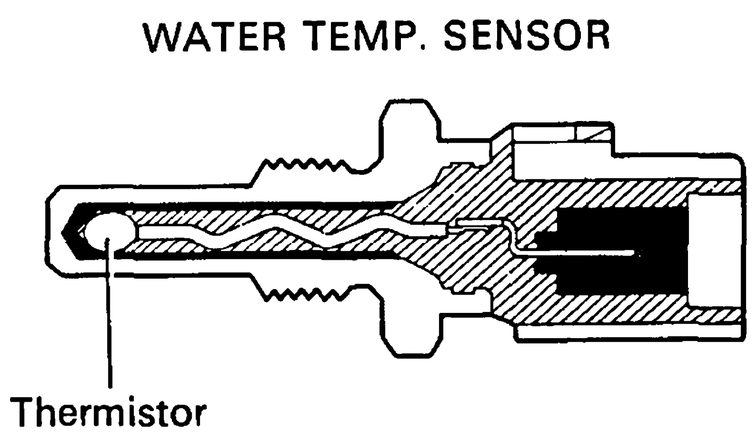

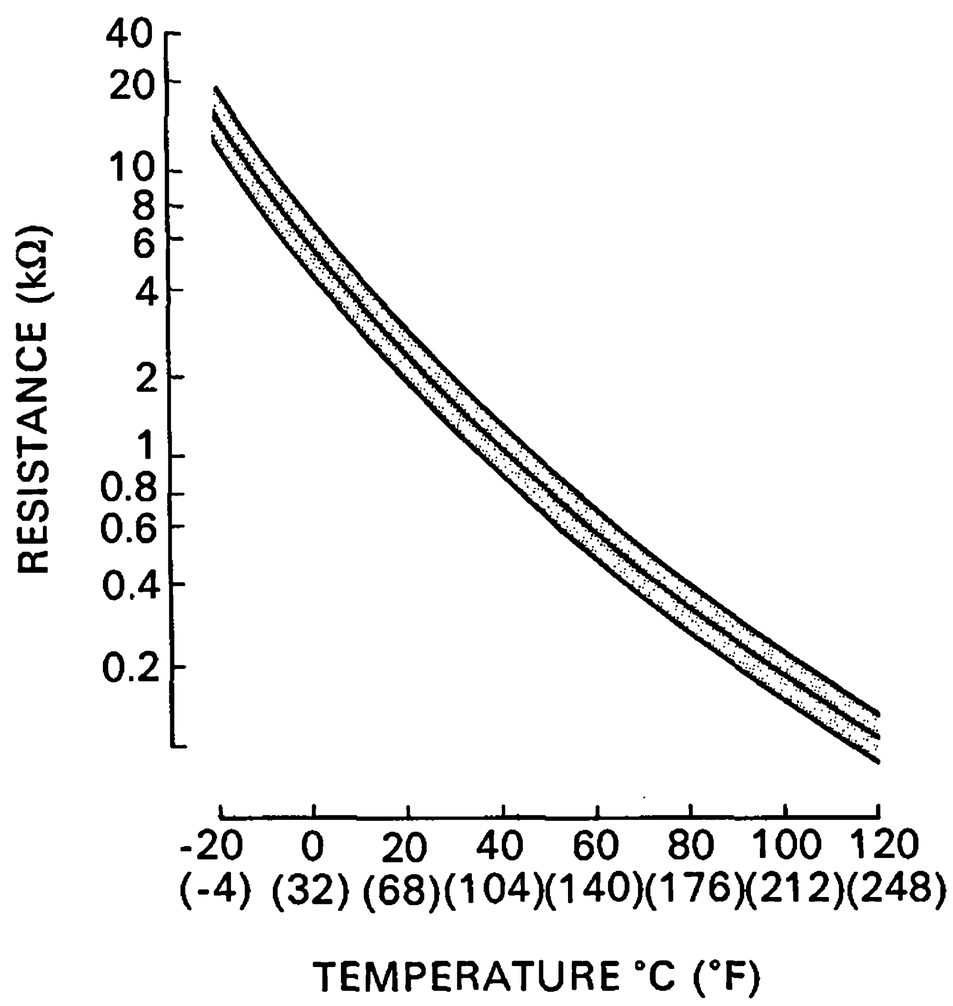

Fixed Delay Type (HZJ80 and HDJ80) ex. (Europe and Australia)

SYSTEM CIRCUIT

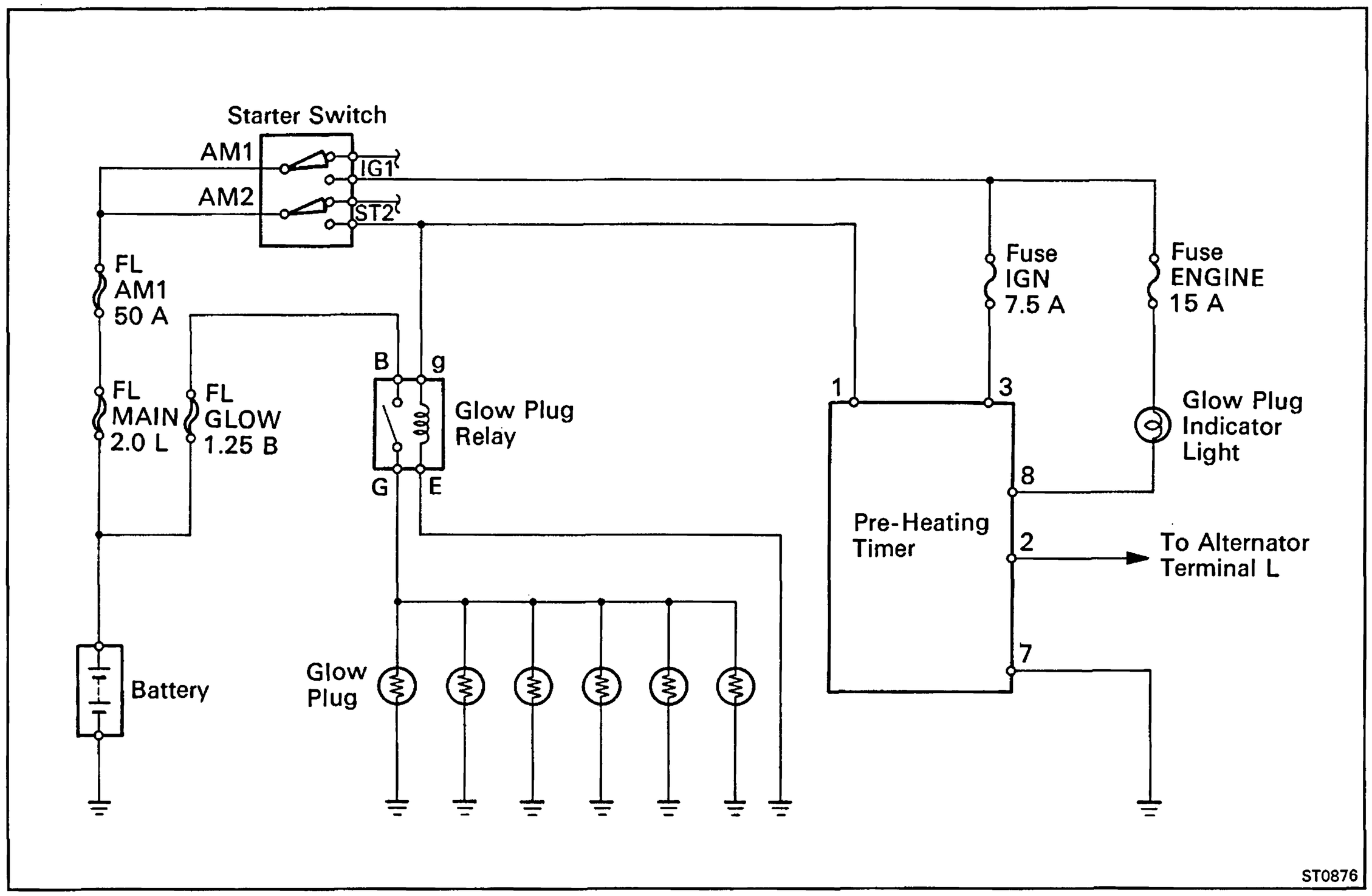

INSPECTION OF PRE-HEATING SYSTEM

1. INSPECT LIGHTING TIME OF GLOW INDICATOR LIGHT

Turn the starter switch "ON", measure the lighting time.

Light lighting time: Approx. 5 seconds

2. INSPECT PRE-HEATING TIME

Turn the starter switch "ON", and measure the time battery voltage is applied to terminal 1 of the pre-heating timer.

Pre-heating time: Approx. 18 seconds

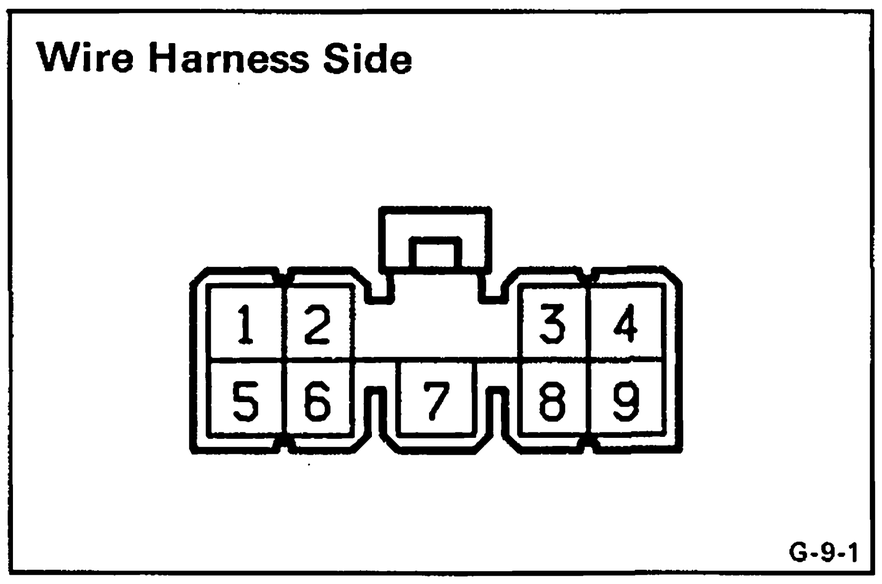

INSPECTION OF COMPONENTS

Pre-Heating Timer

INSPECT PRE-HEATING TIMER CIRCUIT

LOCATION: Under the instrument panel on the passenger side.

Disconnect the connector from the pre-heating timer, and check the connector on the wire harness side as shown in the following chart.

Check for	Tester connection	Condition	Specified value
Voltage	1 – Ground	Turn starter switch OFF	No voltage
		Turn starter switch START	Battery voltage
Voltage	3 – Ground	Turn starter switch OFF	No voltage
		Turn starter switch ON	Battery voltage
Continuity	7 – Ground	–	Continuity
Voltage	8 – Ground	Turn starter switch OFF	No voltage
		Turn starter switch ON	Battery voltage

Glow Plug Relay

(See No.2 Glow Plug Relay (PZJ, HZJ and HDJ) on page ST-6)

LOCATION: In the engine compartment on the left side.

Glow Plug

(See page ST-7)

Fixed Delay Type (PZJ, HZJ75, HZB and HDB) ex. (Europe and Australia)

SYSTEM CIRCUIT

PZJ and HZJ 75

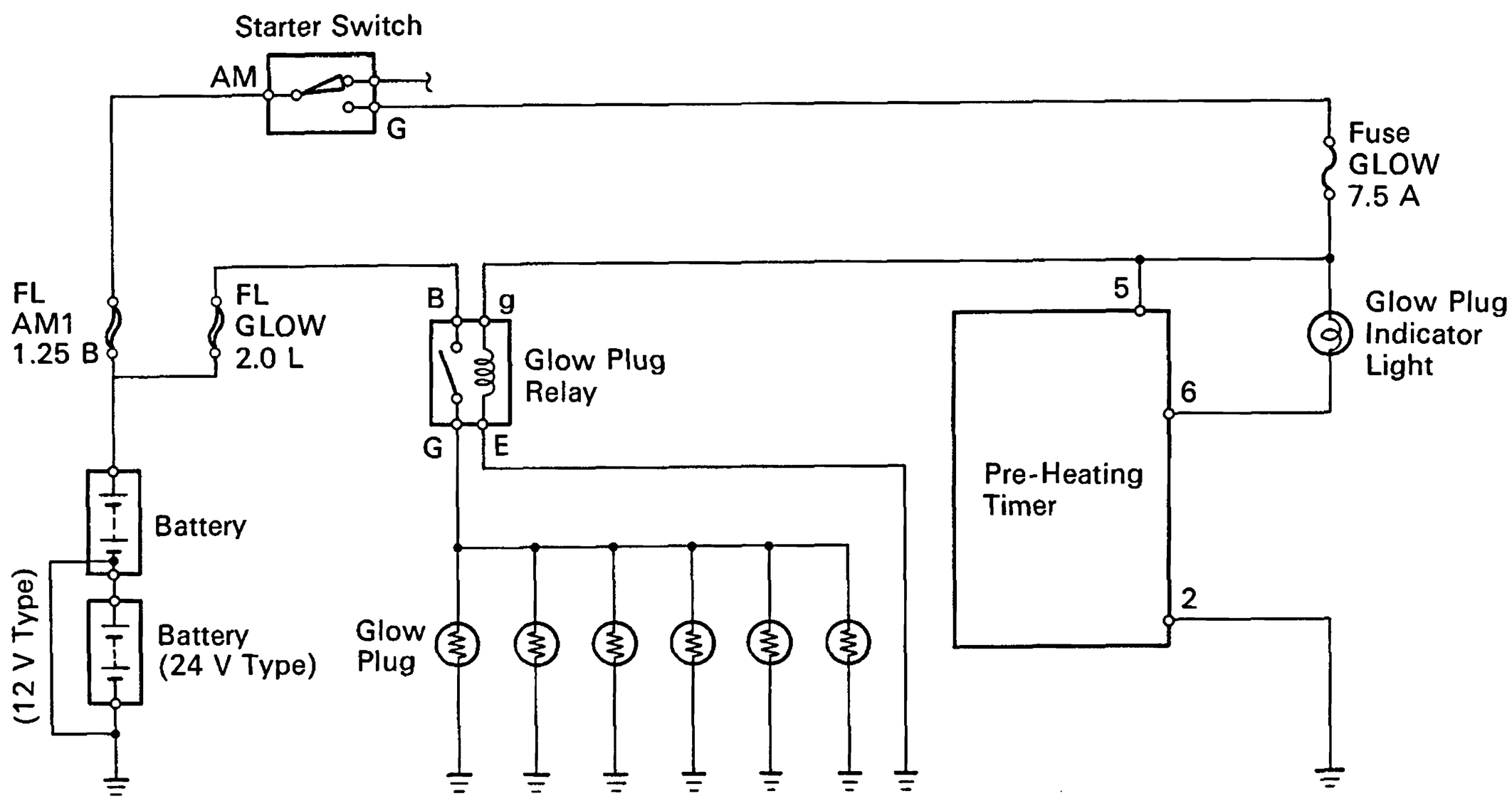

HZB and HDB

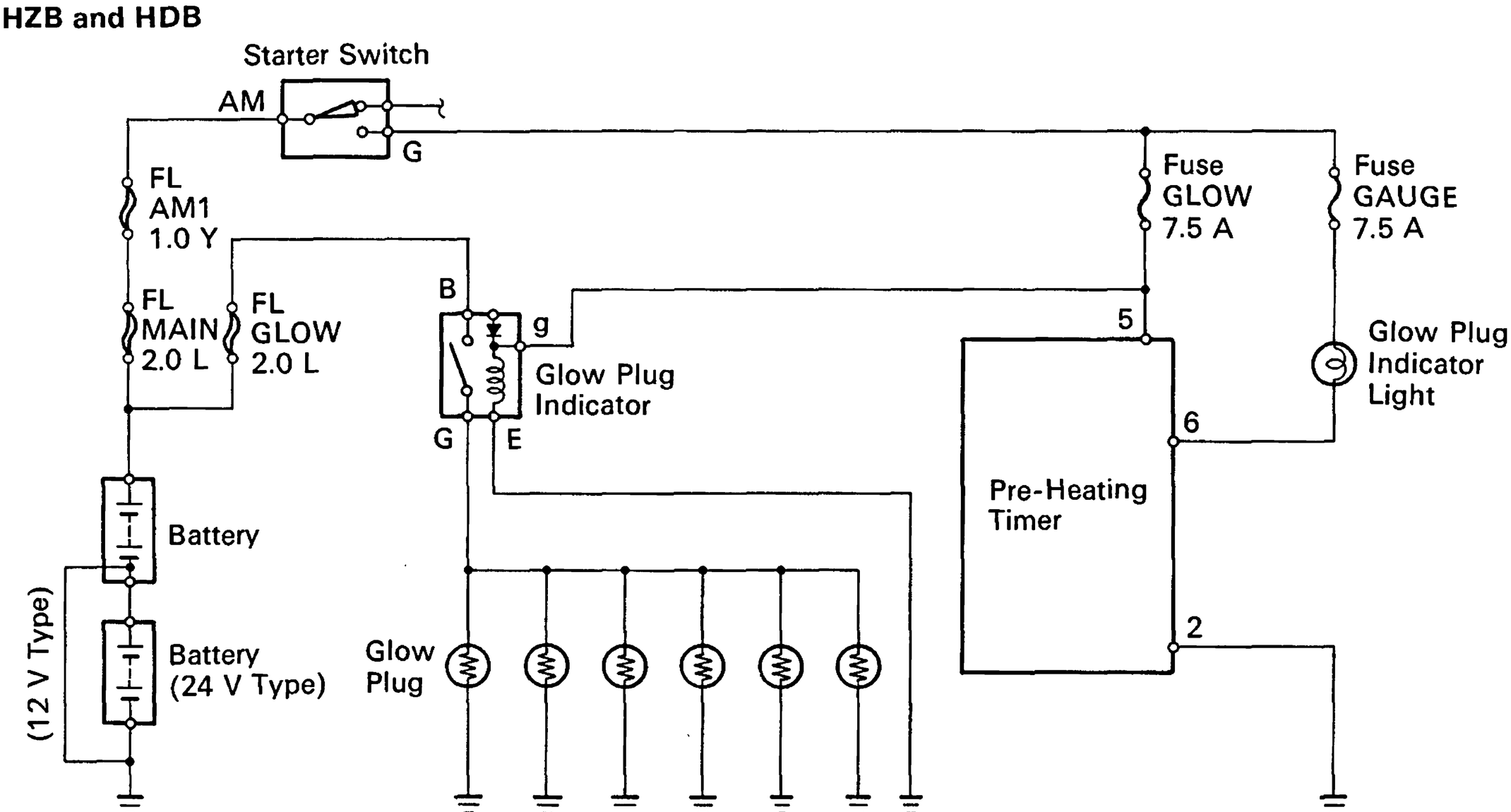

ST0880
ST0881

INSPECTION OF PRE-HEATING SYSTEM

INSPECT LIGHTING TIME OF GLOW INDICATOR LIGHT

Turn the starter switch "G", measure the lighting time.

Light lighting time:

12 V type Approx. 6 seconds
24 V type Approx. 5 seconds

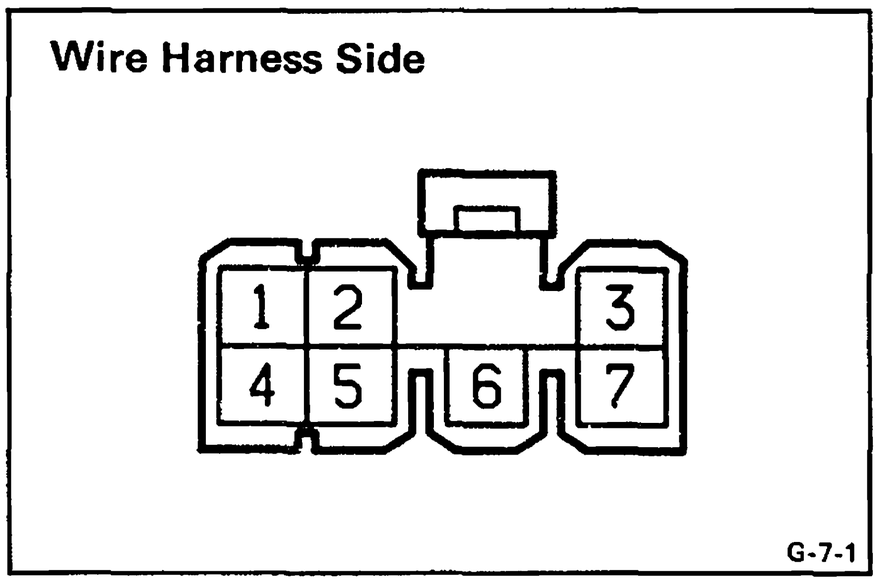

INSPECTION OF COMPONENTS

Pre-Heating Timer

INSPECT PRE-HEATING TIMER CIRCUIT

LOCATION:
PZJ, HZJ75 Under the instrument panel on the passenger side.
HZB, HDB Under the instrument panel center.

Disconnect the connector from the pre-heating timer, and check the connector on the wire harness side as shown in the following chart.

Check for	Tester connection	Condition	Specified value
Continuity	2 – Ground	–	Continuity
Voltage	5 – Ground	Turn starter switch OFF	No voltage
		Turn starter switch G	Battery voltage
Voltage	6 – Ground	Turn starter switch OFF	No voltage
		Turn starter switch G	Battery voltage

Glow Plug Relay (PZJ and HZJ75)

(See No.2 Glow Plug Relay (PZJ, HZJ and HDJ) on page ST-6)

LOCATION: In the engine compartment on the left side.

Glow Plug Relay (HZB and HDB)

(See No.2 Glow Plug Relay (HZB and HDB) on page ST-6)

LOCATION: Inside wall adjacent to center door.

Glow Plug

(See page ST-7)

TROUBLESHOOTING

Problem	Possible cause	Remedy	Page
Engine will not crank	Battery charge low	Check battery specific gravity Charge or replace battery	CH-5
	Battery cables loose, corroded or worn	Repair or replace cables	
	Neutral start switch faulty (A/T only)	Replace switch	
	Fusible link blown	Replace fusible link	
	Starter relay faulty	Check relay	ST-25, 26
	Starter faulty	Repair starter	ST-15
	Starter switch faulty	Replace starter switch	
Engine cranks slowly	Battery charge low	Check battery specific gravity Charge or replace battery	CH-5
	Battery cables loose, corroded or worn	Repair or replace cables	
	Starter faulty	Repair starter	ST-15
Starter keeps running	Starter faulty	Repair starter	ST-15
	Starter switch faulty	Repalce starter switch	
	Short in wiring	Repair wiring	
Starter spins but engine will not crank	Pinion gear teach broken or faulty starter	Repair starter	ST-15
	Flywheel teeth broken	Replace flywheel	ST-15

STARTING SYSTEM CIRCUIT

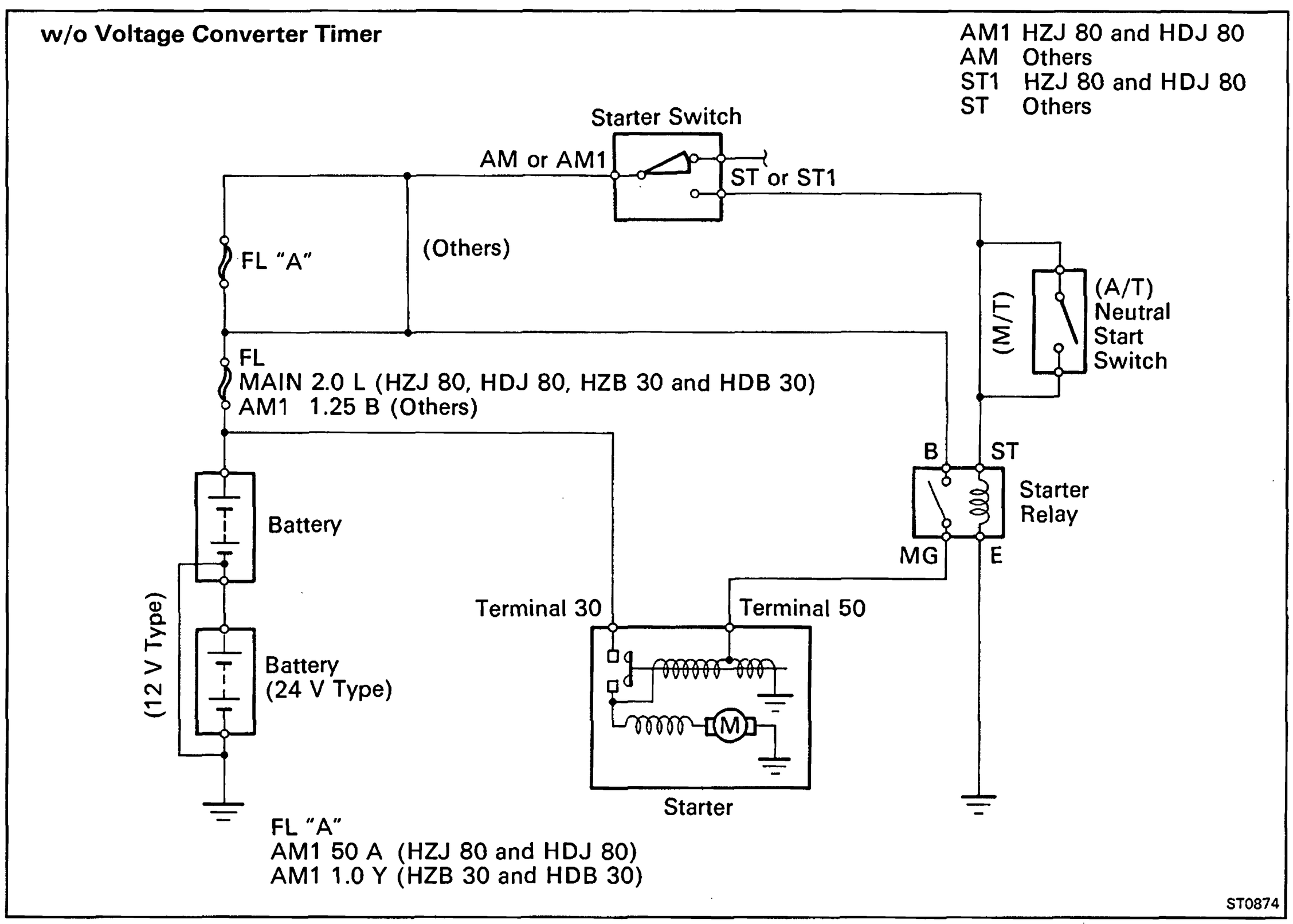

STARTING SYSTEM CIRCUIT (Cont'd)

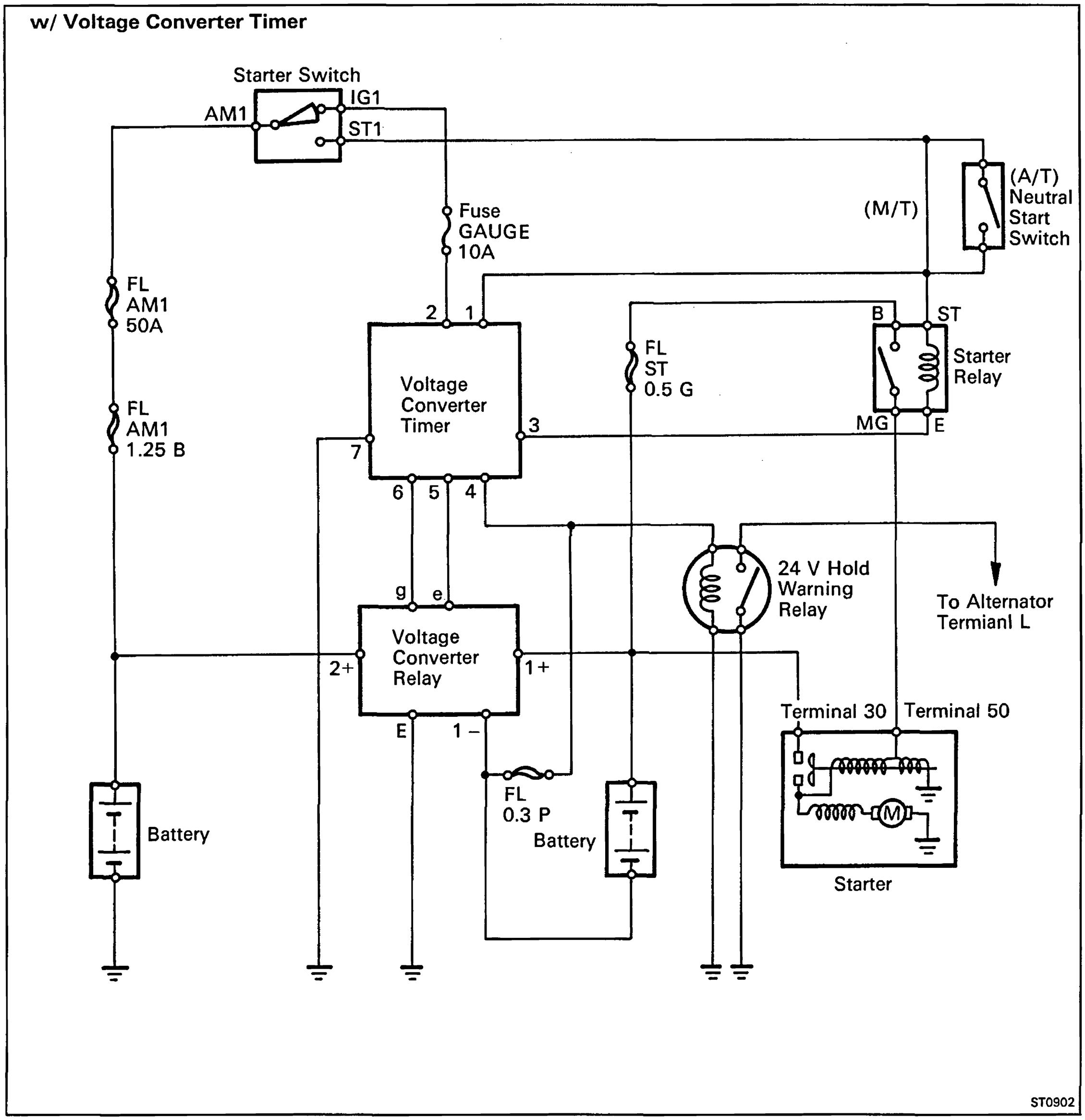

STARTER

COMPONENTS

Snap Ring
Pinion Gear
Starter Hoasing
Retainer
Starter Clutch
Compression Spring
Clutch Shaft
Return Spring
Magnetic Switch
Stop Collar
Compression Spring
Steel Ball
Bearing
Ider Gear
Plate Washer
Lock Plate
Through Bolt
◆ O-Ring
Felt Washer
Rear Bearing
Armature
Front Bearing
Field Frame (Field Coil)
Brush
Brush Holder
End Cover
◆ Non-reusable part
ST0871

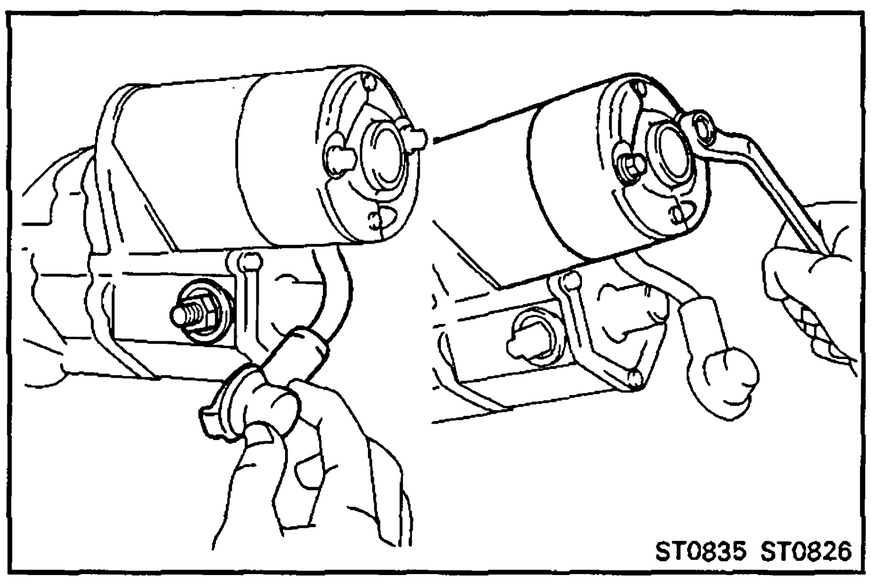

DISASSEMBLY OF STARTER

1. REMOVE FIELD FRAME AND ARMATURE

(a) Remove the nut and spring washer, and disconnect the lead wire from the magnetic switch terminal.

(b) Remove the two through bolts, spring washers, plate washers and O-rings.

(c) Pull out the field frame together with the armature.

(d) Remove the felt washer and lock plate.

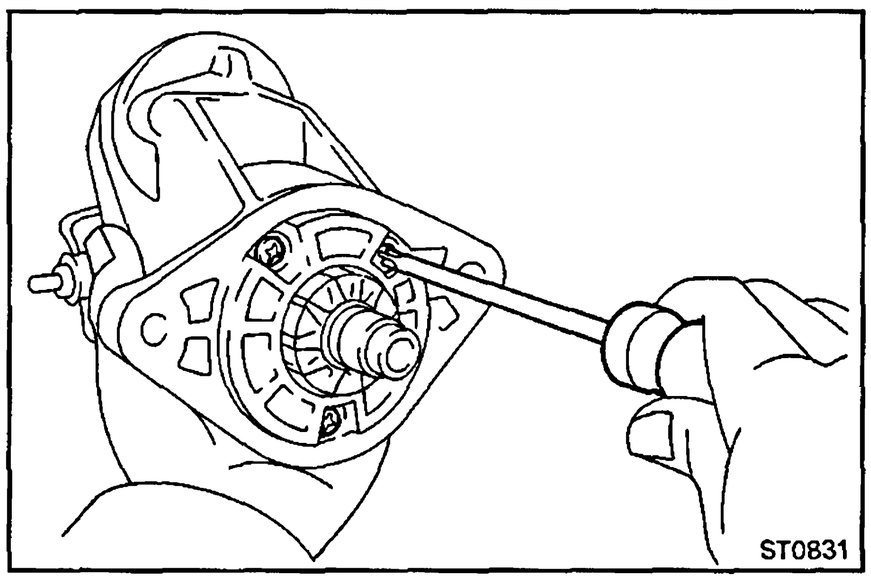

2. REMOVE STARTER HOUSING, CLUTCH ASSEMBLY AND GEARS

(a) Remove the three screws.

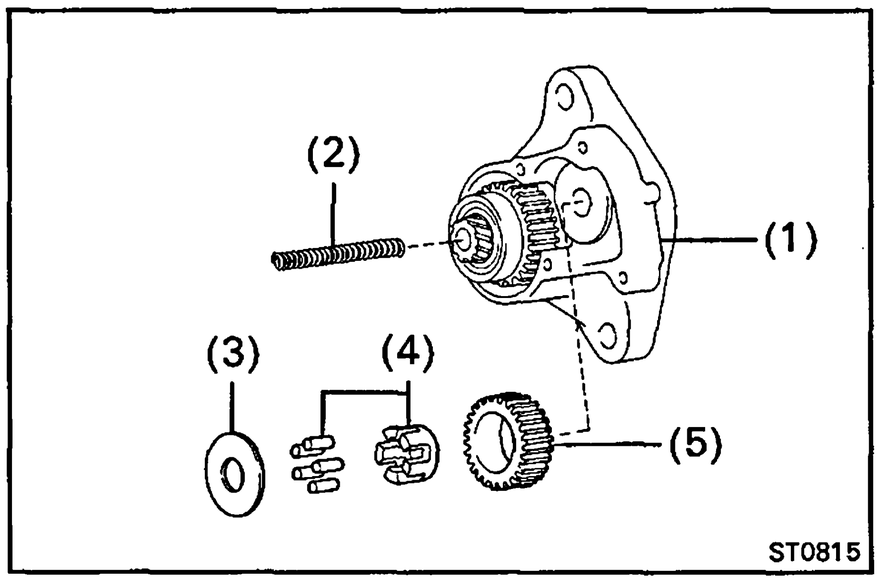

(b) Remove the following parts from the magnetic switch:
  (1) Starter housing and clutch assembly
  (2) Return spring
  (3) Plate washer
  (4) Idler gear
  (5) Bearing

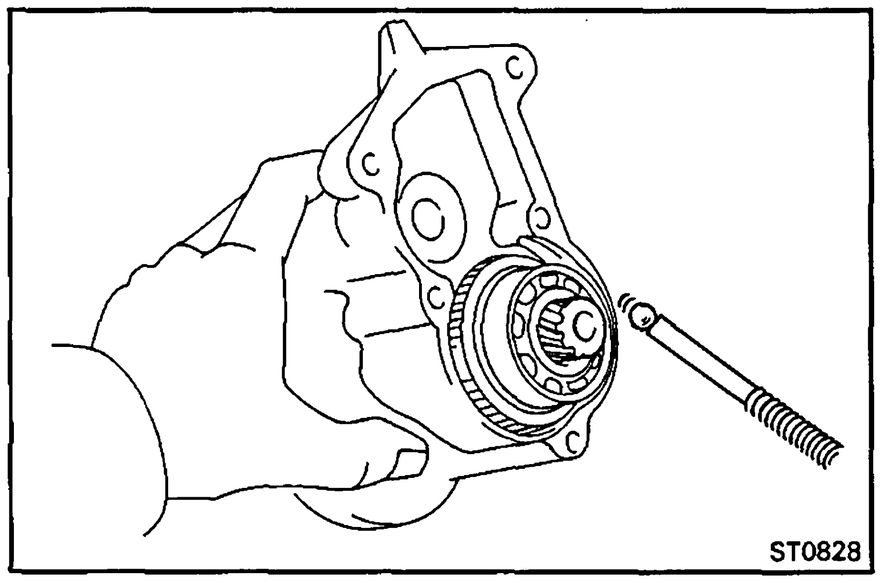

3. REMOVE STEEL BALL

Using a magnetic finger, remove the steel ball from the clutch shaft hole.

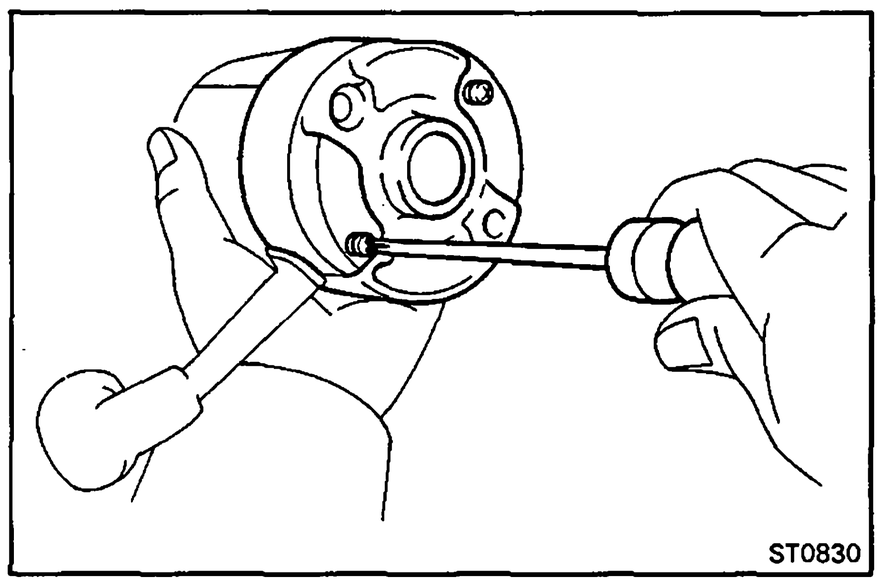

4. REMOVE BRUSH HOLDER

(a) Remove the two screws and end cover from the field frame.

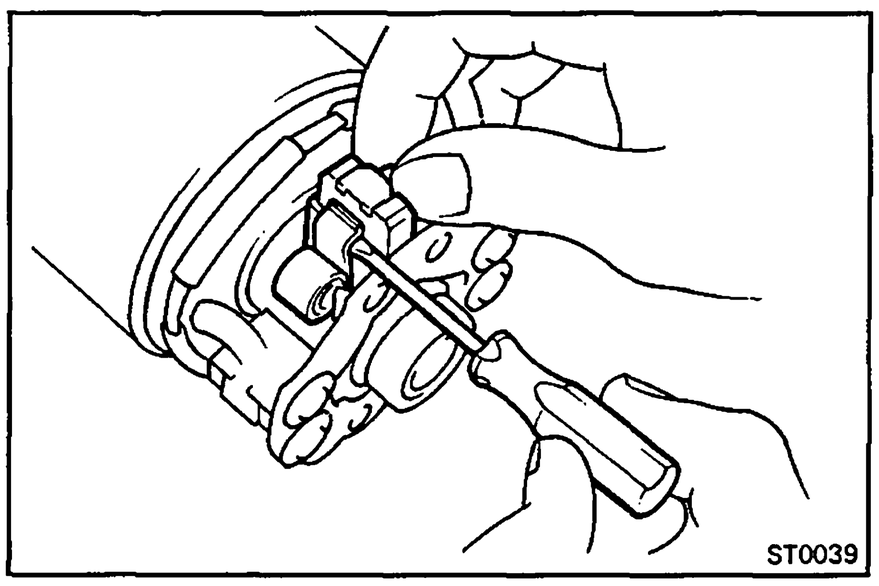

(b) Using a screwdriver, hold the spring back and disconnect the brush from the brush holder. Disconnect the four brushes, and remove the brush holder.

5. REMOVE ARMATURE FROM FIELD FRAME

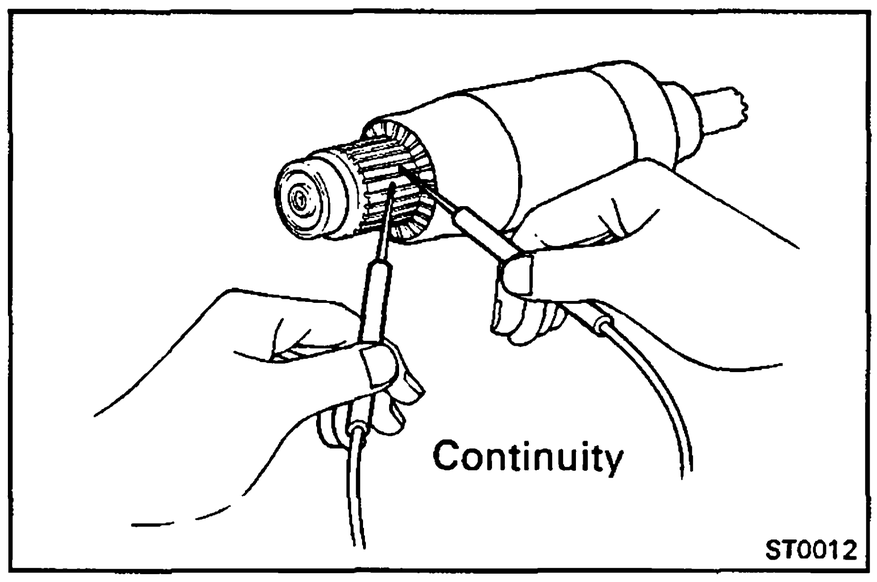

INSPECTION AND REPAIR OF STARTER

Armature Coil

1. INSPECT COMMUTATOR FOR OPEN CIRCUIT

Using an ohmmeter, check that there is continuity between the segments of the commutator.

If there is no continuity, replace the armature.

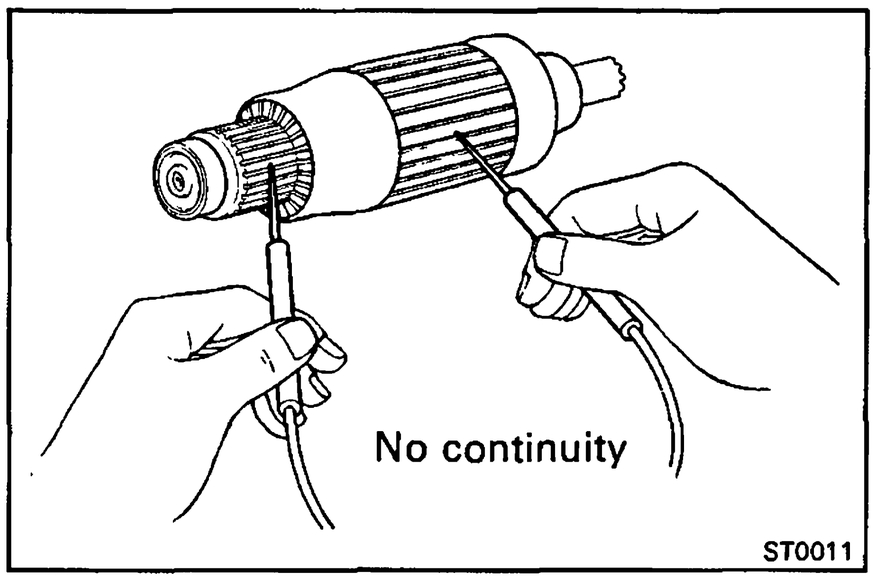

2. INSPECT COMMUTATOR FOR GROUND

Using an ohmmeter, check that there is no continuity between the commutator and armature coil core.

If there is continuity, replace the armature.

Commutator

1. INSPECT COMMUTATOR FOR DIRTY AND BURNT SURFACE

If the surface is dirty or burnt, correct with sandpaper (No.400) or on a lathe.

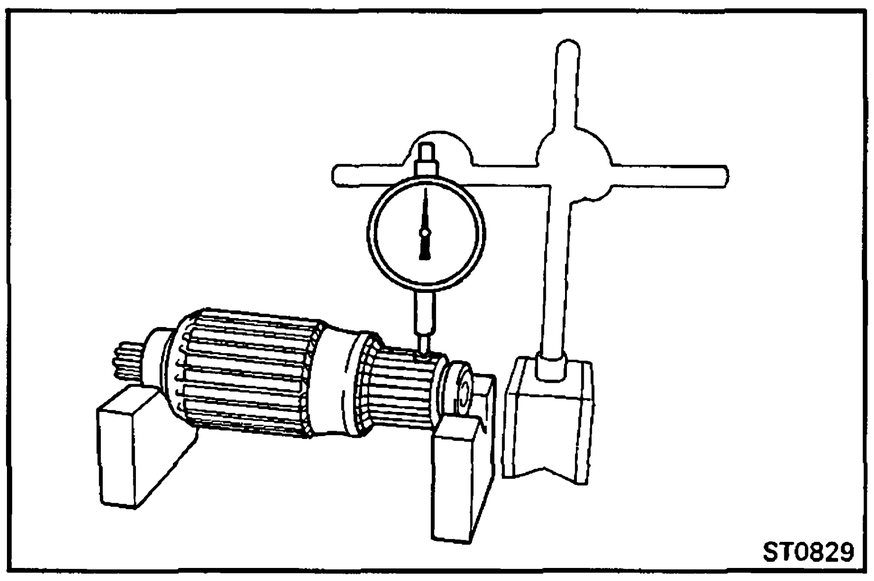

2. INSPECT COMMUTATOR FOR RUNOUT

(a) Place the commutator on V-blocks.

(b) Using a dial indicator, measure the circle runout.

Maximum circle runout: 0.05 mm (0.0020 in.)

If the circle runout is greater than maximum, correct it on a lathe.

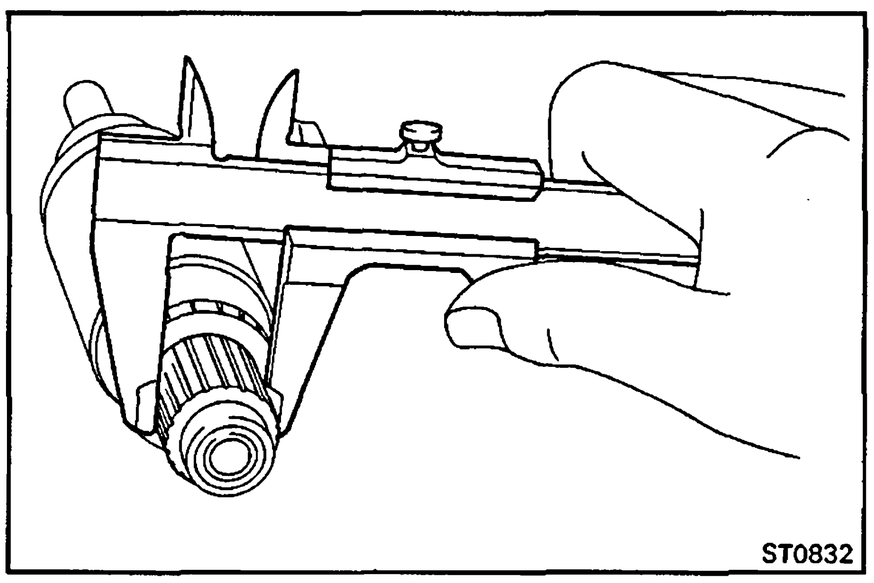

3. INSPECT COMMUTATOR DIAMETER

Using calipers, measure the diameter.

Standard diameter: 36.0 mm (1.417 in.)

Minimum diameter: 35.0 mm (1.378 in.)

If the diameter of the commutator is less than minimum, replace the armature.

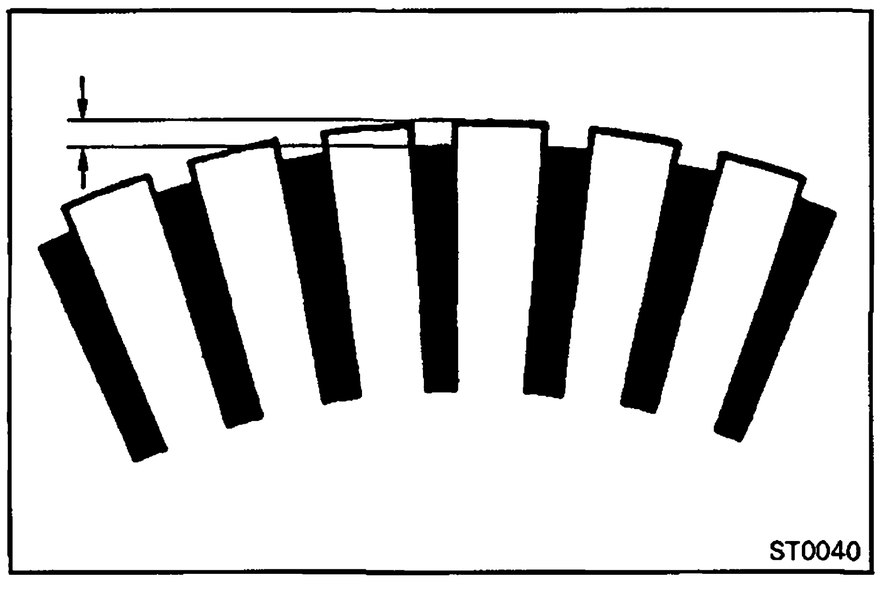

4. INSPECT UNDERCUT DEPTH

Check that the undercut depth is clean and free of foreign material. Smooth out the edge.

Standard undercut depth: 0.7 – 0.9 mm (0.028 – 0.035 in.)

Minimum undercut depth: 0.2 mm (0.008 in.)

If the undercut depth is less than minimum, correct it with a hacksaw blade.

Field Coil (Field Frame)

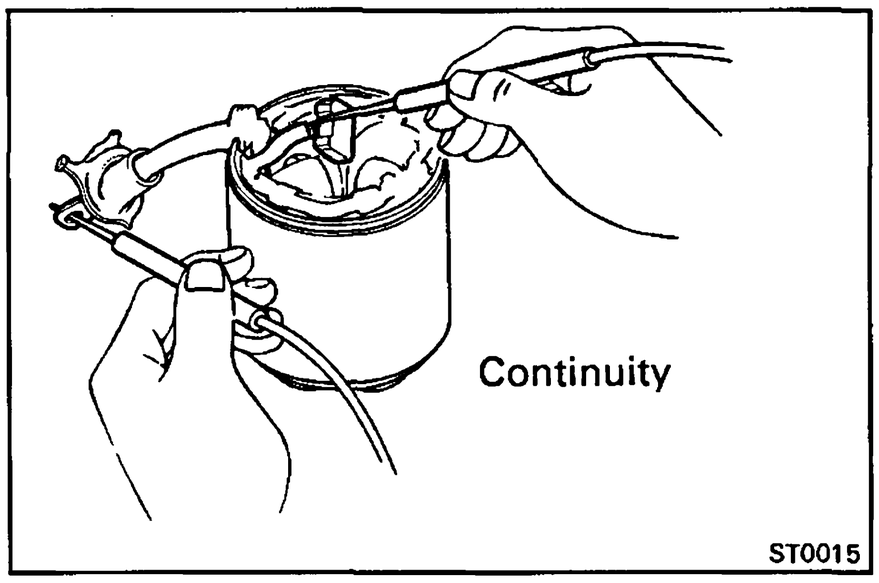

1. INSPECT FIELD COIL FOR OPEN CIRCUIT

Using an ohmmeter, check that there is continuity between the lead wire and field coil brush lead.

If there is no continuity, replace the field frame.

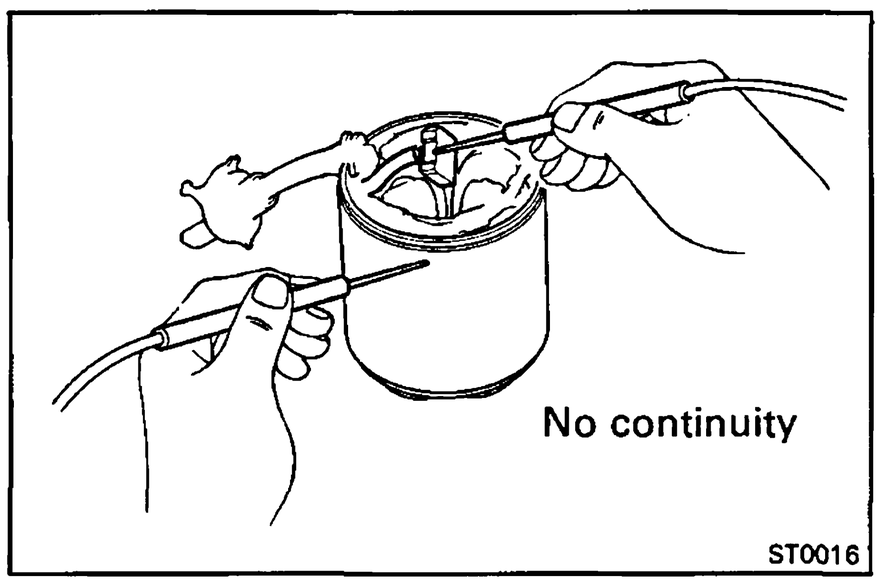

2. INSPECT FIELD COIL FOR GROUND

Using an ohmmeter, check that there is no continuity between the field coil end and field frame.

If there is continuity, replace the field frame.

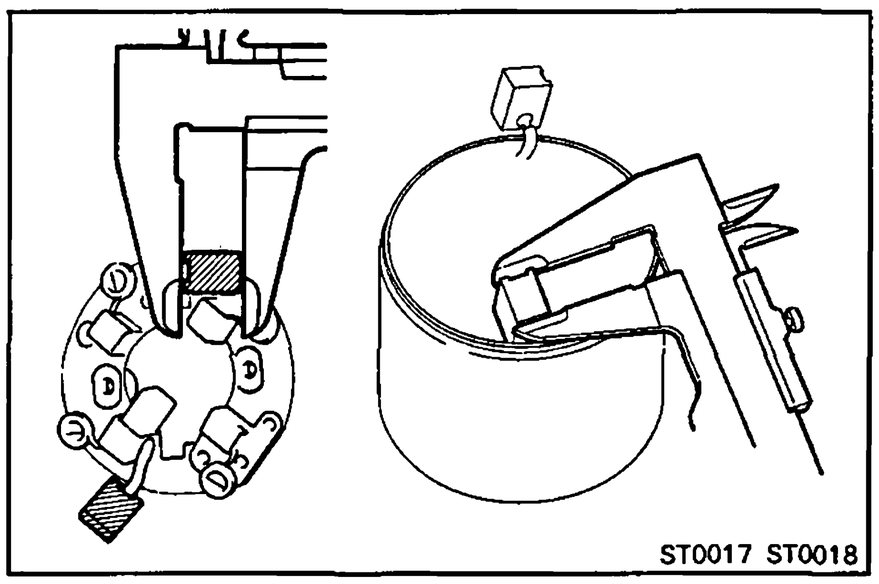

Brushes

INSPECT BRUSH LENGTH

Using calipers, measure the brush length.

Standard length: 20.5 – 21.0 mm (0.807 – 0.827 in.)

Minimum length: 13.0 mm (0.512 in.)

If the length is less than minimum, replace the brush holder and field frame.

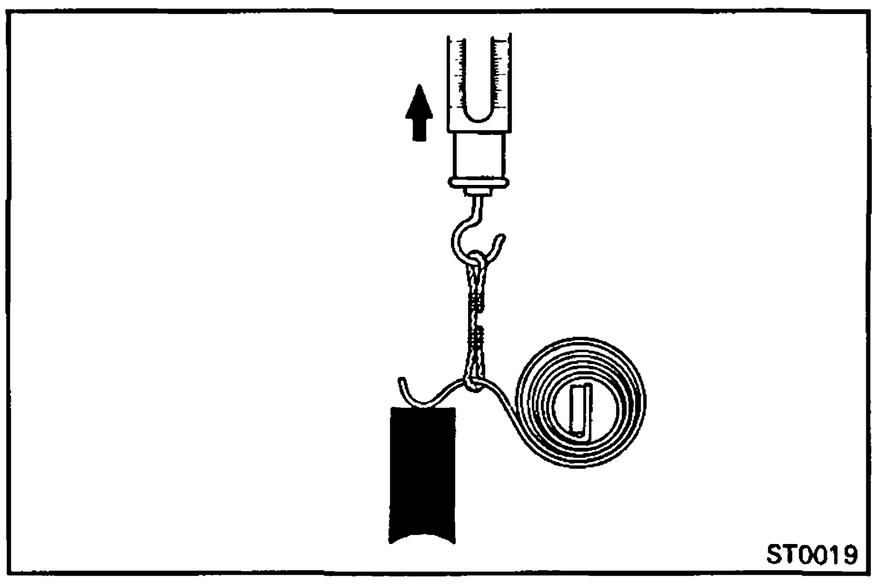

Brush Springs

INSPECT BRUSH SPRING LOAD

Take the pull scale reading the instant the brush spring separates from the brush.

Standard installed load: 3.2 – 4.0 kg (7.1 – 8.8 lb, 31 – 39 N)

If the installed load is not as specified, replace the brush springs.

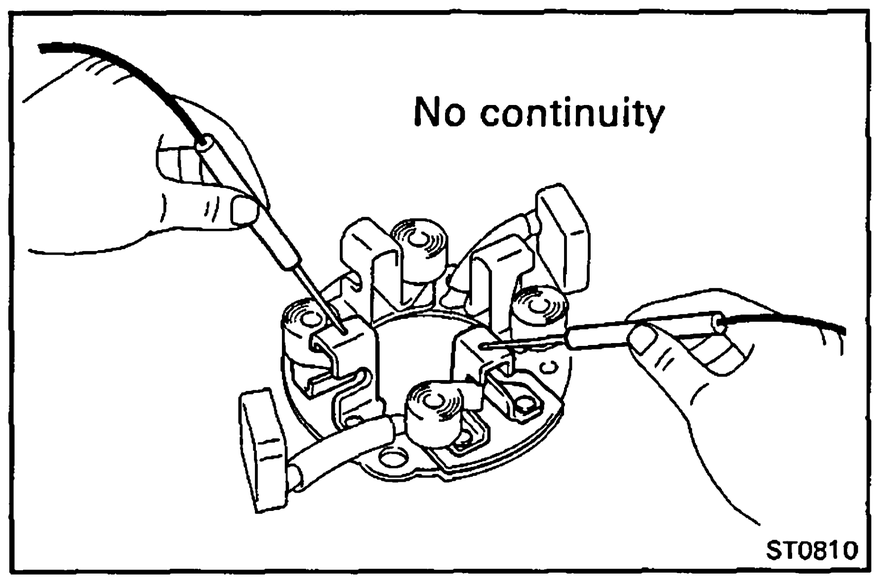

Brush Holder

INSPECT BRUSH HOLDER INSULATION

Using an ohmmeter, check that there is no continuity between the positive (+) and negative (–) brush holders.

If there is continuity, repair or replace the brush holder.

Clutch and Gears

1. INSPECT GEAR TEETH

Check the gear teeth on the pinion gear, idler gear and the clutch assembly for wear or damage.

If damaged, replace the gear or clutch assembly.

If damaged, also check the flywheel ring gear for wear or damage.

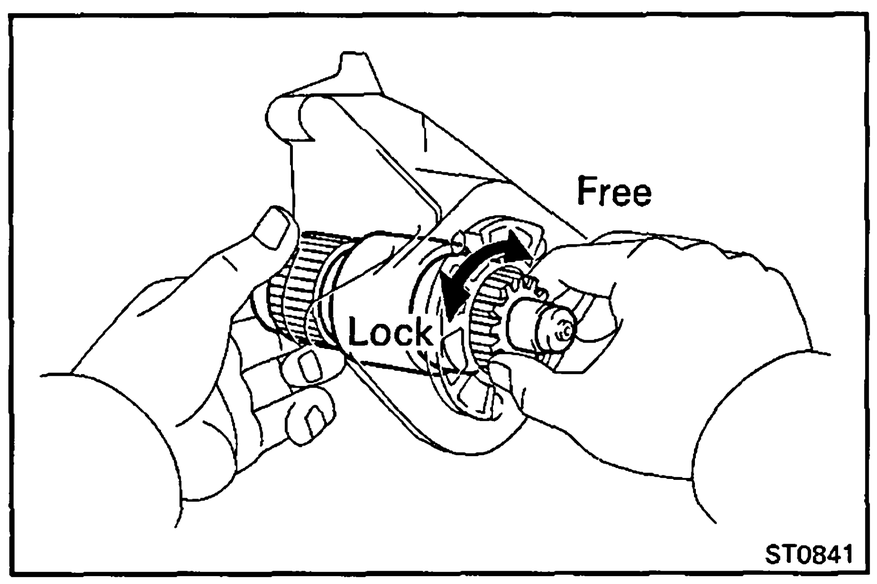

2. INSPECT CLUTCH PINION GEAR

Rotate the pinion gear clockwise and check that it turns freely. Try to rotate the pinion gear counterclockwise and check that it locks.

If necessary, replace the clutch assembly.

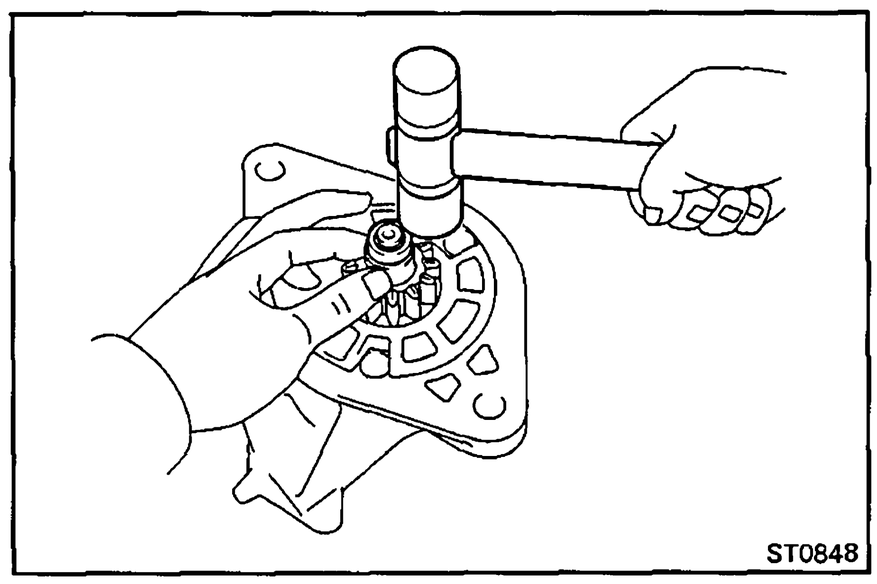

3. IF NECESSARY, REPLACE CLUTCH ASSEMBLY

A. Disassembly starter housing and clutch assembly

(a) Push down the pinion gear and starter housing.

(b) Using a plastic-faced hammer, tap in the stop collar.

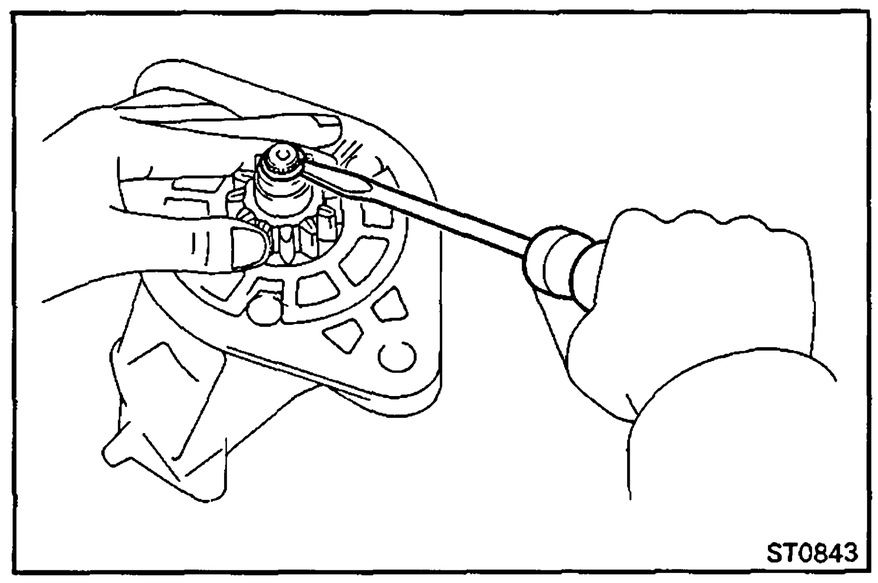

(c) Using a screwdriver, pry out the snap ring.

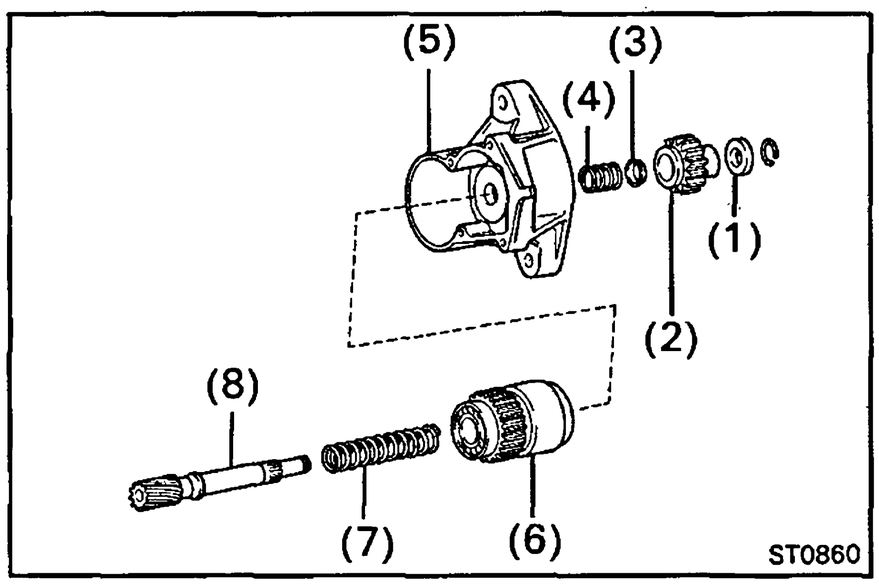

(d) Disassembly the following parts:
  (1) Stop collar
  (2) Pinion gear
  (3) Retainer
  (4) Compression spring
  (5) Starter housing
  (6) Starter clutch
  (7) Compression spring
  (8) Clutch shaft

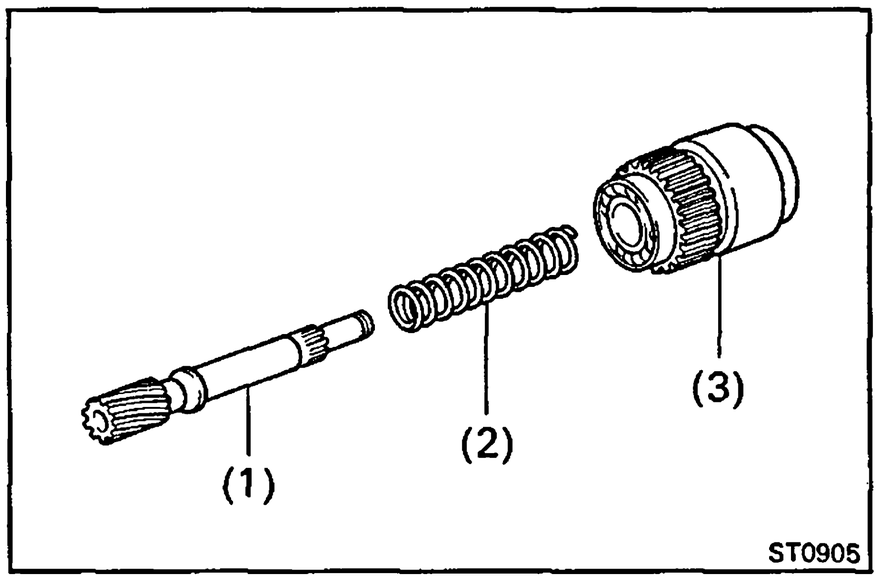

B. Assemble starter housing and clutch assembly

(a) 1st, assemble the following parts:
  (1) Clutch shaft
  (2) Compression spring
  (3) Starter clutch

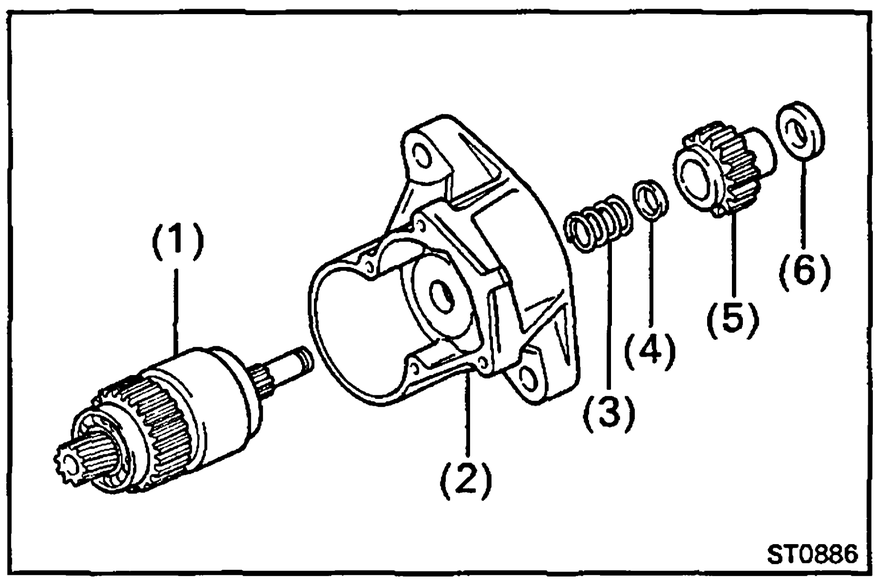

(b) 2nd, assemble the following parts:
  (1) Clutch shaft and starter shaft assembly
  (2) Starter housing
  (3) Compression spring
  (4) Retainer
  (5) Pinion gear
  (6) Stop collar

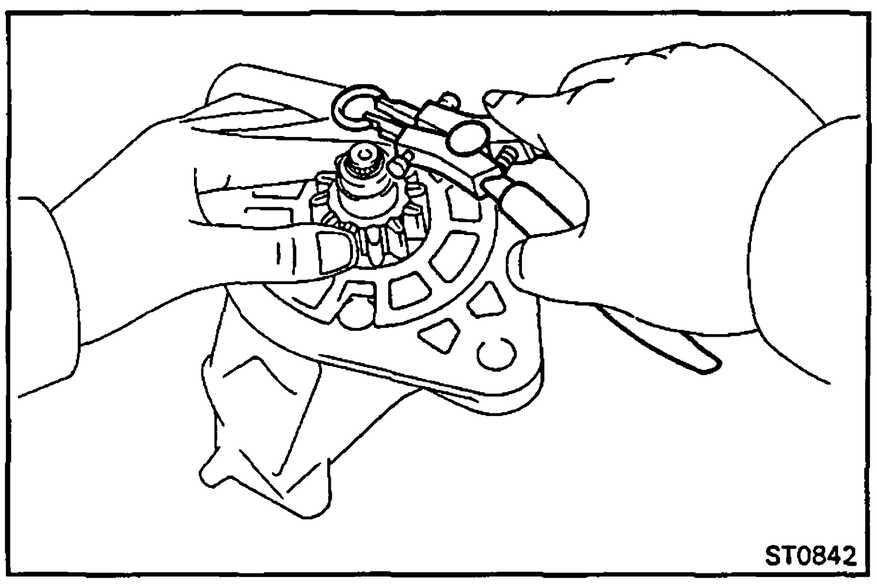

(c) Push down the pinion gear and starter housing.

(d) Using snap ring pliers, install the snap ring.

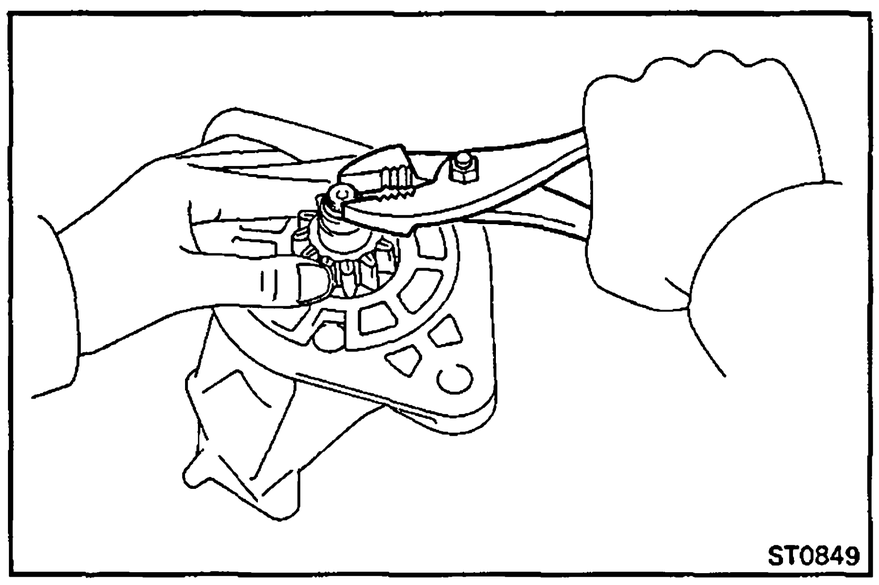

(e) Using pliers, compress the snap ring.

(f) Check that the snap ring fits correctly.

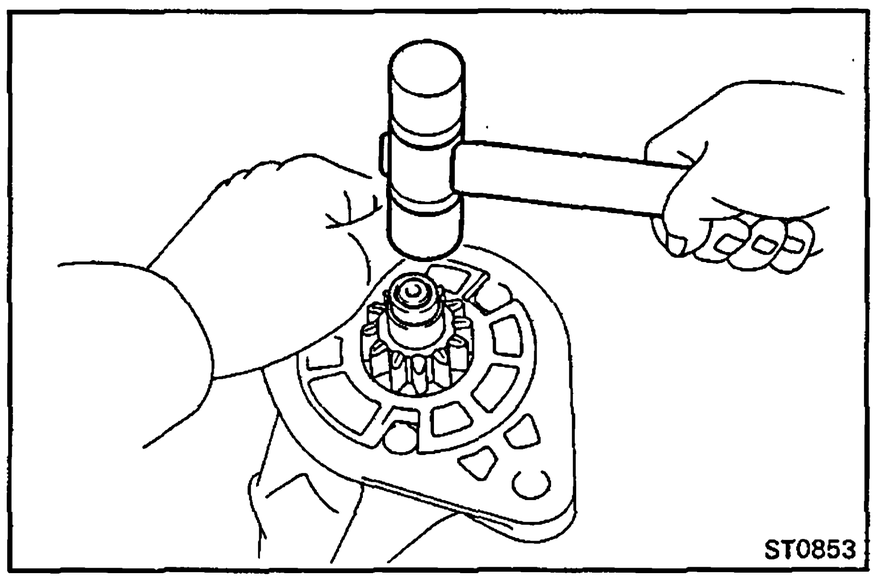

(g) Using a plastic-faced hammer, tap the clutch shaft and install the stop collar onto the snap ring.

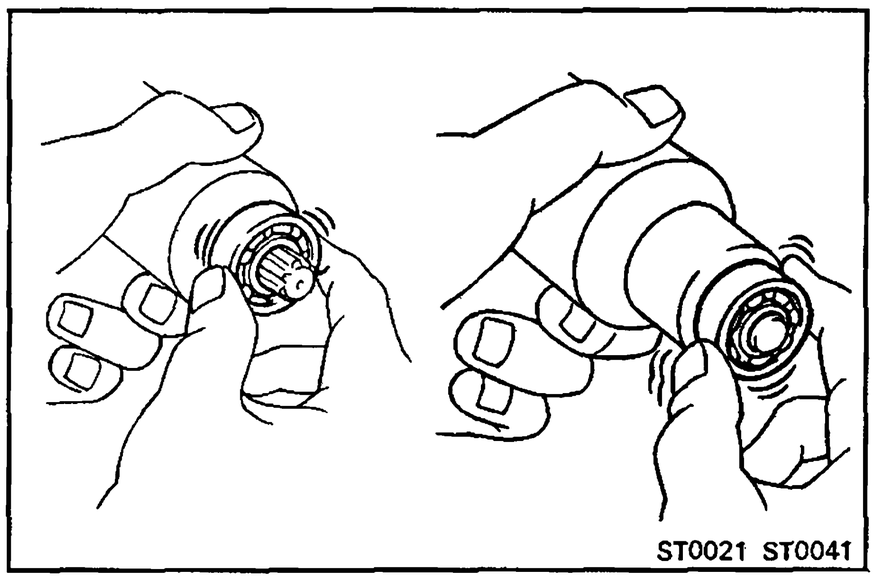

Bearings

1. INSPECT BEARINGS

Turn each bearing by hand while applying inward force.

If resistance is felt or if the bearing sticks, replace the bearing.

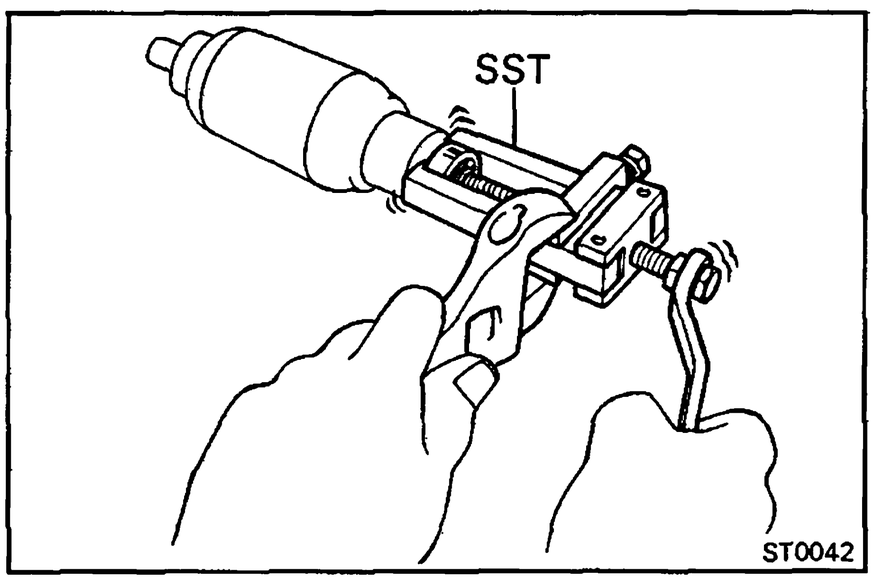

2. IF NECESSARY, REPLACE BEARINGS

A. Remove bearings

Using SST, remove the bearing.

SST 09286-46011

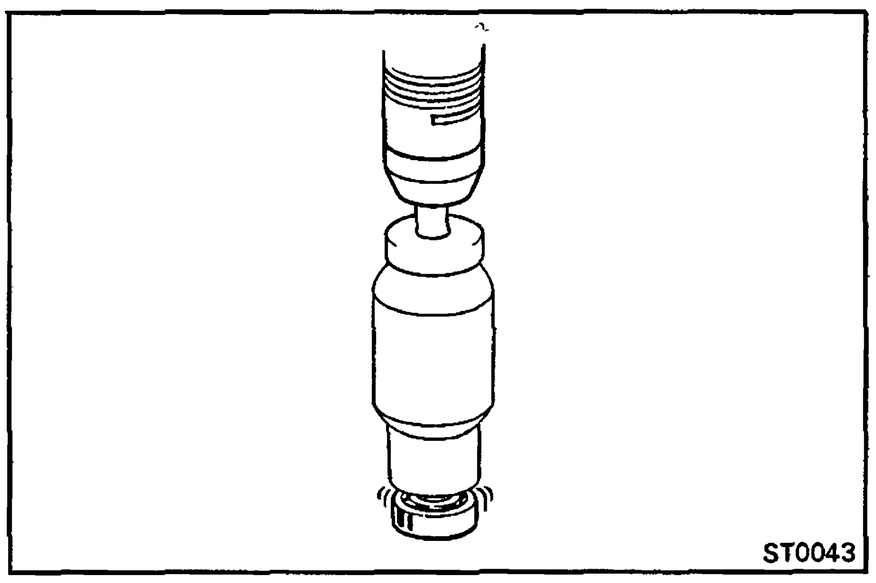

B. Install bearings
(Front)

Using a press, press in a new bearing.

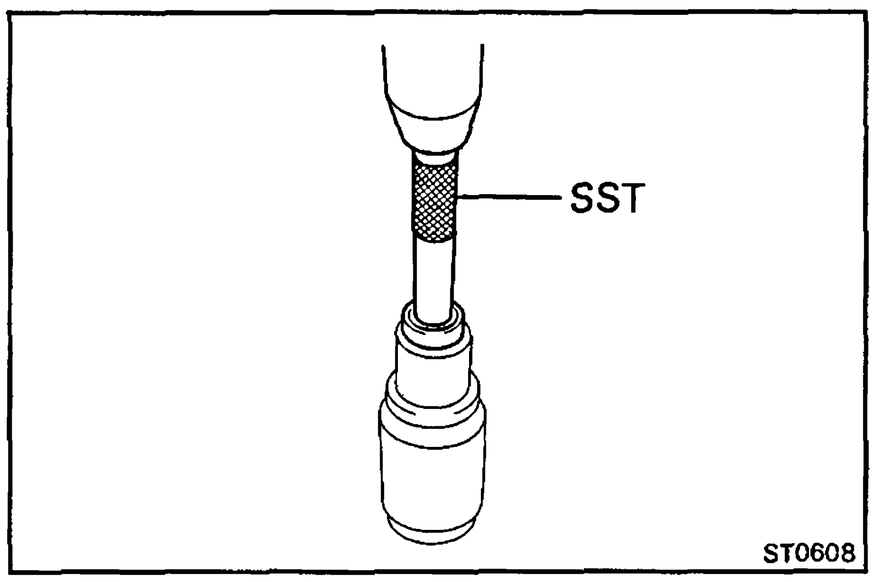

(Rear)

Using SST and a press, press in a new bearing.

SST 09285-76010

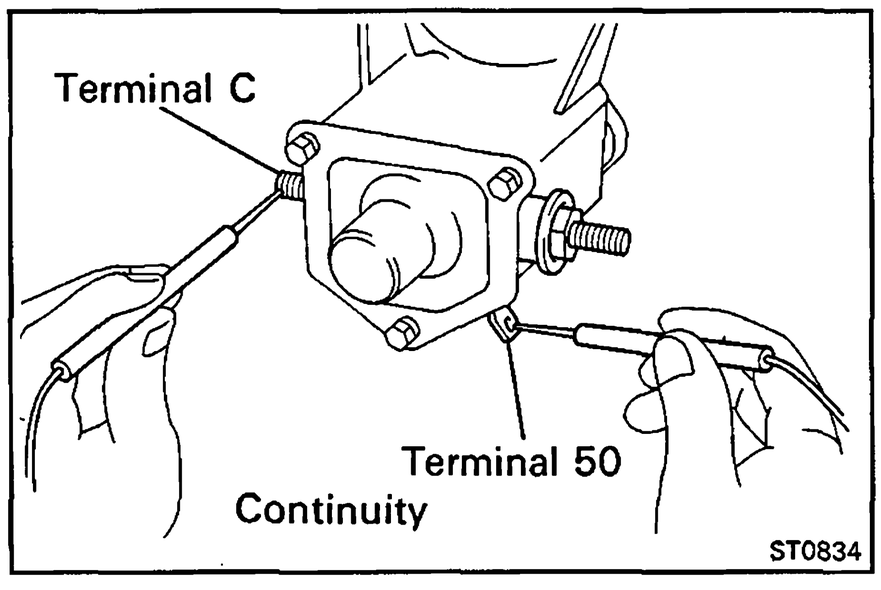

Magnetic Switch

1. PERFORM PULL-IN COIL OPEN CIRCUIT TEST

Using an ohmmeter, check that there is continuity between terminals 50 and C.

If there is no continuity, replace the magnetic switch.

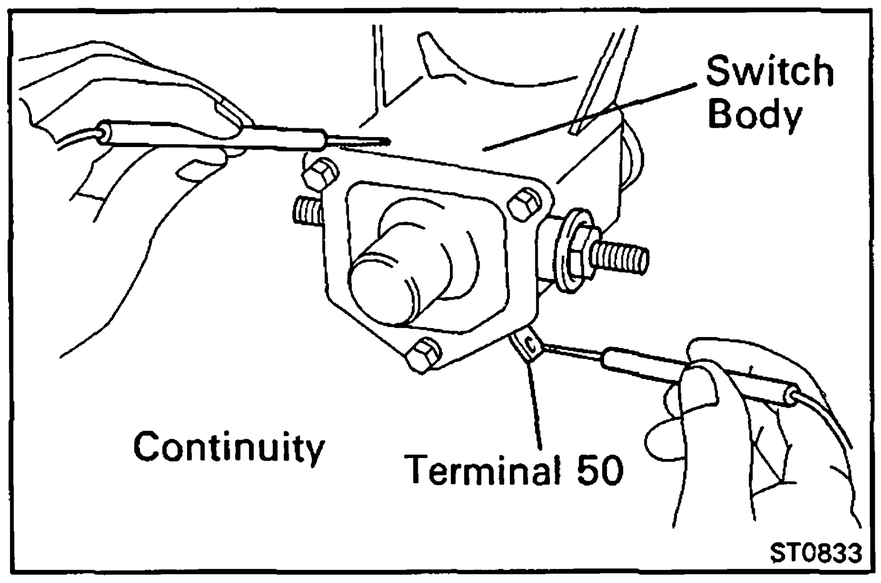

2. PERFORM HOLD-IN COIL OPEN CIRCUIT TEST

Using an ohmmeter, check that there is continuity between terminal 50 and the switch body.

If there is no continuity, replace the magnetic switch.

ASSEMBLY OF STARTER

(See page ST-15)

HINT: Use high-temperature grease to lubricate the bearings and gears when assembling the starter.

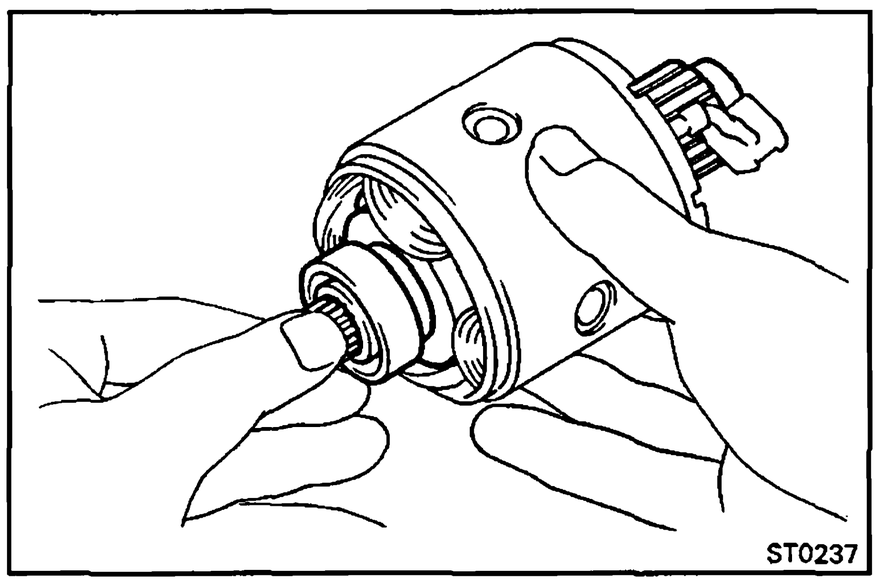

1. PLACE ARMATURE INTO FIELD FRAME

Apply grease to the armature bearings, and insert the armature into the field frame.

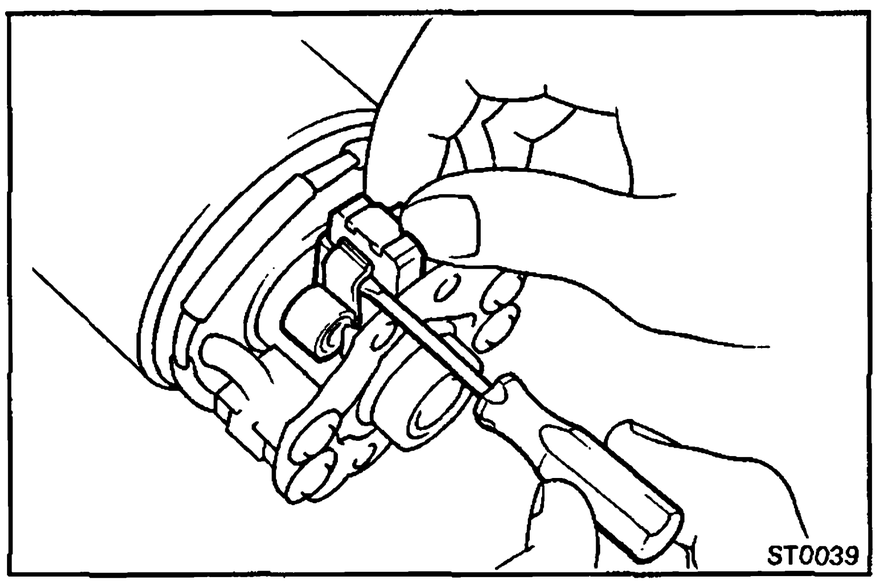

2. INSTALL BRUSH HOLDER

(a) Place the brush holder on the armature.

(b) Using a screwdriver, hold the brush spring back, and connect the brush into the brush holder. Connect the four brushes.

HINT: Check that positive (+) lead wires are not grounded.

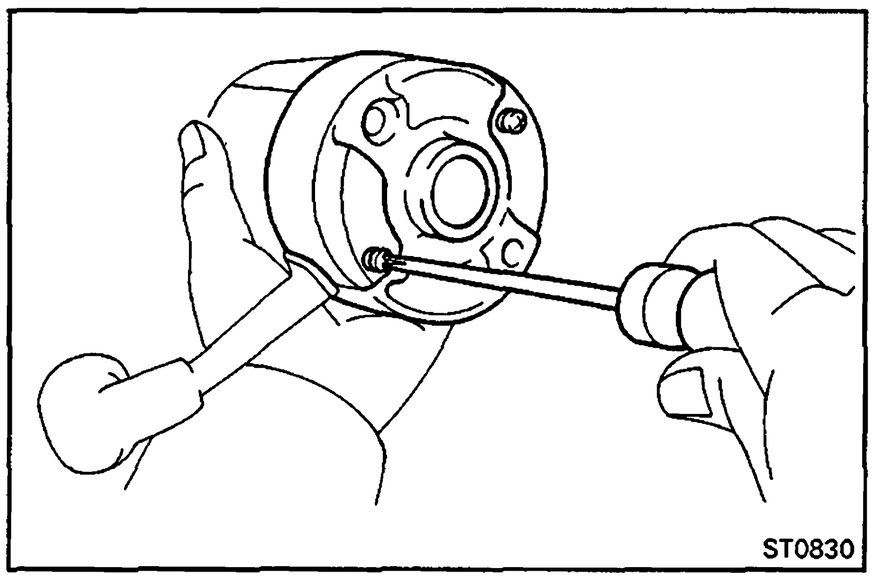

(c) Install the end cover with the two screws.

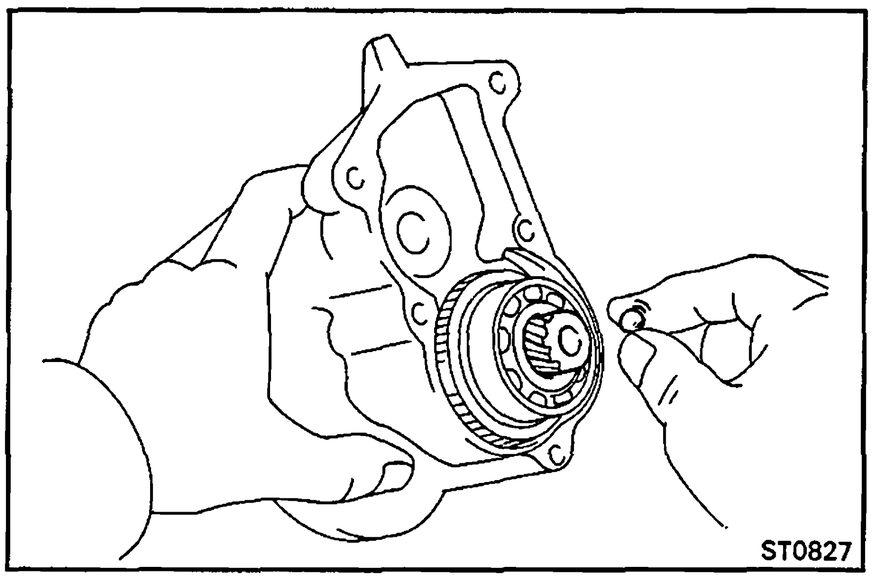

3. INSERT STEEL BALL INTO CLUTCH SHAFT HOLE

(a) Apply grease to the steel ball.

(b) Insert the steel ball into the clutch shaft hole.

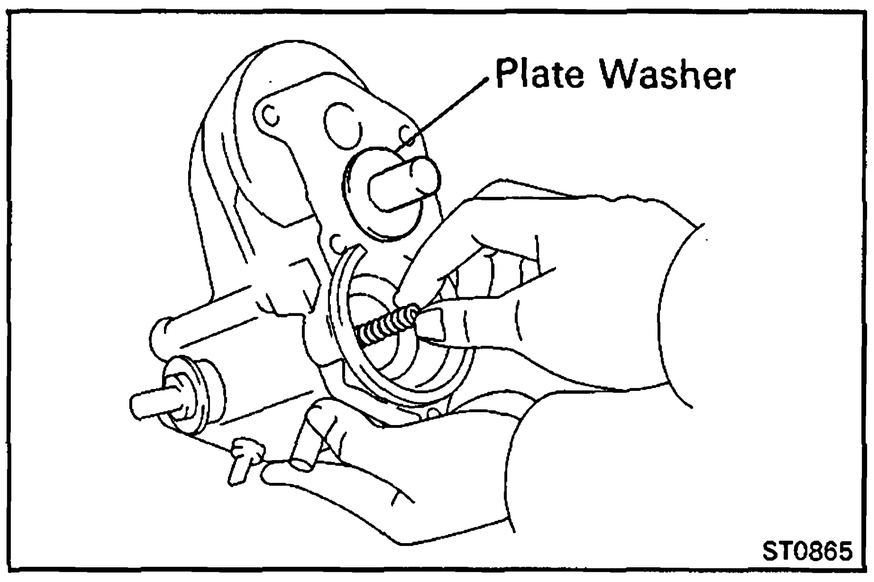

4. INSTALL GEAR, CLUTCH ASSEMBLY AND STARTER HOUSING

(a) Apply grease to the return spring.

(b) Insert the return spring into the magnetic switch hole.

(c) Install the plate washer to the magnetic switch.

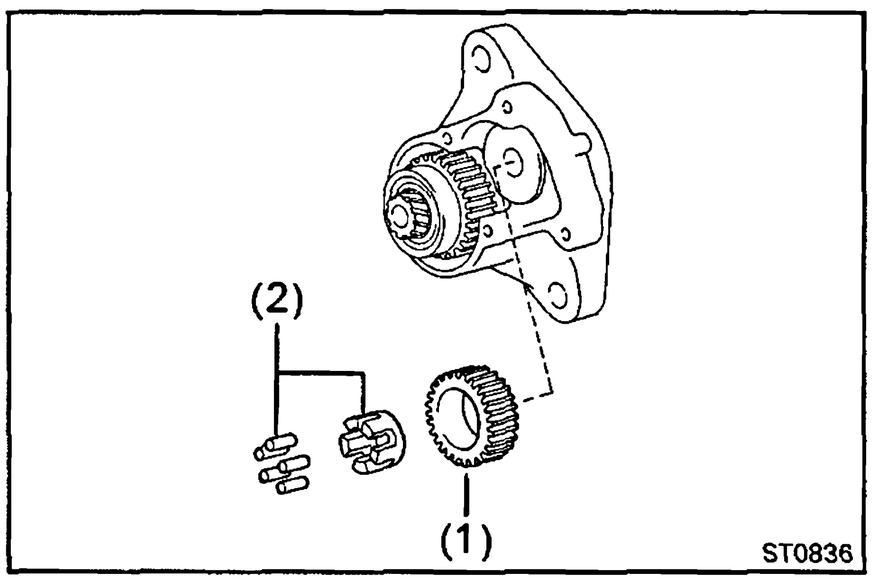

(d) Install the following parts to the starter housing:

(1) Idler gear

(2) Bearing

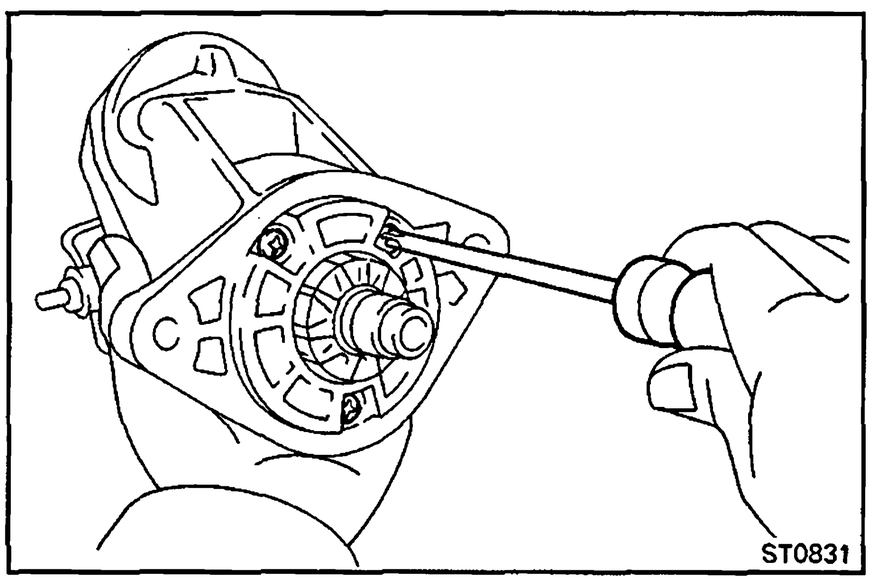

(e) Assemble the starter housing and magnetic switch with the three screws.

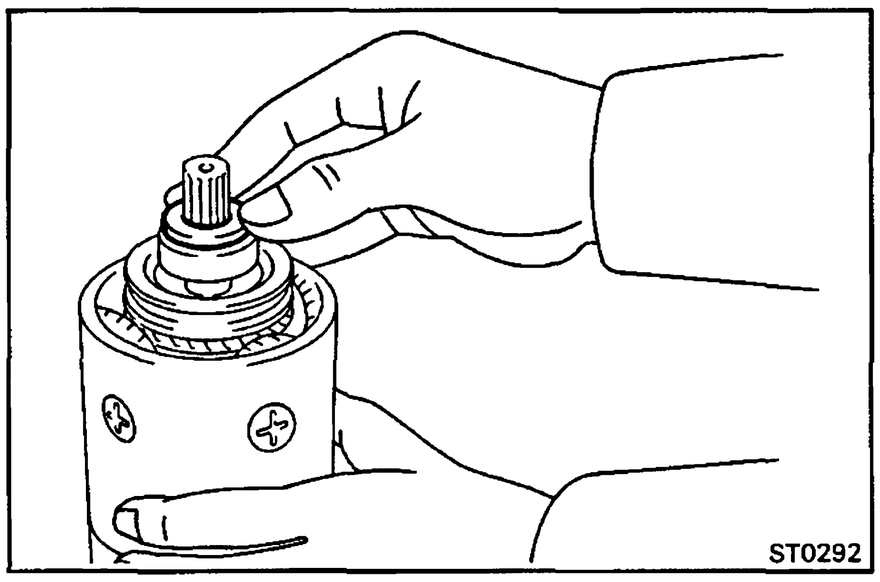

5. INSTALL FIELD FRAME AND ARMATURE ASSEMBLY

(a) Install a new felt washer to the armature.

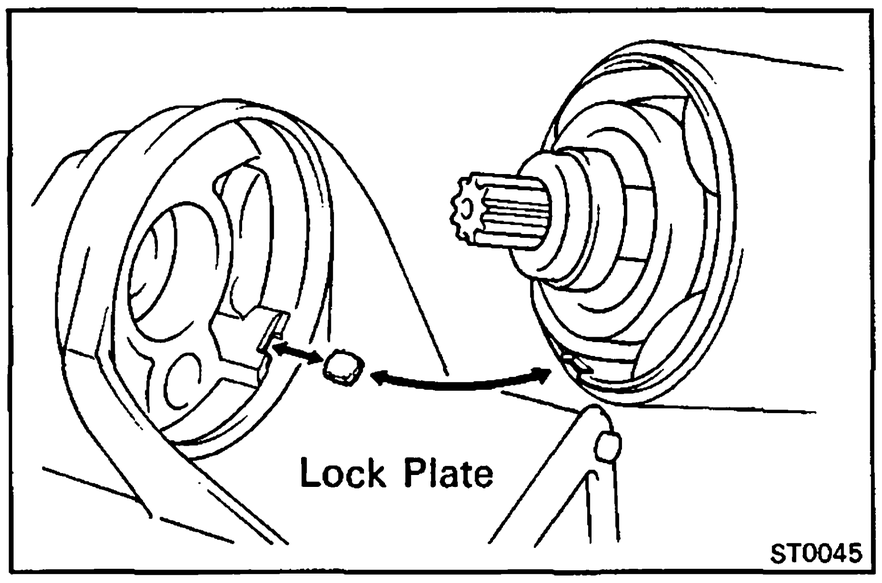

(b) Install the lock plate to the cutout portion of the magnetic switch.

(c) Align the lock plate with the cutout portion of the field frame.

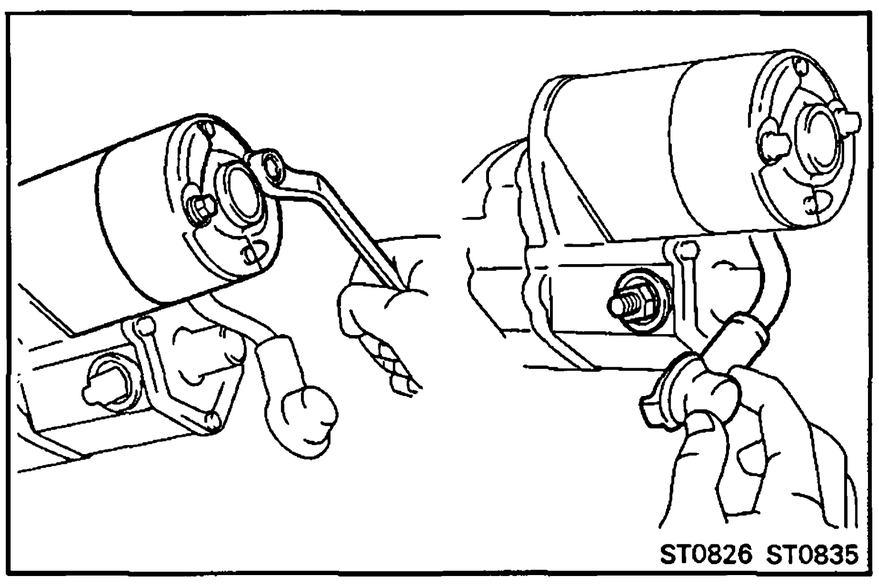

(d) Install the field frame and armature assembly with two new O-rings, the two plate washers, spring washers and two through bolts.

(e) Connect the lead wire to terminal C, and install the spring washer and nut.

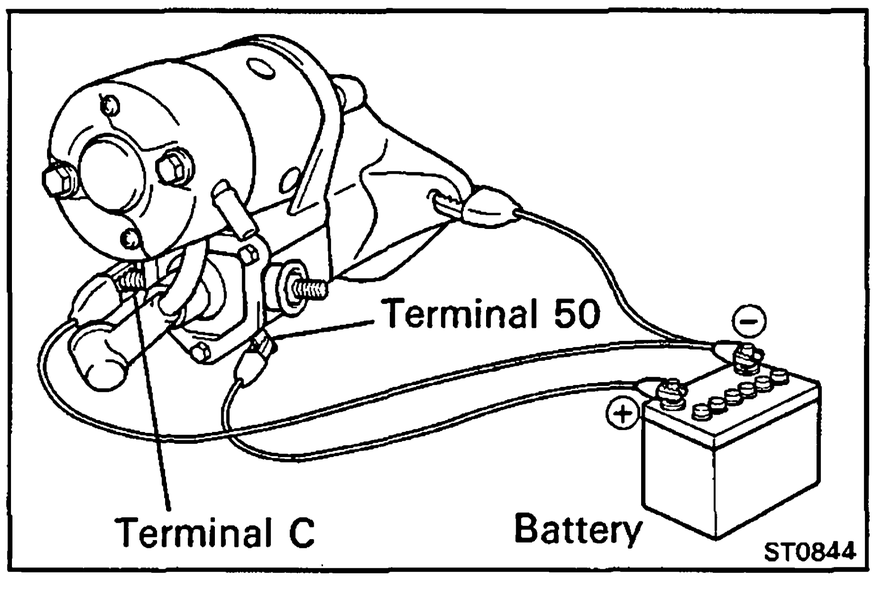

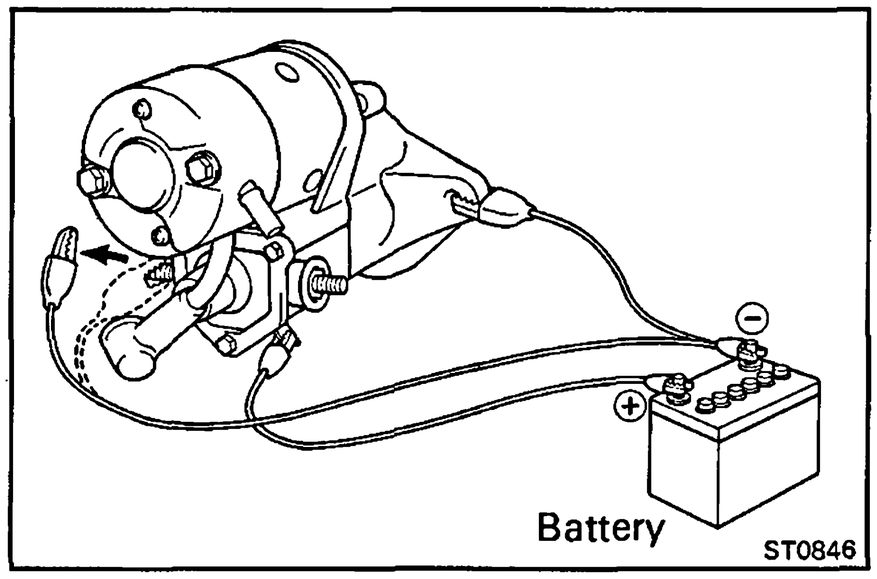

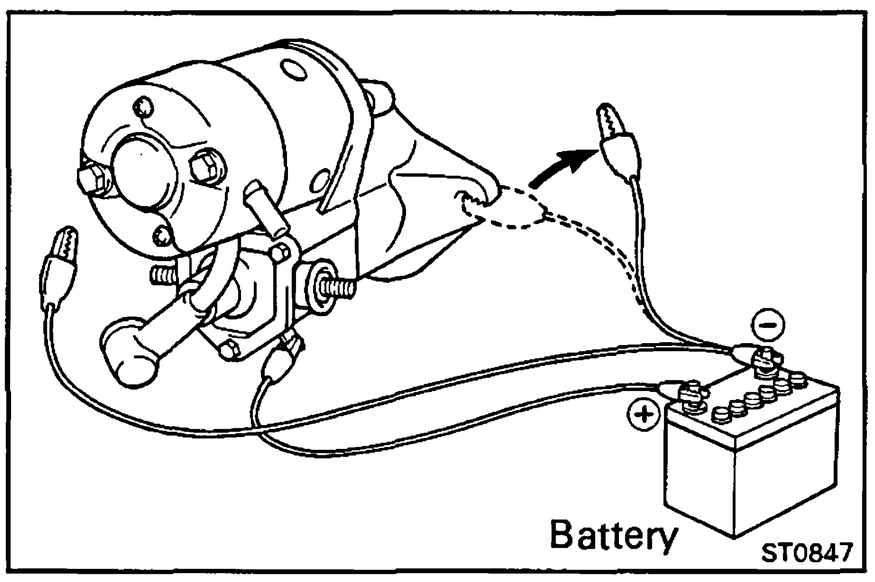

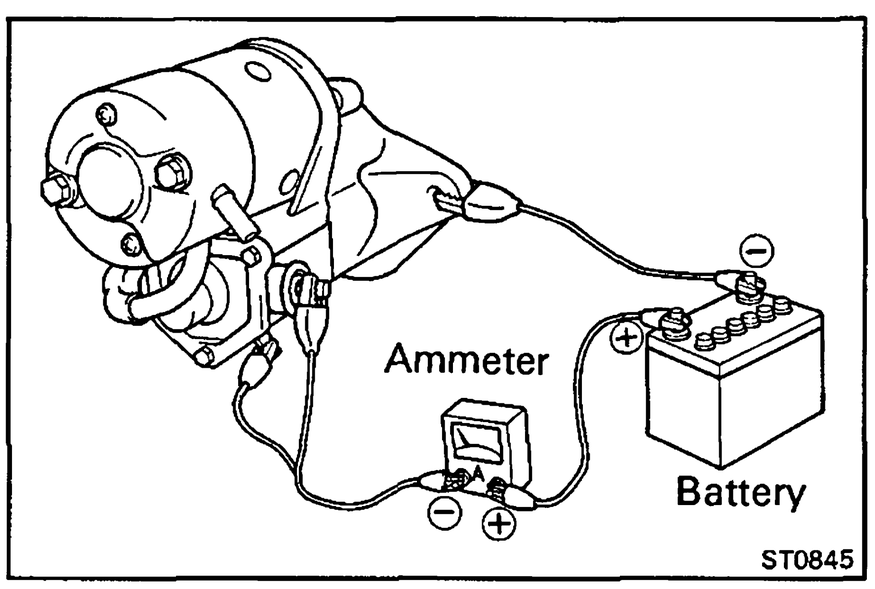

PERFORMANCE TEST OF STARTER

NOTICE: These tests must be performed within 3 to 5 seconds to avoid burning out the coil.

1. PERFORM PULL-IN TEST

(a) Disconnect the field coil lead wire from terminal C.

(b) Connect the battery to the magnetic switch as shown. Check that the clutch pinion gear moves outward.

If the clutch pinion gear does not move, replace the magnetic switch assembly.

2. PERFORM HOLD-IN TEST

While connected as above with the clutch pinion gear out, disconnect the negative (–) lead from terminal C. Check that the pinion gear remains out.

If the clutch pinion gear returns inward, replace the magnetic switch assembly.

3. INSPECT CLUTCH PINION GEAR RETURN

Disconnect the negative (–) lead from the switch body. Check that the clutch pinion gear returns inward.

If the clutch pinion gear does not return, replace the magnetic switch assembly.

4. PERFORM NO-LOAD PERFORMANCE TEST

(a) Connect the battery and ammeter to the starter as shown.

(b) Check that the starter rotates smoothly and steadily with the pinion gear moving out. Check that the ammeter shows the specified current.

Specified current:

12 V type	**180 A or less at 11 V**
24 V type	**90 A or less at 23 V**

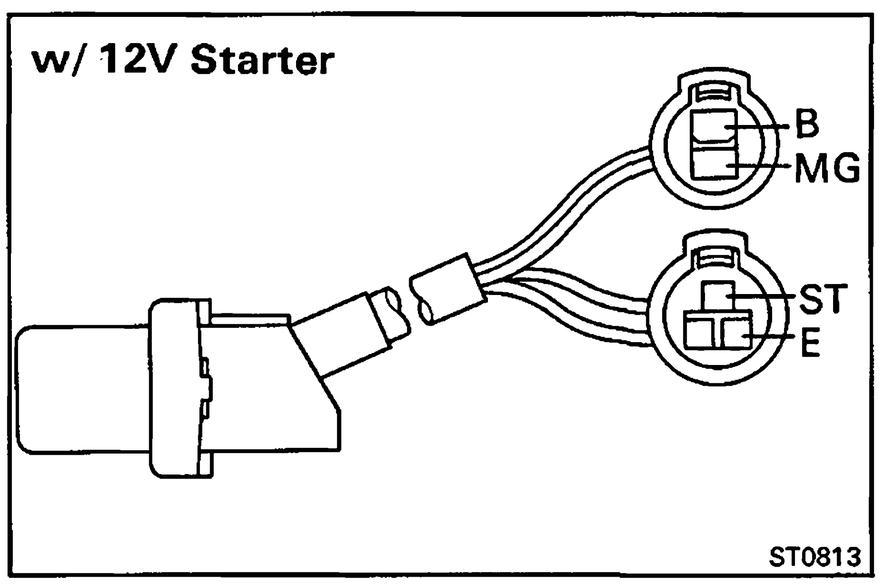

STARTER RELAY (PZJ, HZJ and HDJ)

LOCATION: In the engine compartment on the left side.

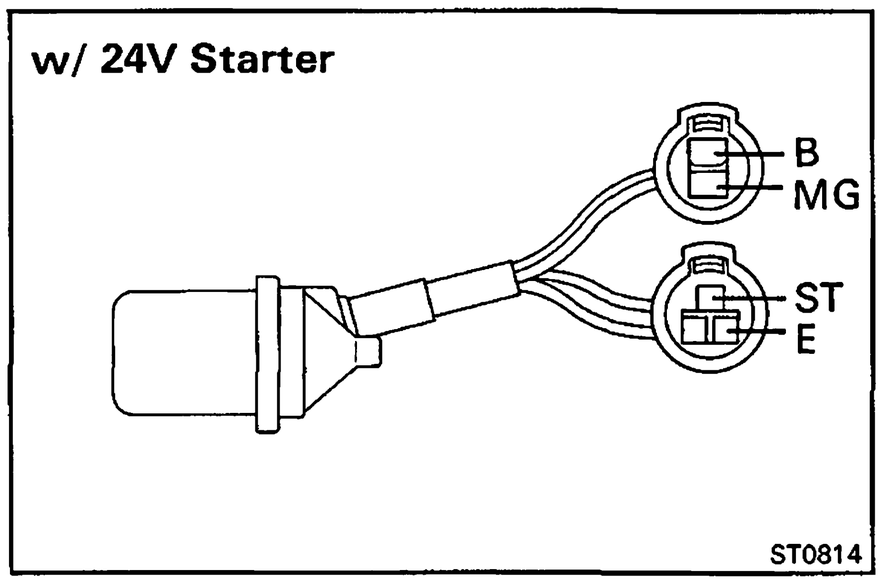

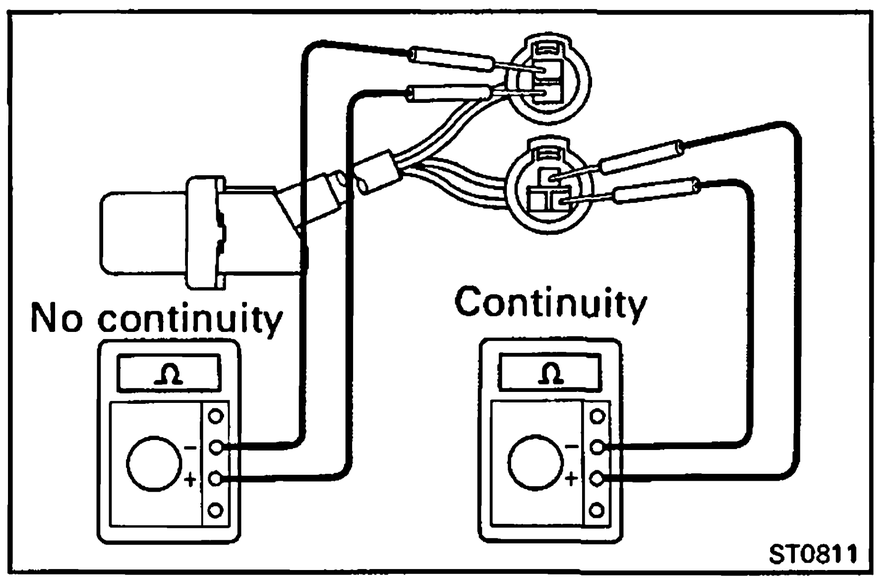

INSPECTION OF STARTER RELAY

1. INSPECT RELAY CONTINUITY

(a) Using an ohmmeter, check that there is continuity between terminals E and ST.

(b) Check that there is no continuity between terminals B and MG.

If continuity is not as specified, replace the relay.

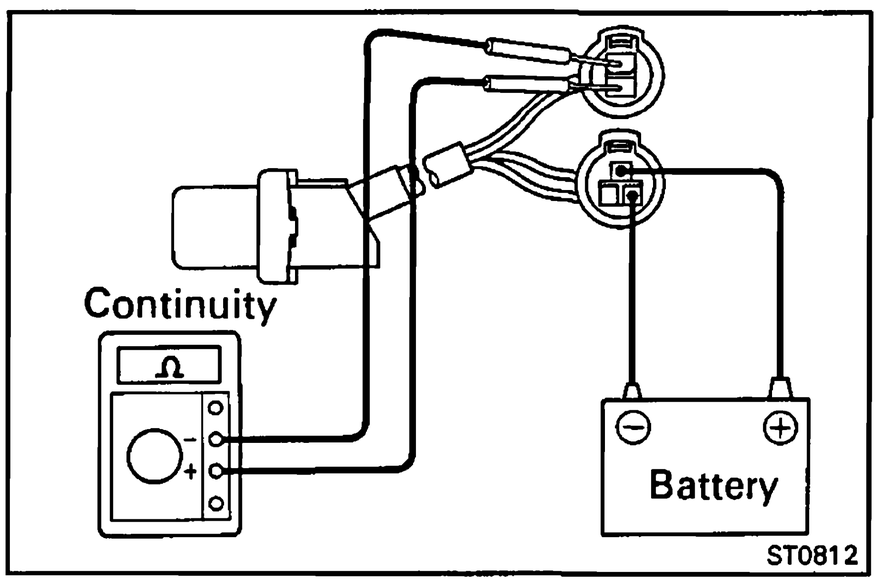

2. INSPECT RELAY OPERATION

(a) Apply battery voltage across terminals E and ST.

NOTICE: If the vehicle has a voltage coverter, perform the check using a 12 V battery.

(b) Using an ohmmeter, check that there is continuity between terminals B and MG.

If operation is not as specified, replace the relay.

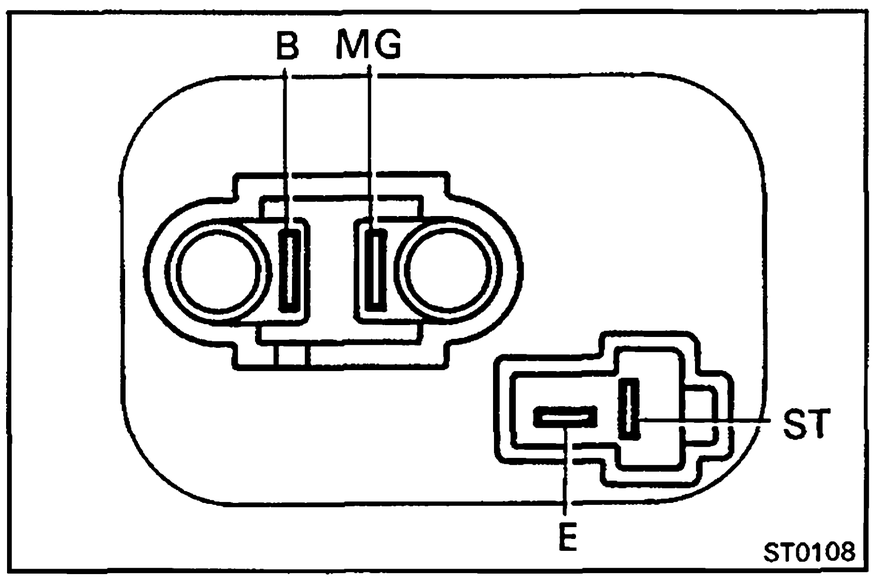

STARTER RELAY (HZB and HDB)

LOCATION: Inside wall adjacent to center door.

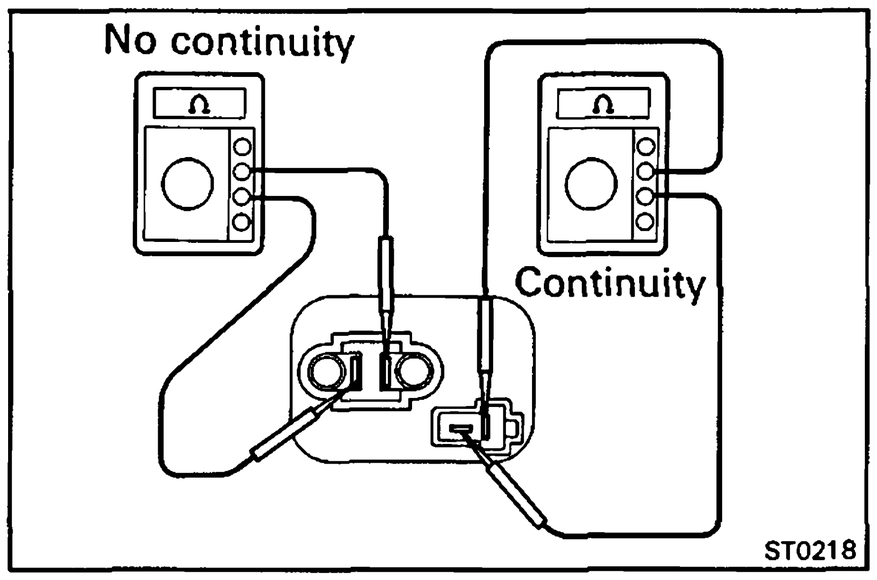

INSPECTION OF STARTER RELAY

1. INSPECT RELAY CONTINUITY

(a) Using an ohmmeter, check that there is continuity between terminals E and ST.

(b) Check that there is no continuity between terminals B and MG.

If continuity is not as specified, replace the relay.

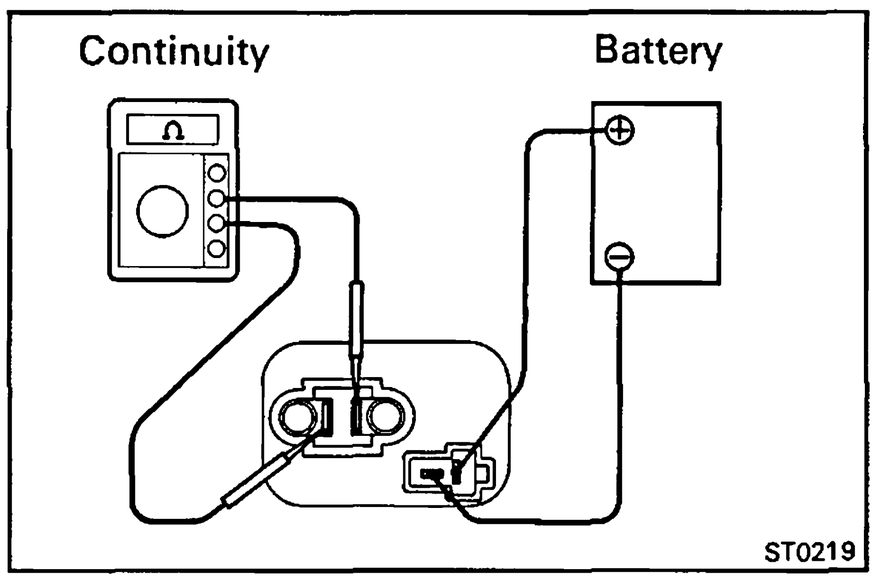

2. INSPECT RELAY OPERATION

(a) Apply battery voltage across terminals E and ST.

(b) Using an ohmmeter, check that there is continuity between terminals B and MG.

If operation is not as specified, replace the relay.

VOLTAGE CONVERTER TIMER (HZJ80 and HDJ80) (w/ 24 V Starter)

LOCATION: In the cowl on the passenger's side.

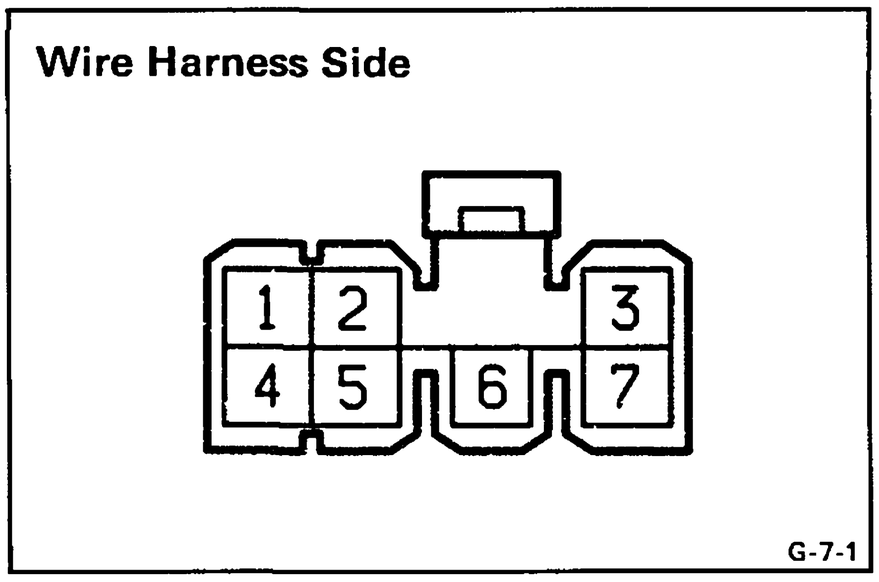

INSPECTION OF VOLTAGE CONVERTER TIMER

INSPECT VOLTAGE CONVERTER TIMER

Disconnect the connector from the voltage converter timer, and check the connector on the wire harness side as shown in the following chart.

Check for	Tester connection	Condition	Specified value
Voltage	1 – Ground	Turn starter switch OFF	No voltage
		Turn starter switch START	Battery voltage
Voltage	2 – Ground	Turn starter switch OFF	No voltage
		Turn starter switch ON	Battery voltage
Voltage	3 – Ground	Turn starter switch OFF	No voltage
		Turn starter switch START	Battery voltage
Continuity	4 – Ground	–	Continuity
Continuity	5 – 6	–	Continuity
Continuity	7 – Ground	–	Continuity

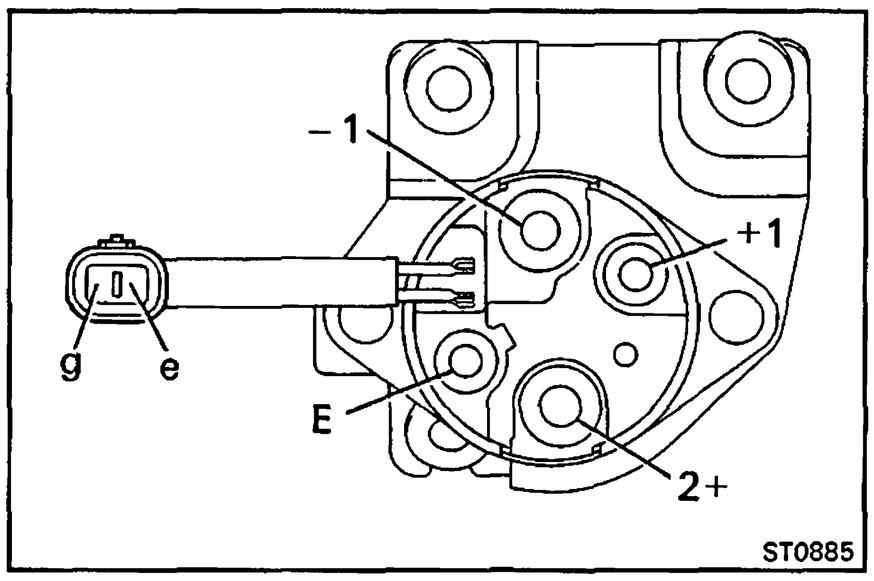

VOLTAGE CONVERTER RELAY (HZJ80 and HDJ80) (w/ 24 V Starter)

LOCATION: In the engine compartment on the left side.

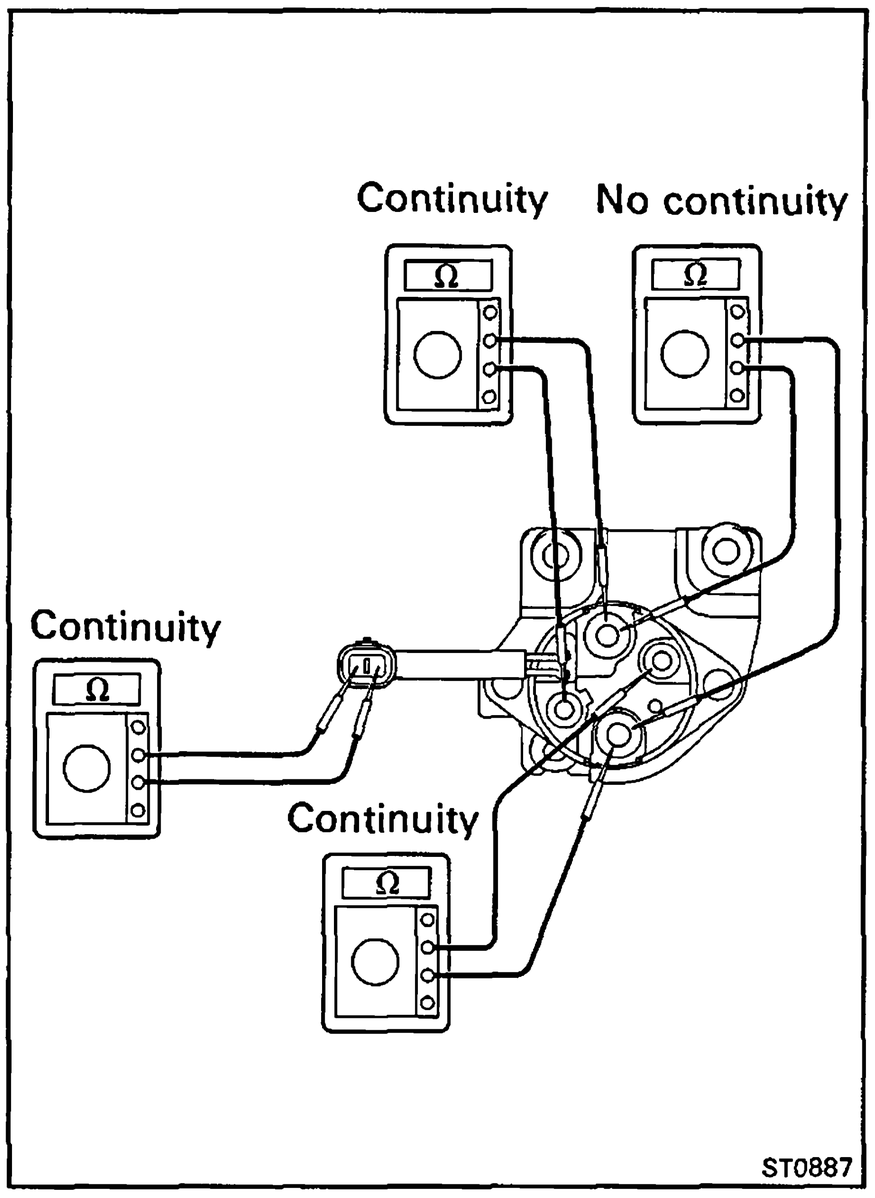

INSPECTION OF VOLTAGE CONVERTER RELAY

1. INSPECT RELAY CONTINUITY

(a) Using an ohmmeter, check that there is continuity between terminals e and g.

(b) Check that there is continuity between terminals 1 – and E.

(c) Check that there is continuity between terminals 1+ and 2+.

(d) Check that there is no continuity between terminals 1 – and 2+.

If continuity is not as specified, replace the relay.

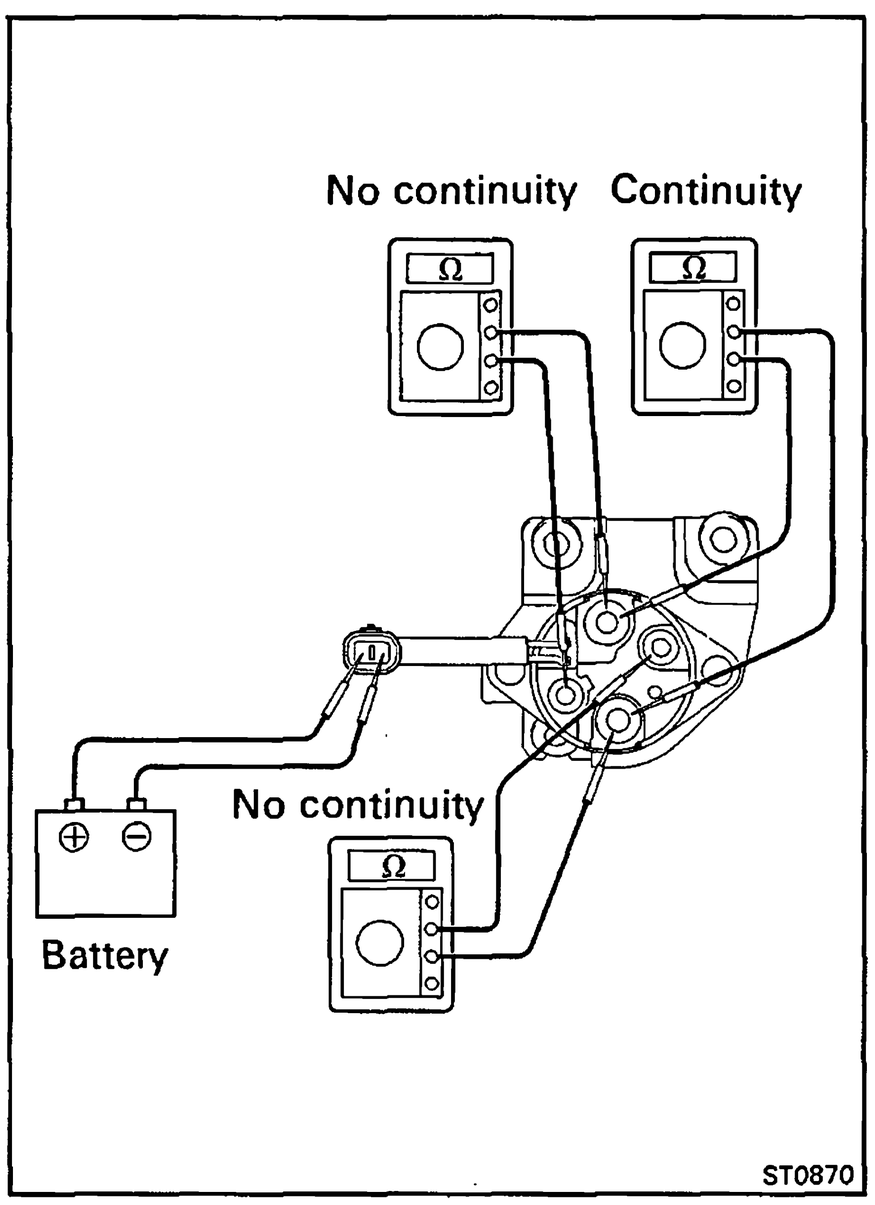

2. INSPECT RELAY OPERATION

(a) Apply battery voltage across terminals e and g.

(b) Using an ohmmeter, check that there is continuity between terminals 1 – and 2+.

(c) Check that there is no continuity between terminals 1+ and 2+.

(d) Check that there is no continuity between terminals 1 – and E.

If operation is not as specified, replace the relay.

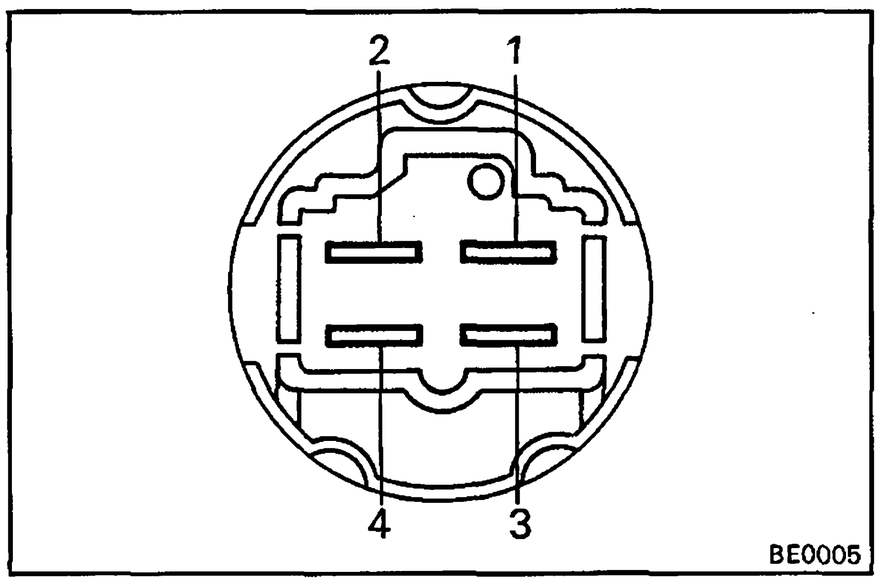

24 V HOLD WARNING RELAY (HZJ80 and HDJ80) (w/ 24 V Starter)

LOCATION: In the driver's cowl side.

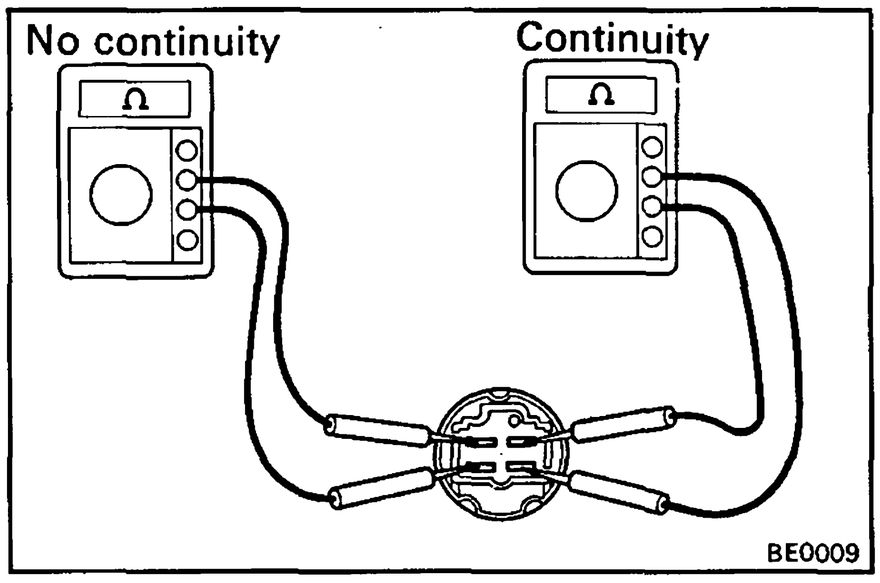

INSPECTION OF 24 V HOLD WARNING RELAY

1. **INSPECT RELAY CONTINUITY**
   (a) Using an ohmmeter, check that there is continuity between terminals 1 and 3.
   (b) Check that there is no continuity is not as specified, replace the terminals 2 and 4.

   If continuity is not as specified, replace the relay.

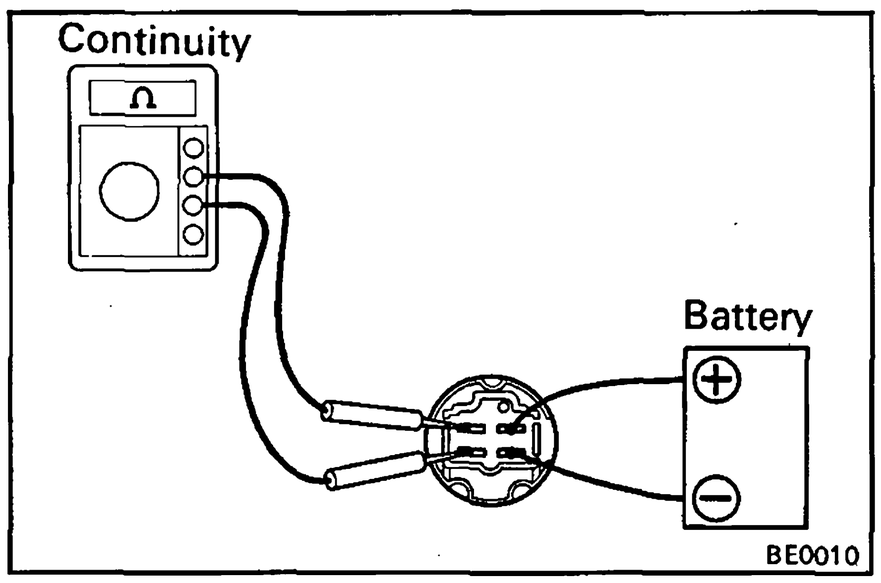

2. **INSPECT RELAY OPERATION**
   (a) Apply battery voltage across terminals 1 and 3.
   (b) Using an ohmmeter, check that there is continuity between terminals 2 and 4.

   If operation is not as specified, replace the relay.

CHARGING SYSTEM

	Page
PRECAUTIONS	CH-2
TROUBLESHOOTING	CH-2
CHARGING SYSTEM CIRCUIT	CH-3
ON-VEHICLE INSPECTION	CH-5
ALTERNATOR	CH-8

PRECAUTIONS

1. **Check that the battery cables are connected to the correct terminals.**
2. **Disconnect the battery cables when the battery is given a quick charge.**
3. **Do not perform tests with a high voltage insulation resistance tester.**
4. **Never disconnect the battery while the engine is running.**

TROUBLESHOOTING

Problem	Possible cause	Remedy	Page
Discharge warning light does not light with starter switch at "ON" and engine not running	Fuse blown	Check fuses	
	Light burned out	Replace light	
	Wiring connection loose	Tighten loose connection	
	IC regulator faulty	Replace IC regulator	CH-8
Discharge warning light does not go out with engine running (battery requires frequent recharging)	Drive belt loose or worn	Adjust or replace drive belt	CH-5
	Battery cables loose, corroded or worn	Repair or replce cables	
	Fuse blown	Check fuse	
	Fusible link blown	Replace fusible link	
	IC regulator or alternator faulty	Check charging system	CH-5
	Wiring faulty	Repair wiring	

CHARGING SYSTEM CIRCUIT

PZJ 70, 73, 75 and HZJ 70, 73, 75

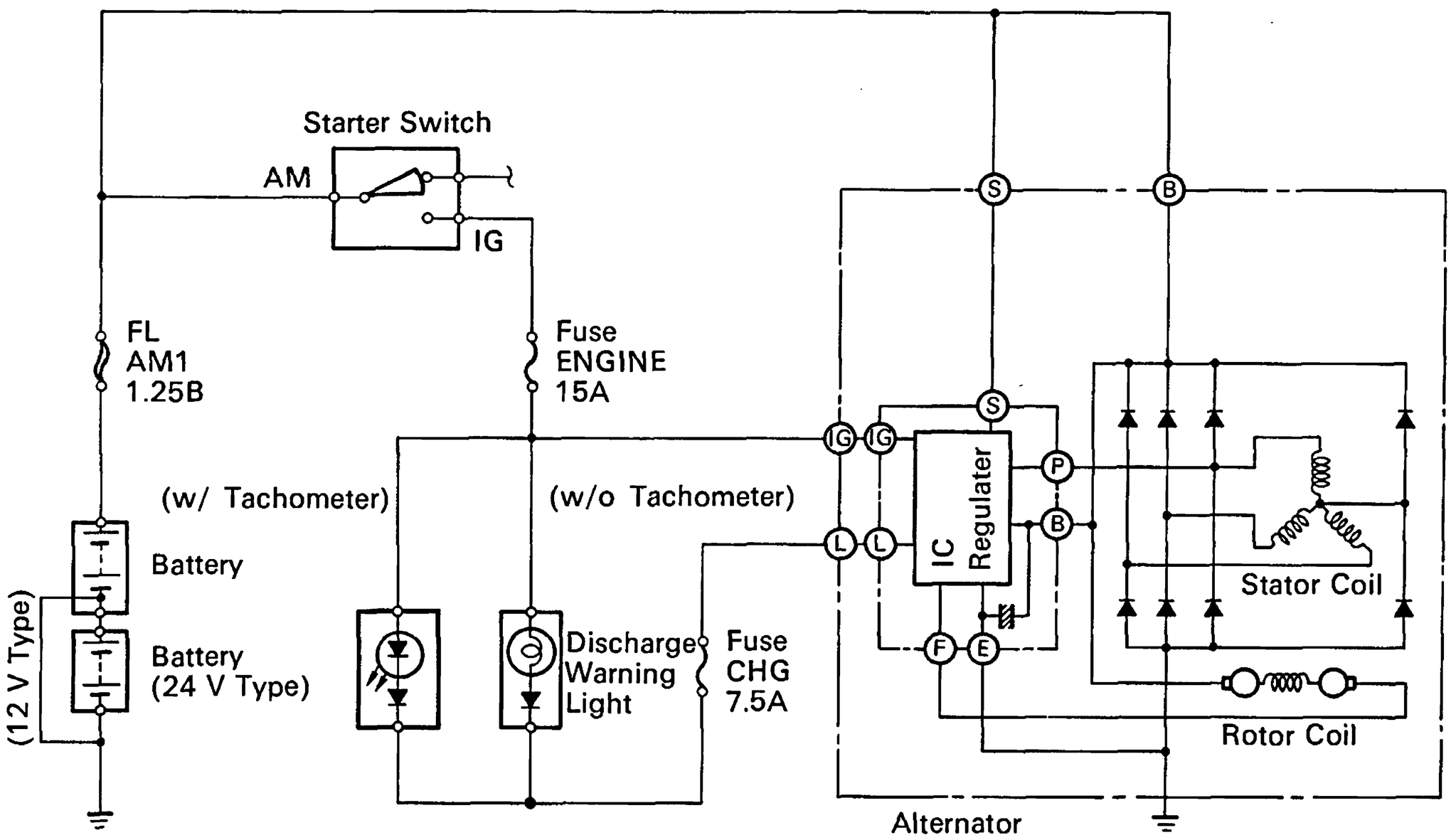

HZJ 80 and HDJ 80

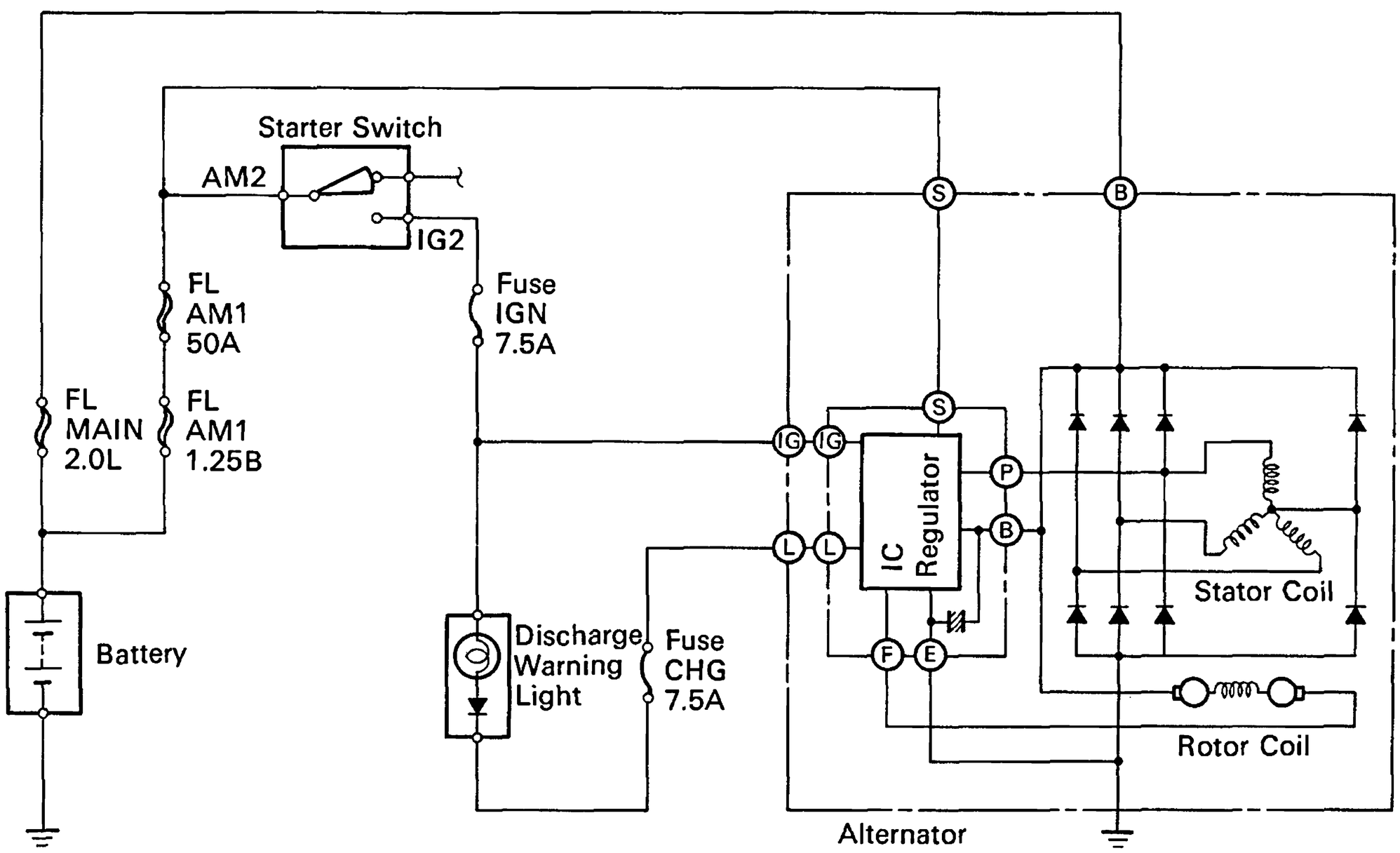

ST0884
ST0883

CHARGING SYSTEM CIRCUIT (Cont'd)

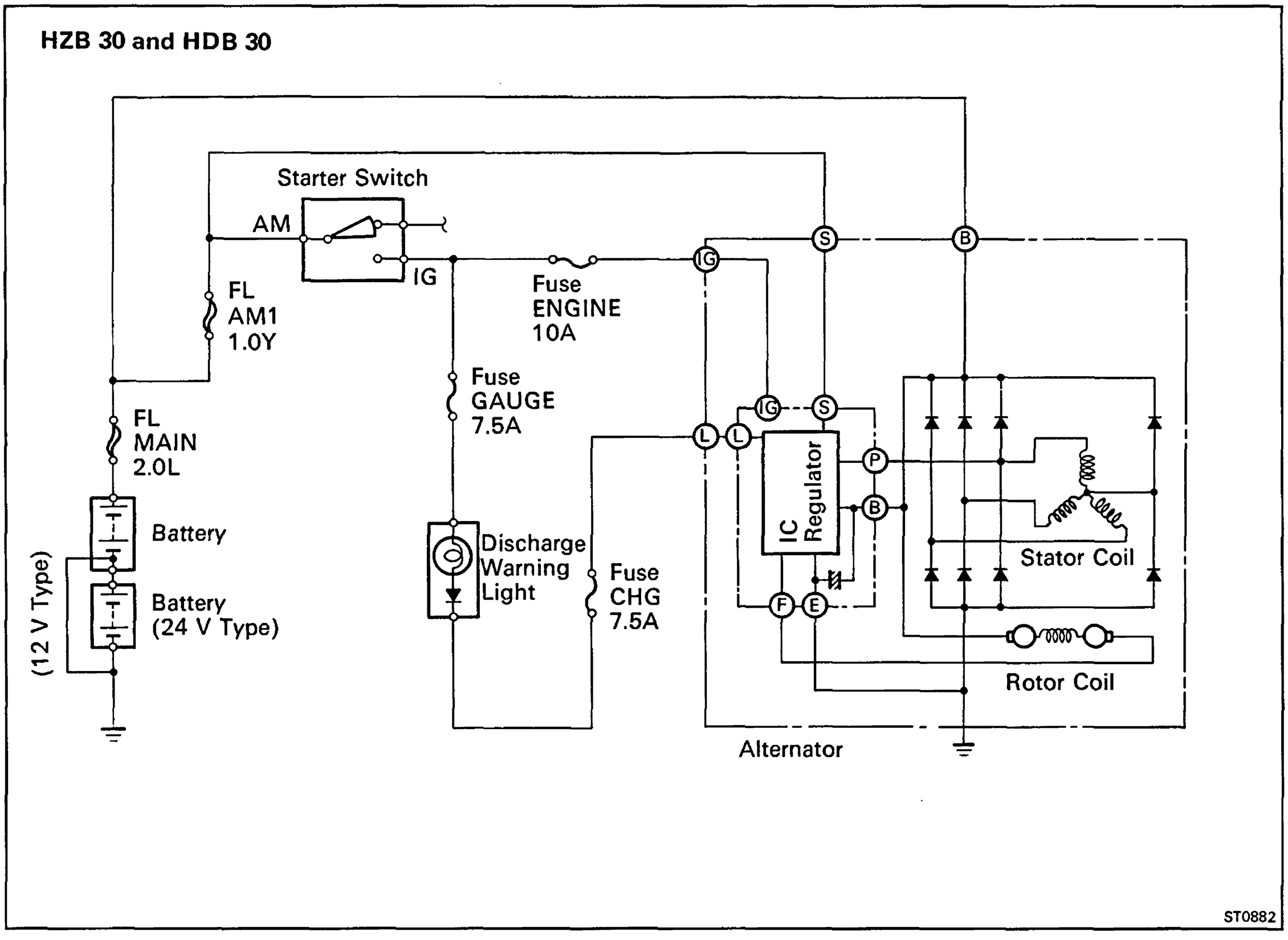

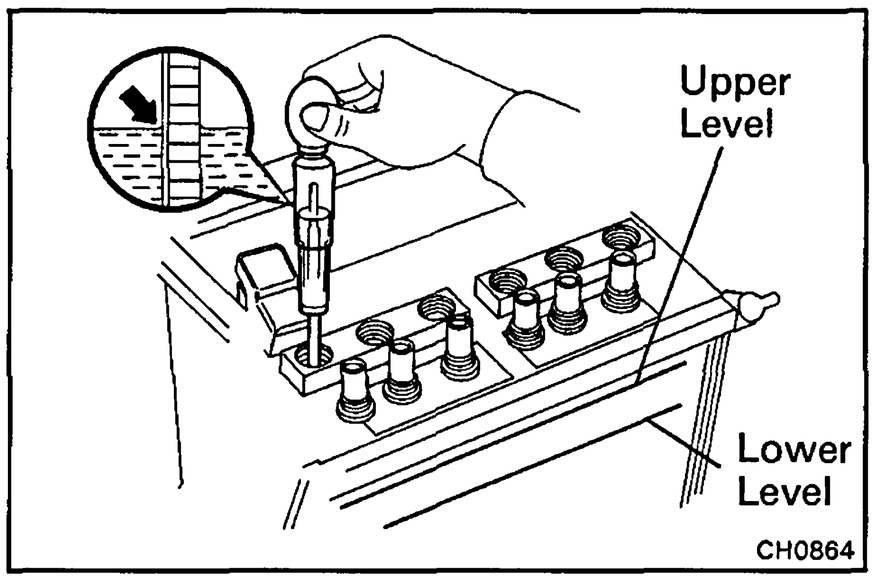

ON-VEHICLE INSPECTION

1. INSPECT BATTERY SPECIFIC GRAVITY AND ELECTROLYTE LEVEL

(a) Check the specific gravity of each cell.

Standard specific gravity:
When fully charged at 20°C (68°F)
1.25 – 1.27 (ex. (95D31R and 95D31L))
1.27 – 1.29 (95D31R and 95D31L)

If not as specified, charge the battery.

(b) Check the electrolyte quantity of each cell.

If insufficient, refill with distilled (or purified) water.

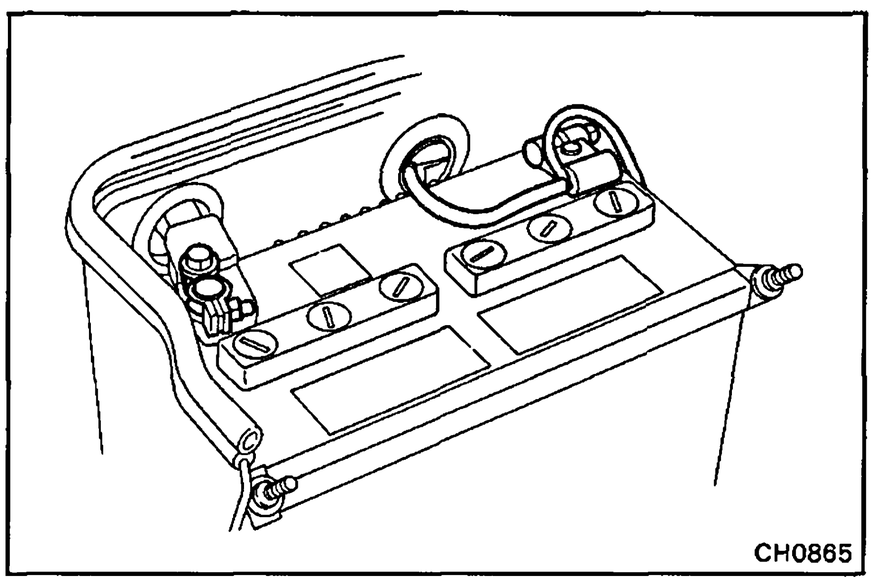

2. CHECK BATTERY TERMINALS, FUSIBLE LINKS AND FUSES

(a) Check that the battery terminals are not loose or corroded.

(b) Check the fusible links and fuses for continuity.

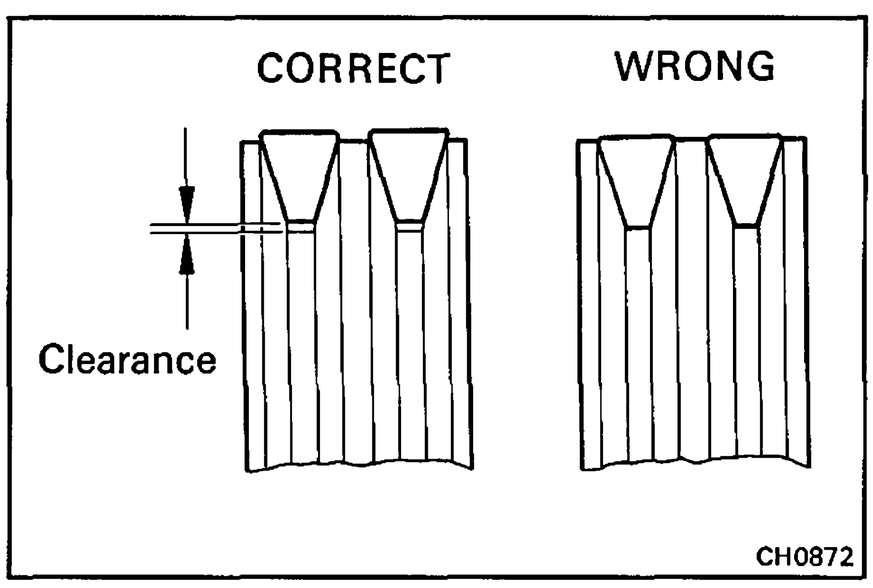

3. INSPECT DRIVE BELTS

(a) Visually check each belt for cracks, oiliness or wear. Check that the belt does not touch the bottom of the pulley groove.

If one belt has any of the above defects, replace both belts.

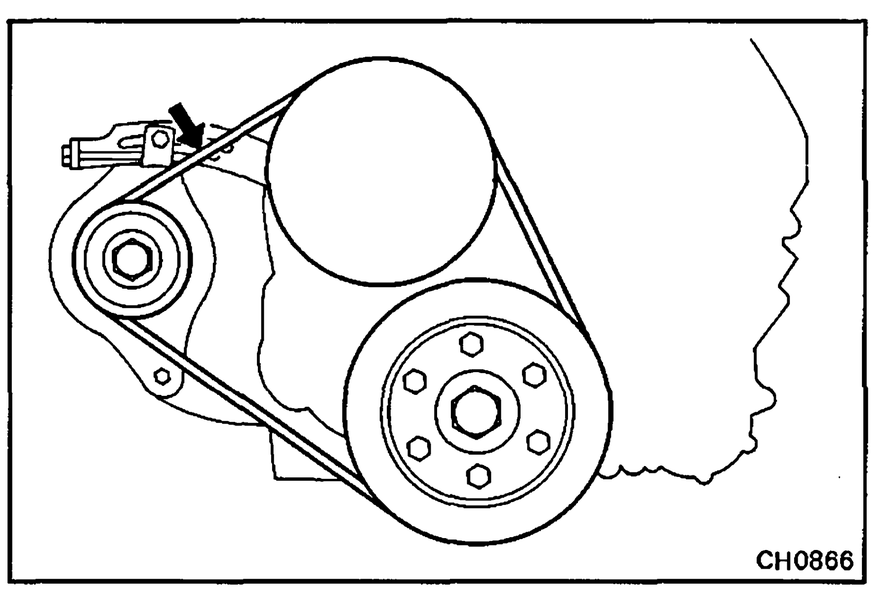

(b) Check the drive belt deflection by pressing on the belt at the points indicated in the illustration with 10 kg (22.0 lb, 98 N) of pressure.

Drive belt deflection:
New belt 6 – 7 mm (0.24 – 0.28 in.)
Used belt 8 – 11 mm (0.31 – 0.43 in.)

If the deflection is not as specified, adjust it.

HINT:

- "New belt" refers to a belt which has been used 5 minutes or less on a running engine.
- "Used belt" refers to a belt which has been used on a running engine for 5 minutes or more.
- After installing a new belt, run the engine for about 5 minutes and recheck the deflection.

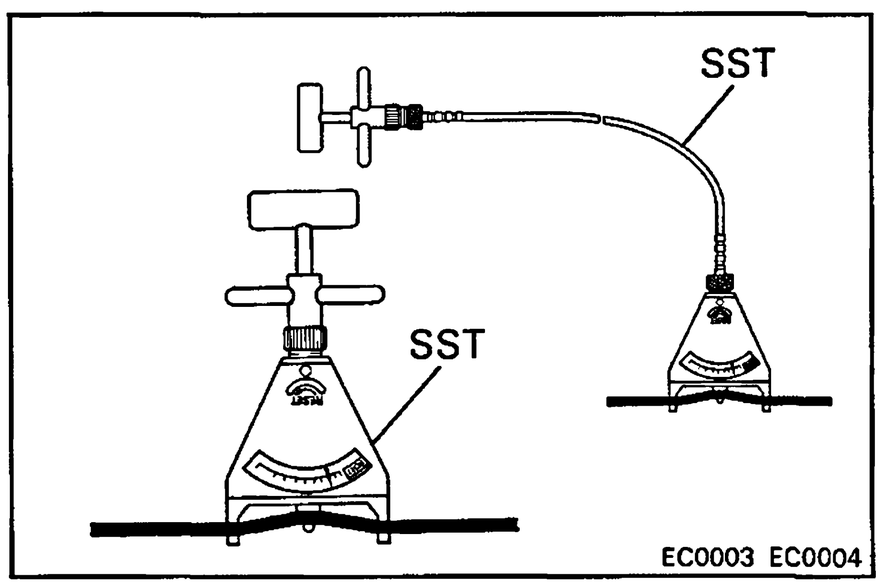

(c) (Reference)
Using SST, measure the drive belt tension.

SST 09216-00020 and 09216-00030

Drive belt tension: **New belt 45 – 55 kg**
Used belt 20 – 35 kg

If the belt tension is not as specified, adjust it.

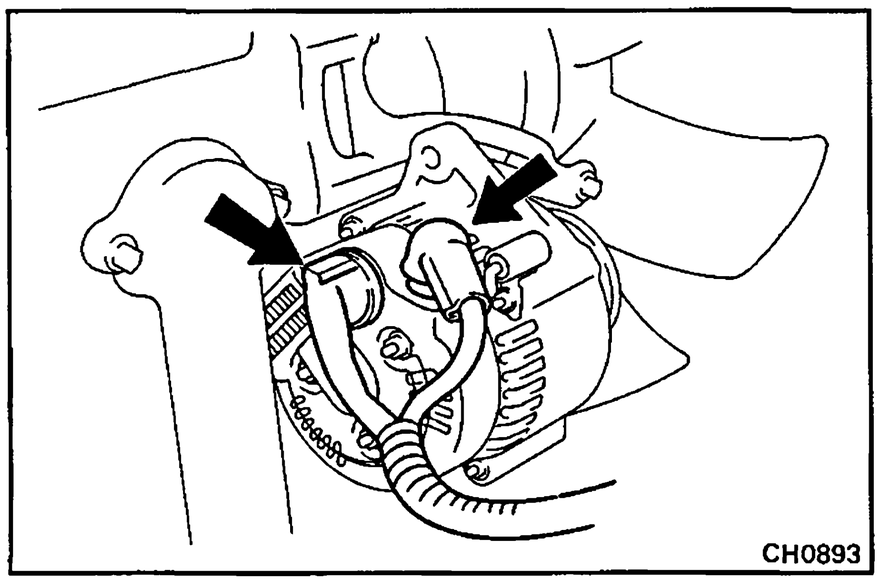

4. VISUALLY CHECK ALTERNATOR WIRING AND LISTEN FOR ABNORMAL NOISES

(a) Check that the wiring is in good condition.

(b) Check that there is no abnormal noise from the alternator while the engine is running.

5. INSPECT DISCHARGE WARNING LIGHT CIRCUIT

(a) Warm up the engine and then turn it off.

(b) Turn off all accessories.

(c) Turn the starter switch to "ON". Check that the discharge warning light is lit.

(d) Start the engine. Check that the light goes out.

If the light does not operate as specified, troubleshoot the discharge light circuit.

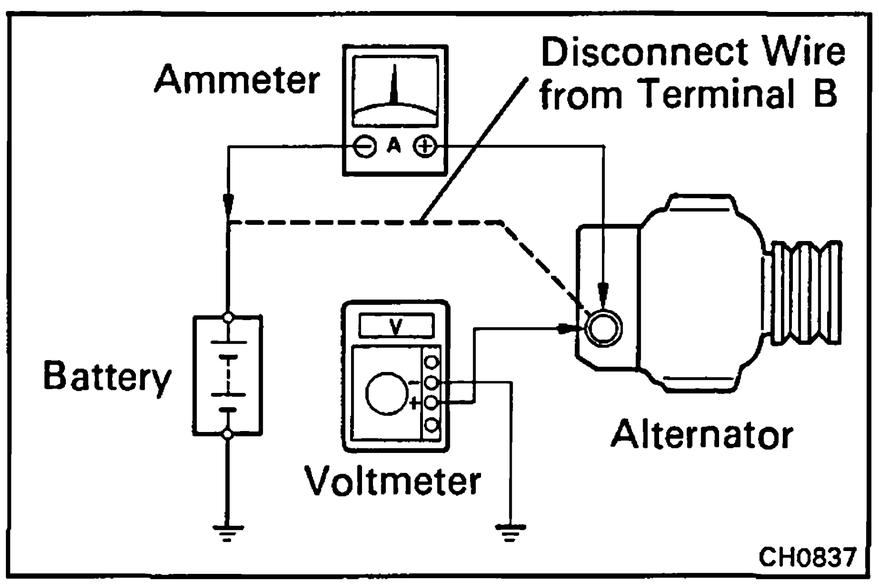

6. INSPECT CHARGING CIRCUIT WITHOUT LOAD

HINT: If a battery/alternator tester is available, connect the tester to the charging circuit as per manufacturer's instructions.

(a) If a tester is not available, connect a voltmeter and ammeter to the charging circuit as follows:

- Disconnect the wire from terminal B of the alternator and connect it to the negative (–) lead of the ammeter.
- Connect the positive (+) lead of the ammeter to terminal B of the alternator.
- Connect the positive (+) lead of the voltmeter to terminal B of the alternator.
- Ground the negative (–) lead of the voltmeter.

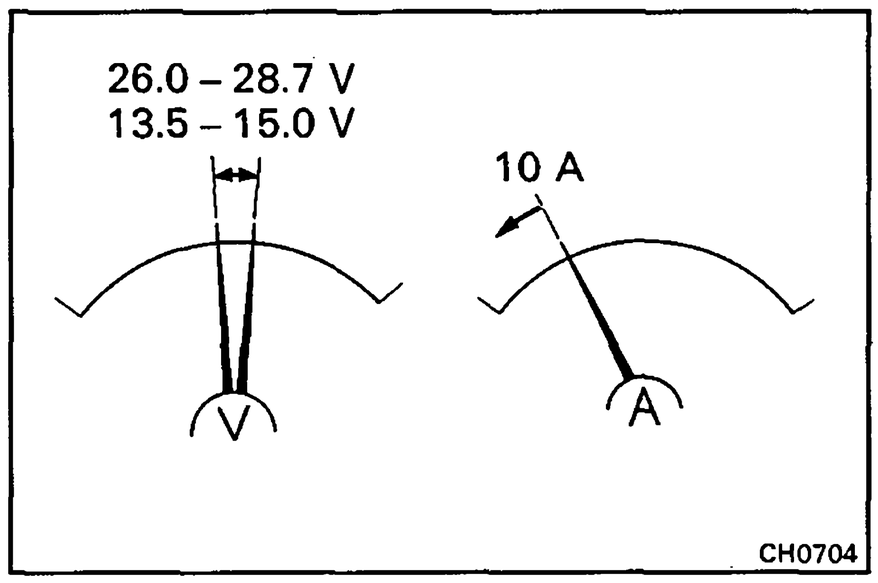

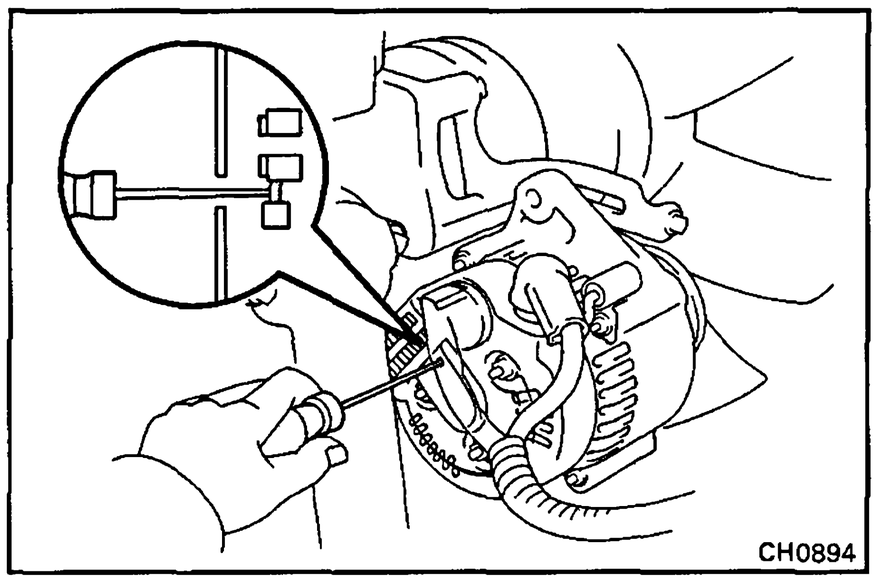

(b) Check the charging circuit as follows:
With the engine running from idling to 2,000 rpm, check the reading on the ammeter and voltmeter.

Standard amperage: 10 A or less

Standard voltage:

12 V type	**14.0 – 15.0 V at 25°C (77°F)**
	13.5 – 14.3 V at 135°C (275°F)
24 V type	**27.7 – 28.7 V at 25°C (77°F)**
	26.0 – 28.7 V at 135°C (275°F)

If the voltmeter reading is more than standard voltage, replace the IC regulator.

If the voltmeter reading is less than standard voltage, check the IC regulator and alternator as follows:

- With terminal F grounded, start the engine and check the voltmeter reading of terminalB.
- If the voltmeter reading is greater than standard voltage, replace the IC regulator.
- If the voltmeter reading is less than standard voltage, check the alternator.

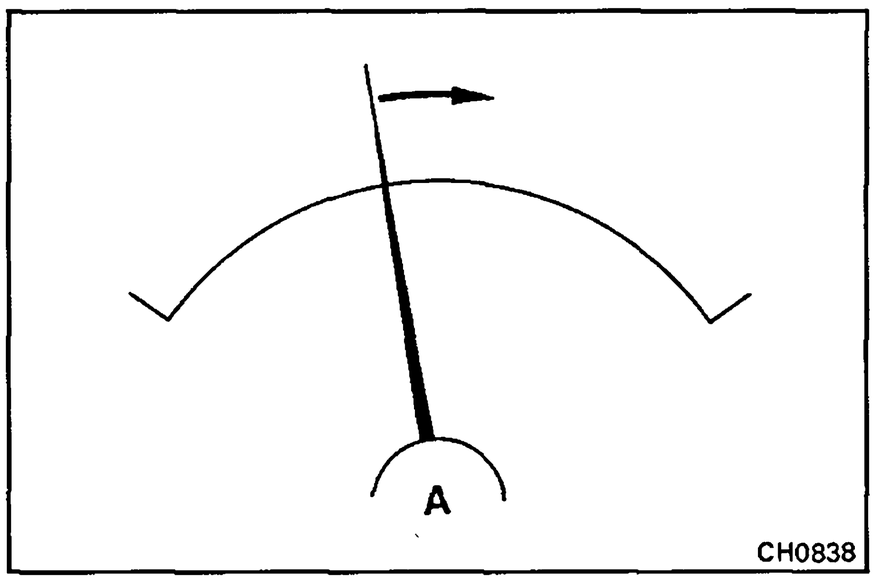

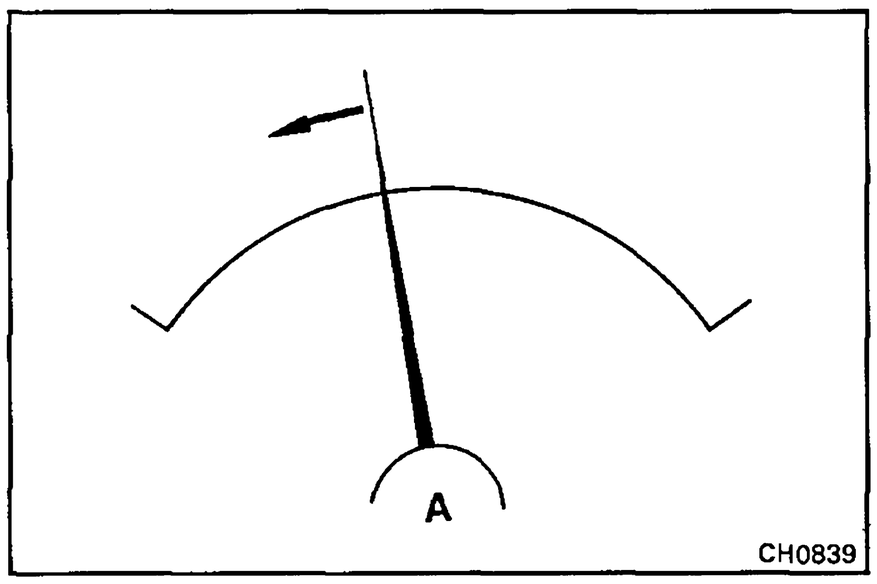

7. INSPECT CHARGING CIRCUIT WITH LOAD

(a) With the engine running at 2,000 rpm, turn on the high beam headlights and place the heater blower switch at "HI".

(b) Check the reading on the ammeter.

Standard amperage:

12 V 45, 55, 60, 80 A type	**30 A or more**
12 V 100 A type	**40 A or more**
24 V 30 A type	**15 A or more**
24 V 55 A type	**30 A or more**

If the ammeter reading is less than standard amperage, repair the alternator. (See page CH-8)

HINT: With the battery fully charged, the indication will sometimes be less than standard amperage.

ALTERNATOR

COMPONENTS

Type A

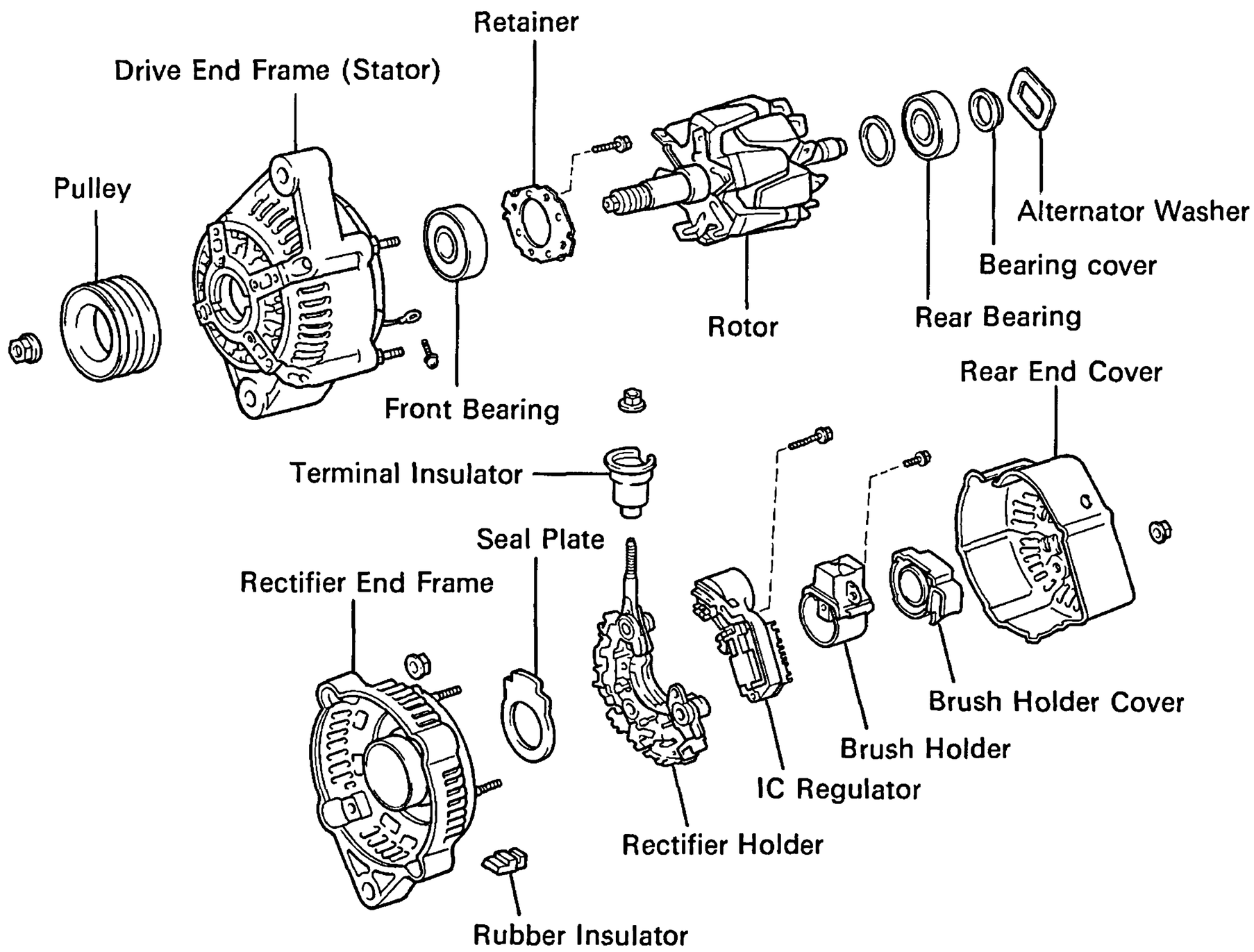

Type B

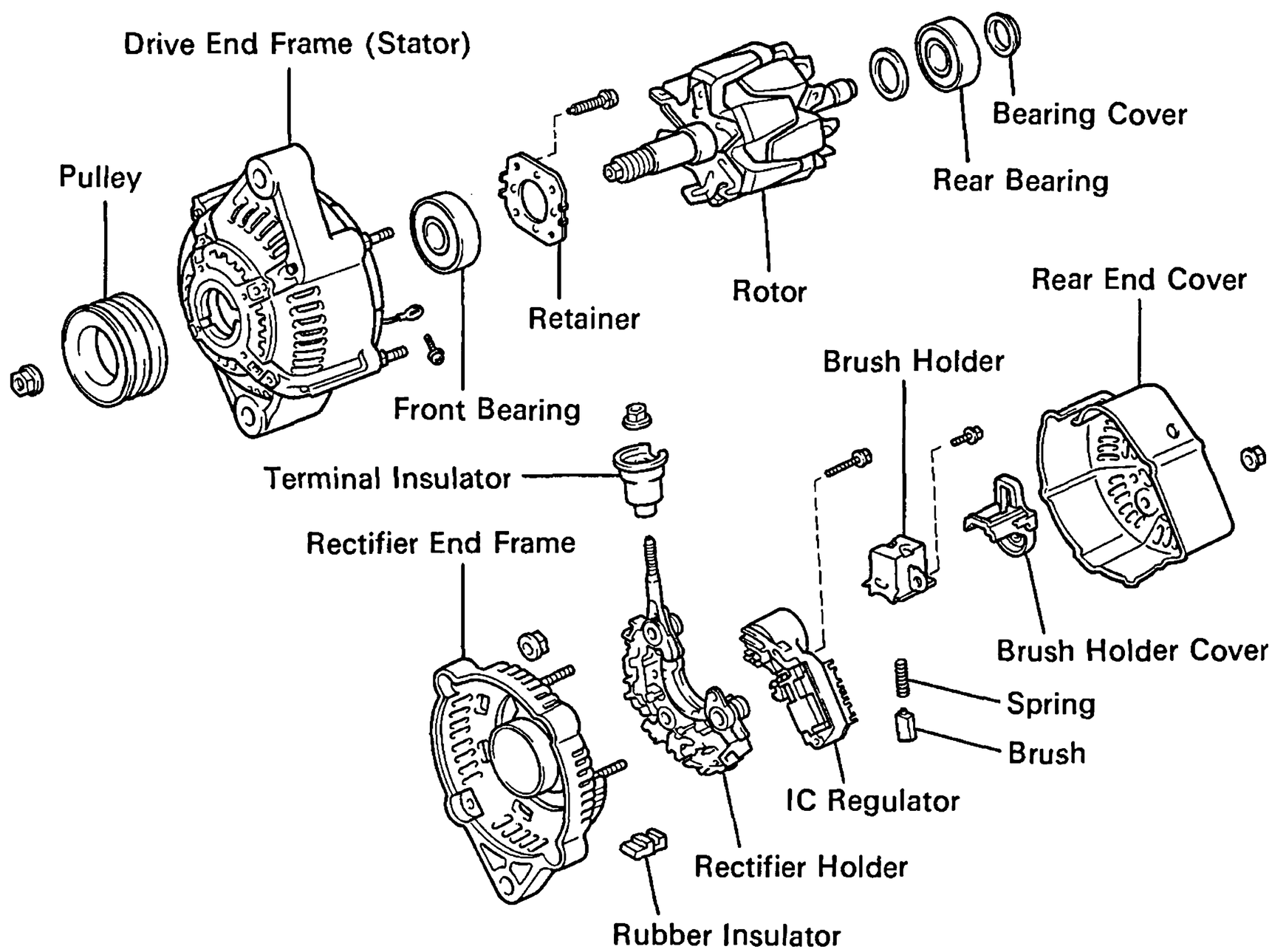

CH0857
CH0858

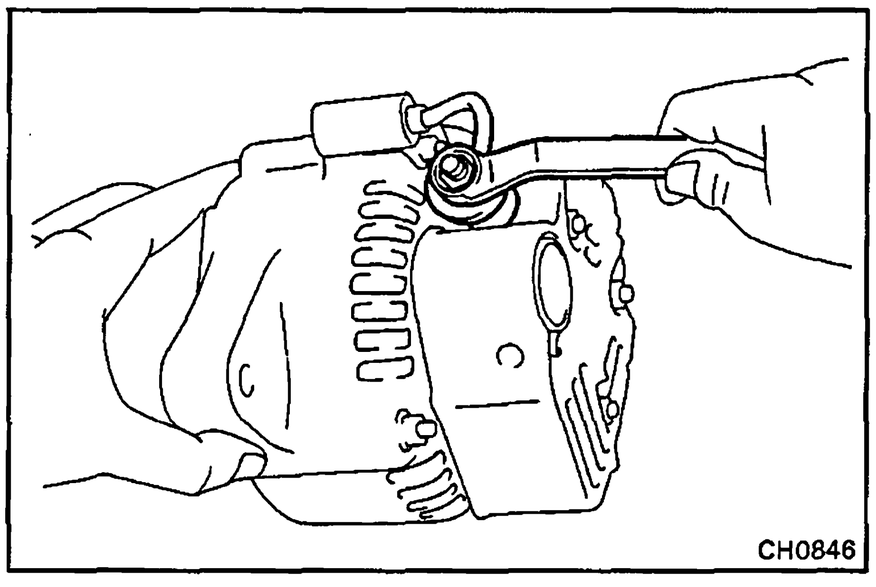

DISASSEMBLY OF ALTERNATOR

(See page CH-8)

1. REMOVE REAR END COVER

(a) (PZJ, HZJ and HDJ)
Remove the nut, condenser lead wire and terminal insulator.

(b) (HZB and HDB)
Remove the nut and terminal insulator.

(c) Remove the three nuts and end cover.

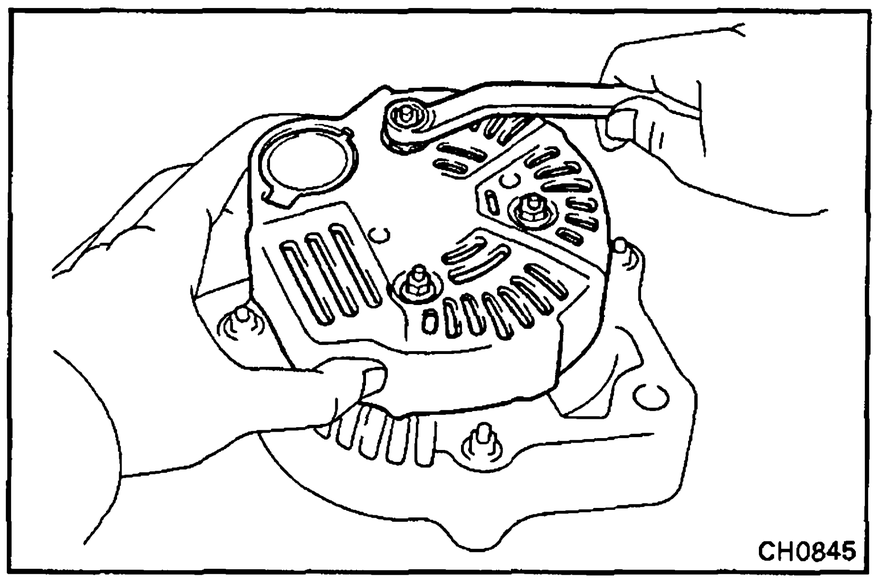

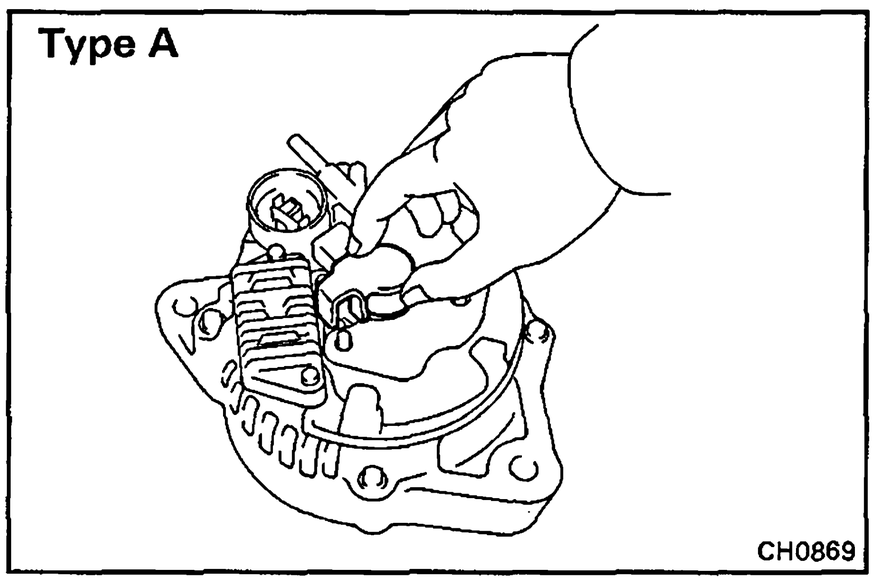

2. REMOVE BRUSH HOLDER AND IC REGULATOR

(a) (Type A)
Remove the brush holder cover from the brush holder.

(b) Remove the five screws, brush holder, holder cover and IC regulator.

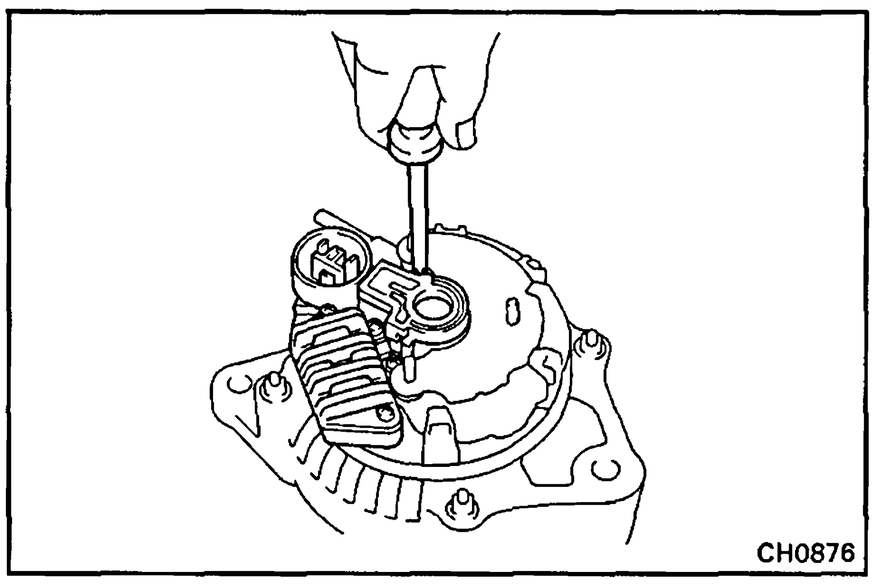

3. REMOVE RECTIFIER HOLDER

(a) Remove the four screws and rectifier holder.

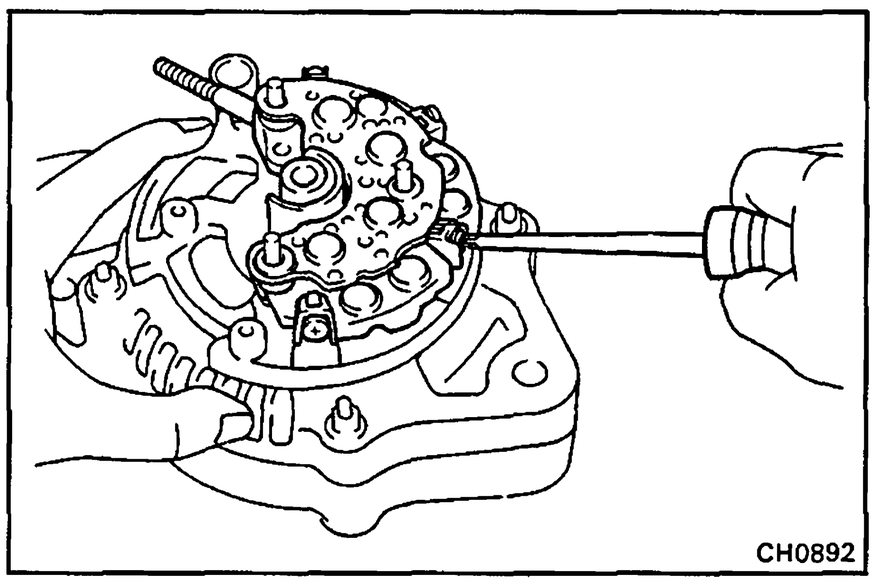

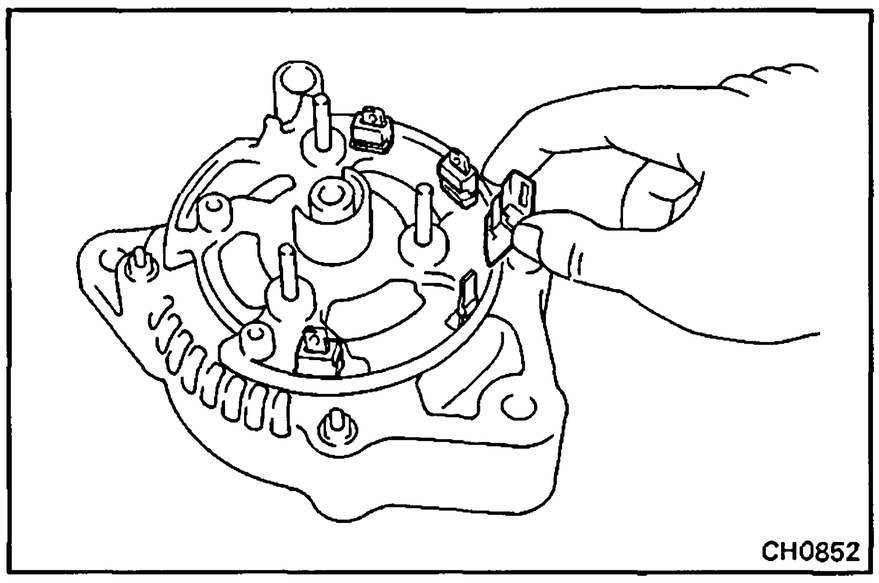

(b) Remove the four rubber insulator.

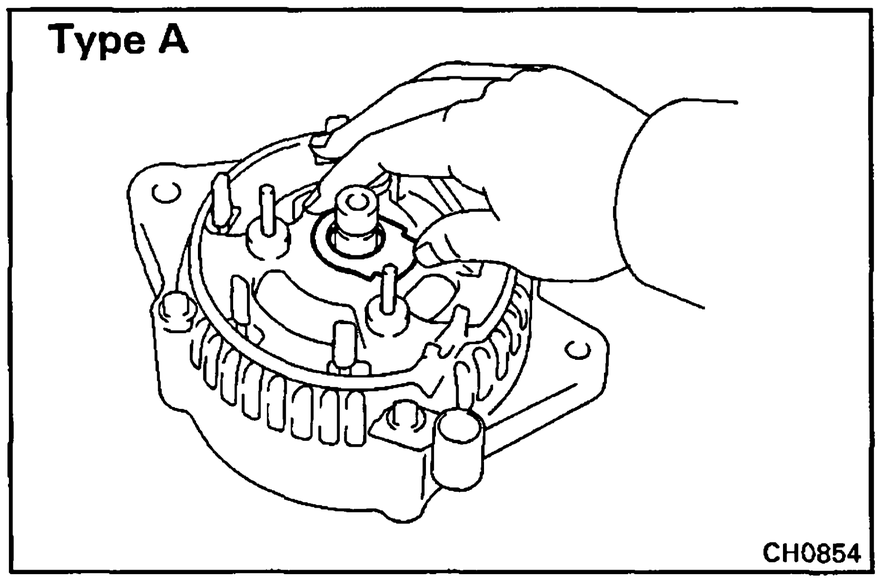

(c) (Type A)
Remove the seal plate.

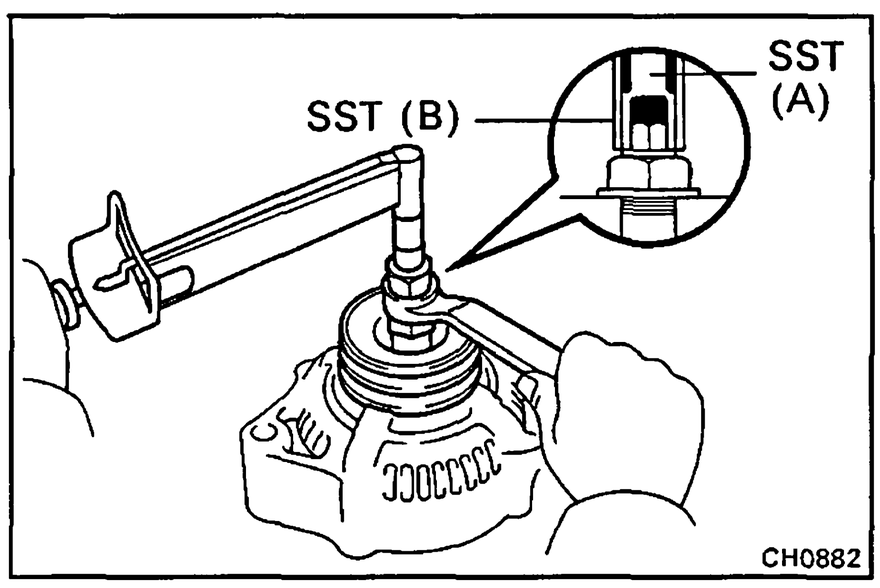

4. REMOVE PULLEY

(a) Hold SST (A) with a torque wrench, and tighten SST (B) clockwise to the specified torque.

SST 09820-63010

Torque: 400 kg-cm (29 ft-lb, 39 N·m)

(b) Check that SST (A) is secured to the rotor shaft.

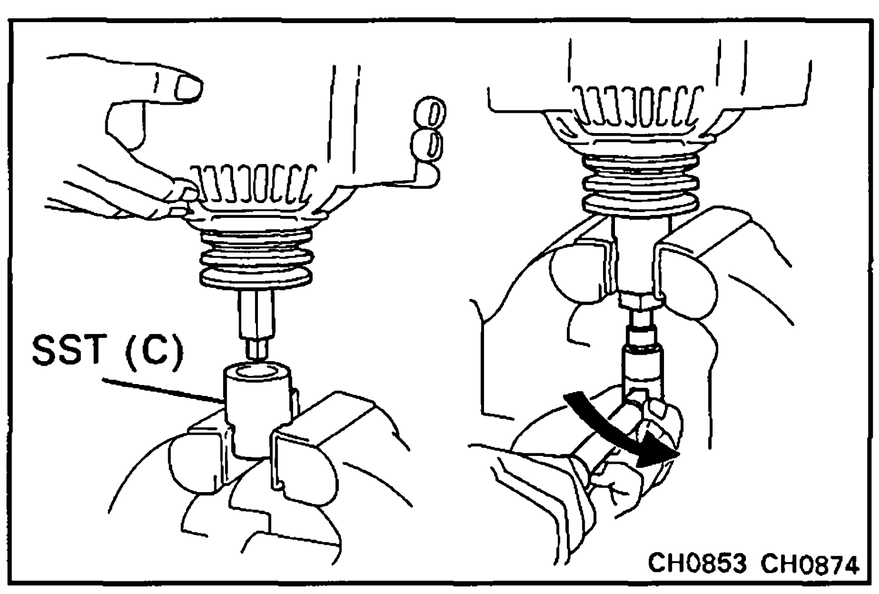

(c) As shown in the illustration, mount SST (C) in a vise, and install the alternator to SST (C).

(d) To loosen the pulley nut, turn SST (A) in the direction shown in the illustration.

NOTICE: To prevent damage to the rotor shaft, do not loosen the pulley nut more that one-half of a turn.

(e) Remove the alternator from SST (C).

(f) Turn SST (B) and remove SST (A and B).

(g) Remove the pulley nut and pulley.

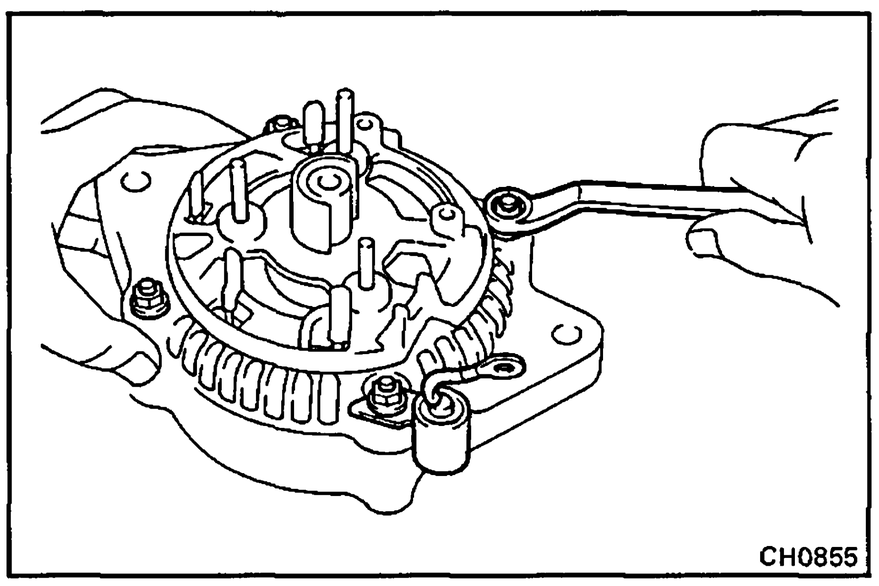

5. REMOVE RECTIFIER END FRAME

(a) (PZJ, HZJ and HDJ)
Remove the four nuts and condenser.

(b) (HZB and HDB)
Remove the four nuts.

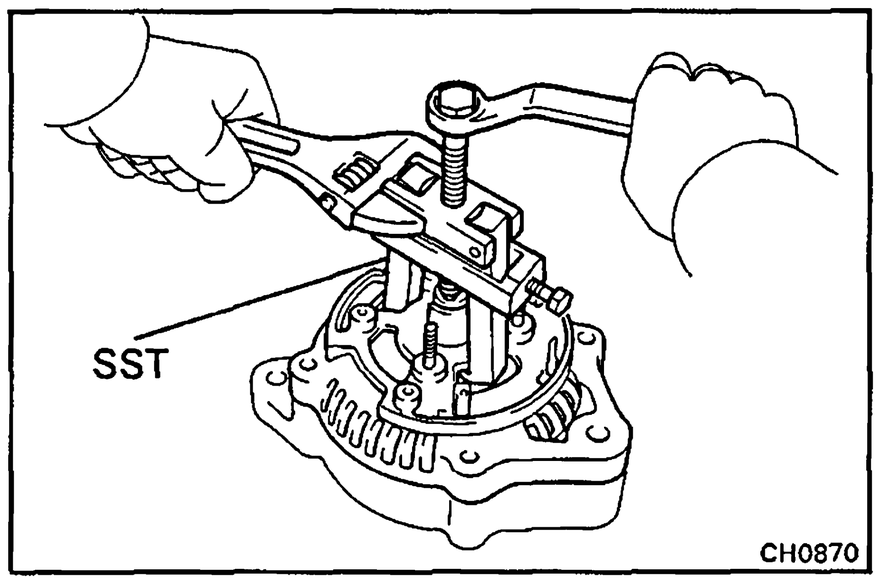

(c) Using SST, remove the rectifier end frame.
SST 09286-46011

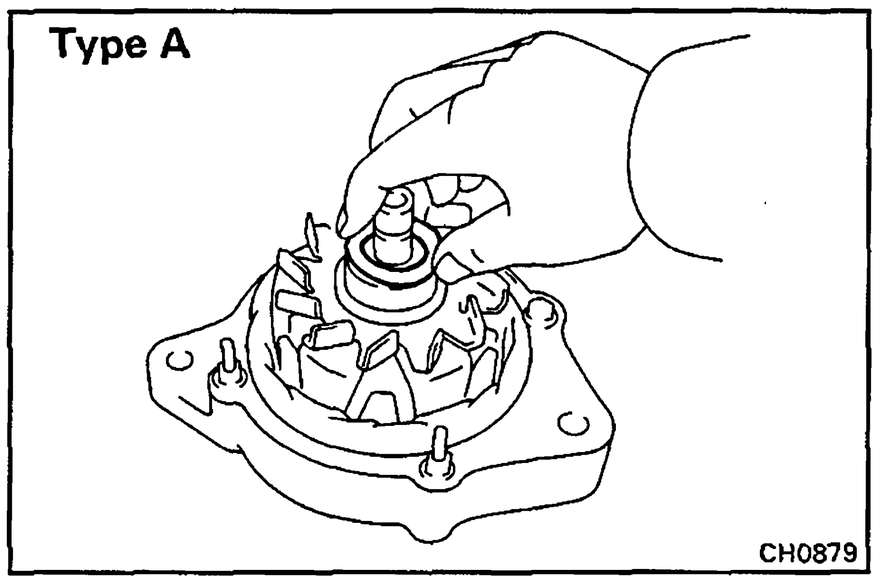

(d) (Type A)
Remove the alternator washer.

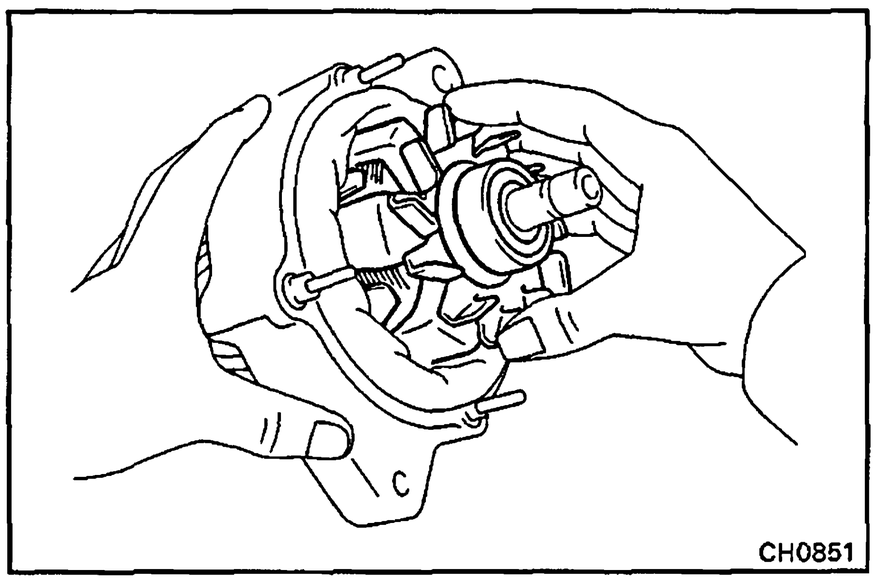

6. REMOVE ROTOR FROM DRIVE END FRAME

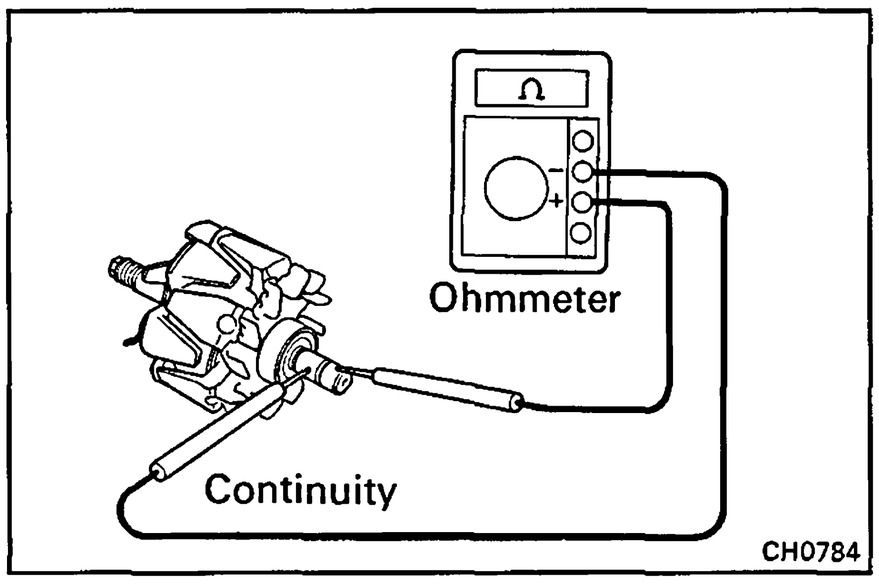

INSPECTION AND REPAIR OF ALTERNATOR

Rotor

1. INSPECT ROTOR FOR OPEN CIRCUIT

Using an ohmmeter, check that there is continuity between the slip rings.

Standard resistance (cold): 12 V Type 2.7 – 3.1 Ω
24 V Type 1.0 – 1.4 Ω

If there is no continuity, replace the rotor.

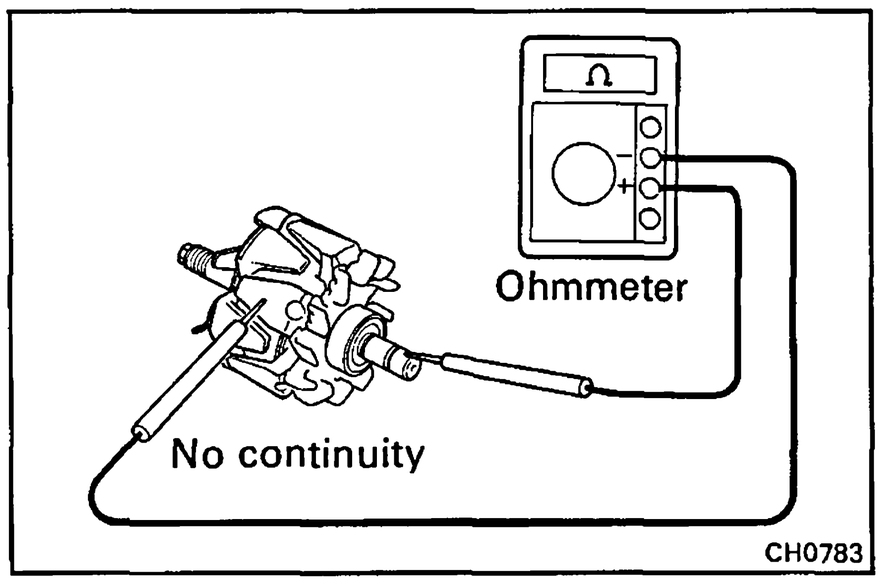

2. INSPECT ROTOR FOR GROUND

Using an ohmmeter, check that there is no continuity between the slip ring and the rotor.

If there is continuity, replace the rotor.

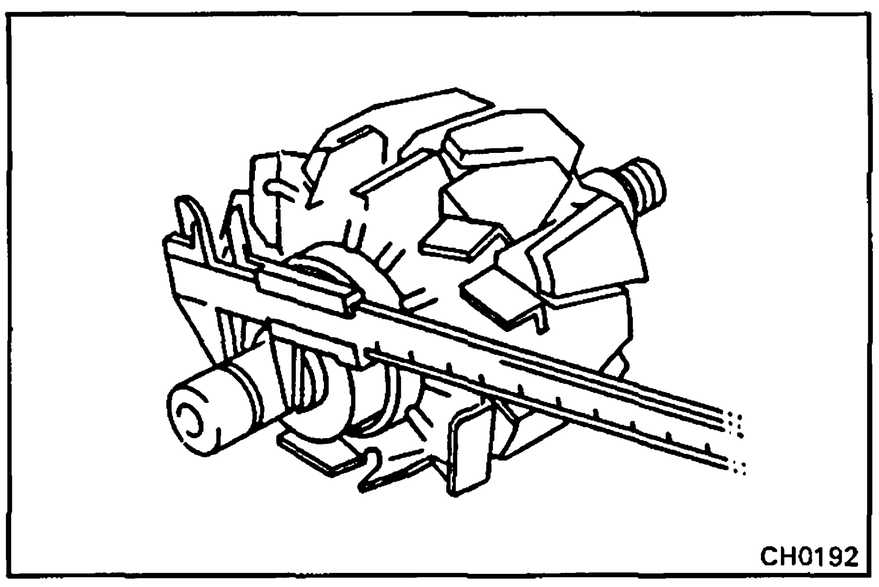

3. INSPECT SLIP RINGS

(a) Check that the slip rings are not rough or scored.

If rough or scored, replace the rotor.

(b) Using vernier calipers, measure the slip ring diameters.

Standard diameter: 14.2 – 14.4 mm (0.559 – 0.567 in.)

Minimum diameter: 12.8 mm (0.504 in.)

If the diameter is less than minimum, replace the rotor.

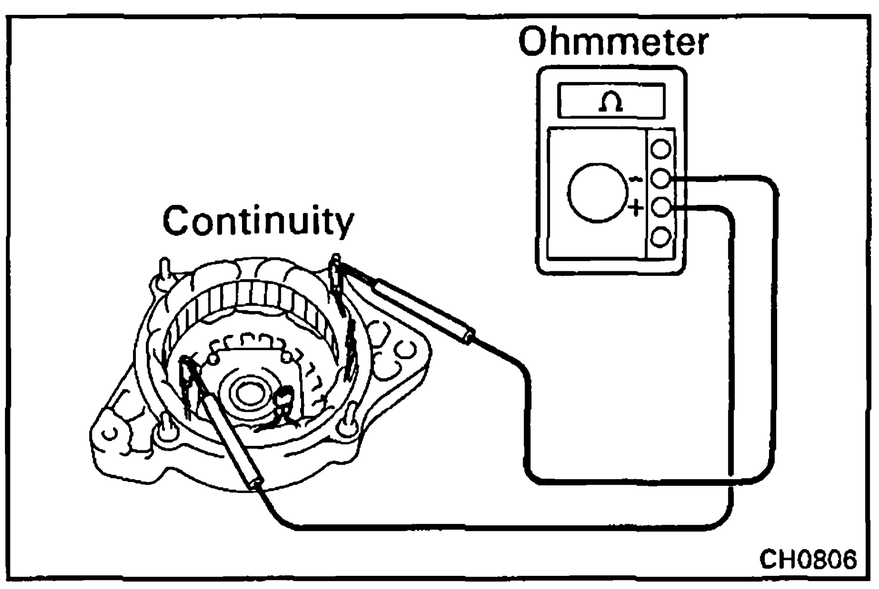

Stator (Drive End Frame)

1. INSPECT STATOR FOR OPEN CIRCUIT

Using an ohmmeter, check that there is continuity between the coil leads.

If there is no continuity, replace the drive end frame assembly.

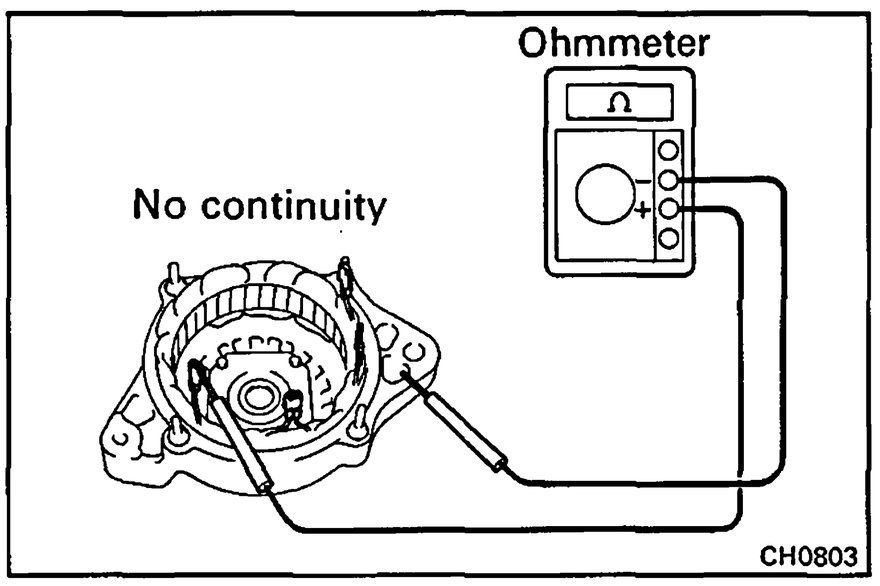

2. INSPECT STATOR FOR GROUND

Using an ohmmeter, check that there is no continuity between the coil leads and drive end frame.

If there is continuity, replace the drive end frame assembly.

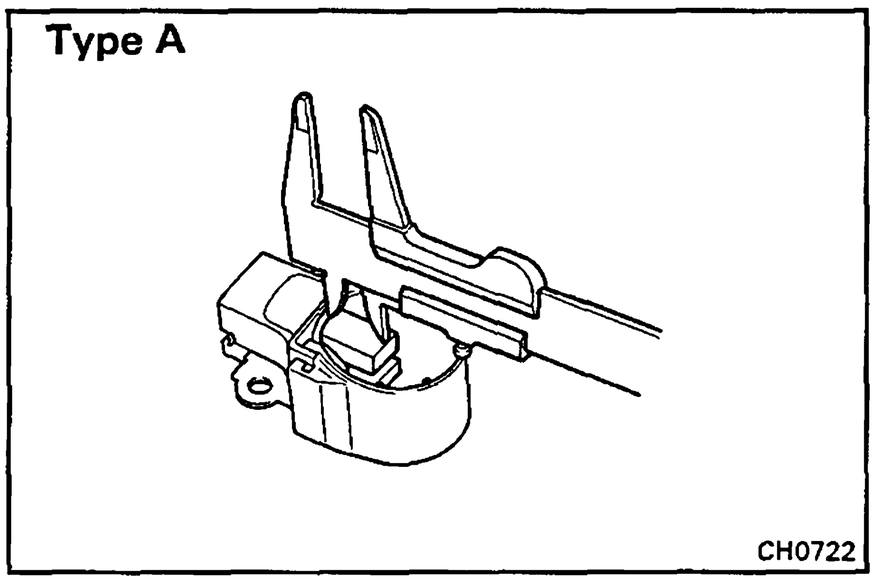

Brushes

1. **INSPECT EXPOSED BRUSH LENGTH**

   Using vernier calipers or scale, measure the exposed brush length.

   Standard exposed length: 10.5 mm (0.413 in.)

   Minimum exposed length: 1.5 mm (0.059 in.)

   If the exposed length is less than minimum, replace the brushes and brush holder assembly (Type A) or brushes (Type B).

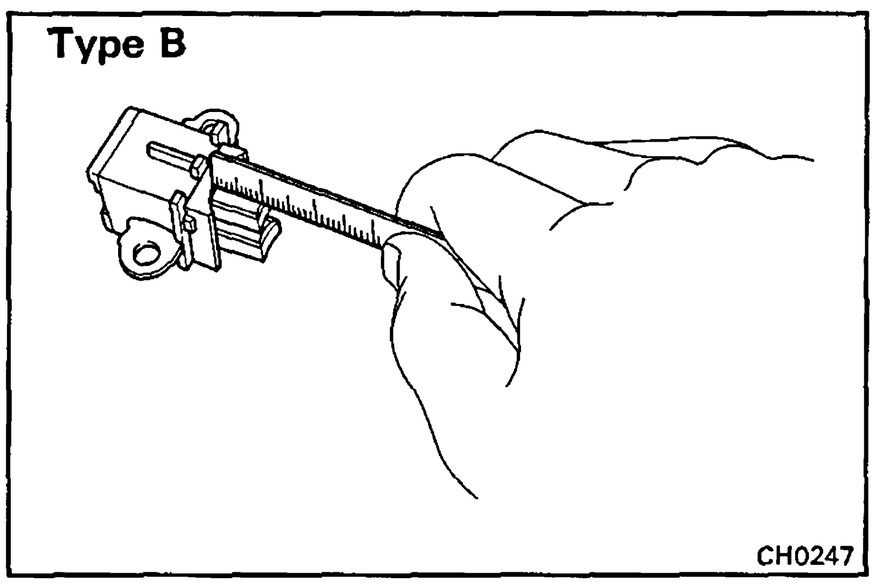

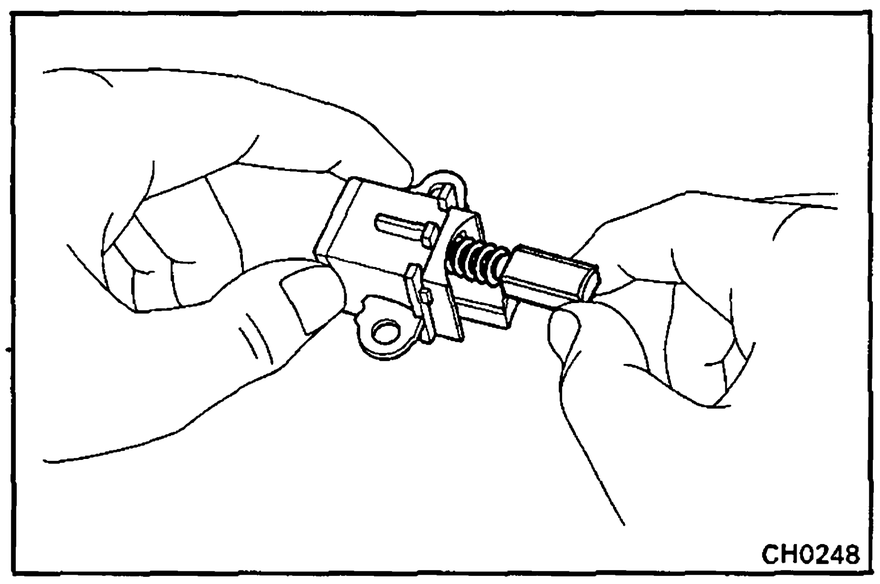

2. **(Type B)**
   IF NECESSARY, REPLACE BRUSHES

   (a) Unsolder and remove the brush and spring.

   (b) Run the wire of the brush through the hole in the brush holder, and insert the spring and brush into the brush holder.

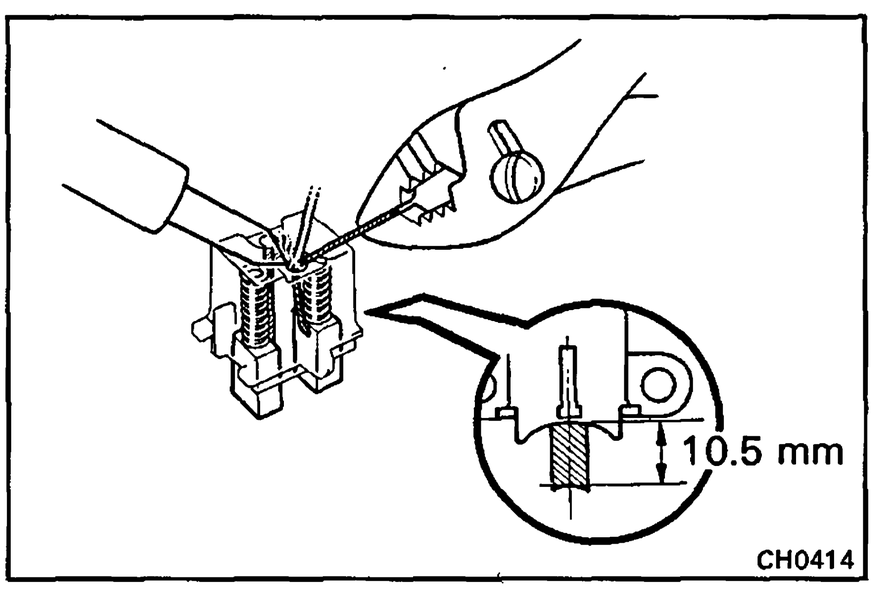

   (c) Solder the brush wire to the brush holder at the exposed length.

   Exposed length: 10.5 mm (0.413 in.)

   (d) Check that the brush moves smoothly in the brush holder.

   (e) Cut off the excess wire.

   (f) Apply insulation paint to the soldered point.

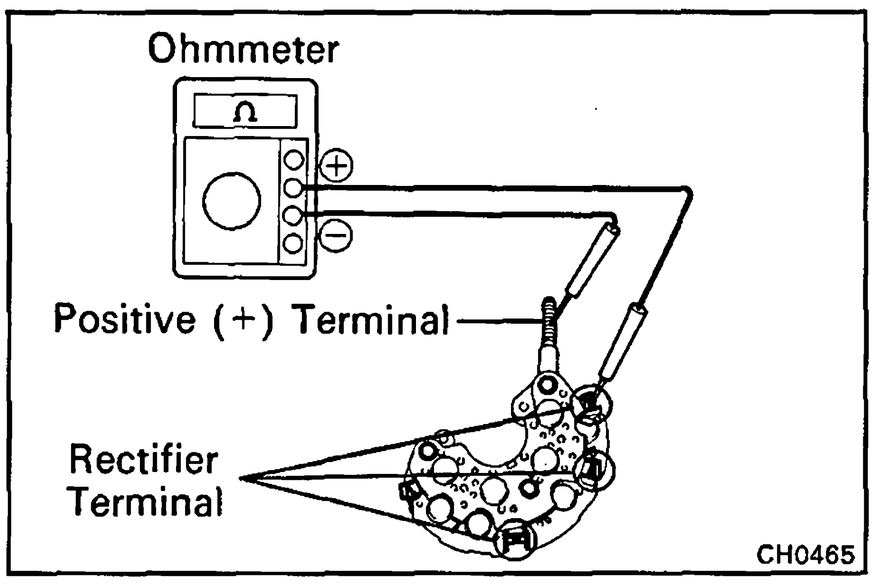

Rectifiers (Rectifier Holder)

1. **INSPECT POSITIVE SIDE RECTIFIER**

   (a) Using an ohmmeter, connect one tester probe to the positive (+) terminal and the other to each rectifier terminal.

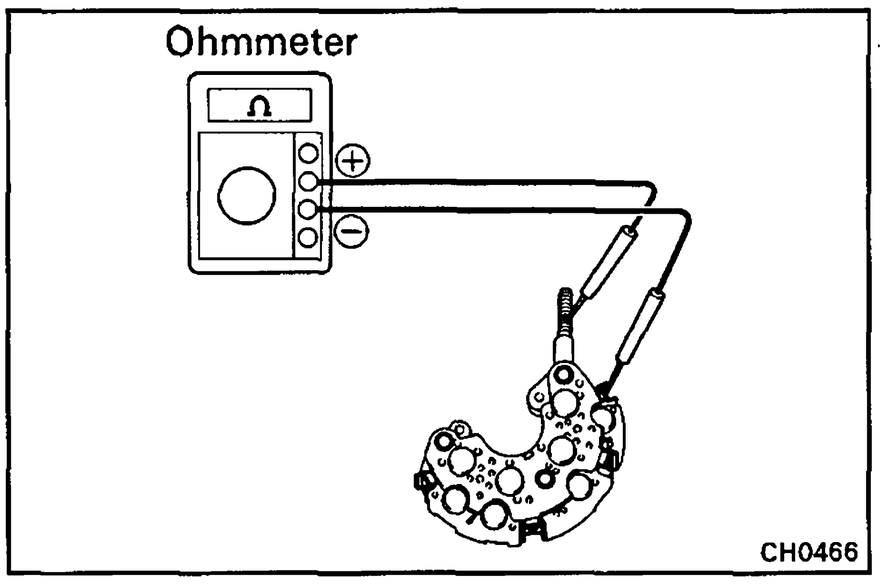

(b) Reverse the polarity of the tester probes and repeat step (a).

(c) Check that one shows continuity and the other shows no continuity.

If continuity is not as specified, replace the rectifier holder.

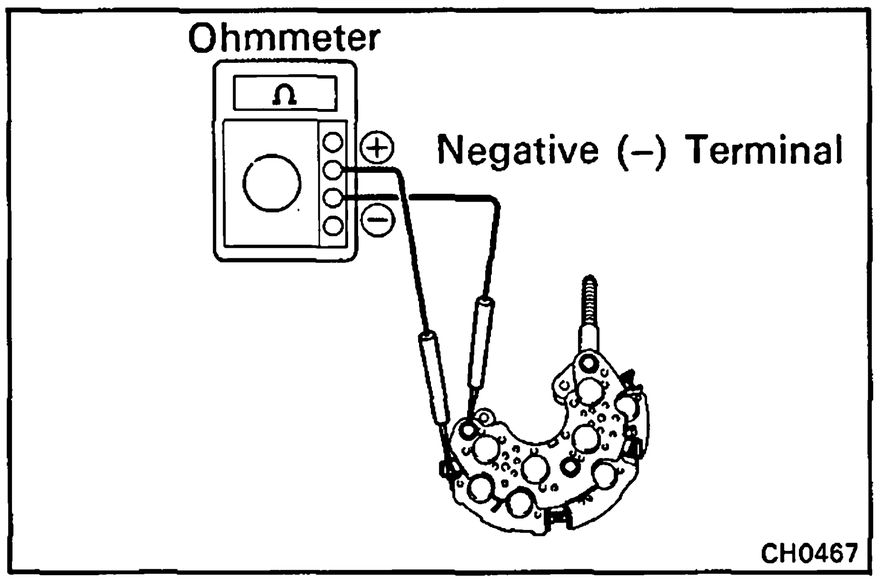

2. INSPECT NEGATIVE SIDE RECTIFIER

(a) Connect one tester probe to each rectifier terminal and the other to each rectifier negative (–) terminal.

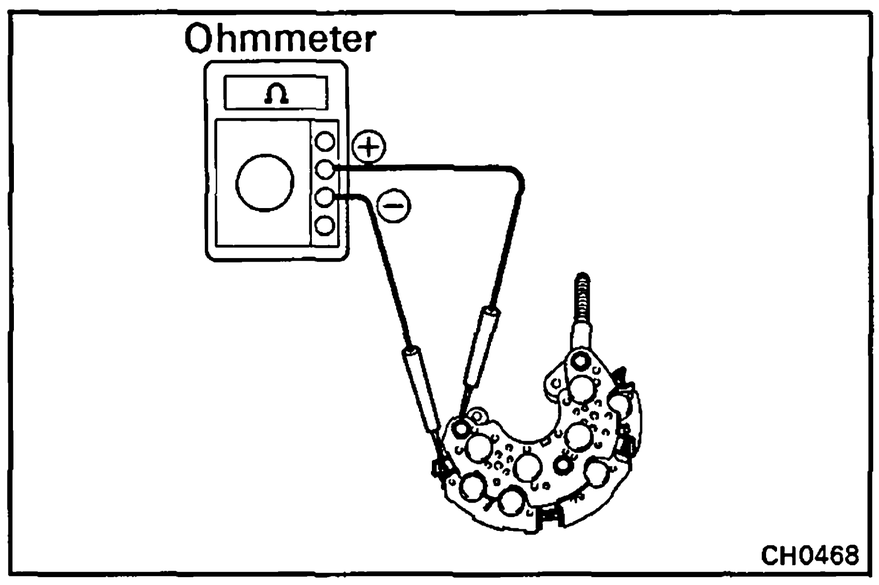

(b) Reverse the polarity of the tester probes.

(c) Check that one shows continuity and the other shows no continuity.

If continuity is not as specified, replace the rectifier holder.

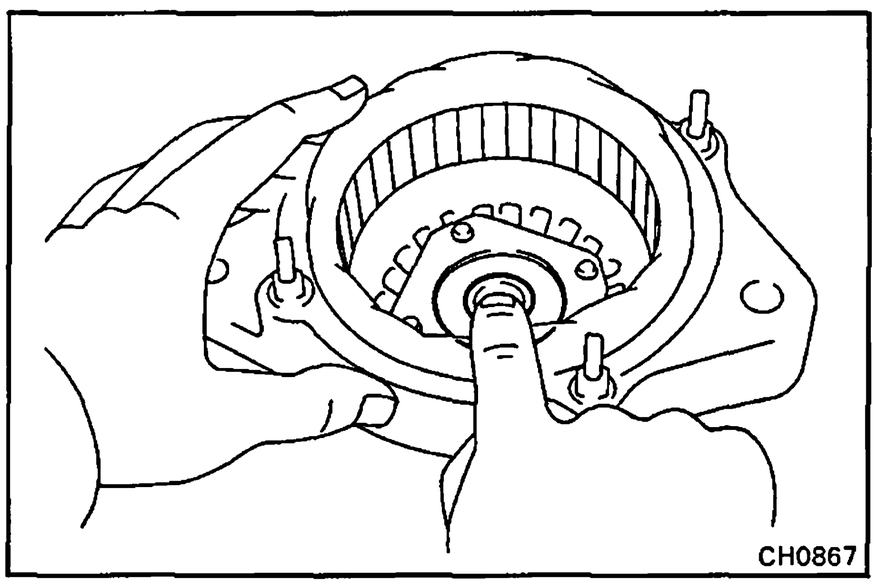

Bearings

1. INSPECT FRONT BEARING

Check that the bearing is not rough or worn.

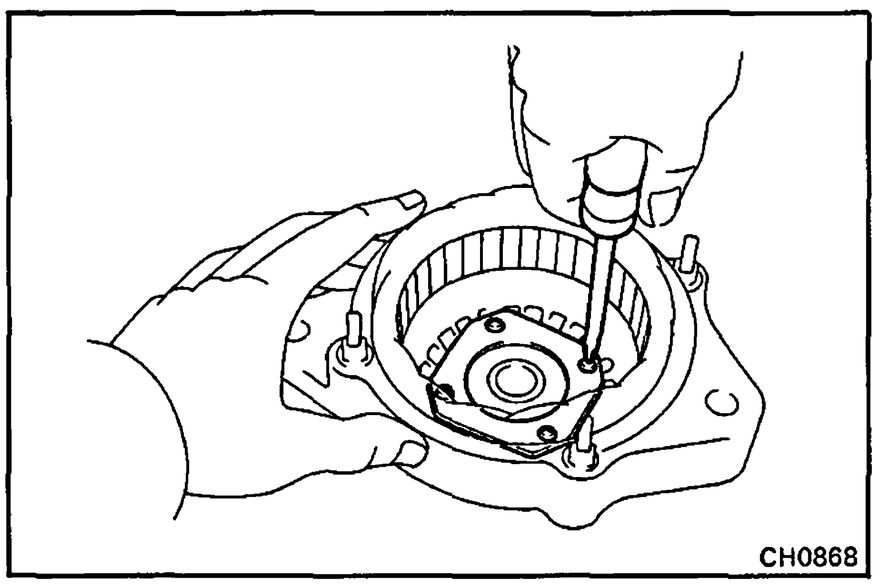

2. IF NECESSARY, REPLACE FRONT BEARING

(a) Remove the four screws, and bearing retainer.

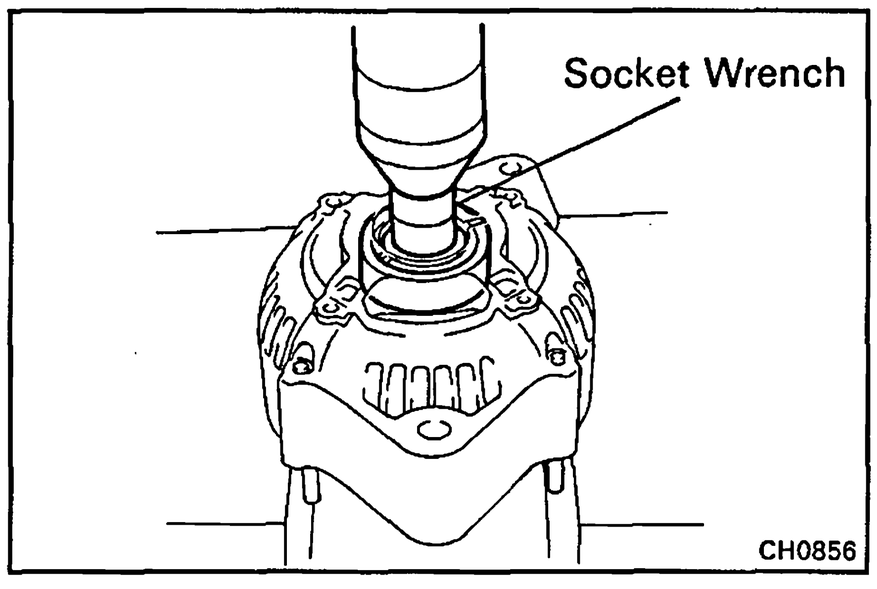

(b) Using a press and socket wrench, press out the front bearing.

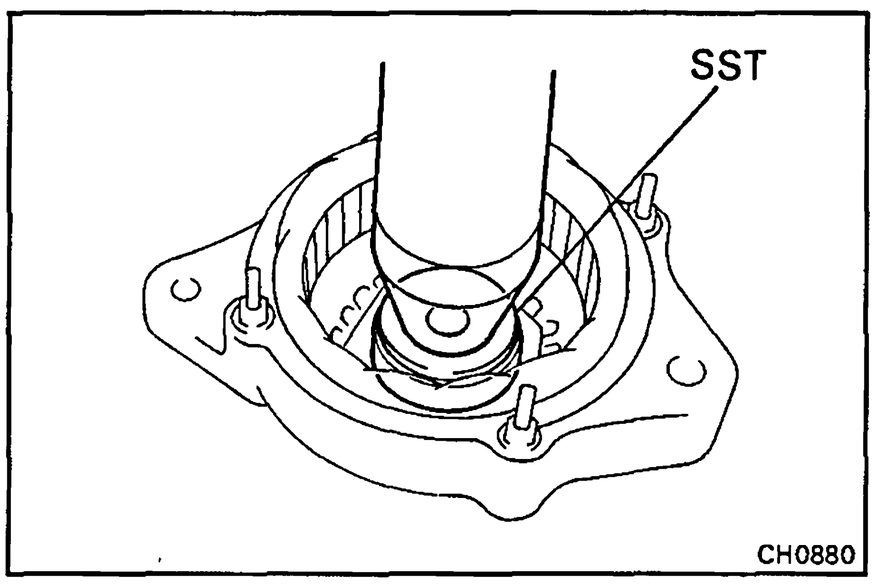

(c) Using SST and a press, press in a new bearing.
SST 09608-20012 (09608-00030)

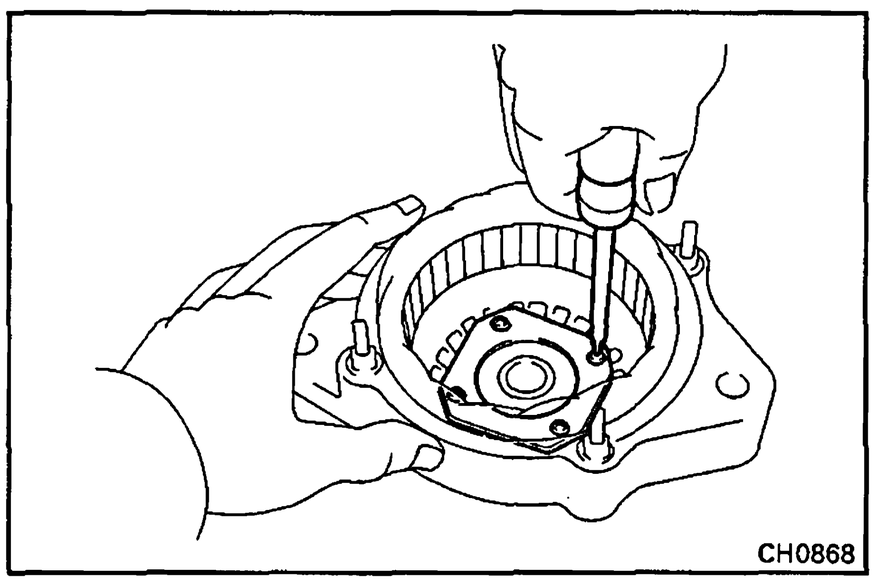

(d) Install the bearing retainer with the four screws.

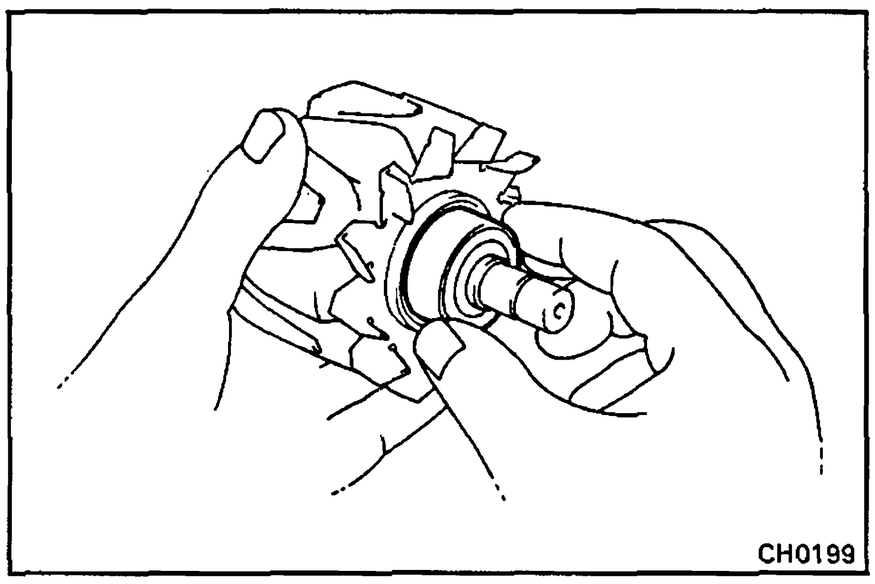

3. INSPECT REAR BEARING

Check that the bearing is not rough or worn.

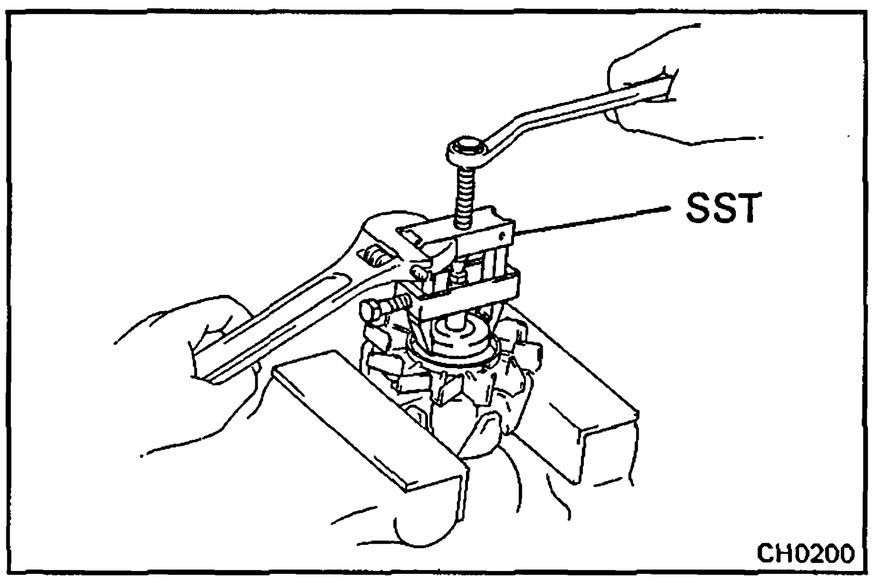

4. IF NECESSARY, REPLACE REAR BEARING

(a) Using SST, remove the bearing cover and bearing.
SST 09820-00021

NOTICE: Be careful not to damage the fan.

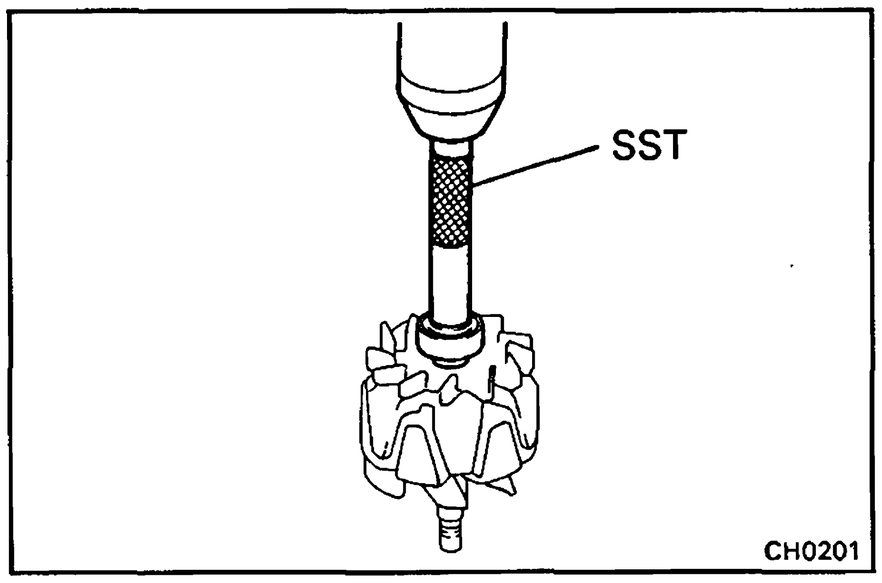

(b) Using SST and a press, press in a new bearing and bearing cover.

SST 09285-76010

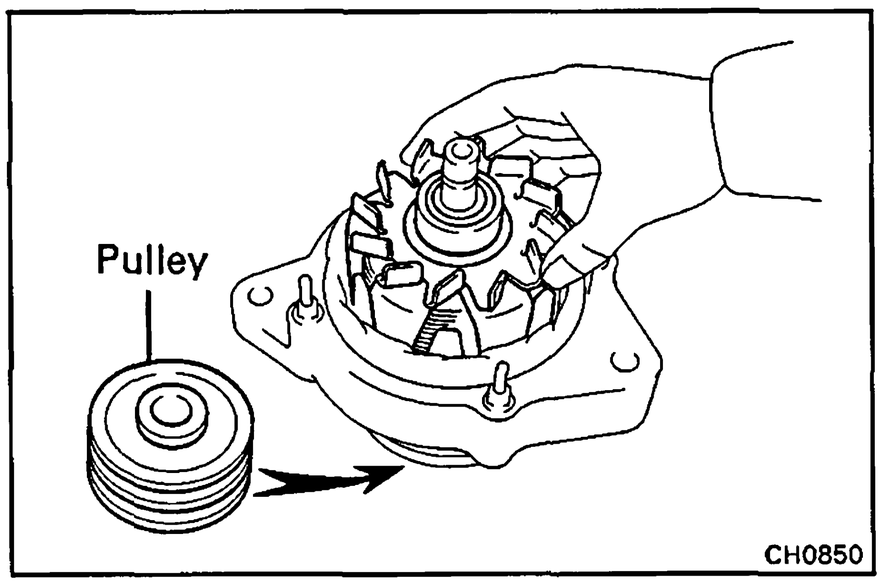

ASSEMBLY OF ALTERNATOR

(See page CH-8)

1. INSTALL ROTOR TO DRIVE END FRAME

(a) Place the rectifier end frame on the pulley.

(b) Install the rotor to the rectifier end frame.

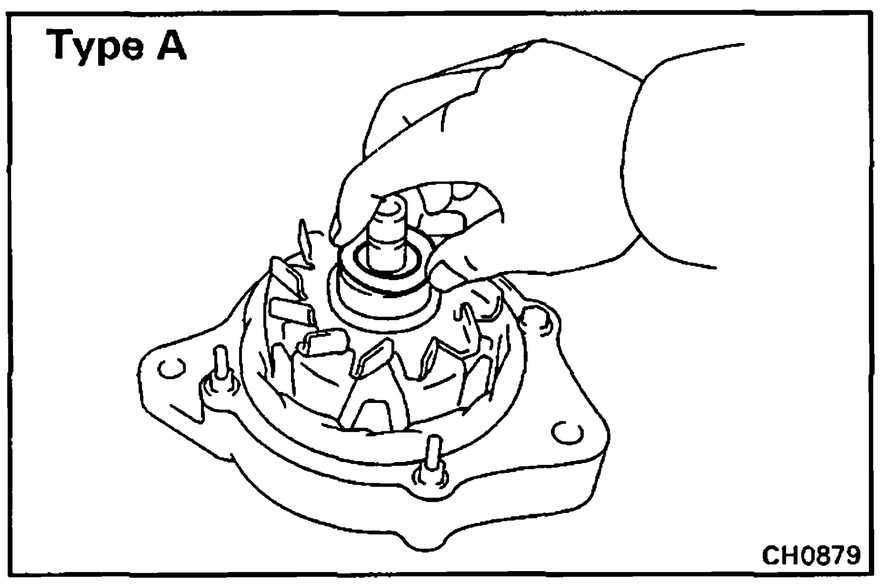

2. INSTALL RECTIFIER END FRAME

(a) (Type A)
Place the alternator washer on the rotor.

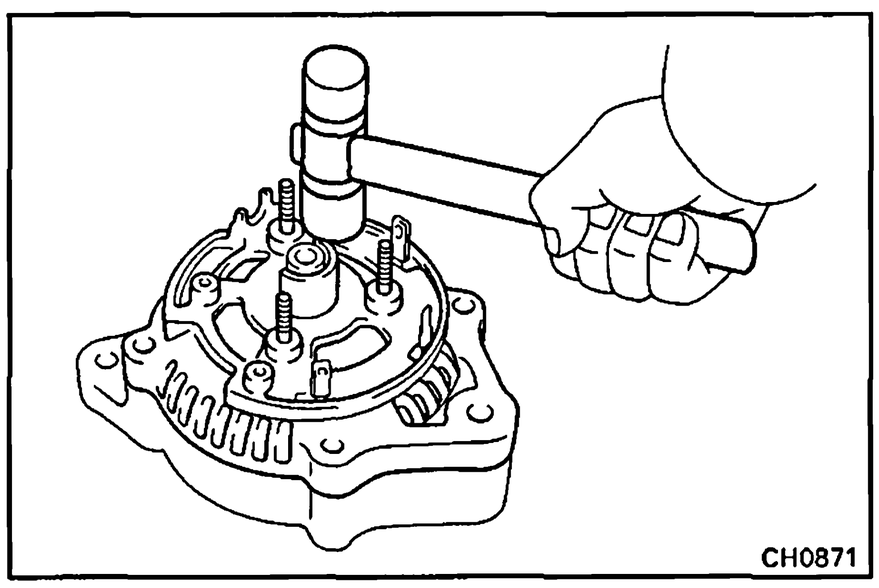

(b) Using a plastic-faced hammer, lightly tap in the end frame.

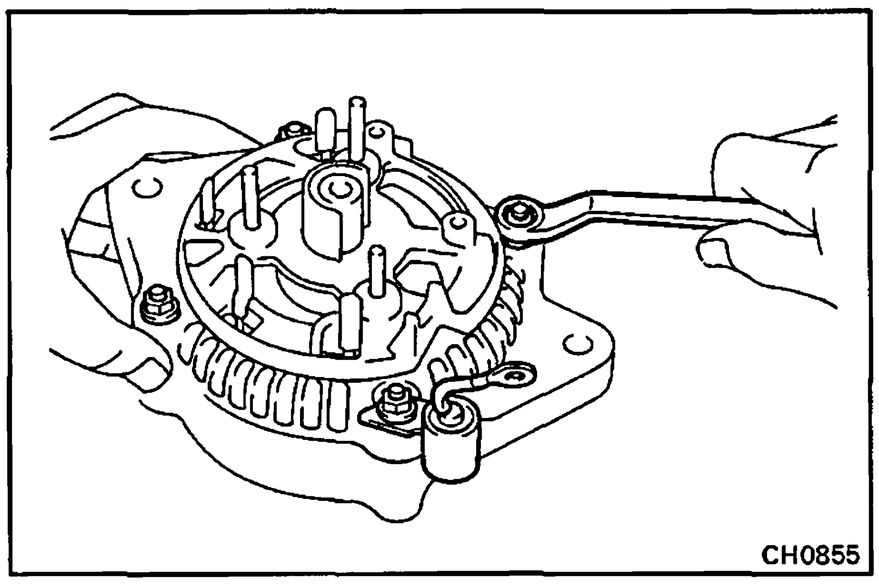

(c) (PZJ, HZJ and HDJ)
Install the codenser and four nuts.

(d) (HZB and HDB)
Install the four nuts.

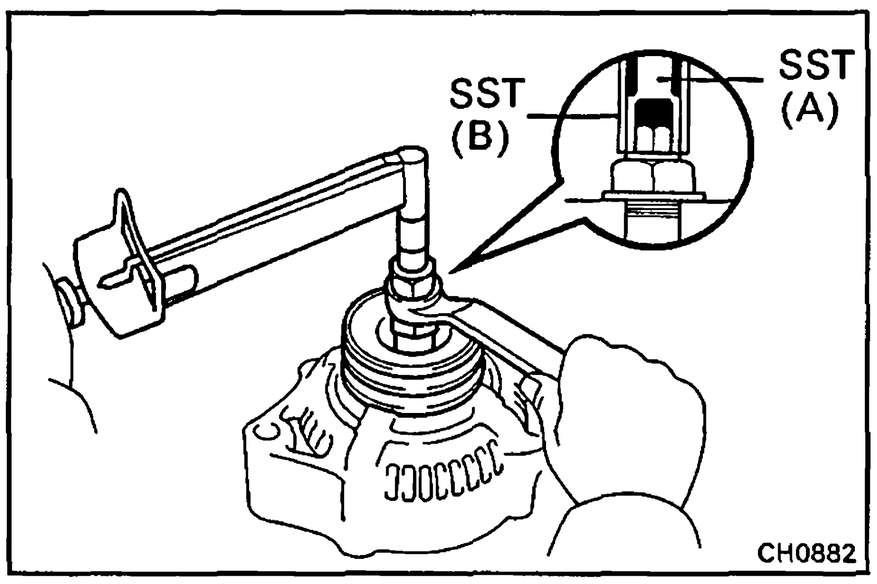

3. **INSTALL PULLEY**

(a) Install the pulley to the rotor shaft by tightening the pulley nut by hand.

(b) Hold SST (A) with a torque wrench, and tighten SST (B) clockwise to the specified torque.

SST 09820-63010

Torque: 400 kg-cm (29 ft-lb, 39 N·m)

(c) Check that SST (A) is secured to the pulley shaft.

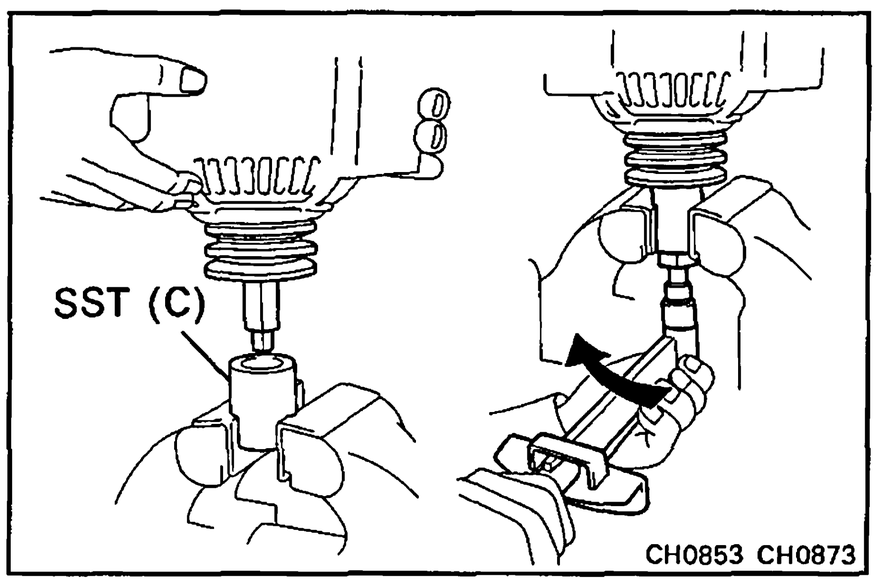

(d) As shown in the illustration, mount SST (C) in a vise, and install the alternator to SST (C).

(e) To torque the pulley nut, turn SST (A) in the direction shown in the illustration.

Torque: 1,125 kg-cm (81 ft-lb, 110 N·m)

(f) Remove the alternator from SST (C).

(g) Turn SST (B) and remove SST (A and B).

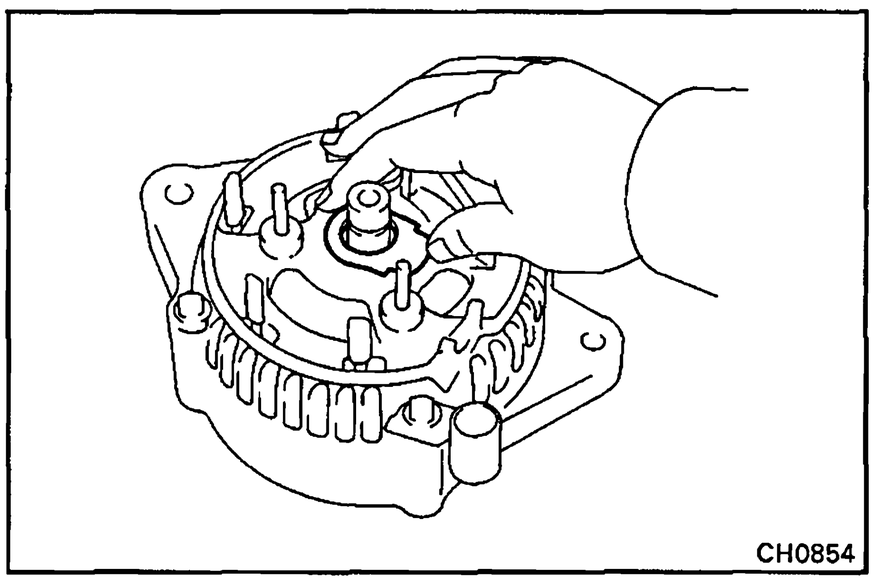

4. **INSTALL RECTIFIER HOLDER**

(a) (Type A)
Place the seal plate on the rectifier end frame.

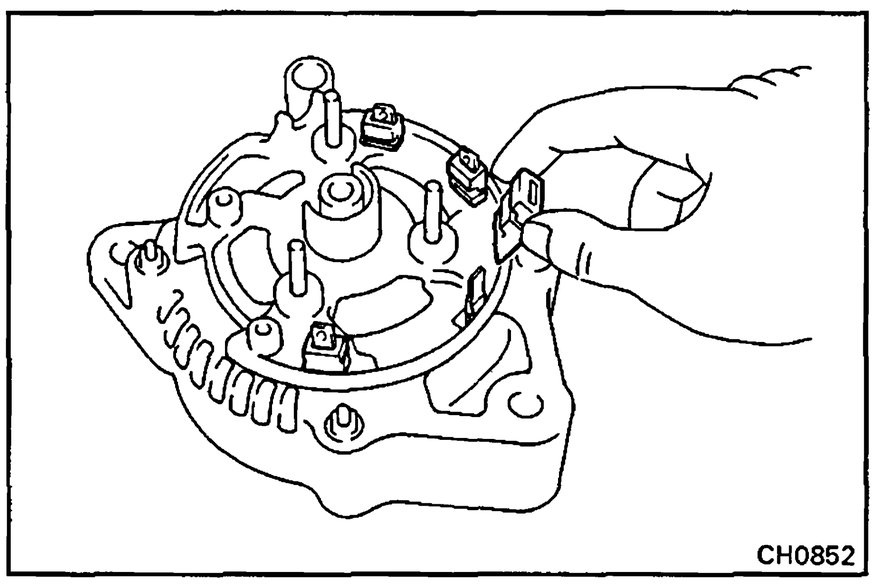

(b) Install the four rubber insulators on the lead wires.

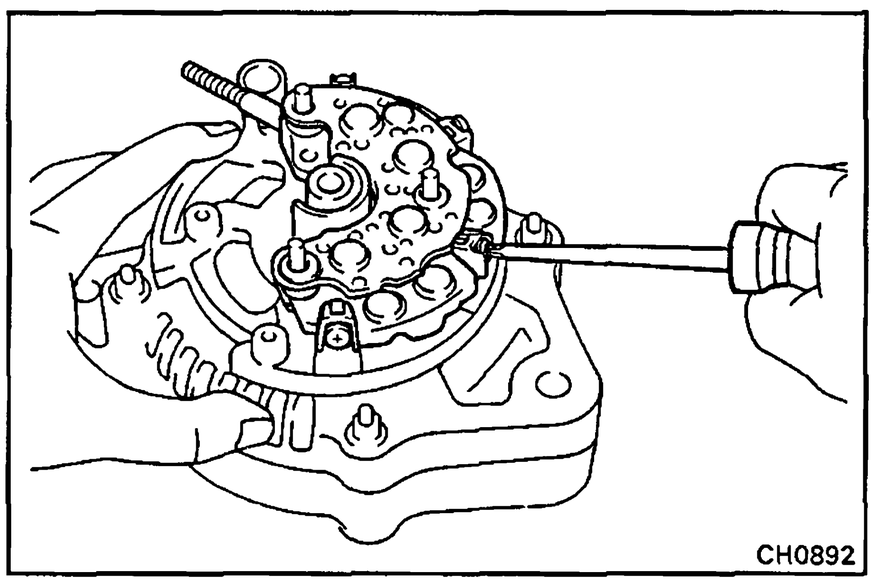

(c) Install the rectifier holder with the four screws.

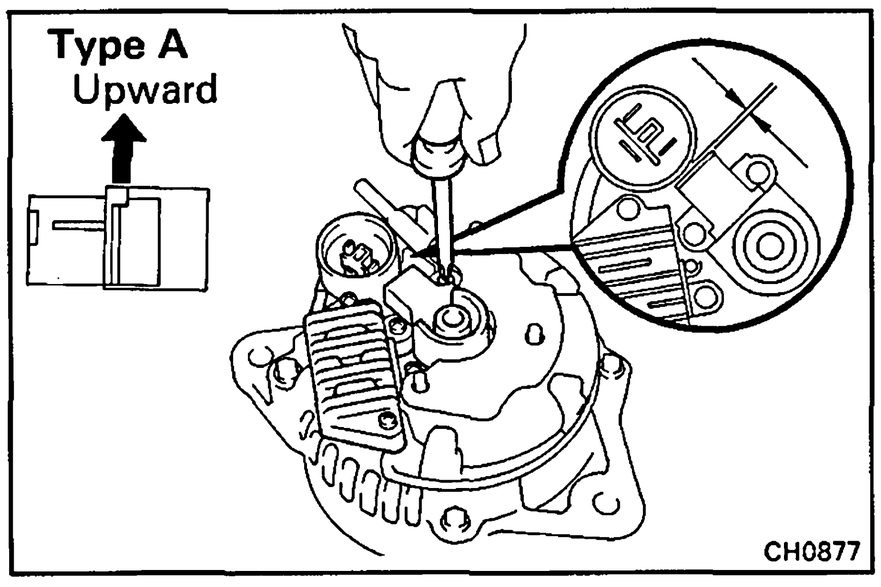

5. **INSTALL IC REGULATOR AND BRUSH HOLDER (Type A)**

(a) Place on the IC regulator and brush holder on the rectifier end frame.

NOTICE: Be careful about the holder installation direction.

(b) Install the five screws until there is a clearance of approx. 1.1 mm (0.043 in.) between the brush holder and connector.

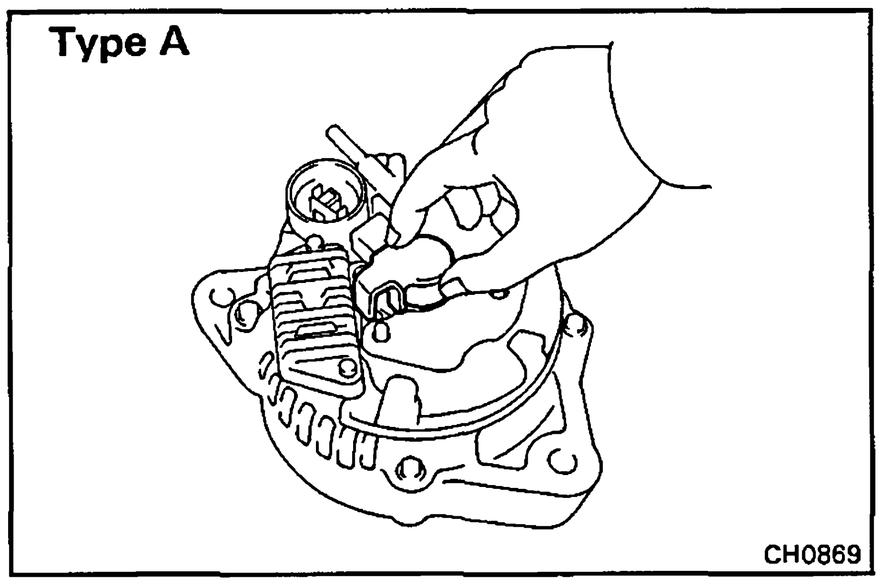

(c) Place the brush holder cover on the brush holder.

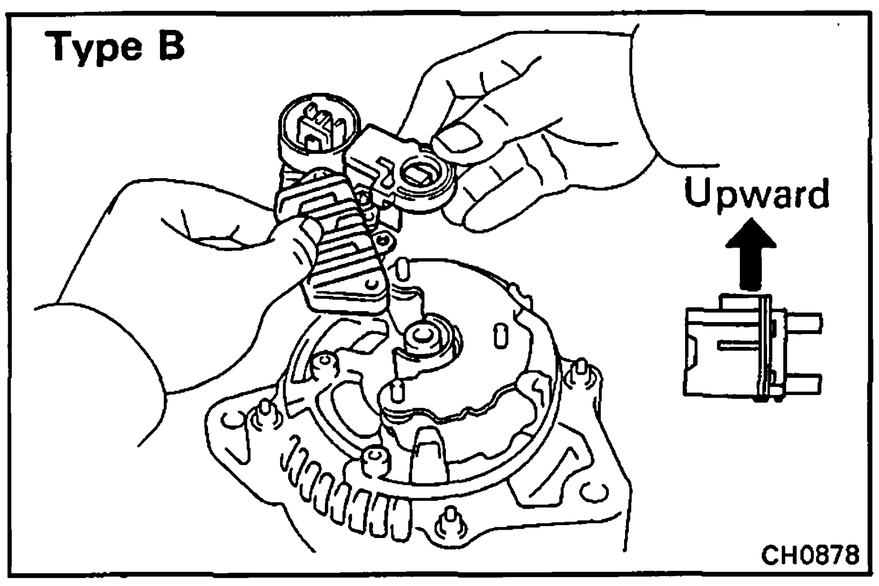

(Type B)

(a) Install the brush holder cover to the brush holder.

NOTICE: Be careful about the holder installation direction.

(b) Place the IC regulator together with the brush holder horizontally on the rectifier end frame.

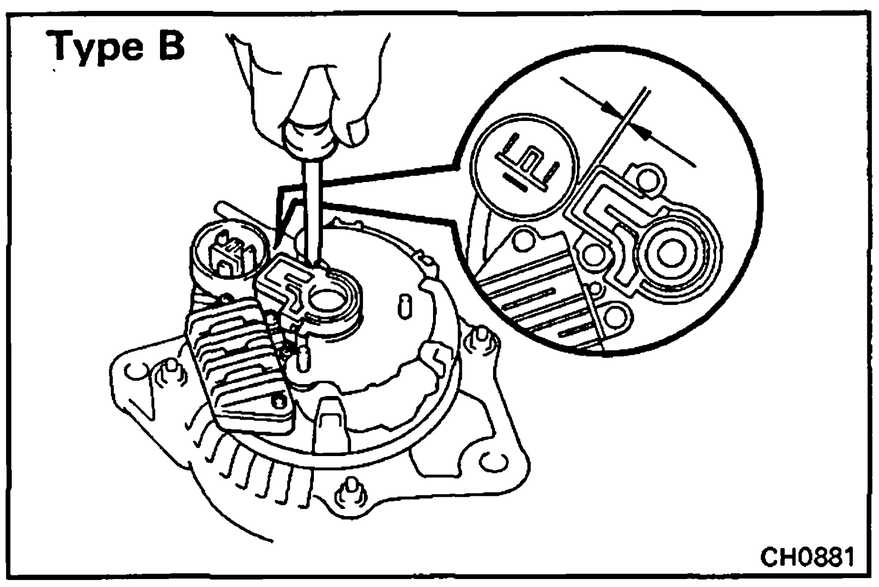

(c) Install the five screws until there is a clearance of approx. 1.1 mm (0.043 in.) between the brush holder and connector.

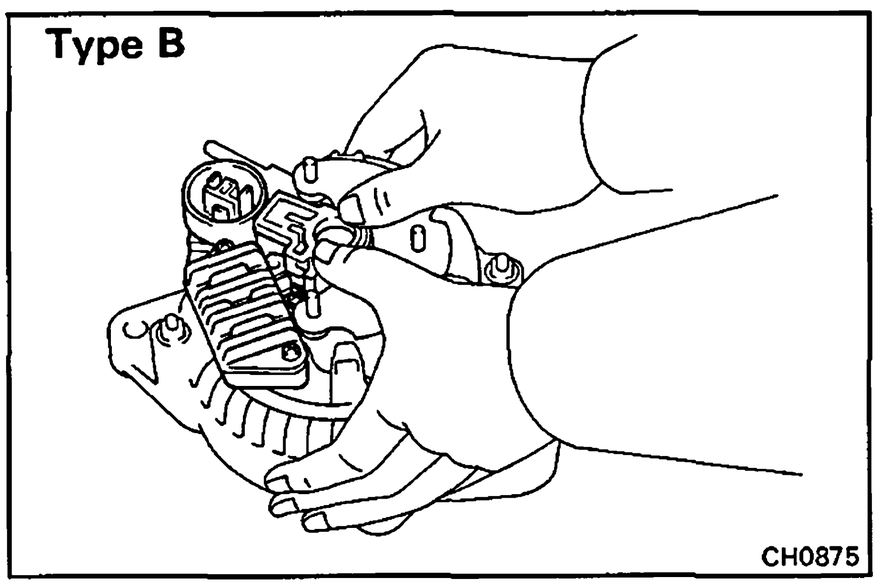

(d) Fit the brush holder cover.

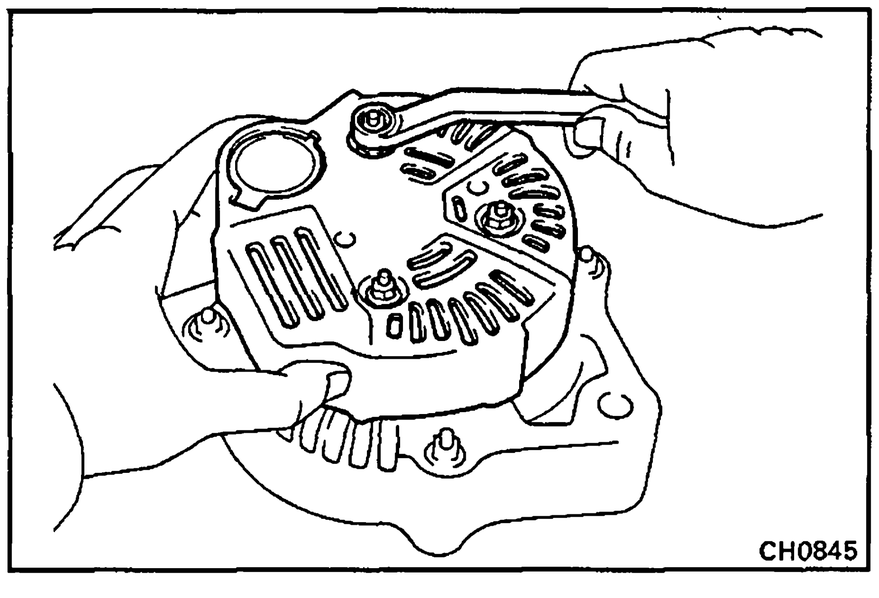

6. INSTALL REAR END COVER

(a) Install the rear end cover with the three nuts.

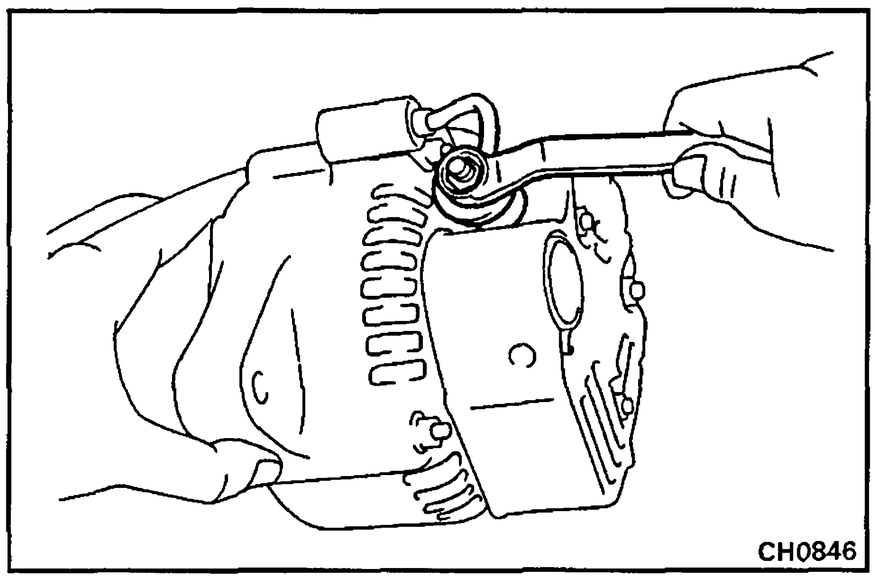

(b) (PZJ, HZJ and HDJ)
Install the terminal insulator, condenser lead wire with nut.

(c) (HZB and HDB)
Install the terminal insulator with the nut.

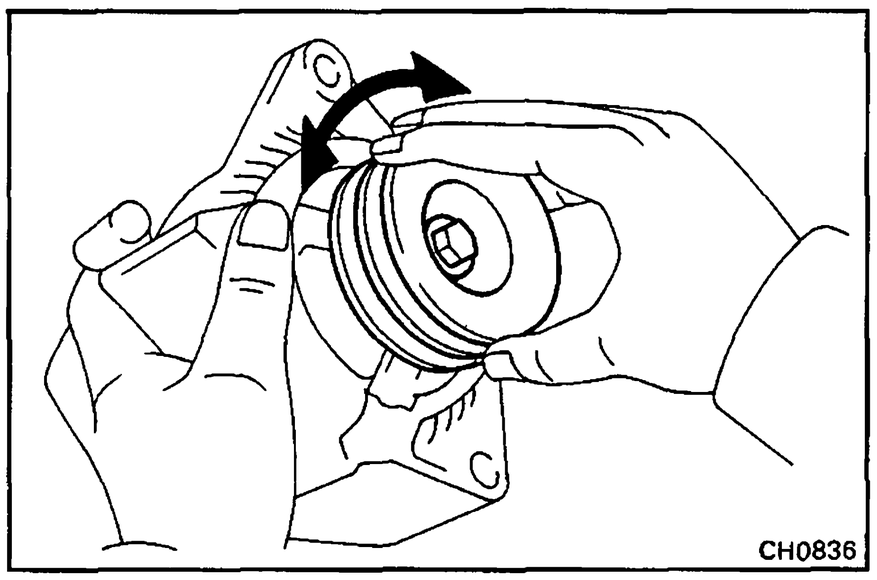

7. CHECK THAT ROTOR ROTATES SMOOTHLY

SERVICE SPECIFICATIONS

	Page
ENGINE MECHANICAL	A-2
TURBOCHARGER SYSTEM	A-8
FUEL SYSTEM	A-9
COOLING SYSTEM	A-21
LUBRICATION SYSTEM	A-21
STARTING SYSTEM	A-22
CHARGING SYSTEM	A-22

ENGINE MECHANICAL

Specifications

Engine tune-up	Coolant capacity			
	w/o Heater			
	PZJ70, 73, 75	9.6 liters	10.1 US qts	8.4 Imp. qts
	HZJ70, 73, 75			
	M/T	9.9 liters	10.5 US qts	8.7 Imp. qts
	A/T	9.7 liters	10.3 US qts	8.5 Imp. qts
	HZJ80 and HDJ80			
	M/T	10.4 liters	11.0 US qts	9.2 Imp. qts
	A/T	10.2 liters	10.8 US qts	9.0 Imp. qts
	HZB30 and HDB30	10.2 liters	10.8 US qts	9.0 Imp. qts
	w/ Heater			
	PZJ70, 73, 75	10.3 liters	10.9 US qts	9.1 Imp. qts
	HZJ70, 73, 75			
	M/T	10.6 liters	11.2 US qts	9.3 Imp. qts
	A/T	10.4 liters	11.0 US qts	9.2 Imp. qts
	HZJ80 and HDJ80			
	M/T	11.1 liters	11.6 US qts	9.8 Imp. qts
	A/T	10.9 liters	11.5 US qts	9.6 Imp. qts
	HZB30 and HDB30	14.6 liters	15.4 US qts	12.8 Imp. qts
	w/ Front and rear heaters			
	PZJ70, 73, 75	11.3 liters	11.9 US qts	9.9 Imp. qts
	HZJ70, 73, 75	11.6 liters	12.2 US qts	10.2 Imp. qts
	HZJ80 and HDJ80			
	M/T (Europe)	12.0 liters	12.7 US qts	10.6 Imp. qts
	A/T (Europe)	11.8 liters	12.5 US qts	10.4 Imp. qts
	M/T (Othres)	11.9 liters	12.6 US qts	10.5 Imp. qts
	A/T (Others)	11.7 liters	12.4 US qts	10.3 Imp. qts
	Engine oil capacity (PZJ70, 73, 75)			
	Drain and refill w/ Oil filter change	9.0 liters	9.5 US qts	7.9 Imp. qts
	w/o Oil filter change	7.7 liters	8.1 US qts	6.8 Imp. qts
	Dry fill	9.3 liters	9.8 US qts	8.2 Imp. qts
	Engine oil capacity (HZJ70, 73, 75)			
	Drain and refill w/ Oil filter change	9.5 liters	10.0 US qts	8.4 Imp. qts
	w/o Oil filter change	8.2 liters	8.7 US qts	7.2 Imp. qts
	Dry fill	9.8 liters	10.4 US qts	8.6 Imp. qts
	Engine oil capacity (HZJ80 and HDJ80)			
	Drain and refill w/ Oil filter change	9.3 liters	9.8 US qts	8.1 Imp. qts
	w/o Oil filter change	8.0 liters	8.5 US qts	7.0 Imp. qts
	Dry fill	9.6 liters	10.1 US qts	8.4 Imp. qts
	Engine oil capacity (HZB30 and HDB30)			
	Drain and refill w/ Oil filter change	9.8 liters	10.4 US qts	8.6 Imp. qts
	w/o Oil filter change	8.5 liters	9.0 US qts	7.5 Imp. qts
	Dry fill	10.1 liters	10.7 US qts	8.9 Imp. qts
	Engine oil API grade			
	Europe	CD or better		
	Others	CC, CD or better		
	Alternator drive belt			
	Deflection New belt	6 – 7 mm		0.24 – 0.28 in.
	Used belt	8 – 11 mm		0.31 – 0.43 in.
	Tension (Reference) New belt	45 – 55 kg		
	Used belt	20 – 35 kg		
	Battery specific gravity			
	When fully charged at 20°C (68°F)			
	95D31R and 95D31L	1.27 – 1.29		
	ex. (95D31R and 95D31L)	1.25 – 1.27		

Specification (Cont'd)

Engine tune-up (cont'd)	Valve clearance	Intake	0.15 – 0.25 mm	0.006 – 0.010 in.
		Exhaust	0.35 – 0.45 mm	0.014 – 0.018 in.
	New valve adjusting shim thickness		2.35 mm	0.0925 in.
			2.40 mm	0.0945 in.
			2.45 mm	0.0965 in.
			2.50 mm	0.0984 in.
			2.55 mm	0.1004 in.
			2.60 mm	0.1024 in.
			2.65 mm	0.1043 in.
			2.70 mm	0.1063 in.
			2.75 mm	0.1083 in.
			2.80 mm	0.1102 in.
			2.85 mm	0.1122 in.
			2.90 mm	0.1142 in.
			2.95 mm	0.1161 in.
			3.00 mm	0.1181 in.
			3.05 mm	0.1201 in.
			3.10 mm	0.1220 in.
			3.15 mm	0.1240 in.
			3.20 mm	0.1260 in.
			3.25 mm	0.1280 in.
			3.30 mm	0.1299 in.
	Injection timing			
	Plunger stroke	1PZ	0.82 – 0.88 mm	0.0323 – 0.0346 in.
		1HZ	1.03 – 1.09 mm	0.0406 – 0.0429 in.
		1HD-T	1.29 – 1.35 mm	0.0508 – 0.0531 in.
	Idle speed	1PZ	650 rpm	
		1HZ (M/T)	650 rpm	
		1HZ (A/T)	710 rpm	
		1HD-T (M/T)	650 rpm	
		1HD-T (A/T)	800 rpm	
	Maximum speed	1PZ and 1HZ	4,600 rpm	
		1HD-T	4,400 rpm	
	A/C idle-up setting speed		950 rpm	
	Injection order	1PZ	1 – 2 – 4 – 5 – 3	
		1HZ and 1HD-T	1 – 4 – 2 – 6 – 3 – 5	
Compression pressure	Engine revolution at 250 rpm			
	1PZ and 1HZ	STD	37.0 kg/cm^2 (526 psi, 3,628 kPa) or more	
		Limit	27.0 kg/cm^2 (384 psi, 2,648 kPa)	
	1HD-T	STD	35.0 kg/cm^2 (498 psi, 3,432 kPa) or more	
		Limit	25.0 kg/cm^2 (356 psi, 2,452 kPa)	
	Difference of pressure between each cylinder		5.0 kg/cm^2 (71 psi, 490 kPa) or less	
Idler pulley tension spring	Free length		72.7 mm	2.862 in.
	Installed load at 90.1 mm (3.547 in.)		23 – 28 kg (50.7 – 61.7 lb, 225 – 275 N)	
Timing gear	Idler gear inside diameter		45.000 – 45.025 mm	1.7717 – 1.7726 in.
	Idler gear shaft diameter		44.950 – 44.975 mm	1.7679 – 1.7707 in.
	Idler gear oil clearance	STD	0.025 – 0.075 mm	0.0010 – 0.0030 in.
		Limit	0.20 mm	0.0079 in.
	Gear backlash	STD	0.05 – 0.15 mm	0.0020 – 0.0059 in.
		Limit	0.30 mm	0.0118 in.
	Idler gear thrust clearance	STD	0.05 – 0.15 mm	0.0020 – 0.059 in.
		Limit	0.30 mm	0.0118 in.

Specifications (Cont'd)

Cylinder head	Warpage			Limit	0.20 mm	0.0079 in.
	Valve seat	Refacing angle		Intake	25°, 45°, 70°	
				Exhaust	25°, 45°, 60°	
		Contacting angle			45°	
		Contacting width		Intake	1.5 – 1.9 mm	0.059 – 0.075 in.
				Exhaust	1.8 – 2.2 mm	0.071 – 0.087 in.
	Cylinder head bolt outer diameter			STD	10.800 – 11.000 mm	0.4252 – 0.4331 in.
				Limit	10.55 mm	0.4154 in.
	New cylinder head gasket thickness					
	1PZ	Hole number "1"			1.16 – 1.24 mm	0.0457 – 0.0488 in.
		Hole number "3"			1.26 – 1.34 mm	0.0496 – 0.0528 in.
		Hole number "5"			1.36 – 1.44 mm	0.0535 – 0.0567 in.
	1HZ and 1HD-T	Cutout number "1"			1.15 – 1.25 mm	0.0453 – 0.0492 in.
		Cutout number "3"			1.25 – 1.35 mm	0.0492 – 0.0531 in.
		Cutout number "5"			1.35 – 1.45 mm	0.0531 – 0.0571 in.
Valve guide bushing	Inside diameter				8.010 – 8.030 mm	0.3154 – 0.3161 in.
	Outside diameter			STD	13.004 – 13.025 mm	0.5112 – 0.5128 in.
				O/S 0.05	13.054 – 13.075 mm	0.5154 – 0.5148 in.
Valve	Valve overall length		STD	Intake	103.29 – 103.69 mm	4.0655 – 4.0823 in.
				Exhaust	103.14 – 103.54 mm	4.0606 – 4.0764 in.
			Limit	Intake	102.79 mm	4.0468 in.
				Exhaust	102.64 mm	4.0409 in.
	Valve face angle				44.5°	
	Stem diameter			Intake	7.975 – 7.990 mm	0.3140 – 0.3146 in.
				Exhaust	7.960 – 7.975 mm	0.3134 – 0.3140 in.
	Stem oil clearance		STD	Intake	0.020 – 0.055 mm	0.0008 – 0.0022 in.
				Exhaust	0.035 – 0.070 mm	0.0014 – 0.0028 in.
			Limit	Intake	0.08 mm	0.0031 in.
				Exhaust	0.10 mm	0.0039 in.
	Margin thickness		STD	Intake	1.6 mm	0.063 in.
				Exhaust	1.7 mm	0.067 in.
			Limit	Intake	1.1 mm	0.043 in.
				Exhaust	1.2 mm	0.047 in.
Valve spring	Free length					
	Yellow painted mark				46.20 mm	1.8189 in.
	Blue painted mark				49.14 mm	1.9346 in.
	Installed tension at 37.0 mm (1.457 in.)				30.7 – 33.9 kg (67.7 – 74.7 lb, 301 – 332 N)	
	Squareness			Limit	2.0 mm	0.075 in.
Valve lifter	Lifter diameter				40.892 – 40.902 mm	1.6099 – 1.6103 in.
	Cylinder head lifter bore diameter				40.960 – 40.980 mm	1.6126 – 1.6134 in.
	Oil clearance			STD	0.058 – 0.083 mm	0.0023 – 0.0033 in.
				Limit	0.10 mm	0.0039 in.
Manifold	Warpage			Limit	0.40 mm	0.0157 in.

Specifications (Cont'd)

Camshaft	Thrust clearance		STD	0.10 – 0.20 mm	0.0039 – 0.0079 in.
			Limit	0.30 mm	0.0118 in.
	Journal oil clearance				
	No.1 journal		STD	0.022 – 0.074 mm	0.0009 – 0.0029 in.
			Limit	0.10 mm	0.0039 in.
	Others		STD	0.030 – 0.066 mm	0.0012 – 0.0026 in.
			Limit	0.10 mm	0.0039 in.
	Journal diameter				
	No.1 journal		STD	34.969 – 34.985 mm	1.3767 – 1.3774 in.
	Others			27.986 – 27.998 mm	1.1018 – 1.1023 in.
	Circle runout		Limit	0.10 mm	0.0039 in.
	Cam lobe height				
	1PZ and 1HZ	STD	Intake	55.090 – 55.110 mm	2.1689 – 2.1697 in.
			Exhaust	55.940 – 55.960 mm	2.2024 – 2.2031 in.
		Limit	Intake	54.59 mm	2.1419 in.
			Exhaust	55.44 mm	2.1827 in.
	1HD-T	STD	Intake	54.440 – 54.460 mm	2.1433 – 2.1441 in.
			Exhaust	55.940 – 55.960 mm	2.2024 – 2.2031 in.
		Limit	Intake	53.94 mm	2.1236 in.
			Exhaust	55.44 mm	2.1827 in.
Combustion chamber (1PZ and 1HZ)	Protrusion			Minus 0.04 – Plus 0.04 mm	Minus 0.0016 – Plus 0.0016 in.
	Shim thickness			0.03 mm	0.0012 in.
Cylinder block	Cylinder head surface warpage		Limit	0.20 mm	0.0079 in.
	Cylinder bore diameter				
		STD	Mark "1"	94.000 – 94.010 mm	3.7008 – 3.7012 in.
			Mark "2"	94.010 – 94.020 mm	3.7012 – 3.7016 in.
			Mark "3"	94.020 – 94.030 mm	3.7016 – 3.7020 in.
		Limit	STD	94.23 mm	3.7098 in.
			O/S 0.50	94.73 mm	3.7295 in.
	Main journal bore diameter (Reference)	STD	Mark "1"	71.000 – 71.006 mm	2.7953 – 2.7955 in.
			Mark "2"	71.006 – 71.012 mm	2.7955 – 2.7957 in.
			Mark "3"	71.012 – 71.018 mm	2.7957 – 2.7960 in.
Piston and piston ring	Piston diameter	STD	Mark "1"	93.95 – 93.96 mm	3.6988 – 3.6992 in.
			Mark "2"	93.96 – 93.97 mm	3.6992 – 3.7000 in.
			Mark "3"	93.97 – 93.98 mm	3.7000 – 3.7000 in.
		O/S 0.50		94.45 – 94.48 mm	3.7185 – 3.7197 in.
	Piston oil clearance		STD	0.04 – 0.06 mm	0.0016 – 0.0024 in.
			Limit	0.14 mm	0.0055 in.
	Piston ring groove clearance		No.1	0.050 – 0.095 mm	0.0020 – 0.0037 in.
			No.2	0.060 – 0.100 mm	0.0024 – 0.0039 in.
			Oil	0.030 – 0.070 mm	0.0012 – 0.0028 in.
	Piston ring end gap	STD	No.1	0.27 – 0.54 mm	0.0106 – 0.0213 in.
			No.2	0.40 – 0.62 mm	0.0118 – 0.0244 in.
			Oil	0.20 – 0.52 mm	0.0079 – 0.0205 in.
		Limit	No.1	1.34 mm	0.0591 in.
			No.2	1.42 mm	0.0551 in.
			Oil	1.32 mm	0.0520 in.

Specification (Cont'd)

Connecting rod	Thrust clearance		STD	0.10 – 0.20 mm	0.0039 – 0.0079 in.
			Limit	0.30 mm	0.0118 in.
	Connecting rod oil clearance				
	STD	STD		0.036 – 0.054 mm	0.0014 – 0.0021 in.
		U/S 0.25, U/S 0.50		0.037 – 0.077 mm	0.0015 – 0.0030 in.
	Limit			0.10 mm	0.0039 in.
	Connecting rod bearing center wall thickness				
	(Reference)	STD	Mark "2"	1.486 – 1.489 mm	0.0585 – 0.0586 in.
			Mark "3"	1.489 – 1.492 mm	0.0586 – 0.0587 in.
			Mark "4"	1.492 – 1.495 mm	0.0587 – 0.0589 in.
			Mark "5"	1.495 – 1.498 mm	0.0589 – 0.0590 in.
			Mark "6"	1.498 – 1.501 mm	0.0590 – 0.0591 in.
	Rod bending	Limit per 100 mm (3.94 in.)		0.03 mm	0.0012 in.
	Twist	Limit per 100 mm (3.94 in.)		0.15 mm	0.0059 in.
	Connecting rod bolt outer diameter		STD	8.300 – 8.400 mm	0.3268 – 0.3307 in.
			Limit	7.95 mm	0.3130 in.
	Bushing inside diameter				
	1PZ and 1HZ			29.008 – 29.020 mm	1.1420 – 1.1425 in.
	1HD-T			33.008 – 33.020 mm	1.2995 – 1.3000 in.
	Piston pin diameter				
	1PZ and 1HZ			29.000 – 29.012 mm	1.1417 – 1.1422 in.
	1HD-T			33.000 – 33.012 mm	1.2992 – 1.2997 in.
	Piston pin oil clearance		STD	0.004 – 0.012 mm	0.0002 – 0.0005 in.
			Limit	0.03 mm	0.0012 in.
	Big end inner diameter				
	(Reference)	STD	Mark "1"	62.014 – 62.020 mm	2.4415 – 2.4417 in.
			Mark "2"	62.020 – 62.026 mm	2.4417 – 2.4420 in.
			Mark "3"	62.026 – 62.032 mm	2.4420 – 2.4422 in.
Crankshaft	Thrust clearance		STD	0.04 – 0.24 mm	0.0016 – 0.0094 in.
			Limit	0.30 mm	0.0118 in.
	Thrust washer thickness		STD	2.930 – 2.980 mm	0.1154 – 0.1173 in.
	Main journal oil clearance				
	STD	STD		0.036 – 0.054 mm	0.0014 – 0.0021 in.
		U/S 0.25, U/S 0.50		0.037 – 0.077 mm	0.0015 – 0.0030 in.
	Limit			0.10 mm	0.0039 in.
	Main journal diameter	STD	Mark "1"	66.994 – 57.000 mm	2.7953 – 2.7955 in.
			Mark "2"	66.988 – 66.994 mm	2.7955 – 2.7957 in.
			Mark "3"	66.982 – 66.988 mm	2.7957 – 2.7960 in.
		U/S 0.25		66.745 – 66.755 mm	2.6278 – 2.3132 in.
		U/S 0.50		66.495 – 66.505 mm	2.6179 – 2.3033 in.
	Main bearing center wall thickness				
	(Reference)	STD	Mark "2"	1.486 – 1.489 mm	0.0585 – 0.0586 in.
			Mark "3"	1.489 – 1.492 mm	0.0586 – 0.0587 in.
			Mark "4"	1.492 – 1.495 mm	0.0587 – 0.0589 in.
			Mark "5"	1.495 – 1.498 mm	0.0589 – 0.0590 in.
			Mark "6"	1.498 – 1.501 mm	0.0590 – 0.0591 in.
	Crank pin diameter	STD	Mark "1"	58.994 – 59.000 mm	2.3226 – 2.3228 in.
			Mark "2"	58.988 – 58.994 mm	2.3224 – 2.3226 in.
			Mark "3"	58.982 – 58.988 mm	2.3221 – 2.3224 in.
		U/S 0.25		58.745 – 58.755 mm	2.3128 – 2.3132 in.
		U/S 0.50		58.495 – 58.505 mm	2.3029 – 2.3033 in.
	Circle runout		Limit	0.06 mm	0.0024 in.
	Main journal taper and out-of-round		Limit	0.02 mm	0.0008 in.
	Crank pin taper and out-of-round		Limit	0.02 mm	0.0008 in.
Main bearing	Main bearing cap bolt outer diameter				
			STD	11.800 – 12.000 mm	0.4646 – 0.4724 in.
			Limit	11.50 mm	0.4528 in.

Torque Specifications

Part tightened			kg-cm	ft-lb	N·m
Injection pump × Timing gear case			185	13	18
Injection pump × Injection pump stay			700	51	69
Injection pump distributive head plug bolt					
1PZ and 1HZ			170	12	17
1HD-T			250	18	25
No.1 camshaft timing pulley × Camshaft			1,000	72	98
No.2 camshaft timing pulley × Injection pump drive gear			315	23	31
Idler pulley bolt × Cylinder head			270	20	26
Spring bolt × Cylinder head			270	20	26
Injection pump drive gear × Injection pump			1,000	27	98
Idler gear (thrust plate) × Cylinder block			400	29	39
Timing gear cover × Timing gear case			200	14	20
Timing gear cover × Cylinder block			200	14	20
No.1 crankshaft pulley × Crankshaft			5,000	362	490
No.2 crankshaft pulley × No.1 crankshaft pulley			250	18	25
Vacuum pump × Timing gear case			400	29	39
Oil pipe × Vacuum pump			185	13	18
Oil pipe × Cylinder block			185	13	18
Cylinder head × Cylinder block		1st	700	51	69
		2nd	90° turns		
		3rd	90° turns		
Camshaft bearing cap × Cylinder head	No.1 journal		250	18	25
	Others		185	13	18
Camshaft oil seal retainer × Cylinder head			200	14	20
Exhaust manifold × Cylinder head			400	29	39
(For additional tighteninig torque)			330	24	32
Glow plug × Cylinder head			130	9	13
Injection nozzle × Cylinder head		1PZ and 1HZ	650	47	64
		1HD-T	400	29	39
Nozzle leakage pipe × Injection nozzle		1PZ and 1HZ	300	22	29
		1HD-T	125	9	12
Water outlet × Cylinder head			200	14	20
Intake manifold × Cylinder head			200	14	20
Oil dipstick guide × Intake manifold			200	14	20
Oil dipstick guide × Oil cooler cover			200	14	20
Main bearing cap × Cylinder head			1,050	76	103
Connecting rod cap × Connecting rod		1st	375	27	37
		2nd	90° turns		
Main bearing cap × Cylinder block		1st	1,050	76	103
		2nd	90° turns		
Oil nozzle × Cylinder block			275	20	27
Rear oil seal retainer × Cylinder block			65	56 in.-lb	6.4
Rear end plate × Cylinder block			185	13	18
Flywheel (M/T) × Crankshaft			1,300	94	127
Flywheel (drive plate) (A/T) × Crankshaft			1,300	94	127

TURBOCHARGER SYSTEM

Specifications

Turbocharger	Turbocharging pressure	0.50 – 0.65 kg/cn^2 (7.1 – 9.2 psi, 49 – 64 kPa)
	Impeller wheel axial play	0.13 mm (0.0051 in.) or less
	Impeller wheel radial play	0.18 mm (0.0071 in.) or less

Torque Specifications

Part tightened	kg-cm	ft-lb	N·m
Turbine outlet elbow × Turbocharger	530	38	52
No.1 turbo water pipe × Turbocharger	80	69 in.-lb	7.8
No.2 turbo heat insulator × Turbocharger	80	69 in.-lb	7.8
Turbocharger × Exhaust manifold	530	38	52
Exhaust manifold × Cylinder head	400	29	39
(For additional tighteninig torque)	330	24	32
Turbo oil pipe × Cylinder block (Union bolt)	185	13	18
Turbo oil pipe × Turbocharger	250	18	25
Turbocharger stay × Cylinder block	1,200	87	118
Turbocharger stay × Turbocharger	1,200	87	118
Turbocharger heat insulator × Turbocharger	185	13	8
Exhaust manifold heat insulator × Exhaust manifold	185	13	18
Intake pipe × Intake manifold	200	14	20

FUEL SYSTEM

Specifications

Fuel heater	Resistance at 20°C (68°F)		0.5 – 2.0 Ω	
Injection nozzles (1PZ and 1HZ)	Nozzle type		DN20PD32	
	Nozzle opening pressure	New nozzle	145 – 155 kg/cm^2 (2,062 – 2,205 psi, 14,220 – 15,200 kPa)	
		Reused nozzle	135 – 155 kg/cm^2 (1,920 – 2,205 psi, 13,239 – 15,200 kPa)	
	Adjusting shim thickness		0.900 mm	0.0354 in.
			0.925 mm	0.0364 in.
			0.950 mm	0.0374 in.
			0.975 mm	0.0384 in.
			1.000 mm	0.0394 in.
			1.025 mm	0.0404 in.
			1.050 mm	0.0413 in.
			1.075 mm	0.0423 in.
			1.100 mm	0.0433 in.
			1.125 mm	0.0443 in.
			1.150 mm	0.0453 in.
			1.175 mm	0.0463 in.
			1.200 mm	0.0472 in.
			1.225 mm	0.0482 in.
			1.250 mm	0.0492 in.
			1.275 mm	0.0502 in.
			1.300 mm	0.0512 in.
			1.325 mm	0.0522 in.
			1.350 mm	0.0531 in.
			1.375 mm	0.0541 in.
			1.400 mm	0.0551 in.
			1.425 mm	0.0561 in.
			1.450 mm	0.0571 in.
			1.475 mm	0.0581 in.
			1.500 mm	0.0591 in.
			1.525 mm	0.0600 in.
			1.550 mm	0.0610 in.
			1.575 mm	0.0620 in.
			1.600 mm	0.0630 in.
			1.625 mm	0.0640 in.
			1.650 mm	0.0650 in.
			1.675 mm	0.0659 in.
			1.700 mm	0.0669 in.
			1.725 mm	0.0679 in.
			1.750 mm	0.0689 in.
			1.775 mm	0.0699 in.
			1.800 mm	0.0709 in.
			1.825 mm	0.0719 in.
			1.850 mm	0.0728 in.
			1.875 mm	0.0738 in.
			1.900 mm	0.0748 in.
			1.925 mm	0.0758 in.
			1.950 mm	0.0768 in.

Specification (Cont'd)

Injection nozzle (1HD-T)	Nozzle type	KBAL	
	Pre-lift dimension	0.08 – 0.10 mm	0.0031 – 0.0039 in.
	Nozzle opening pressure		
	No.2 (Inspection pressure)	132 – 138 kg/cm^2 (1,877 – 1,963 psi, 12,945 – 13,533 kPa)	
	No.1	180 – 190 kg/cm^2 (2,560 – 2,702 psi, 17,652 – 18,633 kPa)	
	Pre-lift and nozzle opening pressure adjusting shim thickness	0.700 mm	0.0276 in.
		0.750 mm	0.0295 in.
		0.800 mm	0.0315 in.
		0.850 mm	0.0335 in.
		0.900 mm	0.0354 in.
		0.950 mm	0.0374 in.
		0.975 mm	0.0384 in.
		1.000 mm	0.0394 in.
		1.025 mm	0.0404 in.
		1.050 mm	0.0413 in.
		1.075 mm	0.0423 in.
		1.100 mm	0.0433 in.
		1.125 mm	0.0443 in.
		1.150 mm	0.0453 in.
		1.175 mm	0.0463 in.
		1.200 mm	0.0472 in.
		1.225 mm	0.0482 in.
		1.250 mm	0.0492 in.
		1.280 mm	0.0504 in.
		1.290 mm	0.0508 in.
		1.300 mm	0.0512 in.
		1.310 mm	0.0516 in.
		1.320 mm	0.0520 in.
		1.330 mm	0.0524 in.
		1.340 mm	0.0528 in.
		1.350 mm	0.0531 in.
		1.360 mm	0.0535 in.
		1.370 mm	0.0539 in.
		1.380 mm	0.0543 in.
		1.390 mm	0.0547 in.
		1.400 mm	0.0551 in.
		1.410 mm	0.0555 in.
		1.420 mm	0.0559 in.
		1.430 mm	0.0563 in.
		1.440 mm	0.0567 in.
		1.450 mm	0.0571 in.
		1.460 mm	0.0575 in.
		1.470 mm	0.0579 in.
		1.480 mm	0.0583 in.
		1.490 mm	0.0587 in.
		1.500 mm	0.0591 in.
		1.510 mm	0.0594 in.
		1.520 mm	0.0598 in.
		1.530 mm	0.0602 in.
		1.540 mm	0.0606 in.
		1.550 mm	0.0610 in.
		1.560 mm	0.0614 in.
		1.570 mm	0.0618 in.
		1.580 mm	0.0622 in.
		1.590 mm	0.0626 in.
		1.600 mm	0.0630 in.

Specification (Cont'd)

Injection nozzles (1HD-T) (cont'd)	Pre-lift and nozzle opening pressure adjusting shim thickness (cont'd)	1.610 mm	0.0634 in.
		1.620 mm	0.0638 in.
		1.630 mm	0.0641 in.
		1.640 mm	0.0646 in.
		1.650 mm	0.0650 in.
		1.660 mm	0.0654 in.
		1.670 mm	0.0657 in.
		1.680 mm	0.0661 in.
		1.690 mm	0.0665 in.
		1.700 mm	0.0669 in.
		1.750 mm	0.0689 in.
		1.800 mm	0.0709 in.
Injection pump	Direction of rotation	Clockwise as seen from drive side	
	Injection order 1PZ	1 – 2 – 4 – 5 – 3 (D – E – A – B – C)	
	1HZ and 1HD-T	1 – 4 – 2 – 6 – 3 – 5 (D – E – F – A – B – C)	
	Roller height variation	0.02 mm	0.0008 in.
	Plunger spring squareness	2.0 mm	0.079 in.
	Spring free length		
	Delivery valve spring		
	1PZ and 1HZ	24.4 mm	0.961 in.
	1HD-T	19.1 mm	0.752 in.
	Plunger spring		
	1PZ and 1HZ	30.0 mm	1.181 in.
	1HD-T	31.2 mm	1.228 in.
	Coupling spring		
	1PZ and 1HZ	16.6 mm	0.654 in.
	1HD-T	15.5 mm	0.610 in.
	Pneumatic bellows spring		
	1PZ and 1HZ (w/ HAC)	35.0 mm	1.378 in.
	Boost compensator spring		
	1HD-T (Europe)	19.7 mm	0.776 in.
	1HD-T (Others w/o BACS)	19.6 mm	0.772 in.
	1HD-T (Others w/ BACS)	21.8 mm	0.858 in.
	Pickup sensor resistance	600 – 800 Ω	
	Timer adjusting screw protrusion pre-setting	7.5 – 8.0 mm	0.295 – 0.315 in.
	Plunger spring shim thickness	0.5 mm	0.020 in.
		0.8 mm	0.031 in.
		1.0 mm	0.039 in.
		1.2 mm	0.047 in.
		1.5 mm	0.059 in.
		1.8 mm	0.071 in.
		2.0 mm	0.079 in.
	Plunger adjusting shim thickness 1PZ	1.9 mm	0.075 in.
		2.0 mm	0.079 in.
		2.1 mm	0.083 in.
		2.2 mm	0.087 in.
		2.3 mm	0.091 in.
		2.4 mm	0.094 in.
		2.5 mm	0.098 in.
		2.6 mm	0.102 in.
		2.7 mm	0.106 in.
		2.8 mm	0.110 in.
		2.9 mm	0.114 in.

Specification (Cont'd)

Injection pump (cont'd)	Plunger adjusting shim thickness 1HZ and 1HD-T (for pre-stroke)	1.90 mm	0.0748 in.
		1.95 mm	0.0768 in.
		2.00 mm	0.0787 in.
		2.05 mm	0.0807 in.
		2.10 mm	0.0827 in.
		2.15 mm	0.0846 in.
		2.20 mm	0.0866 in.
		2.25 mm	0.0886 in.
		2.30 mm	0.0906 in.
		2.35 mm	0.0925 in.
		2.40 mm	0.0945 in.
		2.45 mm	0.0965 in.
		2.50 mm	0.0984 in
		2.55 mm	0.1004 in.
		2.60 mm	0.1024 in.
		2.65 mm	0.1043 in.
		2.70 mm	0.1063 in.
		2.75 mm	0.1083 in.
		2.80 mm	0.1102 in.
		2.85 mm	0.1122 in.
		2.90 mm	0.1142 in.
		2.94 mm	0.1157 in.
		2.99 mm	0.1177 in.
		3.04 mm	0.1197 in.
		3.09 mm	0.1216 in.
		3.14 mm	0.1236 in.
		3.19 mm	0.1256 in.
	Flyweight holder thrust clearance	0.15 – 0.35 mm	0.0059 – 0.0138 in.
	Governor shaft protrusion	0.5 – 2.0 mm	0.020 – 0.079 in.
	Governor gear adjusting washer thickness	1.05 mm	0.0413 in.
		1.25 mm	0.0492 in.
		1.45 mm	0.0571 in.
		1.65 mm	0.0650 in.
		1.85 mm	0.0728 in.
	Boost compensator adjusting shim thickness	1.1 mm	0.039 in.
		1.3 mm	0.051 in.
		1.5 mm	0.059 in.
		1.7 mm	0.067 in.
		1.9 mm	0.075 in.
		2.1 mm	0.083 in.
		2.3 mm	0.090 in.
		2.5 mm	0.098 in.
		2.7 mm	0.106 in.
		2.9 mm	0.114 in.
		3.1 mm	0.122 in.
		3.3 mm	0.130 in.

Injection Pump Adjustment

Preparations of pump tester	Test nozzle type			DN12SD12	
	Test nozzle opening pressure			145 – 155 kg/cm^2 (2,062 – 2,205 psi, 14,220 – 15,200 kPa)	
	Injection pipe				
	Outer diameter			6.0 mm	0.236 in.
	Inner diameter			2.0 mm	0.079 in.
	Length			840 mm	33.07 in.
	Minimum bending radius			25 mm (0.98 in.) or more	
	Fuel temperature			40 – 45°C	
	Fuel feeding pressure			0.2 kg/cm^2 (2.8 psi, 20 kPa)	
Full load injection volume pre-setting	Item	Adjusting lever position	Pump rpm	No. of measuring strokes	Injection volume cc (cu in.)
	1PZ	Maximum speed side	1,200	200	11.78 – 12.18 (0.72 – 0.74)
	1HZ	Maximum speed side	1,200	200	11.80 – 12.20 (0.72 – 0.74)
	1HD-T (w/o BACS)	Maximum speed side	1,800	200	13.58 – 14.18 (0.83 – 0.87)
	1HD-T (w/ BACS)	Maximum speed side	1,800	200	13.14 – 13.74 (0.80 – 0.84)
Maximum speed pre-setting	Item	Adjusting lever position	Pump rpm	No. of measuring strokes	Injection volume cc (cu in.)
	1PZ	Maximum speed side	2,300	200	4.0 – 6.0 (0.24 – 0.37)
	1HZ	Maximum speed side	2,300	200	3.0 – 5.0 (0.18 – 0.31)
	1HD-T	Maximum speed side	2,200	200	3.0 – 5.0 (0.18 – 0.31)
Pump inner pressure	Item	Pump rpm	Inner pressure kg/cm^2 (psi, kPa)		
	1PZ	500	2.45 – 3.05 (35 – 43, 240 – 299)		
		2,000	6.4 – 7.0 (91 – 100, 628 – 686)		
	1HZ	500	2.5 – 3.1 (36 – 44, 245 – 304)		
		2,000	7.1 – 7.7 (101 – 110, 696 – 755)		
	1HD-T (w/o BACS)	400	2.2 – 3.1 (31 – 44, 216 – 304)		
		1,900	8.1 – 8.4 (115 – 119, 794 – 824)		
		2,200	9.0 (128, 883) or less		
	1HD-T (w/ BACS)	400	2.7 – 3.6 (38 – 51, 265 – 353)		
		2,200	8.7 – 9.0 (124 – 128, 853 – 883)		

Injection Pump Adjustment (Cont'd)

Overflow volume	Item	Pump rpm	Overflow volume cc/min. (cu in./min.)		
	1PZ and 1HZ	2,000	366 – 800 (22.3 – 48.8)		
	1HD-T	1,900	583 – 1,083 (35.6 – 66.1)		
Automatic timer	Item	Pump rpm	Piston stroke mm (in.)		
	1PZ	600	0.58 – 1.58 (0.0228 – 0.0622)		
		1,200	3.02 – 4.02 (0.1189 – 0.1583)		
		1,600	4.65 – 5.65 (0.1830 – 0.2224)		
		2,000	6.28 – 7.28 (0.2472 – 0.2866)		
		2,500	6.88 – 7.88 (0.2709 – 0.3102) (LST non-operational)		
	1HZ	600	0.43 – 1.43 (0.0169 – 0.0563)		
		1,200	3.23 – 4.23 (0.1272 – 0.1665)		
		1,600	5.09 – 6.09 (0.2004 – 0.2398)		
		2,000	6.88 – 7.88 (0.2709 – 0.3102)		
		2,500	6.88 – 7.88 (0.2709 – 0.3102) (LST non-operational)		
	1HD-T (Europe)	1,300	1.4 – 2.4 (0.055 – 0.094)		
		1,440	3.0 – 4.0 (0.118 – 0.157)		
		1,700	5.9 – 6.9 (0.232 – 0.272)		
		1,900	7.7 – 8.7 (0.303 – 0.343)		
	1HD-T (Others)	800	1.05 – 2.05 (0.0413 – 0.0807)		
		1,440	4.9 – 5.9 (0.193 – 0.232)		
		1,700	6.42 – 7.42 (0.2528 – 0.2921)		
		1,900	7.7 – 8.7 (0.303 – 0.343)		
Full load injection volume	Item	Adjusting lever angle position	Pump rpm	No. of measuring strokes	Injection volume cc (cu in.)
	1PZ	Plus 21 – 31°	1,200	200	11.78 – 12.18 (0.72 – 0.74)
	1HZ	Plus 21 – 31°	1,200	200	11.80 – 12.20 (0.72 – 0.74)
	1HD-T (w/o BACS)	Plus 21 – 31°	1,100	200	13.58 – 14.18 (0.83 – 0.87)
	1HD-T (w/ BACS)	Plus 21 – 31°	1,100	200	13.14 – 13.74 (0.80 – 0.84)

Injection Pump Adjustment (Cont'd)

Maximum speed	Item	Adjusting lever angle	Pump rpm	No. of measuring strokes	Injection volume cc (cu in.)
	1PZ	Plus 21 – 31°	2,300	200	4.0 – 6.0 (0.24 – 0.37)
			2,500	200	1.0 (0.06) or less
	1HZ	Plus 21 – 31°	2,300	200	3.0 – 5.0 (0.18 – 0.31)
			2,550	200	1.0 (0.06) or less
	1HD-T	Plus 21 – 31°	2,200	200	3.0 – 5.0 (0.18 – 0.31)
			2,350	200	1.0 (0.06) or less

Injection volume	Item	Adjusting lever angle	Pump rpm	No. of measuring strokes	Injection volume cc (cu in.)	Variation limit cc (cu in.)
	1PZ	Plus 21 – 31°	1,200	200	11.78 – 12.18 (0.72 – 0.74)	0.4 (0.02)
			100	200	9.60 – 14.40 (0.59 – 0.88)	1.2 (0.07)
			500	200	10.56 – 11.76 (0.64 – 0.72)	0.6 (0.04)
			2,000	200	11.62 – 12.82 (0.71 – 0.78)	0.6 (0.04)
	1HZ	Plus 21 – 31°	1,200	200	11.80 – 12.20 (0.72 – 0.74)	0.4 (0.02)
			100	200	9.60 – 14.40 (0.59 – 0.88)	1.2 (0.07)
			500	200	9.74 – 10.94 (0.59 – 0.67)	0.6 (0.04)
			2,000	200	10.96 – 12.16 (0.67 – 0.74)	0.6 (0.04)
	1HD-T (Europe)	Plus 21 – 31°	1,100	200	13.52 – 14.72 (0.83 – 0.90)	0.6 (0.04)
			100	200	11.60 – 16.40 (0.71 – 1.00)	1.2 (0.07)
			500	200	8.32 – 9.12 (0.51 – 0.56)	0.6 (0.04)
			1,800	200	13.58 – 14.18 (0.83 – 0.87)	1.2 (0.07)
	1HD-T (Others w/o BACS)	Plus 21 – 31°	1,100	200	11.70 – 12.90 (0.71 – 0.79)	0.6 (0.04)
			100	200	11.60 – 16.40 (0.71 – 1.00)	1.2 (0.07)
			500	200	8.68 – 9.48 (0.53 – 0.58)	0.6 (0.04)
			1,800	200	13.58 – 14.18 (0.83 – 0.87)	1.2 (0.07)

Injection Pump Adjustment (Cont'd)

Injection volume (cont'd)	Item	Adjusting lever angle	Pump rpm	No. of measuring strokes	Injection volume cc (cu in.)	Variation limit cc (cu in.)
	1HD-T (Others w/ BACS)	Plus 21 – 31°	1,100	200	11.70 – 12.90 (0.71 – 0.79)	0.6 (0.04)
			100	200	11.60 – 16.40 (0.71 – 1.00)	1.2 (0.07)
			500	200	8.20 – 9.20 (0.50 – 0.56)	0.6 (0.04)
			1,800	200	13.14 – 14.74 (0.80 – 0.84)	1.2 (0.07)
	Governor sleeve plug head thickness					
	1PZ and 1HZ		3.0 mm	0.118 in.		
			3.1 mm	0.122 in.		
			3.2 mm	0.126 in.		
			3.3 mm	0.130 in.		
			3.4 mm	0.134 in.		
			3.5 mm	0.138 in.		
			3.6 mm	0.142 in.		
			3.7 mm	0.146 in.		
			3.8 mm	0.150 in.		
			3.9 mm	0.154 in.		
			4.0 mm	0.158 in.		
			4.1 mm	0.161 in.		
			4.2 mm	0.165 in.		
	1HD-T		3.0 mm	0.118 in.		
			3.1 mm	0.122 in.		
			3.2 mm	0.126 in.		
			3.3 mm	0.130 in.		
			3.4 mm	0.134 in.		
			3.5 mm	0.138 in.		
			3.6 mm	0.142 in.		
			3.7 mm	0.146 in.		
			3.8 mm	0.150 in.		
			3.9 mm	0.154 in.		
			4.0 mm	0.158 in.		
			4.1 mm	0.161 in.		
			4.2 mm	0.165 in.		
			4.3 mm	0.169 in.		
			4.4 mm	0.173 in.		
			4.5 mm	0.177 in.		
			4.6 mm	0.181 in.		
			4.7 mm	0.185 in.		
			4.8 mm	0.189 in.		
			4.9 mm	0.193 in.		
			5.0 mm	0.197 in.		
			5.1 mm	0.201 in.		
			5.2 mm	0.205 in.		
			5.3 mm	0.209 in.		
			5.4 mm	0.213 in.		
			5.5 mm	0.216 in.		
			5.6 mm	0.220 in.		
			5.7 mm	0.224 in.		
			5.8 mm	0.228 in.		

Injection Pump Adjustment (Cont'd)

Injection volume (cont'd)	Governor sleeve plug head thickness 1HD-T (cont'd)	5.9 mm 6.0 mm 6.1 mm 6.2 mm 6.3 mm 6.4 mm 6.5 mm 6.6 mm	0.232 in. 0.236 in. 0.240 in. 0.244 in. 0.248 in. 0.252 in. 0.256 in. 0.260 in.

	Item	Pump rpm	No. of measuring stroke	Injection volume cc (cu in.)
Full-load minimum injection volume (1HD-T only)	(Europe)	500	200	8.32 – 9.12 (0.51 – 0.56)
	(Others) (w/o BACS)	500	200	8.68 – 9.48 (0.53 – 0.58)
	(Others) (w/ BACS)	500	200	7.54 – 8.34 (0.46 – 0.51)

	Item	Pump rpm	Boost	No. of measuring stroke	Injection volume cc (cu in.)
Boost compensator characteristic (1HD-T only)	(Europe)	1,100	0.48 (6.8, 47)	200	12.44 – 13.44 (0.76 – 0.82)
	(Others) (w/o BACS)	1,100	0.54 (7.7, 53)	200	10.86 – 11.86 (0.66 – 0.72)
	(Others) (w/ BACS)	500	0.50 (7.1, 49)	200	8.20 – 9.20 (0.50 – 0.56)

	Item	Pump rpm	Pressure kg/cm² (psi, kPa)	No. of measuring stroke	Injection volume cc (cu in.)	Hysterises cc (cu in.)
Boost compensator characteristic tendency (1HD-T only)	(Europe)	1,100	0.81 (11.5, 79)	200	13.52 – 14.72 (0.82 – 0.90)	–
		1,100	0.48 (6.8, 47)	200	12.44 – 13.44 (0.76 – 0.82)	–
		1,100	0.27 (3.8, 26)	200	10.50 – 11.70 (0.64 – 0.71)	0.3 (0.02) or less
		1,100	0 (0, 0)	200	9.70 – 11.10 (0.59 – 0.68)	–
	(Others) (w/o BACS)	1,100	0.81 (11.5, 79)	200	11.70 – 12.90 (0.71 – 0.79)	–
		1,100	0.54 (7.7, 53)	200	10.86 – 11.86 (0.66 – 0.72)	–
		1,100	0.41 (5.8, 40)	200	9.48 – 10.68 (0.58 – 0.65)	0.3 (0.02) or less
		1,100	0 (0, 0)	200	8.62 – 10.02 (0.453 – 0.61)	–
	(Others) (w/ BACS)	1,100	1.29 (18.3, 127)	200	11.70 – 12.90 (0.71 – 0.79)	–
		500	0.81 (11.5, 79)	200	9.80 – 11.00 (0.60 – 0.67)	0.3 (0.02) or less
		500	0.50 (7.1, 49)	200	8.20 – 9.20 (0.50 – 0.56)	–
		500	0 (0, 0)	200	7.54 – 8.34 (0.46 – 0.51)	–

Injection Pump Adjustment (Cont'd)

Load sensing timer (w/o HAC only)	Item	Pump rpm	No. of measuring strokes	Injection volume cc (cu in.)	Remark
	1PZ	1,600	200	Measured value at step (f) minus 1.4 (0.09) ± 0.3 (0.02)	Set to starting point
	1HZ	1,600	200	Measured value at step (f) minus 1.4 (0.09) ± 0.3 (0.02)	
	1HD-T (Europe)	1,800	200	Measured value at step (f) minus 1.6 (0.10) ± 0.6 (0.04)	
	1HD-T (Others)	1,800	200	Measured value at step (f) minus 1.2 (0.07) ± 0.2 (0.01)	
	1PZ	1,600	200	9.08 – 9.88 (0.55 – 0.60)	Check ending point
	1HZ	1,600	200	8.2 (0.50) or more	
	Item	Pump rpm		Timer piston fluctuation mm (in.)	
	1PZ	1,600		2.19 – 3.19 (0.0862 – 0.1256)	
	1HZ	1,600		2.73 – 3.73 (0.1075 – 0.1469)	
	1HD-T (Europe)	1,440		0.70 – 1.70 (0.0276 – 0.0670)	
	1HD-T (Others)	1,440		1.96 – 2.96 (0.0772 – 0.1165)	

Idle speed	Item	Adjusting lever angle	Pump rpm	No. of measuring strokes	Injection volume cc (cu in.)	Variation limit cc (cu in.)
	1PZ	Minus 12 – 22°	325	200	q = 2.94 – 3.94 (0.18 – 0.24)	0.4 (0.02)
			300	200	More than q plus 0.5 (0.03)	–
			400	200	q minus 1.2 – 2.2 (0.07 – 0.13)	–
	1HZ (M/T)	Minus 12 – 22°	375	200	q = 2.30 – 3.30 (0.14 – 0.20)	0.4 (0.02)
			350	200	More than q plus 0.5 (0.03)	–
			450	200	q minus 1.2 – 2.2 (0.07 – 0.13)	–
			325	200	2.60 – 3.60 (0.16 – 0.22)	0.4 (0.02)
	1HZ (A/T)	Minus 12 – 22°	375	200	q = 2.30 – 3.30 (0.07 – 0.20)	0.4 (0.02)
			350	200	More than q plus 0.5 (0.03)	–
			450	200	q minus 1.2 – 2.2 (0.07 – 0.13)	–
			375	200	1.64 – 2.64 (0.10 – 0.16)	0.4 (0.02)

Injection Pump Adjustment (Cont'd)

Idle speed (cont'd)	Item	Adjusting lever angle	Pump rpm	No. of measuring strokes	Injection volume cc (cu in.)	Variation limit cc (cu in.)
	1HD-T (Europe M/T)	Full position	400	200	9.32 – 11.72 (0.57 – 0.72)	–
		Minus 12 – 22°	325	200	q = 3.70 – 4.70 (0.23 – 0.29)	0.4 (0.02)
			300	200	More than q plus 0.5 (0.03)	–
	1HD-T (Europe A/T)	Full position	400	200	10.30 – 12.70 (0.63 – 0.77)	–
		Minus 12 – 22°	325	200	q = 2.84 – 3.84 (0.17 – 0.23)	0.4 (0.02)
			300	200	More than q plus 0.5 (0.03)	–
	1HD-T (Others M/T)	Full position	400	200	9.20 – 11.60 (0.56 – 0.71)	–
		Minus 12 – 22°	325	200	q = 3.70 – 4.70 (0.23 – 0.29)	0.4 (0.02)
			300	200	More than q plus 0.5 (0.03)	–
	1HD-T (Others A/T)	Full position	400	200	10.18 – 12.58 (0.62 – 0.77)	–
		Minus 12 – 22°	325	200	q = 2.84 – 3.84 (0.17 – 0.23)	0.4 (0.02)
			300	200	More than q plus 0.5 (0.03)	–
Dash pot	Item	Pump rpm	No. of measuring stroke		Injection volume cc (cu in.)	Remark
	1HZ	700	200		q = 0.5 – 0.9 (0.03 – 0.05)	Lever set
		700	200		q Plus 0.2 – 0.3 (0.01 – 0.02)	Adjust
	1HD-T	400	200		q = 0.1 – 0.3 (0.01 – 0.02)	Lever set
		400	200		q Plus 0.2 – 0.3 (0.01 – 0.02)	Adjust
Fast idle (w/ ACSD)	1PZ and 1HZ at fuel temperature 15°C (59°F) at fuel temperature 30°C (86°F) 1HD-T at fuel temperature 15°C (59°F) at fuel temperature 40°C (104°F)		1.3 mm 0 mm 1.6 mm 0 mm		0.051 in. 0 in. 0.063 in. 0 in.	
Adjusting lever	Lever moving angle		38 – 48°			

Torque Specifications

Part tightened	kg-cm	ft-lb	N·m
Nozzle holder body × Nozzle holder retaining nut (1PZ and 1HZ)	375	27	37
Injection nozzle × Cylinder head (1PZ and 1HZ)	650	47	64
Nozzle leakage pipe × Injection nozzle (1PZ and 1HZ)	300	22	29
Injection pipe × Injection nozzle (1PZ and 1HZ)	150	11	15
Injection pipe × Injection pump (1PZ and 1HZ)	150	11	15
Nozzle holder body × Nozzle holder retaining nut (1HD-T)	350	25	34
Injection nozzle × Cylinder head (1HD-T)	400	29	39
Nozzle leakage pipe × Injection nozzle (1HD-T)	125	9	12
Injection pipe × Injection nozzle (1HD-T)	250	18	25
Injection pipe × Injection pump (1HD-T)	250	18	25
Fuel inlet hollow screw × Injection pump body	375	27	37
Regulator valve × Injection pump body	90	78 in.-lb	8.8
Feed pump cover × Injection pump body	25	25 in.-lb	2.5
Distributive head × Injection pump body	120	9	12
Governor link support bolt	140	10	14
Delivery valve holder × Distributive head			
(1PZ and 1HZ)	500	36	49
(1HD-T)	550	40	54
Distributive head plug × Distributive head			
(1PZ and 1HZ)	700	51	69
(1HD-T)	900	65	88
Governor cover × Injection pump body	85	74 in.-lb	8.3
Fuel cut solenoid × Distributive head	225	16	22
Pickup sensor × Injection pump body	210	15	21
Fuel inlet pipe × Injection pump	230	17	23
Fuel outlet pipe × Injection pump	230	17	23
Injection pump × Timing gear case	185	13	18
Pump stay × Injection pump	700	51	69
Injection pump drive gear × Injection pump	1,000	72	98
Distributive head plug bolt	170	12	17

COOLING SYSTEM

Specifications

Engine coolant capacity			See page A-2
Radiator cap	Relief valve opening pressure	STD	0.75 – 1.05 kg/cm^2 (10.7 – 14.9 psi, 74 – 103 kPa)
		Limit	0.6 kg/cm^2 (8.5 psi, 59 kPa)
Thermostat	Valve opening temperature		74 – 78°C 187 – 194°F
	Valve lift	at 90°C (194°F)	10 mm (0.39 in.) or more

Torque Specifications

Part tightened	kg-cm	ft-lb	N·m
Cylinder block × Drain plug	250	18	25
Water pump × Cylinder block	200	14	20
Alternator adjusting bar (water pump) × Cylinder block	400	29	39
Water pump pulley × Pulley seat	200	14	20
Water inlet × Water inlet housing	200	14	20

LUBRICATION SYSTEM

Specifications

Engine oil capacity			See page A-2	
Oil pressure		at idling	0.3 kg/cm^2 (4.3 psi, 29 kPa) or more	
		at 3,000 rpm	2.5 kg/cm^2 (36 psi, 245 kPa) or more	
Oil pump	Body clearance	STD	0.10 – 0.17 mm	0.0039 – 0.0067 in.
		Limit	0.20 mm	0.0079 in.
	Side clearance	STD	0.03 – 0.09 mm	0.0012 – 0.0035 in.
		Limit	0.15 mm	0.0059 in.
	Tip clearance	STD	0.08 – 0.16 mm	0.0031 – 0.0063 in.
		Limit	0.21 mm	0.0083 in.

Torque specifications

Part tightened	kg-cm	ft-lb	N·m
Engine oil drain plug	250	18	25
Relief valve plug × Timing gear case	425	31	42
Oil pump (timing gear case) × Cylinder block	200	14	20
Oil pump (timing gear case) × Injection pump	185	13	18
Oil strainer × Cylinder Block	90	78 in.-lb	8.8
Oil pan × Cylinder block			
(timing gear case, rear oil seal retainer)	100	7	10
Engine drain cock × Oil cooler cover	200	14	20
Check valve × Oil cooler cover	275	20	27
Oil cooler cover × Cylinder block	200	14	20
Oil dipstick guide × Intake manifold	200	14	20
Oil dipstick guide × Oil cooler cover	200	14	20
Oil nozzle check valve × Cylinder block	275	20	27

STARTING SYSTEM

Pre-heating system	Light lighting time		
	Supper glow type		See pages ST-3, 4
	Fixed delay type		
	HZJ and HDJ ex. (Europe and Australia)		Approx. 5 seconds
	PZJ, HZJ75, HZB and HDB ex. (Europe and Australia)	12 V type	Approx. 6 seconds
		24 V type	Approx. 5 seconds
	Water temp. sensor resistance		
		at – 20°C (– 4°F)	10 – 20 kΩ
		at 0°C (32°F)	4 – 7 kΩ
		at 20°C (68°F)	2 – 3 kΩ
		at 40°C (104°F)	0.9 – 1.3 kΩ
		at 60°C (140°F)	0.4 – 0.7 kΩ
		at 80°C (176°F)	0.2 – 0.4 kΩ
Starter	Rated voltage and output power		12 V 2.5 kW, 24 V 4.5 kW
	No-load characteristic		
	Current	12 V type	180 A or less at 11.0 V
		24 V type	90 A or less at 23.0 V
	rpm		3,500 rpm or more
	Commutator Outer diameter	STD	36.0 mm 1.417 in.
		Limit	35.0 mm 1.378 in.
	Undercut depth	STD	0.7 – 0.9 mm 0.028 – 0.035 in
		Limit	0.2 mm 0.008 in.
	Circle runout	Limit	0.05 mm 0.0020 in.
	Brush Length	STD	20.5 – 21.0 mm 0.807 – 0.827 in.
		Limit	13.0 mm 0.512 in.
	Spring installed load		3.2 – 4.0 kg (7.1 – 8.8 lb, 31 – 39 N)

CHARGING SYSTEM

Drive belt deflection and tension			See page A-2
Battery specific gravity	when fully charge at 20°C (68°F)		
	95D31R and 95D31L		1.25 – 1.27
	ex. (95D31R and 95D31L)		1.27 – 1.29
Alternator	Rated output		12 V 45 A, 12 V 55 A, 12 V 60 A, 12 V 80 A, 12 V 100 A, 24 V 30A, 24 V 55 A
	Rotor coil resistance	12 V type	2.7 – 3.1 Ω
		24 V type	1.0 – 1.4 Ω
	Slip ring diameter	STD	14.2 – 14.4 mm 0.559 – 0.567 in.
		Limit	12.8 mm 0.504 in.
	Brush exposed length	STD	10.5 mm 0.413 in.
		Limit	1.5 mm 0.059 in.
Alternator regulator	Regulating voltage		
	12 V type	at 25°C (77°F)	14.0 – 15.0 V
		at 115°C (239°F)	13.5 – 14.3 V
	24 V type	at 25°C (77°F)	27.7 – 28.7 V
		at 115°C (239°F)	26.0 – 28.7 V

STANDARD BOLT TORQUE SPECIFICATIONS

Page

STANDARD BOLT TORQUE SPECIFICATIONS B-2

STANDARD BOLT TORQUE SPECIFICATIONS

HOW TO DETERMINE BOLT STRENGTH

	Mark	Class		Mark	Class
Hexagon head bolt	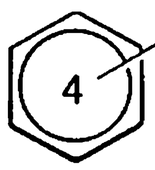 Bolt head No. 4– 5– 6– 7– 8– 9– 10– 11–	4T 5T 6T 7T 8T 9T 10T 11T	Stud bolt	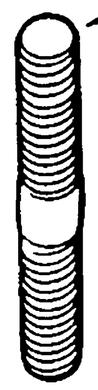 No mark	4T
	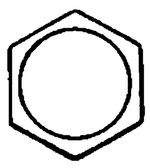 No mark	4T		Grooved	6T
Hexagon flange bolt w/ washer hexagon bolt	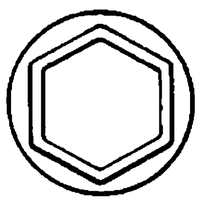 No mark	4T	Welded bolt	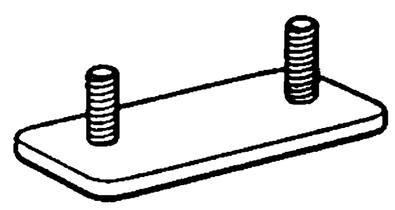	4T
Hexagon head bolt	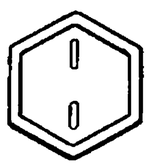 Two protruding lines	5T			
Hexagon flange bolt w/ washer hexagon bolt	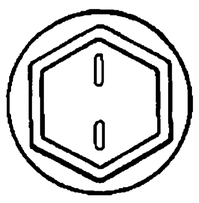 Two protruding lines	6T			
Hexagon head bolt	Three protruding lines	7T			
Hexagon head bolt	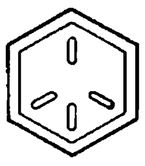 Four protruding lines	8T			

SPECIFIED TORQUE FOR STANDARD BOLTS

Class	Diameter mm	Pitch mm	Specified torque					
			Hexagon head bolt			Hexagon flange bolt		
			kg-cm	ft-lb	N·m	kg-cm	ft-lb	N·m
4T	6	1	55	48 in.-lb	5	60	52 in.-lb	6
	8	1.25	130	9	12.5	145	10	14
	10	1.25	260	19	26	290	21	29
	12	1.25	480	35	47	540	39	53
	14	1.5	760	55	74	850	61	84
	16	1.5	1,150	83	115	—	—	—
5T	6	1	65	56 in.-lb	6.5	75	65 in.-lb	7.5
	8	1.25	160	12	15.5	175	13	17.5
	10	1.25	330	24	32	360	26	36
	12	1.25	600	43	59	670	48	65
	14	1.5	930	67	91	1,050	76	100
	16	1.5	1,400	101	140	—	—	—
6T	6	1	80	69 in.-lb	8	90	78 in.-lb	9
	8	1.25	195	14	19	210	15	21
	10	1.25	400	29	39	440	32	44
	12	1.25	730	53	71	810	59	80
	14	1.5	1,100	80	110	1,250	90	125
	16	1.5	1,750	127	170	—	—	—
7T	6	1	110	8	10.5	120	9	12
	8	1.25	260	19	25	290	21	28
	10	1.25	530	38	52	590	43	58
	12	1.25	970	70	95	1,050	76	105
	14	1.5	1,500	108	145	1,700	123	165
	16	1.5	2,300	166	230	—	—	—
8T	8	1.25	300	22	29	330	24	33
	10	1.25	620	45	61	690	50	68
	12	1.25	1,100	80	110	1,250	90	120
9T	8	1.25	340	25	34	380	27	37
	10	1.25	710	51	70	790	57	78
	12	1.25	1,300	94	125	1,450	105	140
10T	8	1.25	390	28	38	430	31	42
	10	1.25	800	58	78	890	64	88
	12	1.25	1,450	105	140	1,600	116	155
11T	8	1.25	430	31	42	480	35	47
	10	1.25	890	64	87	990	72	97
	12	1.25	1,600	116	155	1,800	130	175

SST AND SSM

	Page
SST (SPECIAL SERVICE TOOLS)	C-2
SSM (SPECIAL SERVICE MATERIALS)	C-6

SST (SPECIAL SERVICE TOOLS)

Section / Part Name / Part No. / Illustration			EM	TC	FU	CO	LU	ST	CH	Note
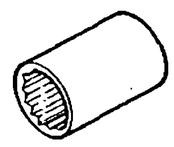	09011-38121	12 mm Socket Wrench for 12 Pointed Head	●							
	09032-00100	Oil Pan Seal Cutter					●			
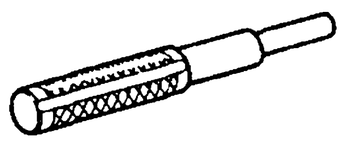	09201-60011	Valve Guide Bushing Remover & Replacer	●							
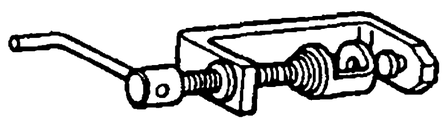	09202-43013	Valve Spring Compressor	●							
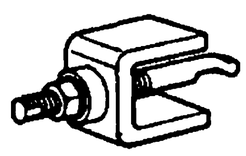	09208-48010	Combustion Chamber Remover	●							1PZ and 1HZ
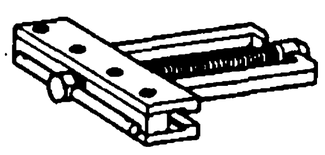	09213-36020	Timing Gear Remover	●							
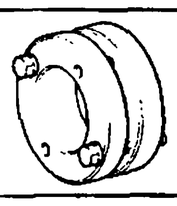	09213-58011	Crankshaft Pulley Holding Tool	●							
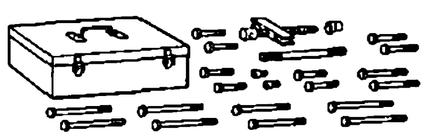	09213-60017	Crankshaft Pulley & Gear Puller Set	●		●					
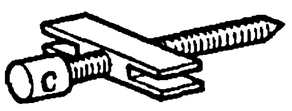	(09213-00020)	(Body with Bolt)	●		* ●					Injection pump
	(09213-00030)	(Handle)	●		* ●					Injection pump
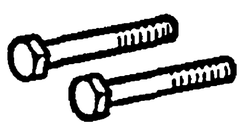	(09213-00060)	(Bolt Set)	●		* ●					Injection pump
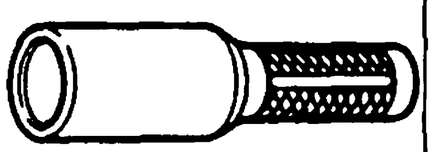	09214-60010	Crankshaft Pulley & Gear Replacer	●							
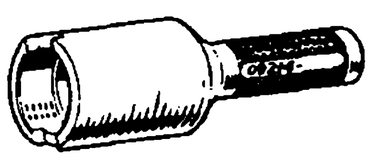	09214-76011	Crankshaft Pulley Replacer	●							Pump drive gear oil seal
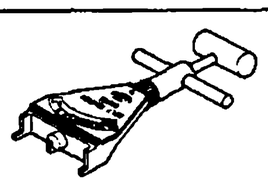	09216-00020	Belt Tension Gauge							●	

SST (SPECIAL SERVICE TOOLS) (Cont'd)

Section / Part Name / Part No. / Illustration			EM	TC	FU	CO	LU	ST	CH	Note
	09216-00030	Belt Tension Gauge Cable							●	
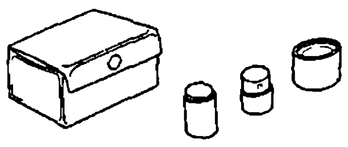	09222-17010	Connecting Rod Bushing Remover & Replacer	●							
	(09222-05020)	(Remover & Replacer)	●							1HD-T
	(09222-05030)	(Guide)	●							1HD-T
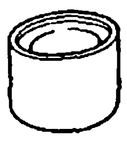	(09222-05040)	(Base)	●							1HD-T
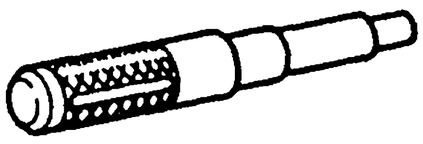	09222-66010	Connecting Rod Bushing Remover & Replacer	●							1PZ and 1HZ
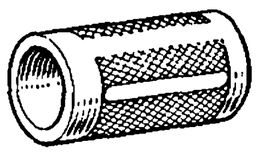	09223-00010	Cover & Seal Replacer	●							Timing gear
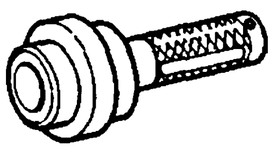	09223-46011	Crankshaft Front Oil Seal Replacer	●							Camshaft retainer oil seal
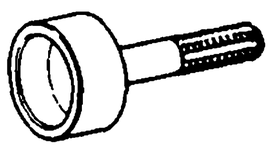	09223-56010	Crankshaft Rear Oil Seal Replacer	●							
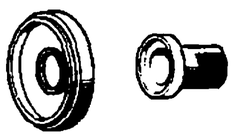	09223-78010	Crankshaft Oil Seal Replacer	●							
	09228-10001	Oil Filter Wrench					●			
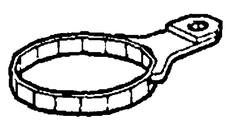	09228-64010	Fuel Filter Wrench			●					
	09236-00101	Water Pump Overhaul Tool Set			●					
	(09237-00070)	(Shaft "C")			●					Governor sleeve plug

SST (SPECIAL SERVICE TOOLS) (Cont'd)

Section / Part Name / Part No. / Illustration			EM	TC	FU	CO	LU	ST	CH	Note
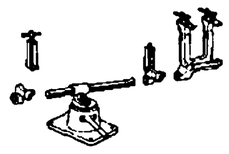	09241-76022	Injection Pump Stand Set			●					
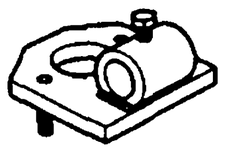	09245-54010	Injection Pump Stand Arm			●					
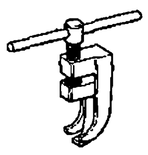	09248-64011	Valve Clearance Adjusting Tool	●							
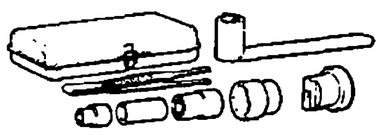	09260-54012	Injection Pump Tool Set			●					
	(09262-54010)	(Distributor Head Plug Wrench)			●					
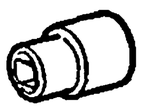	(09262-54020)	(Regulator Valve Wrench)			●					
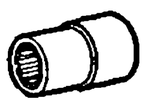	(09269-54020)	(Socket 14 mm)			●					
	(09269-54030)	(Tweezers)			●					
	(09269-54040)	(Governor Lever Support Bolt Wrench)			●					
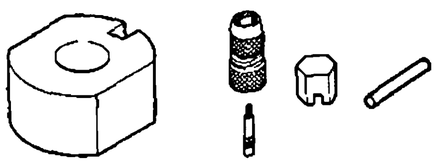	09268-17010	2 Spring Nozzle Tool Set			●					1HD-T
	09268-64010	Injection Nozzle Wrench Set	●		●					1PZ and 1HZ
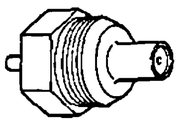	09275-17010	Pre-stroke Mearing Adapter			●					1HZ and 1HD-T
	(09751-19004)	(O-Ring)			●					1HZ and 1HD-T
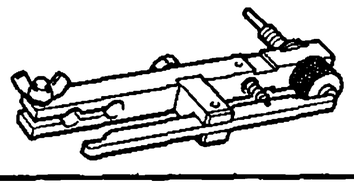	09275-54011	Plunger Stroke Measuring Tool	●							

SST (SPECIAL SERVICE TOOLS) (Cont'd)

Section / Part Name / Part No. / Illustration			EM	TC	FU	CO	LU	ST	CH	Note
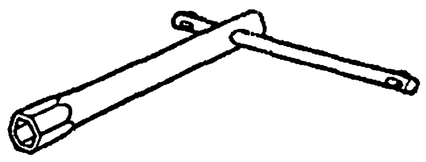	09275-54020	Maximum Speed Adjusting Screw Lock Nut Wrench	●							w/ HAC and 1HD-T
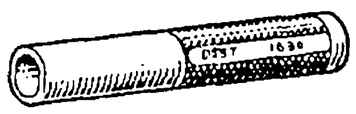	09285-76010	Injection Pump Camshaft Bearing Cone Replacer						*1 ●	*2 ●	*1 Starter front bearing *2 Rotor rear bearing
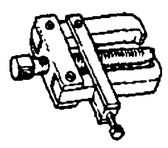	09286-46011	Injection Pump Spline Shaft Puller						*1 ●	*2 ●	*1 Starter bearing *2 Rectifier end frame
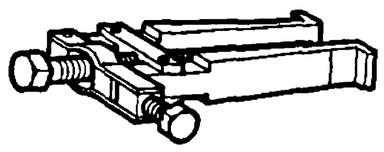	09308-10010	Oil Seal Puller	●							
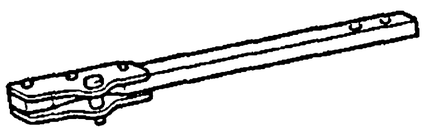	09330-00021	Companion Flange Holding Tool	*1*2 ●		*3 ●					*1 Crankshaft pulley *2 Pump drive gear *3 Injection pump
	09608-20012	Front Hub & Drive Pinion Bearing Tool Set							●	
	(09608-00030)	(Replacer)							●	Rotor front bearing
	09717-20010	Brake Shoe Return Spring Remover	●							Timing belt tension spring
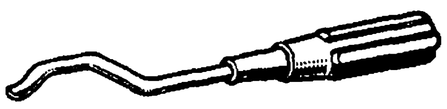	09718-20010	Brake Shoe Return Spring Replacer	●							Timing belt tension spring
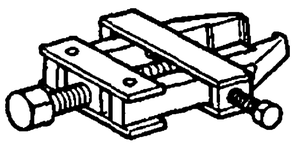	09820-00021	Alternator Rear Bearing Puller							●	
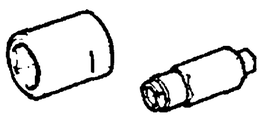	09820-63010	Alternator Pulley Set Nut Wrench Set							●	
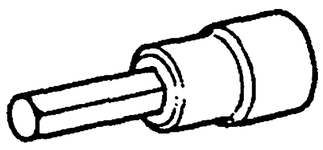	09923-00020	Hexago 8 mm Wrench	●							
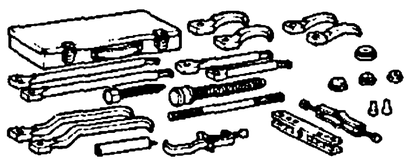	09950-20017	Universal Puller	●							
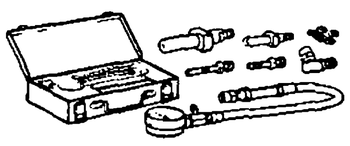	09992-00024	Cylinder Compression Check Gauge Set	●							

SST (SPECIAL SERVICE TOOLS) (Cont'd)

Section / Part Name / Part No. / Illustration			EM	TC	FU	CO	LU	ST	CH	Note
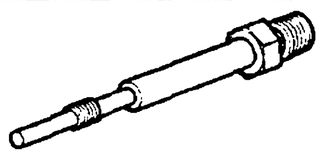	(09992-00160)	(No. 5 Attachment)	●							
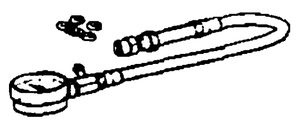	(09992-00211)	(Gauge Assy)	●							
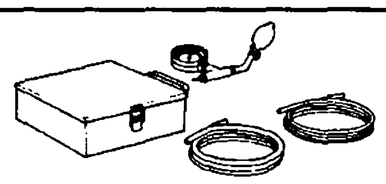	09992-00241	Turbocharger Pressure Gauge		●	●					

SSM (SPECIAL SERVICE MATERIALS)

Part Name	Part No.	Sec.	Use etc.
Seal packing or equivalent	08826-00080	EM	Harf circular plug Camshaft oil seal retainer Cylinder head cover Main bearing cap Rear oil seal retainer Timing belt cover Timing gear cover
		LU	Oil pump (Timing gear case) Oil Pan
Adhesive 1324, Three bond 1324 or equivalent	08833-00070	LU	Engine drain cock Screw plug (Oil pump)