(Cont. next page)

Power Window (RHD)

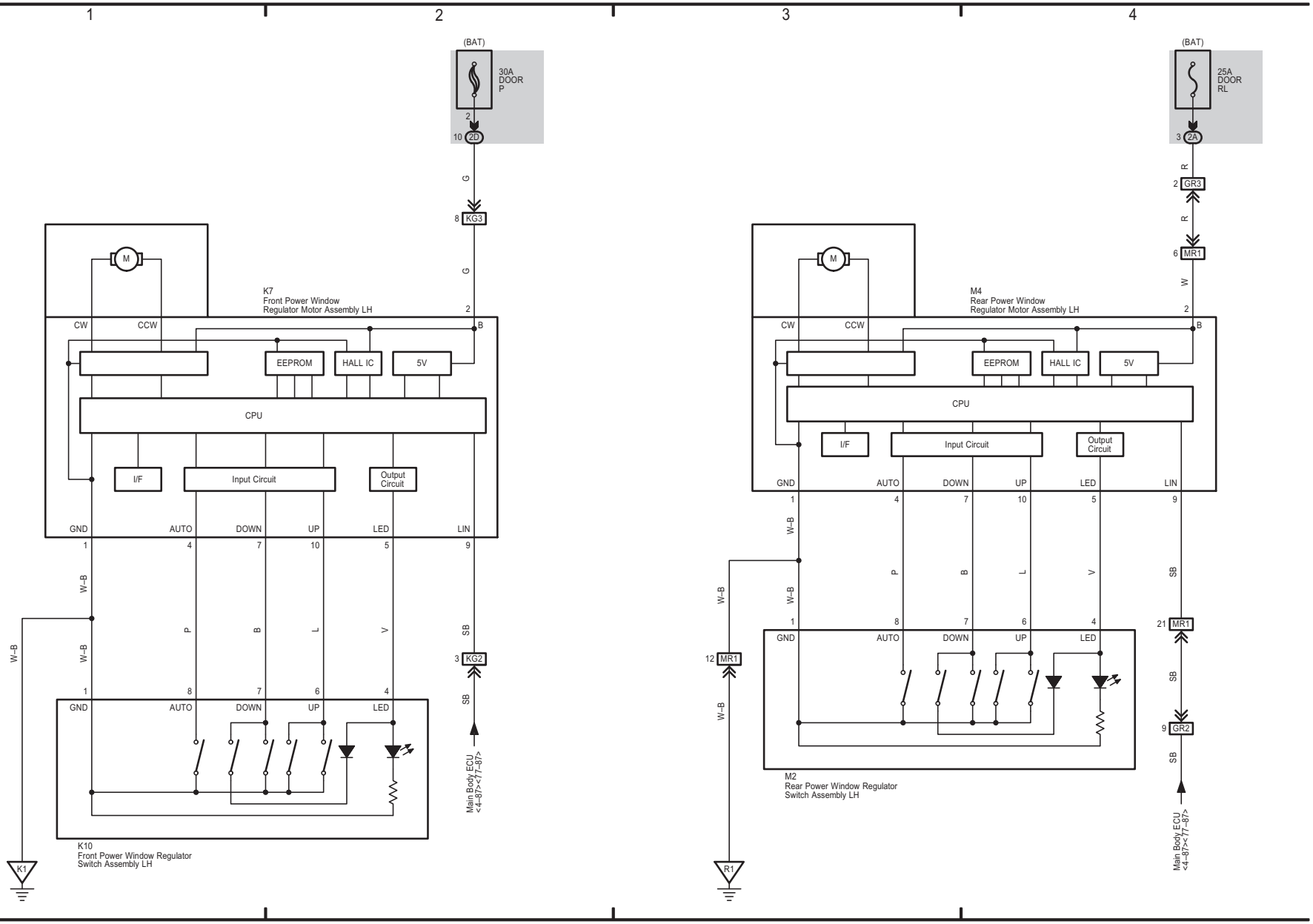
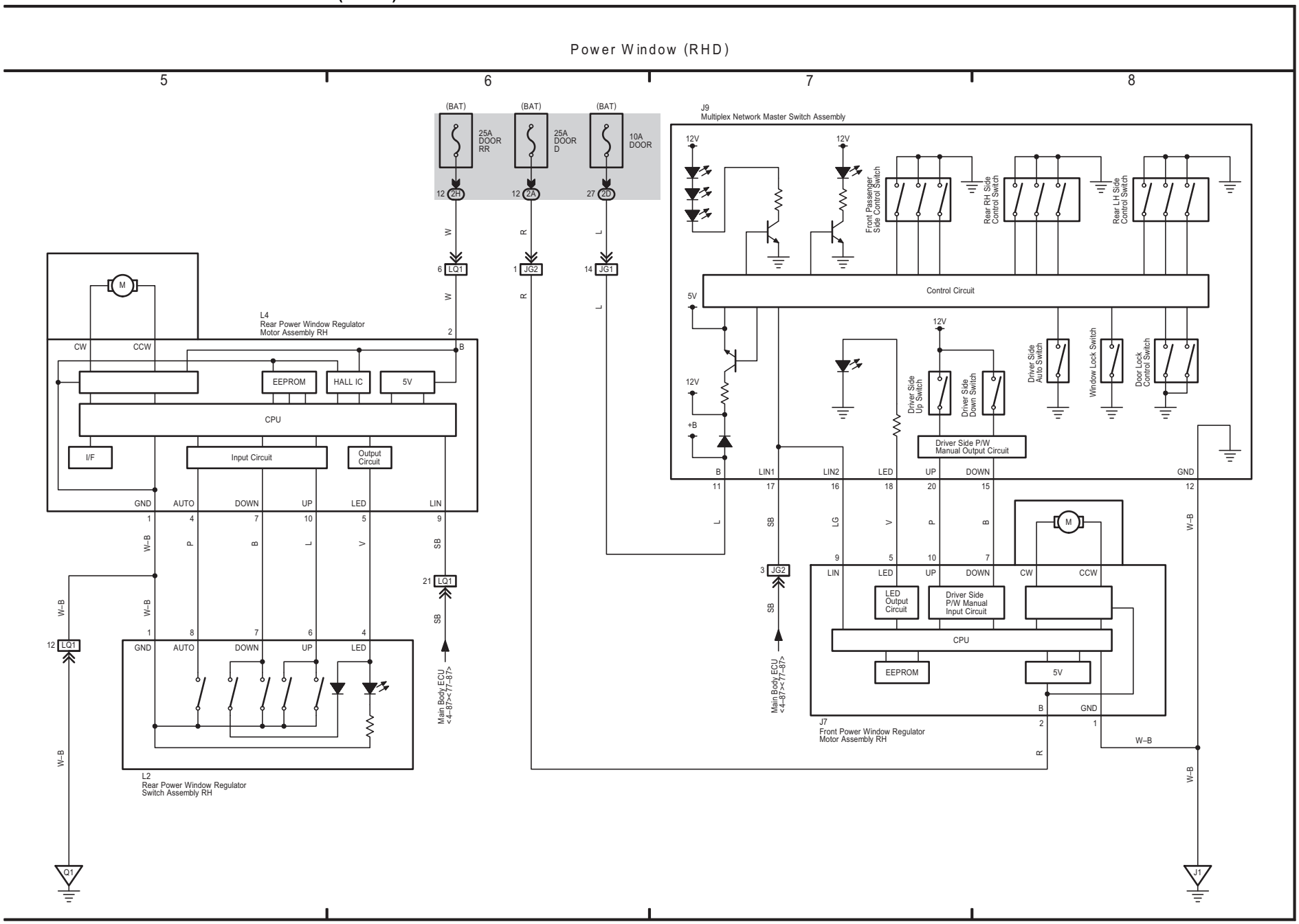
42 LAND CRUISER / LAND CRUISER PRADO (Cont'd)