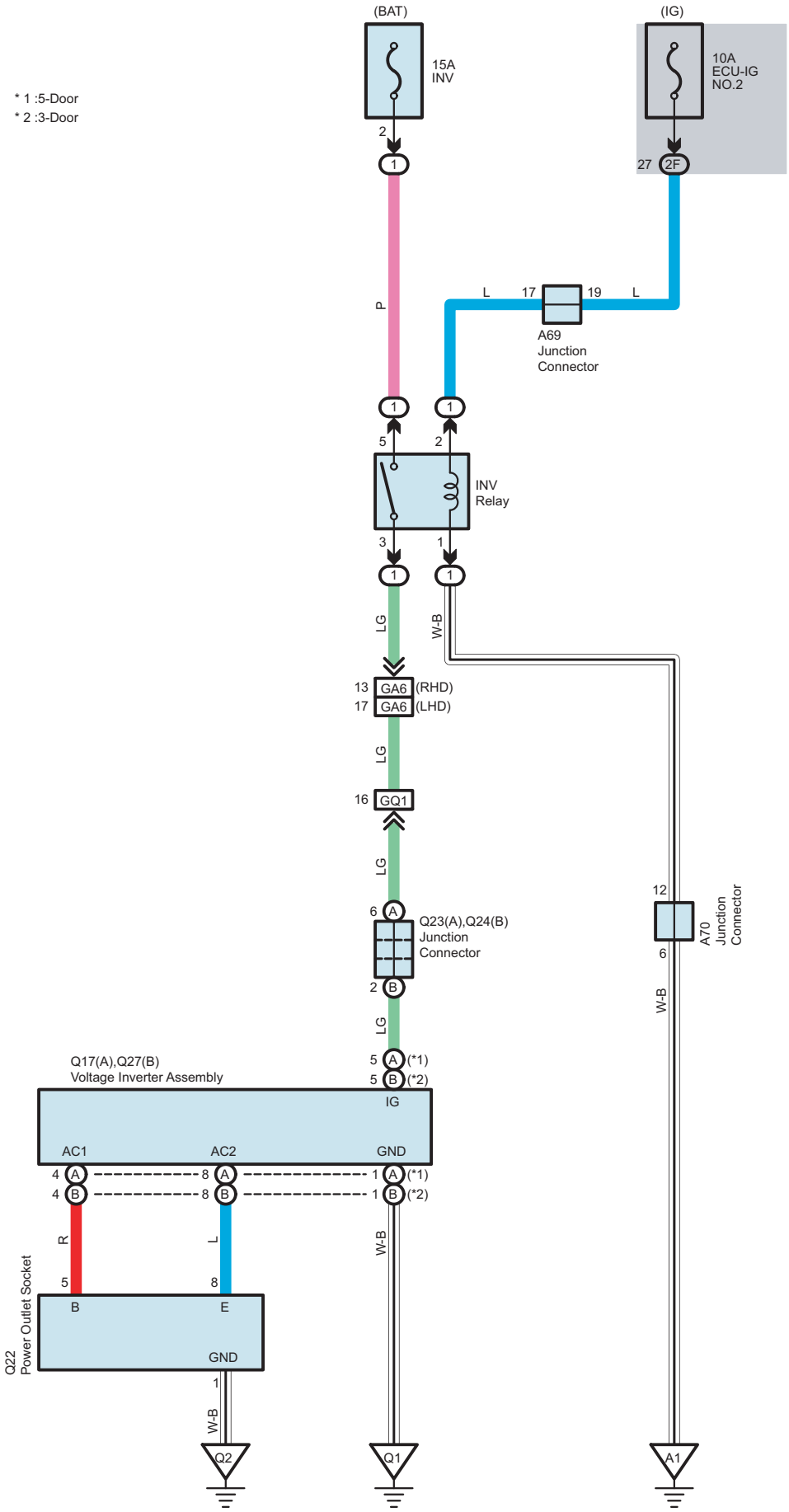
* 1 :5-Door
* 2 :3-Door
(BAT)
15A
INV
(IG)
10A
ECU-IG
NO.2
27
2F
2
1
P
L
17
19
L
A69
Junction
Connector
5
2
INV
Relay
3
1
LG
W-B
13
GA6
(RHD)
17
GA6
(LHD)
LG
16
GQ1
LG
6
A
Q23(A),Q24(B)
Junction
Connector
2
B
LG
12
A70
Junction
Connector
6
W-B
Q17(A),Q27(B)
Voltage Inverter Assembly
5
A
(*1)
5
B
(*2)
IG
AC1
AC2
GND
4
A
8
A
1
A
(*1)
4
B
8
B
1
B
(*2)
R
L
W-B
5
8
B
E
Q22
Power Outlet Socket
GND
1
W-B
Q2
Q1
A1

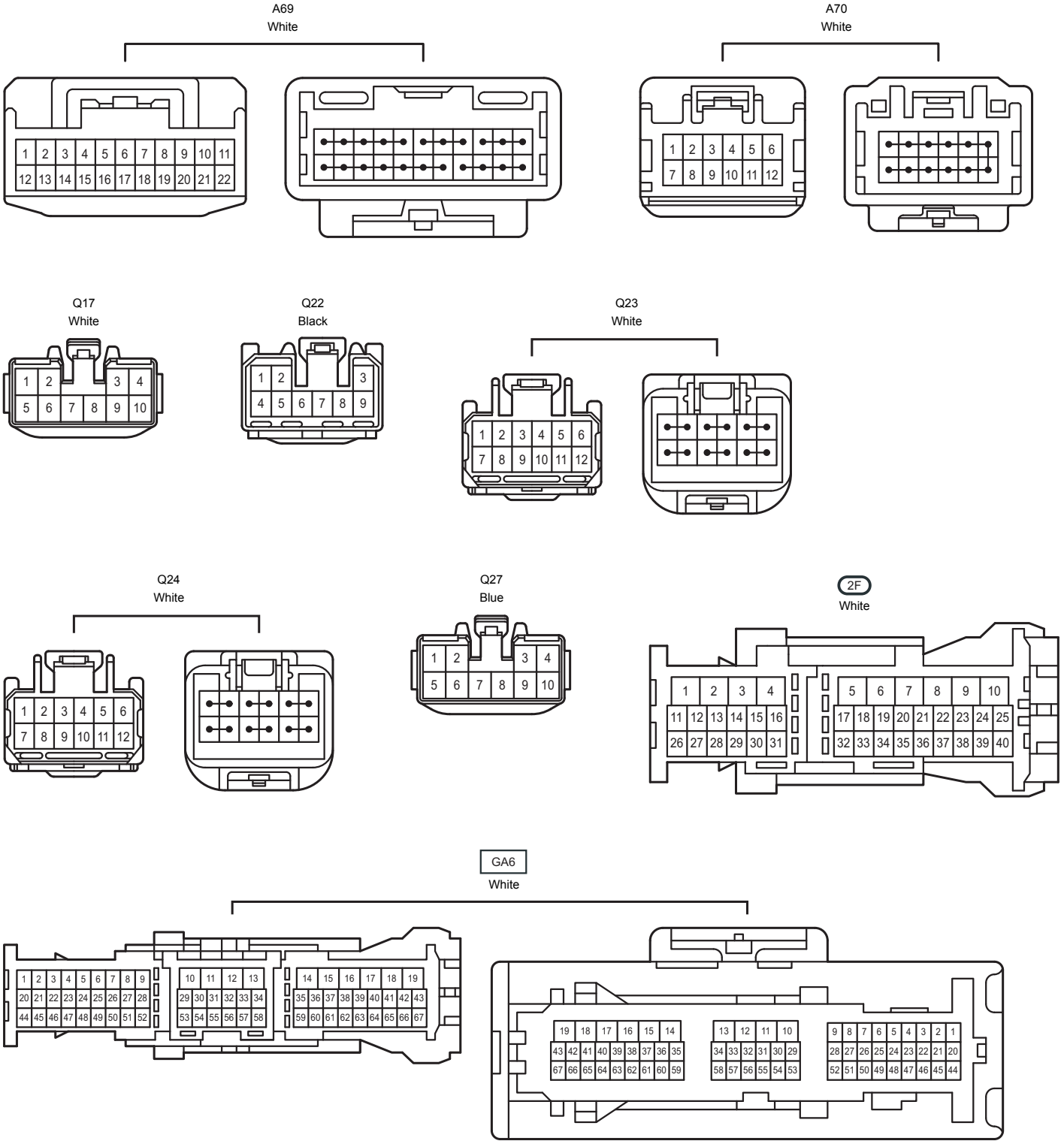
A69
White
A70
White
Q17
White
Q22
Black
Q23
White
Q24
White
Q27
Blue
2F
White
GA6
White

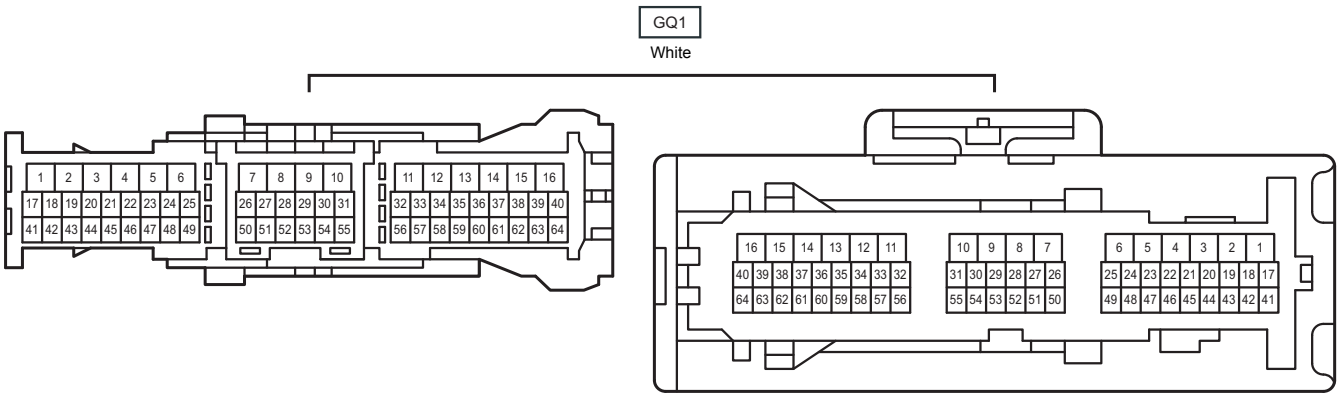
GQ1
White
1 2 3 4 5 6 7 8 9 10 11 12 13 14 15 16
17 18 19 20 21 22 23 24 25 26 27 28 29 30 31 32 33 34 35 36 37 38 39 40
41 42 43 44 45 46 47 48 49 50 51 52 53 54 55 56 57 58 59 60 61 62 63 64
16 15 14 13 12 11 10 9 8 7 6 5 4 3 2 1
40 39 38 37 36 35 34 33 32 31 30 29 28 27 26 25 24 23 22 21 20 19 18 17
64 63 62 61 60 59 58 57 56 55 54 53 52 51 50 49 48 47 46 45 44 43 42 41