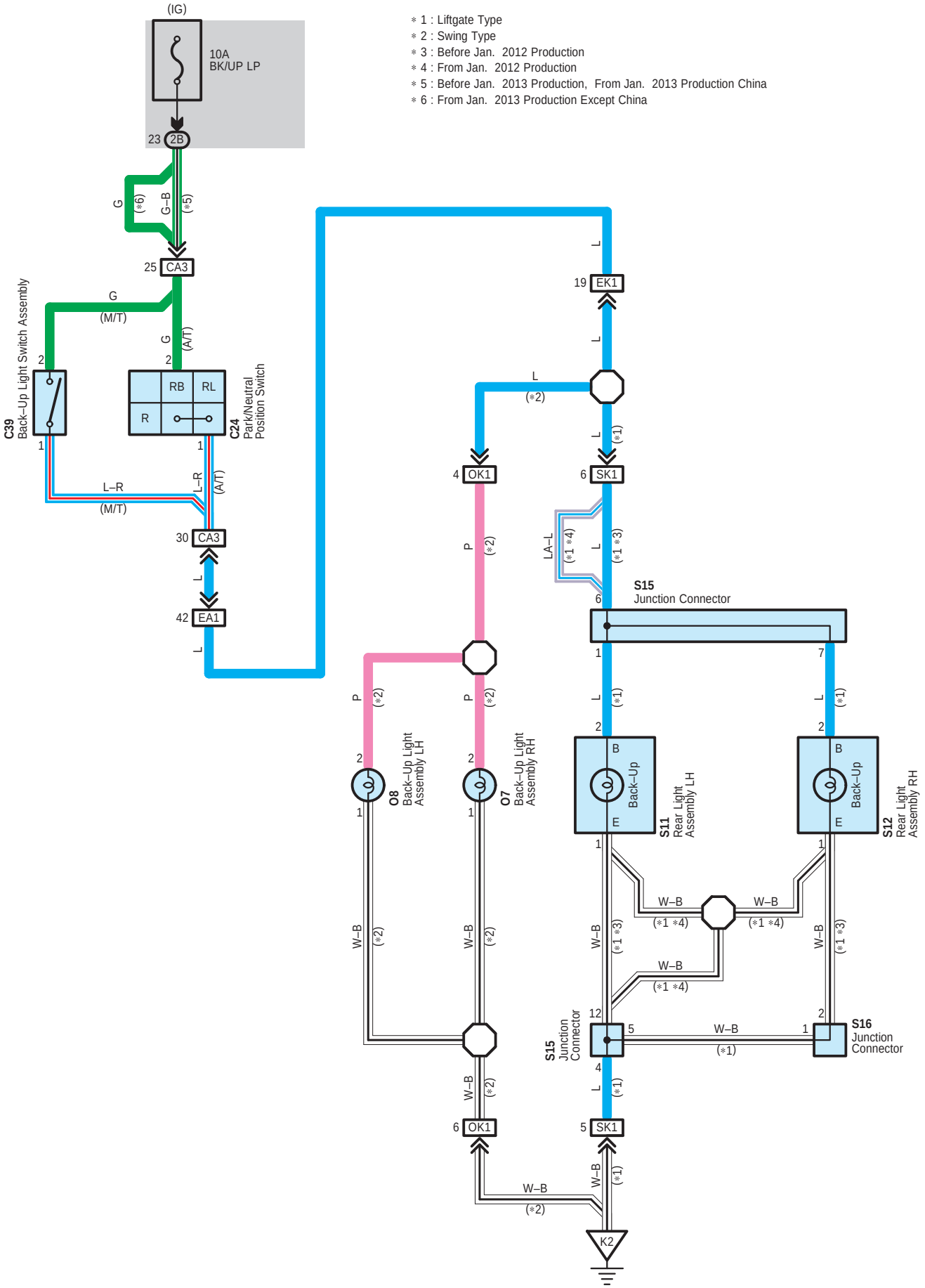

* 1 : Liftgate Type
* 2 : Swing Type
* 3 : Before Jan. 2012 Production
* 4 : From Jan. 2012 Production
* 5 : Before Jan. 2013 Production, From Jan. 2013 Production China
* 6 : From Jan. 2013 Production Except China

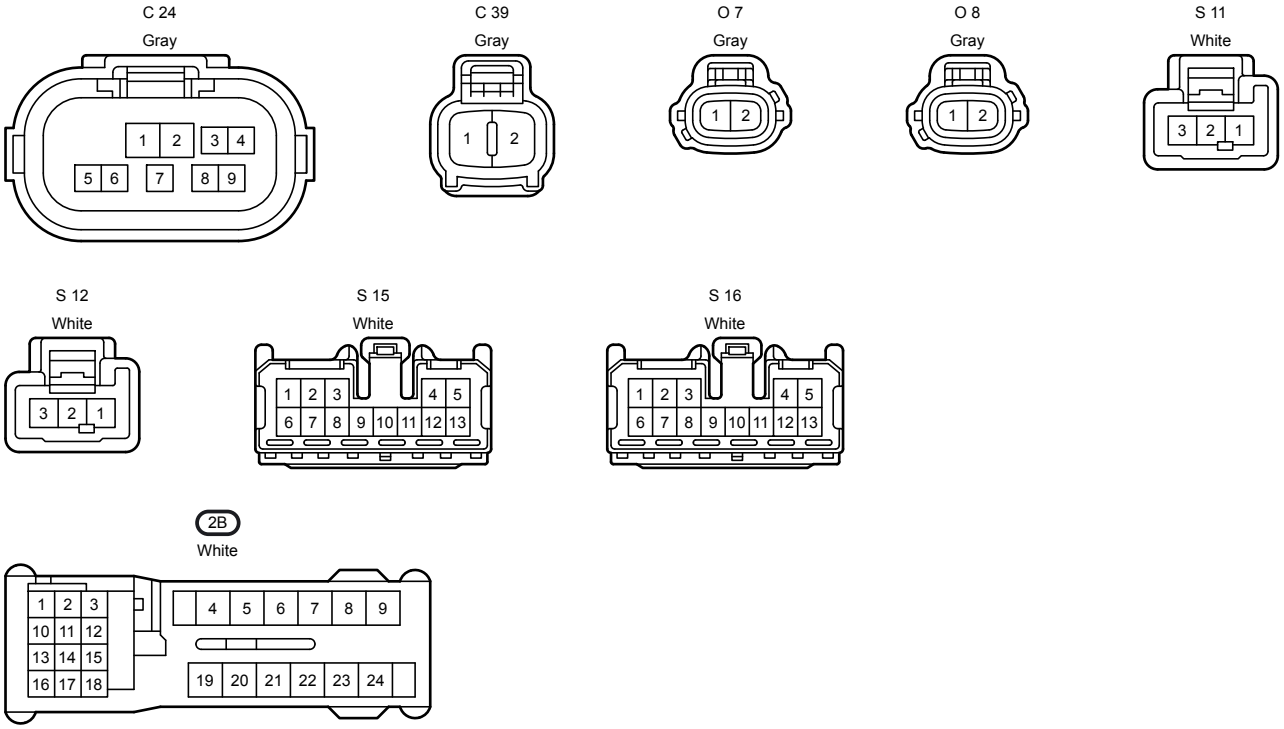
C 24
Gray
C 39
Gray
O 7
Gray
O 8
Gray
S 11
White
S 12
White
S 15
White
S 16
White
2B
White

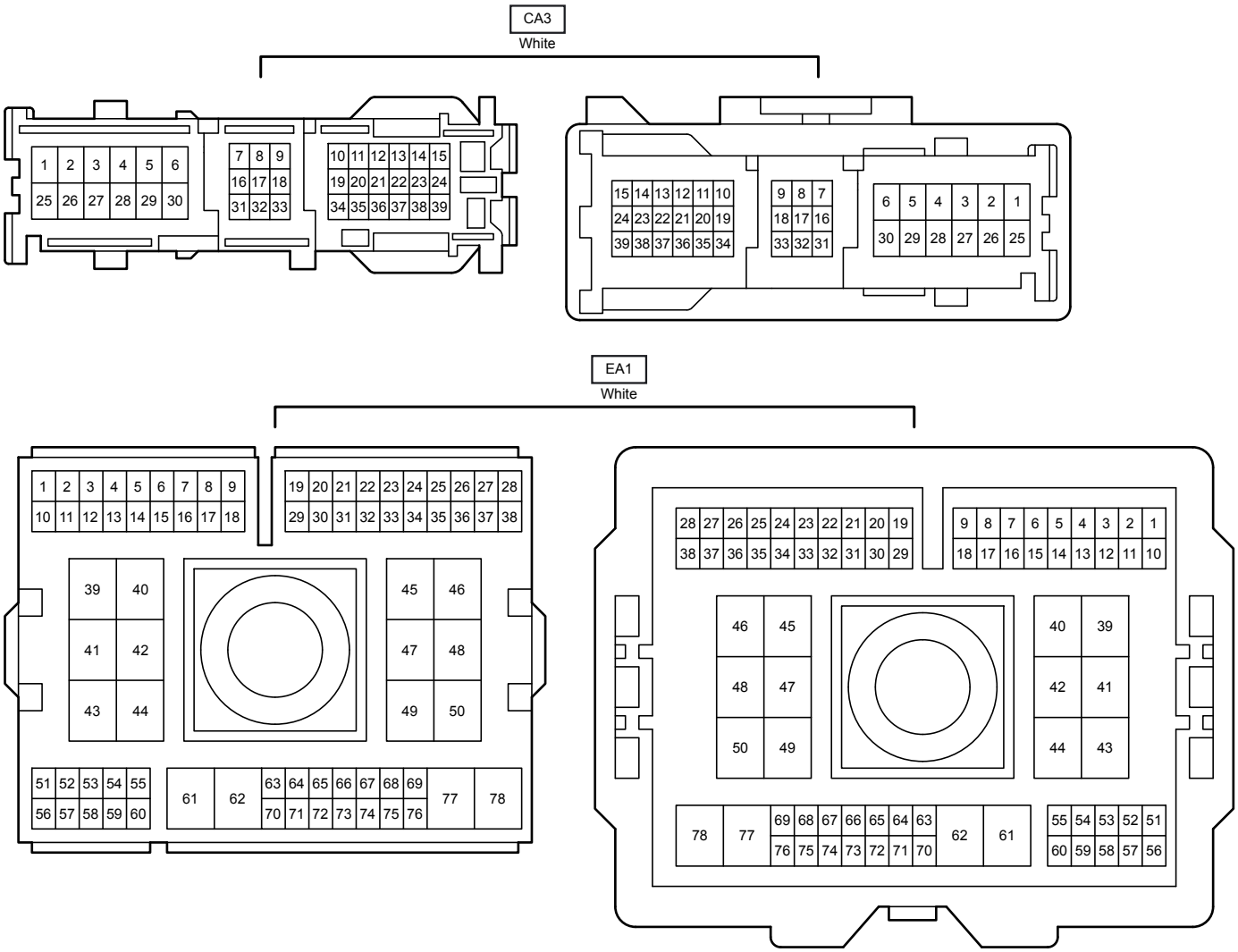
CA3
White
EA1
White

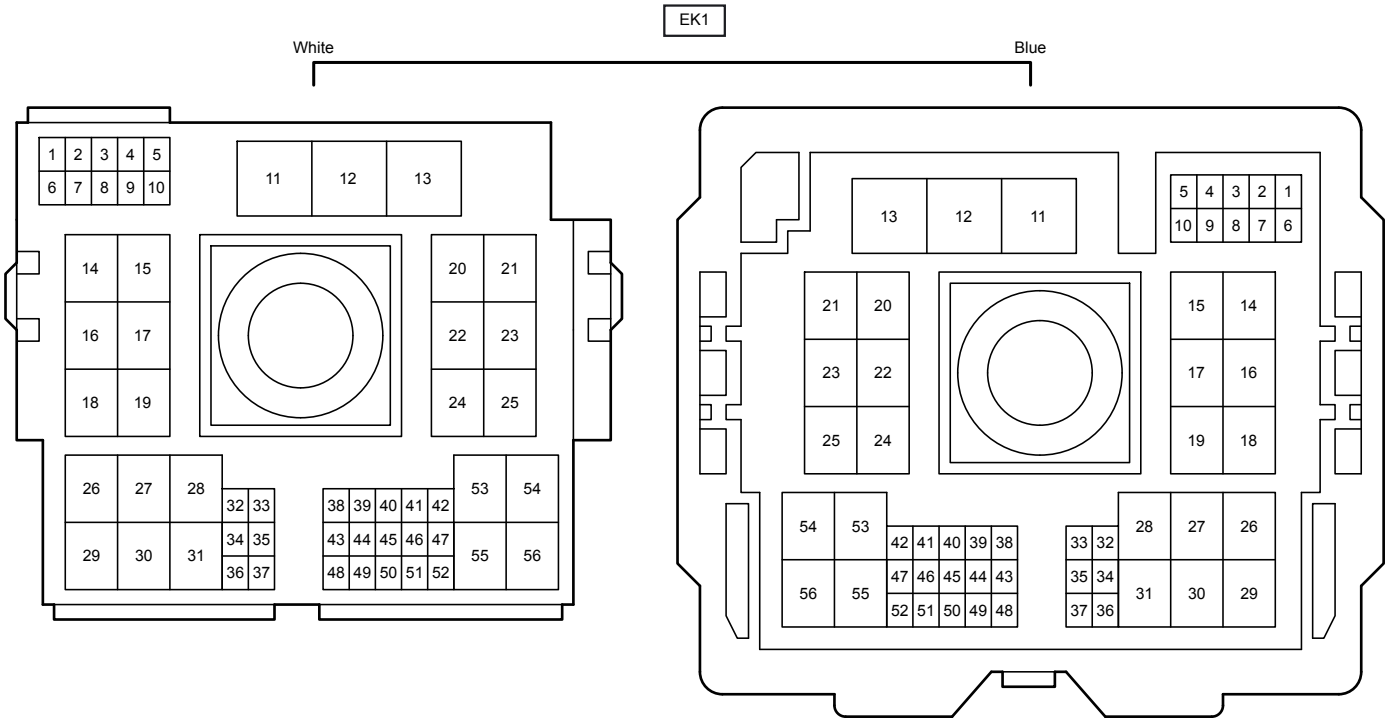
EK1
White
Blue

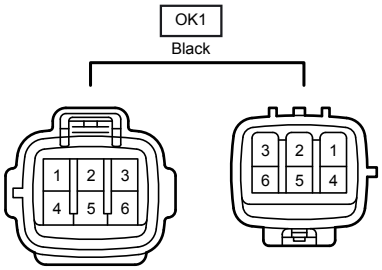
OK1
Black

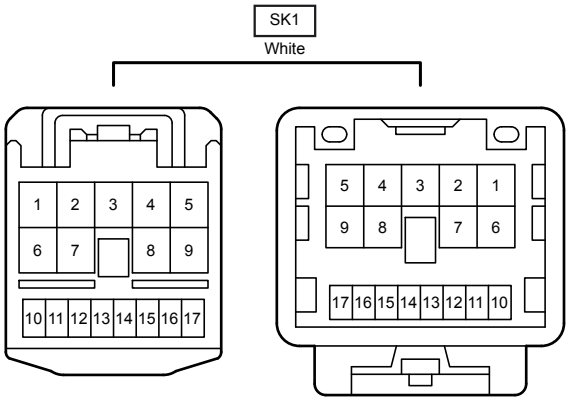
SK1
White