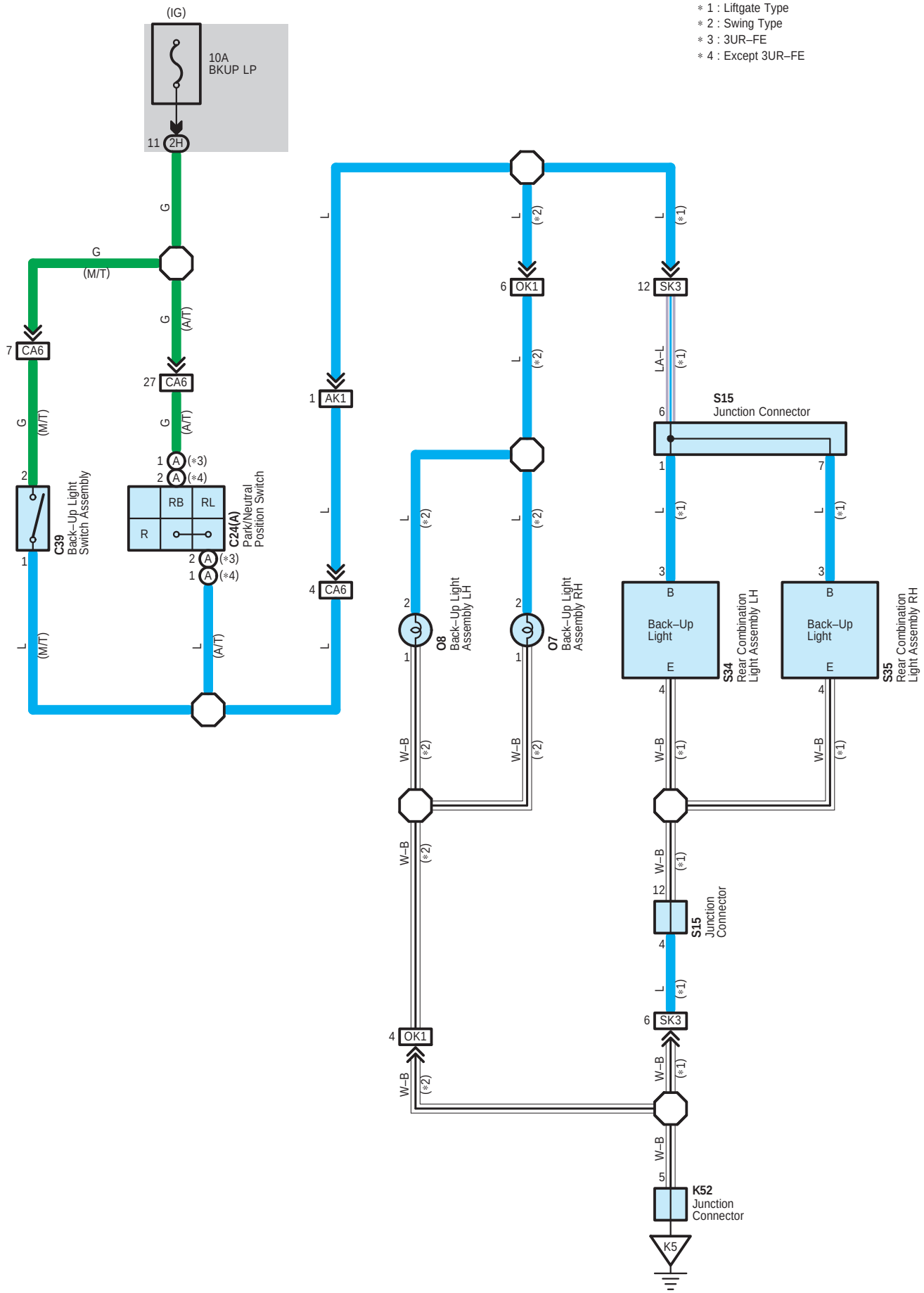
∗1 : Liftgate Type
∗2 : Swing Type
∗3 : 3UR–FE
∗4 : Except 3UR–FE
(IG)
10A
BKUP LP
11 2H
G
G
(M/T)
G
(A/T)
7 CA6
27 CA6
G
(M/T)
G
(A/T)
1 A (∗3)
2 A (∗4)
2
1
C39
Back–Up Light
Switch Assembly
RB
RL
R
C24(A)
Park/Neutral
Position Switch
2 A (∗3)
1 A (∗4)
L
(M/T)
L
(A/T)
L
1 AK1
4 CA6
L
L
(∗2)
6 OK1
L
(∗2)
L
(∗1)
12 SK3
LA–L
(∗1)
S15
Junction Connector
6
1
7
L
(∗1)
L
(∗1)
L
(∗2)
L
(∗2)
2
1
O8
Back–Up Light
Assembly LH
2
1
O7
Back–Up Light
Assembly RH
3
B
Back–Up
Light
E
S34
Rear Combination
Light Assembly LH
3
B
Back–Up
Light
E
S35
Rear Combination
Light Assembly RH
4
4
W–B
(∗2)
W–B
(∗2)
W–B
(∗1)
W–B
(∗1)
W–B
(∗2)
W–B
(∗1)
12
S15
Junction
Connector
4
L
(∗1)
4 OK1
W–B
(∗2)
6 SK3
W–B
(∗1)
W–B
5
K52
Junction
Connector
K5

C 24
Gray

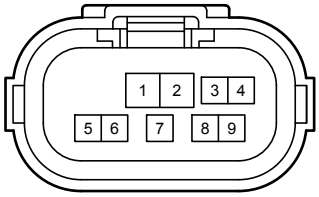

C 39
Gray

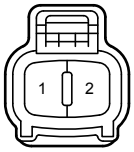

K 52
Black

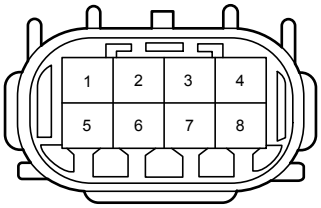

O 7
Gray

O 8
Gray

S 15
White

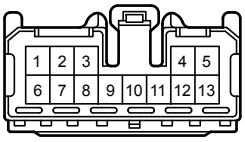

S 34
White

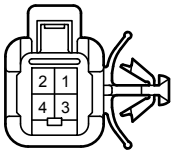

S 35
White

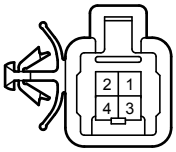

2H
White

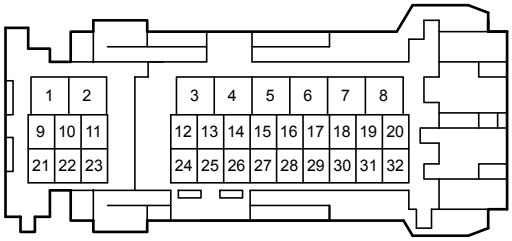

AK1
Blue

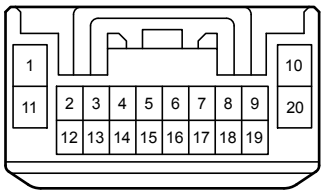

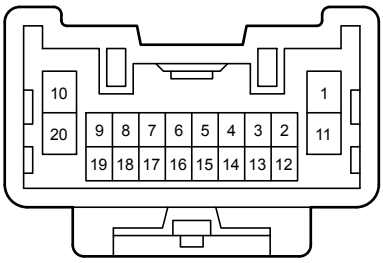

CA6
White

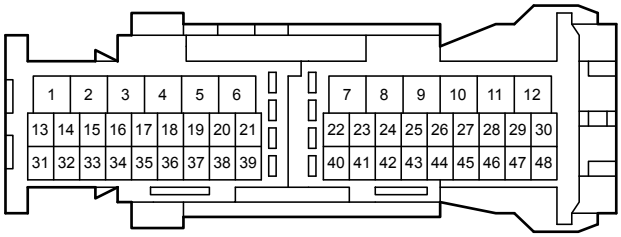

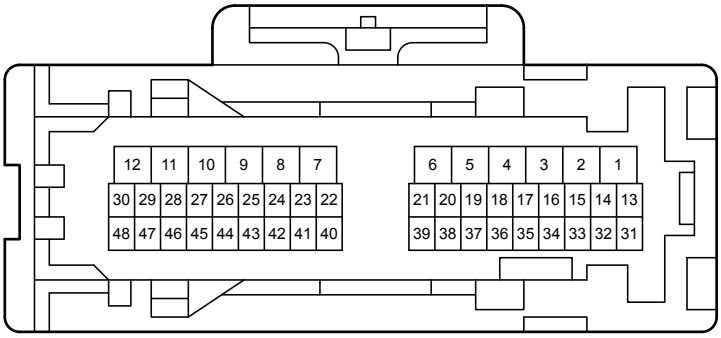

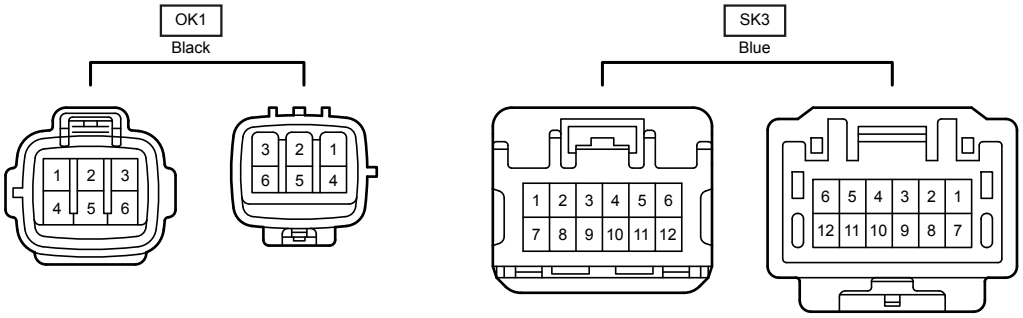
OK1
Black
1 2 3
4 5 6
3 2 1
6 5 4
SK3
Blue
1 2 3 4 5 6
7 8 9 10 11 12
6 5 4 3 2 1
12 11 10 9 8 7