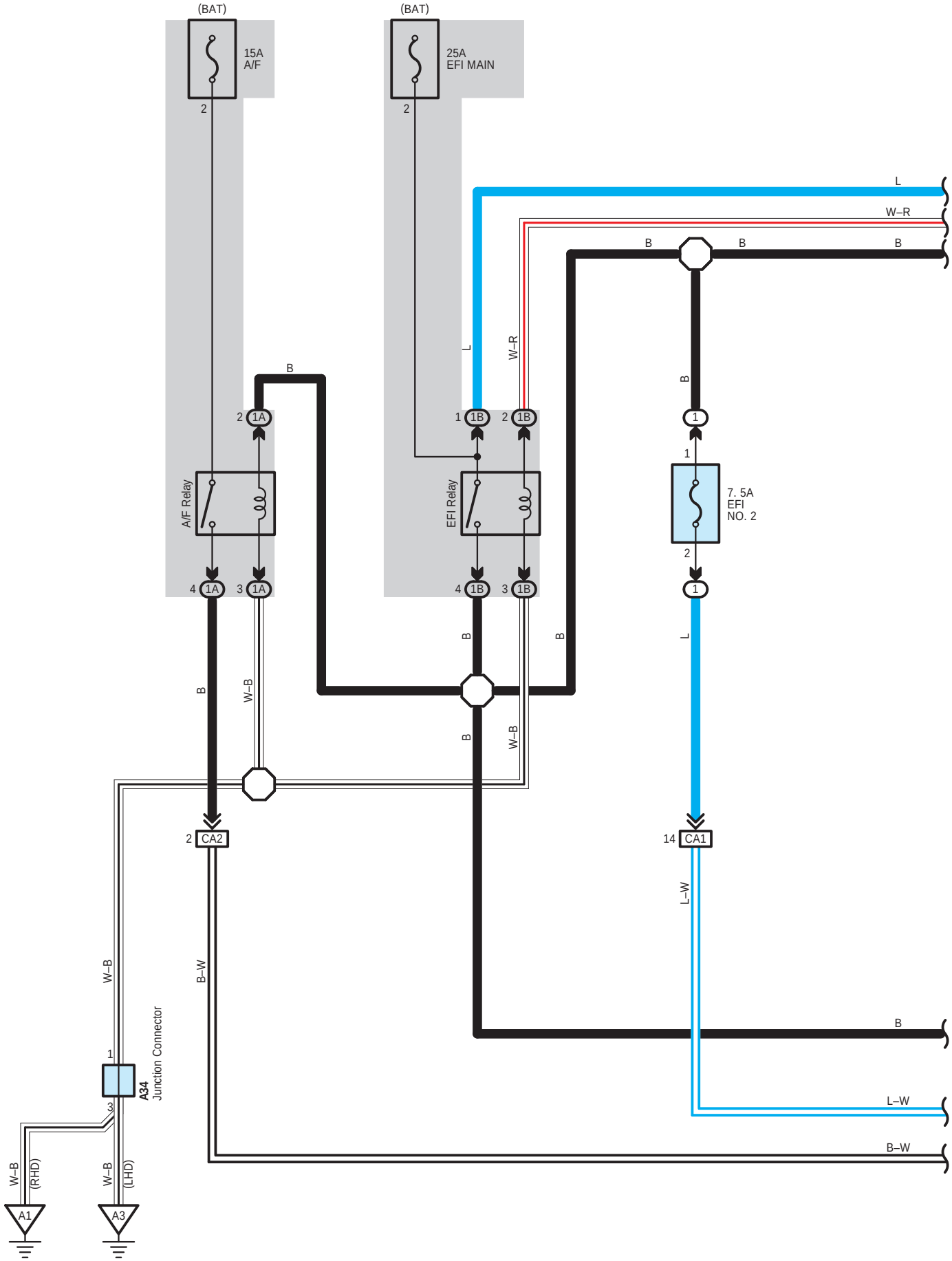
(BAT)
15A
A/F
(BAT)
25A
EFI MAIN
A/F Relay
EFI Relay
7. 5A
EFI
NO. 2
CA2
CA1
A34
Junction Connector
A1
A3
(RHD)
(LHD)
L
W–R
B
W–B
B–W
L–W

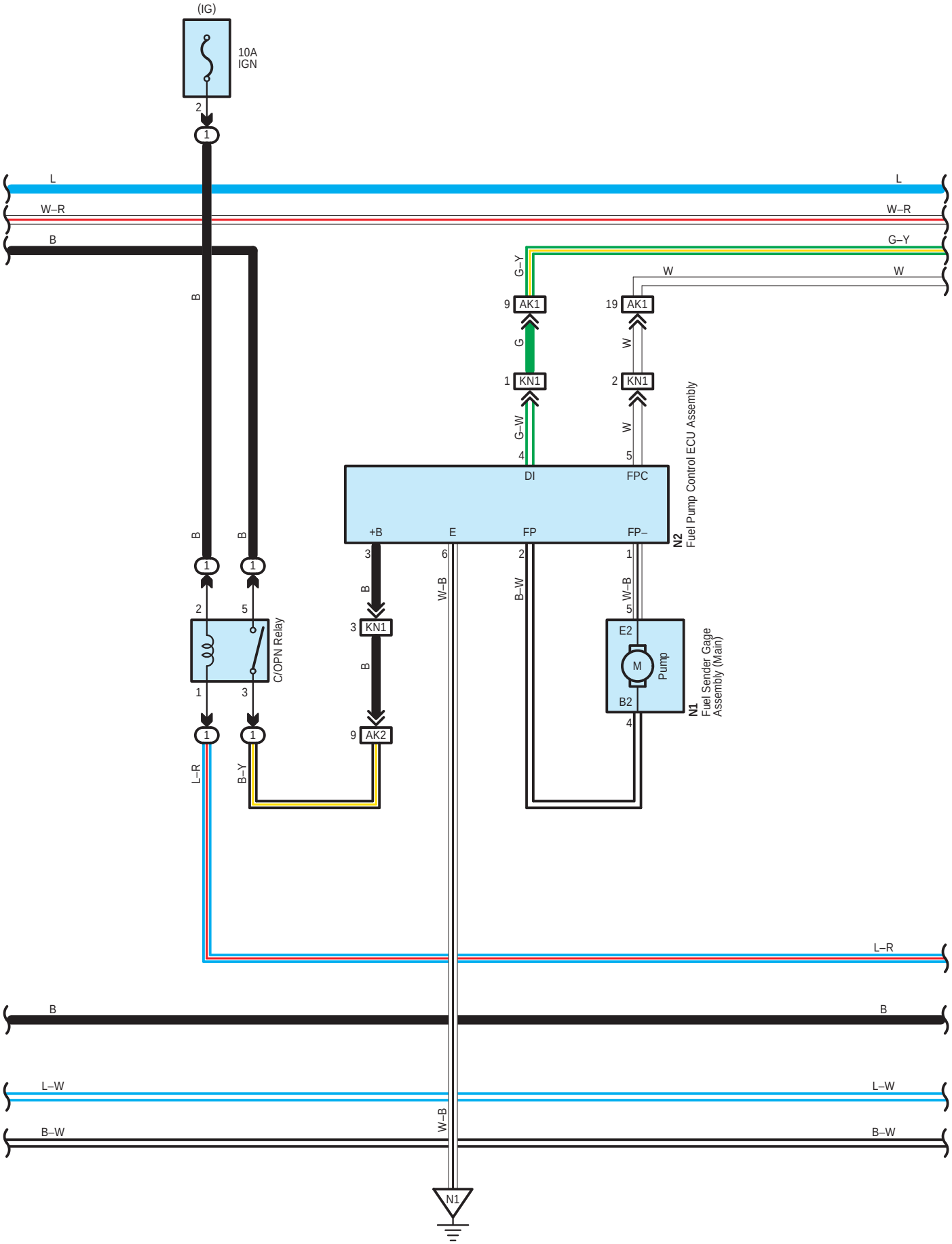
(IG)
10A
IGN
L
W–R
B
G–Y
W
AK1
KN1
G
G–W
DI
FPC
+B
E
FP
FP–
N2
Fuel Pump Control ECU Assembly
W–B
B–W
C/OPN Relay
AK2
E2
M
Pump
B2
N1
Fuel Sender Gage Assembly (Main)
L–R
B–Y
L–W
B–W
N1

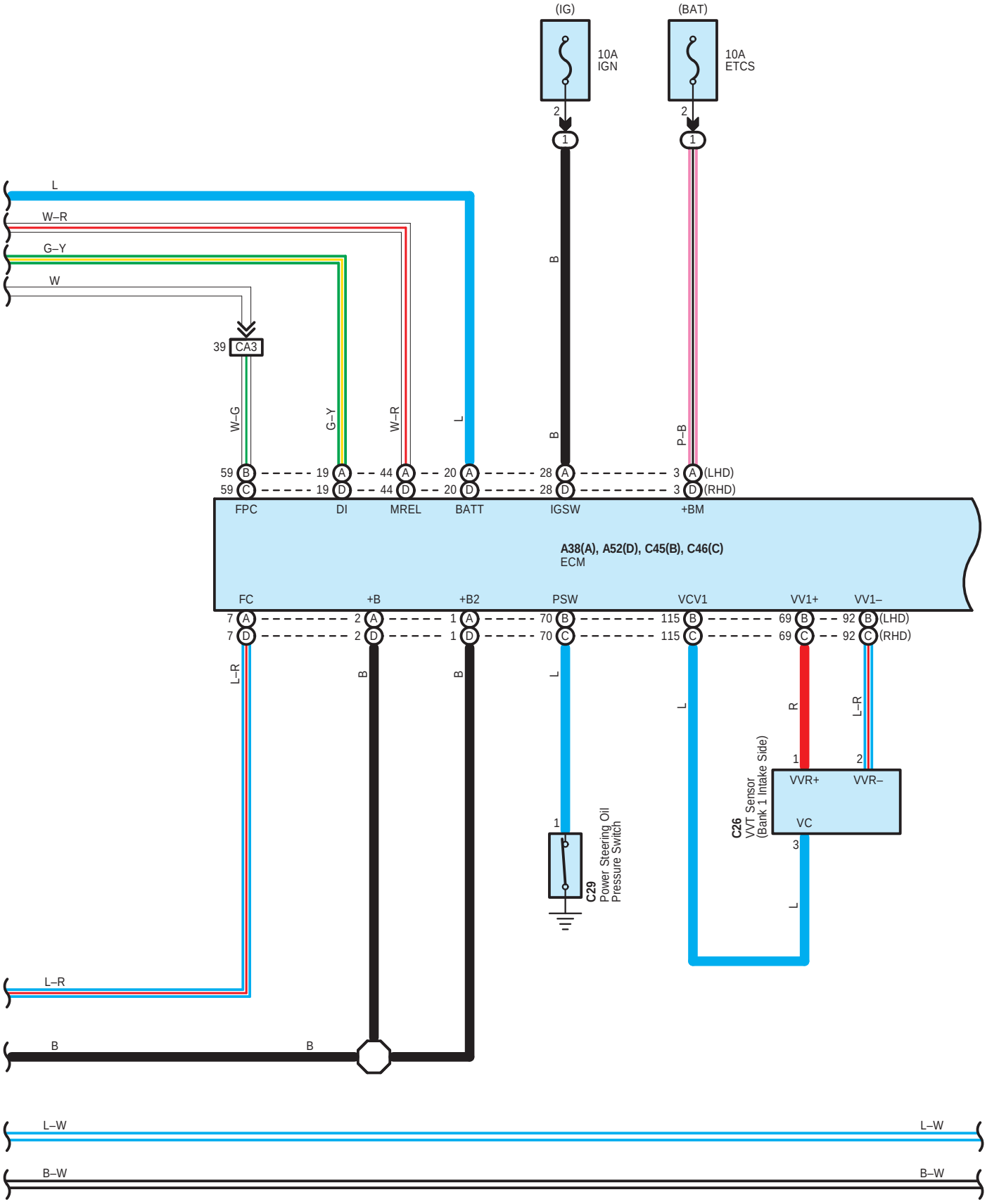
(IG)
10A
IGN
(BAT)
10A
ETCS
L
W–R
G–Y
W
39 CA3
W–G
G–Y
W–R
L
B
B
P–B
59 B
59 C
19 A
19 D
44 A
44 D
20 A
20 D
28 A
28 D
3 A (LHD)
3 D (RHD)
FPC
DI
MREL
BATT
IGSW
+BM
A38(A), A52(D), C45(B), C46(C)
ECM
FC
+B
+B2
PSW
VCV1
VV1+
VV1–
7 A
7 D
2 A
2 D
1 A
1 D
70 B
70 C
115 B
115 C
69 B
69 C
92 B (LHD)
92 C (RHD)
L–R
B
B
L
L
R
L–R
C26
VVT Sensor
(Bank 1 Intake Side)
VVR+
VVR–
VC
C29
Power Steering Oil
Pressure Switch
L–R
B
B
L–W
L–W
B–W
B–W

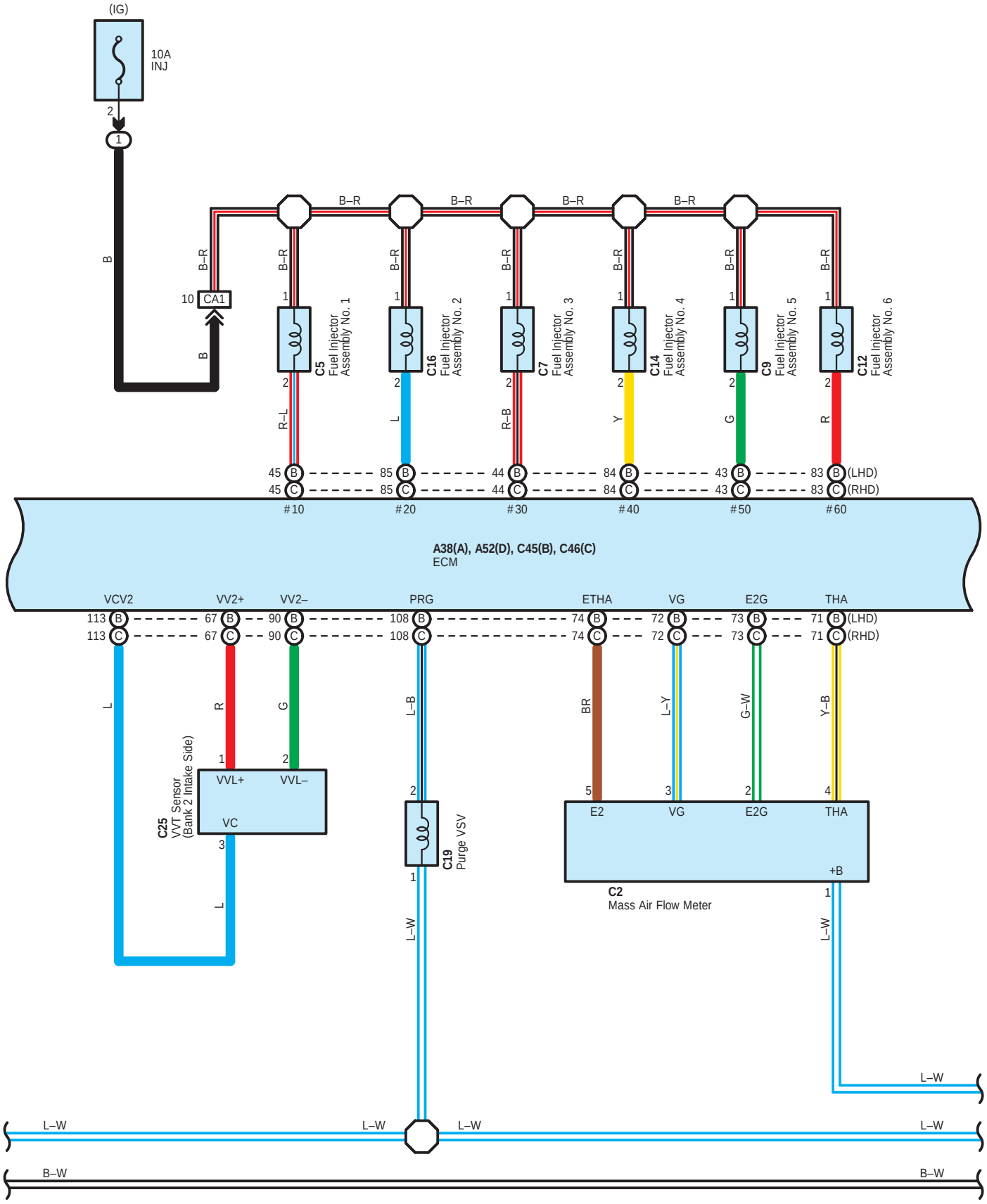
(IG)
10A
INJ
CA1
C5 Fuel Injector Assembly No. 1
C16 Fuel Injector Assembly No. 2
C7 Fuel Injector Assembly No. 3
C14 Fuel Injector Assembly No. 4
C9 Fuel Injector Assembly No. 5
C12 Fuel Injector Assembly No. 6
#10
#20
#30
#40
#50
#60
(LHD)
(RHD)
A38(A), A52(D), C45(B), C46(C)
ECM
VCV2
VV2+
VV2–
PRG
ETHA
VG
E2G
THA
C25 VVT Sensor (Bank 2 Intake Side)
VVL+
VVL–
VC
C19 Purge VSV
E2
+B
C2
Mass Air Flow Meter
B–R
B
R–L
L
R–B
Y
G
R
L–B
BR
L–Y
G–W
Y–B
L–W
B–W

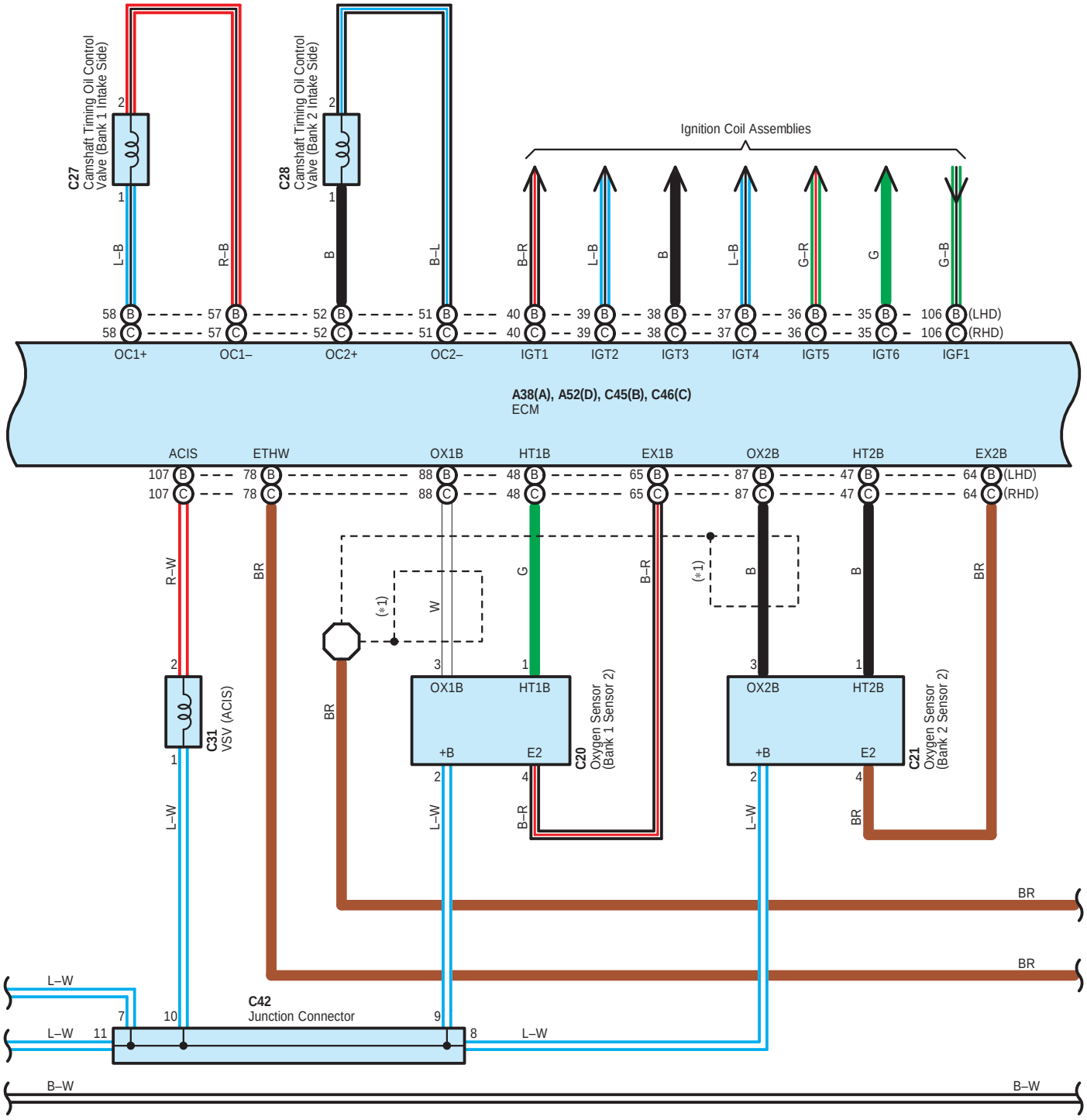
C27
Camshaft Timing Oil Control Valve (Bank 1 Intake Side)
C28
Camshaft Timing Oil Control Valve (Bank 2 Intake Side)
Ignition Coil Assemblies
L–B
R–B
B
B–L
B–R
L–B
B
L–B
G–R
G
G–B
58 B
58 C
57 B
57 C
52 B
52 C
51 B
51 C
40 B
40 C
39 B
39 C
38 B
38 C
37 B
37 C
36 B
36 C
35 B
35 C
106 B (LHD)
106 C (RHD)
OC1+
OC1–
OC2+
OC2–
IGT1
IGT2
IGT3
IGT4
IGT5
IGT6
IGF1
A38(A), A52(D), C45(B), C46(C)
ECM
ACIS
ETHW
OX1B
HT1B
EX1B
OX2B
HT2B
EX2B
107 B
107 C
78 B
78 C
88 B
88 C
48 B
48 C
65 B
65 C
87 B
87 C
47 B
47 C
64 B (LHD)
64 C (RHD)
R–W
BR
(*1)
W
G
B–R
(*1)
B
B
BR
C31
VSV (ACIS)
OX1B
HT1B
+B
E2
C20
Oxygen Sensor (Bank 1 Sensor 2)
OX2B
HT2B
+B
E2
C21
Oxygen Sensor (Bank 2 Sensor 2)
L–W
L–W
B–R
L–W
BR
BR
BR
BR
L–W
L–W
C42
Junction Connector
L–W
B–W
B–W

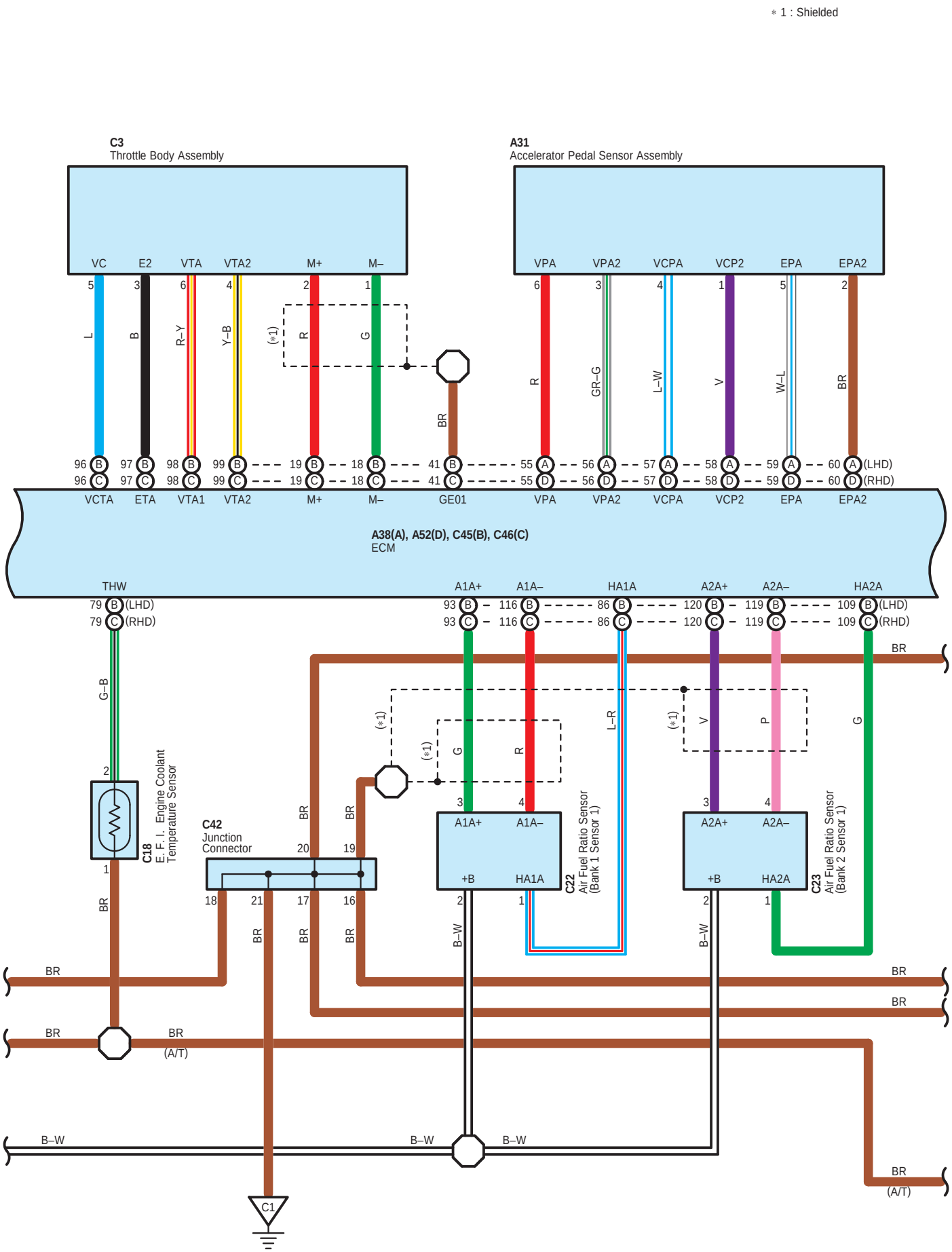
∗1 : Shielded
C3
Throttle Body Assembly
A31
Accelerator Pedal Sensor Assembly
VC
E2
VTA
VTA2
M+
M–
VPA
VPA2
VCPA
VCP2
EPA
EPA2
VCTA
ETA
VTA1
GE01
(LHD)
(RHD)
A38(A), A52(D), C45(B), C46(C)
ECM
THW
A1A+
A1A–
HA1A
A2A+
A2A–
HA2A
C18
E. F. I. Engine Coolant Temperature Sensor
C42
Junction Connector
C22
Air Fuel Ratio Sensor (Bank 1 Sensor 1)
C23
Air Fuel Ratio Sensor (Bank 2 Sensor 1)
+B
(A/T)
C1

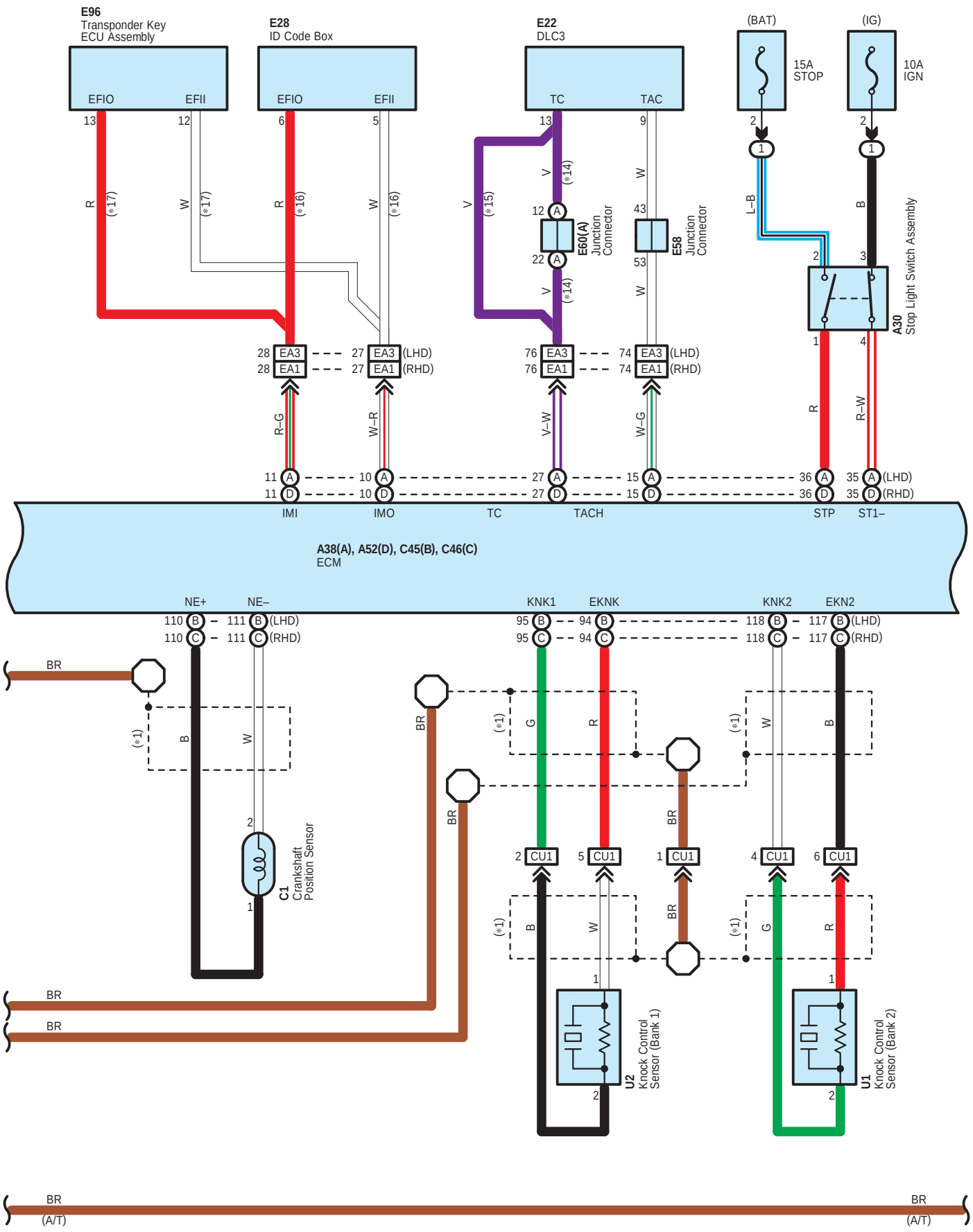
E96
Transponder Key ECU Assembly
E28
ID Code Box
E22
DLC3
(BAT)
(IG)
15A STOP
10A IGN
EFIO
EFII
TC
TAC
E60(A) Junction Connector
E58 Junction Connector
A30 Stop Light Switch Assembly
EA3
EA1
(LHD)
(RHD)
IMI
IMO
TACH
STP
ST1–
A38(A), A52(D), C45(B), C46(C)
ECM
NE+
NE–
KNK1
EKNK
KNK2
EKN2
C1 Crankshaft Position Sensor
CU1
U2 Knock Control Sensor (Bank 1)
U1 Knock Control Sensor (Bank 2)
BR
(A/T)

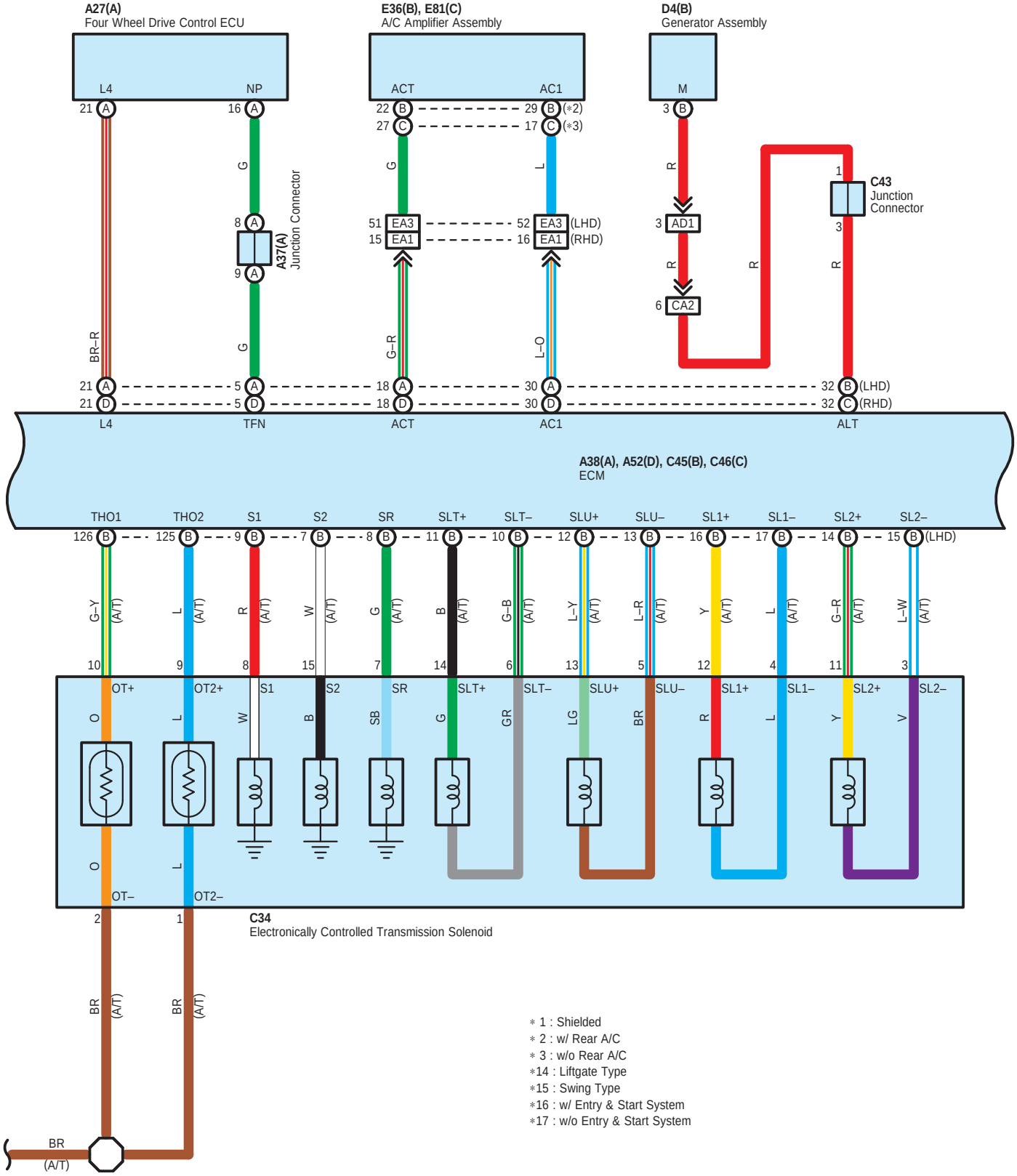

∗ 1 : Shielded
∗ 2 : w/ Rear A/C
∗ 3 : w/o Rear A/C
∗14 : Liftgate Type
∗15 : Swing Type
∗16 : w/ Entry & Start System
∗17 : w/o Entry & Start System

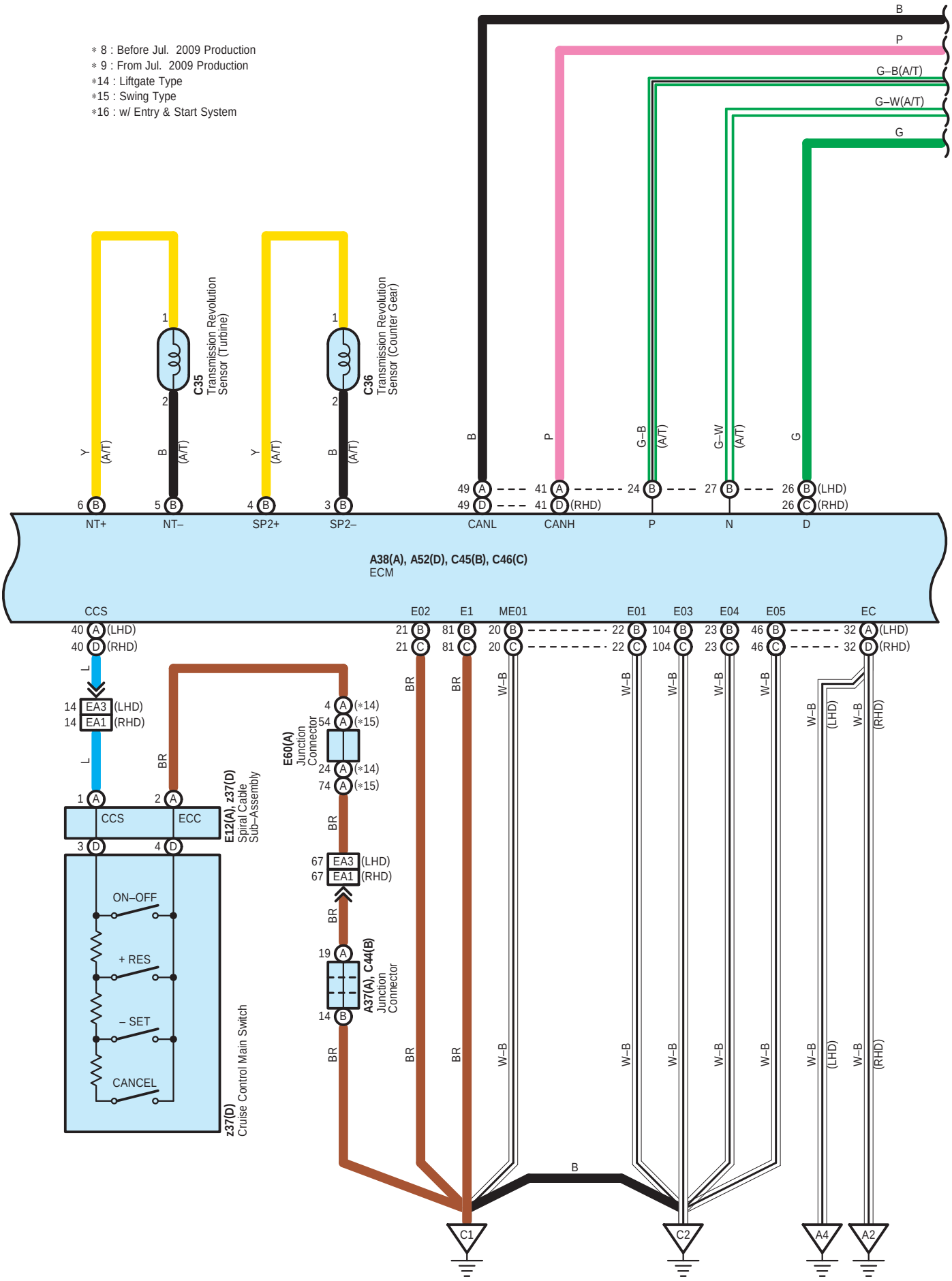
∗ 8 : Before Jul. 2009 Production
∗ 9 : From Jul. 2009 Production
∗14 : Liftgate Type
∗15 : Swing Type
∗16 : w/ Entry & Start System
C35 Transmission Revolution Sensor (Turbine)
C36 Transmission Revolution Sensor (Counter Gear)
NT+
NT–
SP2+
SP2–
CANL
CANH
P
N
D
A38(A), A52(D), C45(B), C46(C) ECM
CCS
E02
E1
ME01
E01
E03
E04
E05
EC
E12(A), z37(D) Spiral Cable Sub–Assembly
E60(A) Junction Connector
A37(A), C44(B) Junction Connector
z37(D) Cruise Control Main Switch
ON–OFF
+ RES
– SET
CANCEL
C1
C2
A4
A2

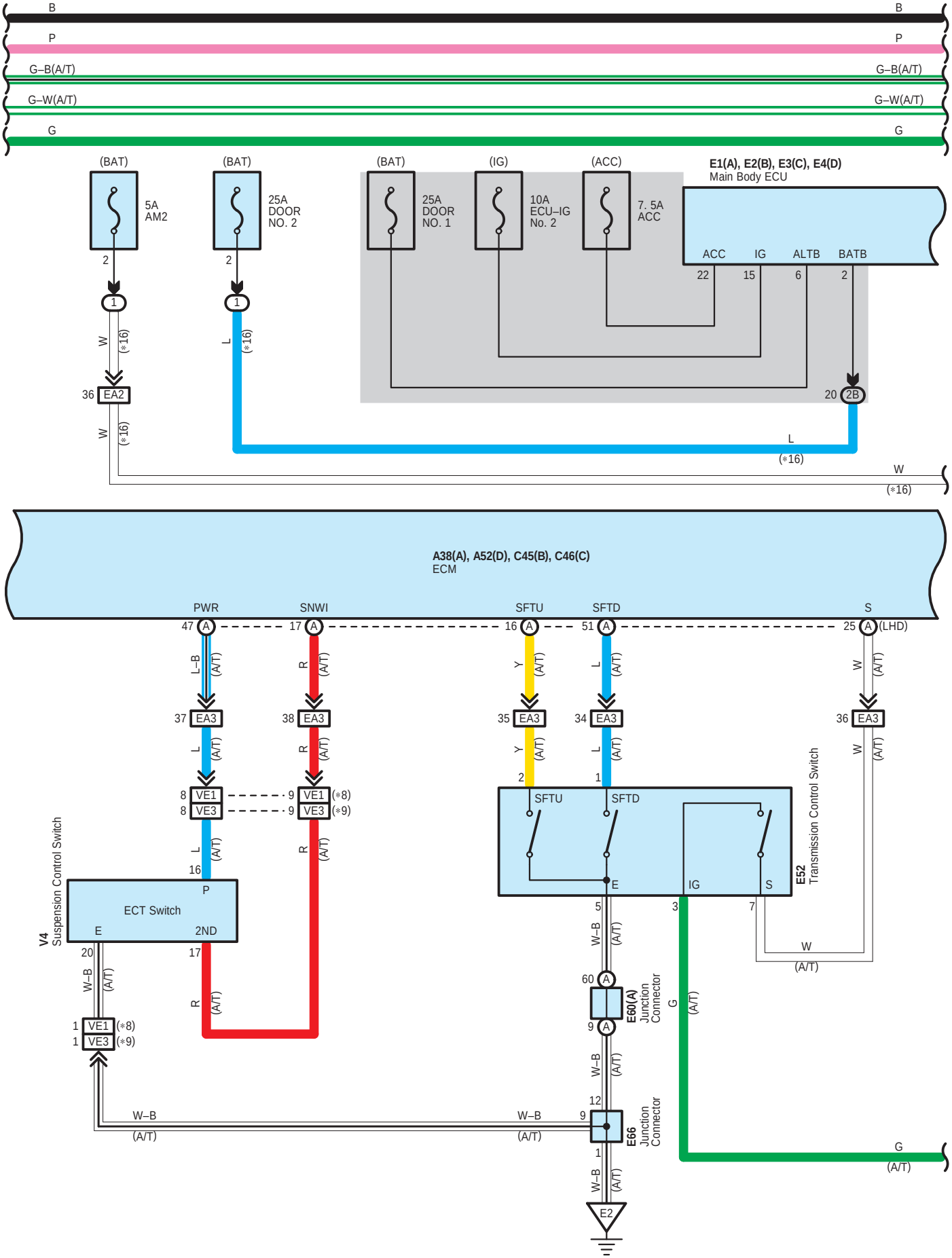
B
P
G–B(A/T)
G–W(A/T)
G
(BAT)
5A
AM2
25A
DOOR
NO. 2
(IG)
10A
ECU–IG
No. 2
(ACC)
7. 5A
ACC
E1(A), E2(B), E3(C), E4(D)
Main Body ECU
ACC
IG
ALTB
BATB
EA2
2B
(*16)
A38(A), A52(D), C45(B), C46(C)
ECM
PWR
SNWI
SFTU
SFTD
S
(LHD)
EA3
VE1
VE3
(*8)
(*9)
ECT Switch
2ND
V4
Suspension Control Switch
E52
Transmission Control Switch
E60(A)
Junction
Connector
E66
Junction
Connector
E2
(A/T)

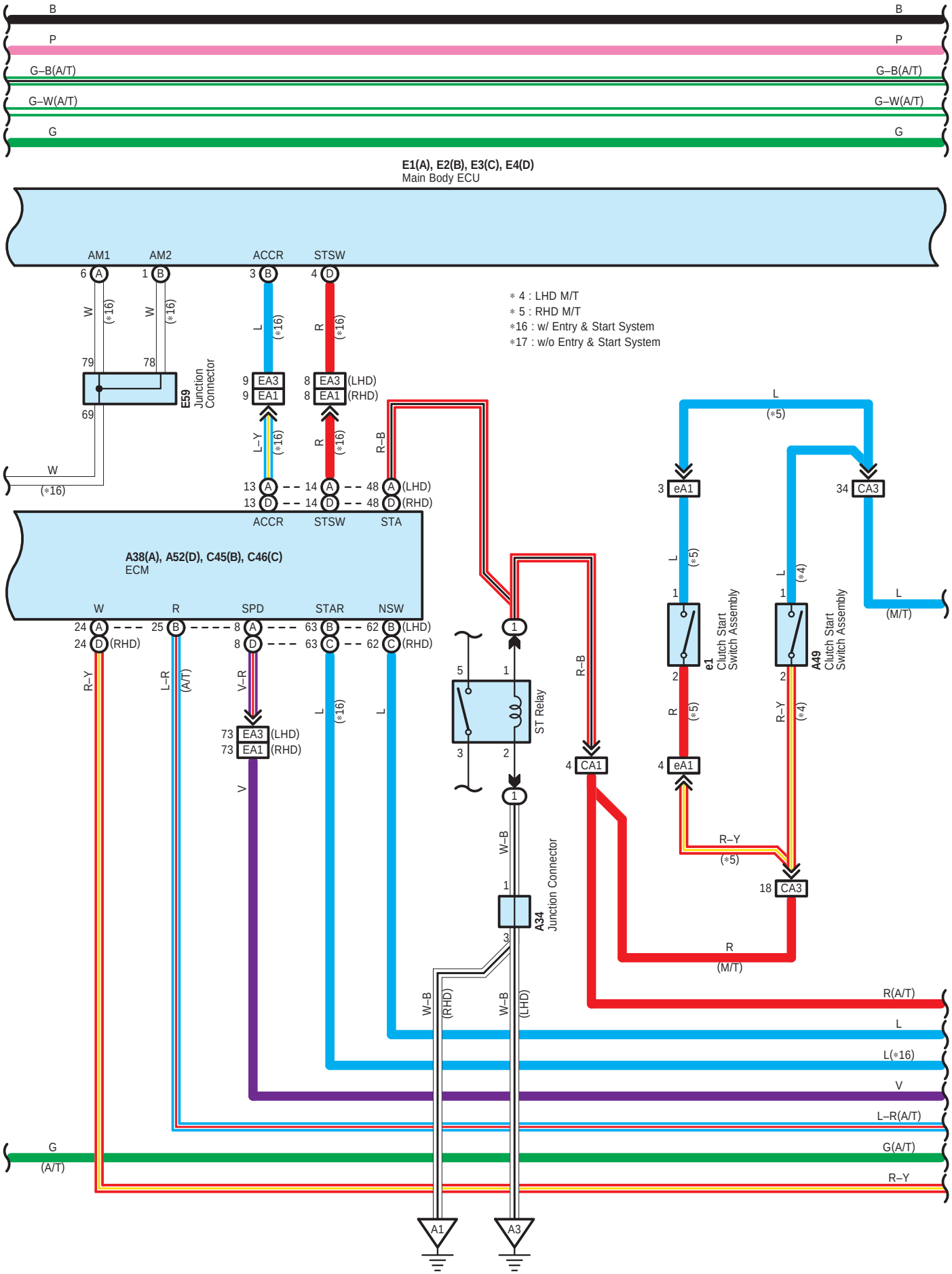
B
P
G–B(A/T)
G–W(A/T)
G
E1(A), E2(B), E3(C), E4(D)
Main Body ECU
AM1
AM2
ACCR
STSW
∗ 4 : LHD M/T
∗ 5 : RHD M/T
∗16 : w/ Entry & Start System
∗17 : w/o Entry & Start System
E59
Junction Connector
EA3
EA1
(LHD)
(RHD)
STA
A38(A), A52(D), C45(B), C46(C)
ECM
W
R
SPD
STAR
NSW
ST Relay
eA1
CA3
CA1
e1
Clutch Start Switch Assembly
A49
A34
Junction Connector
(M/T)
(A/T)
R(A/T)
L(∗16)
L–R(A/T)
G(A/T)
R–Y
A1
A3

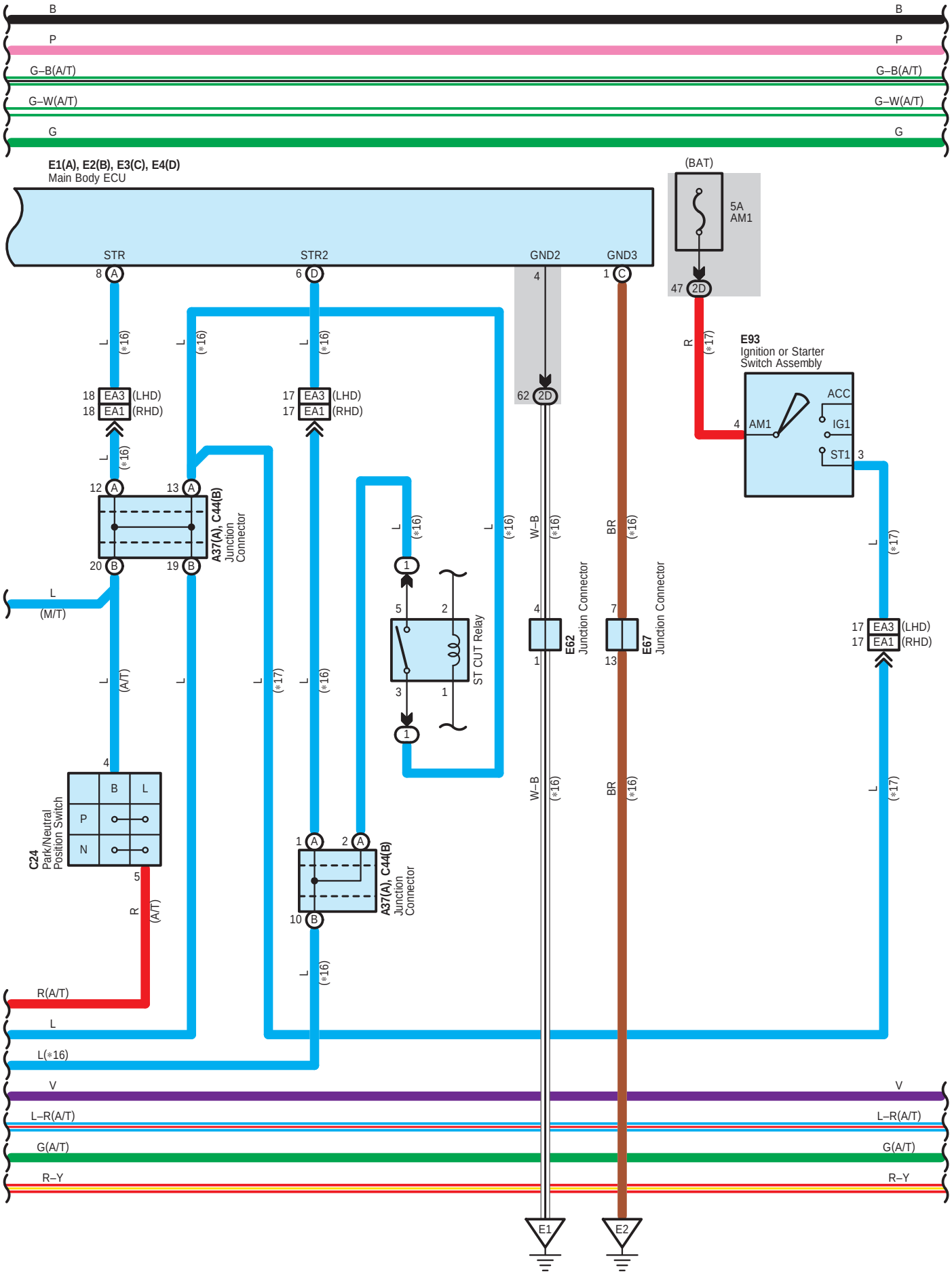
B
P
G–B(A/T)
G–W(A/T)
G
E1(A), E2(B), E3(C), E4(D)
Main Body ECU
STR
STR2
GND2
GND3
(BAT)
5A
AM1
47 2D
8 A
6 D
4
1 C
62 2D
E93
Ignition or Starter
Switch Assembly
ACC
IG1
ST1
AM1
18 EA3 (LHD)
18 EA1 (RHD)
17 EA3 (LHD)
17 EA1 (RHD)
12 A
13 A
20 B
19 B
A37(A), C44(B)
Junction
Connector
L
(M/T)
(A/T)
(*16)
(*17)
W–B
BR
ST CUT Relay
E62
Junction Connector
E67
Junction Connector
C24
Park/Neutral
Position Switch
P
N
R(A/T)
L(*16)
V
L–R(A/T)
G(A/T)
R–Y
E1
E2

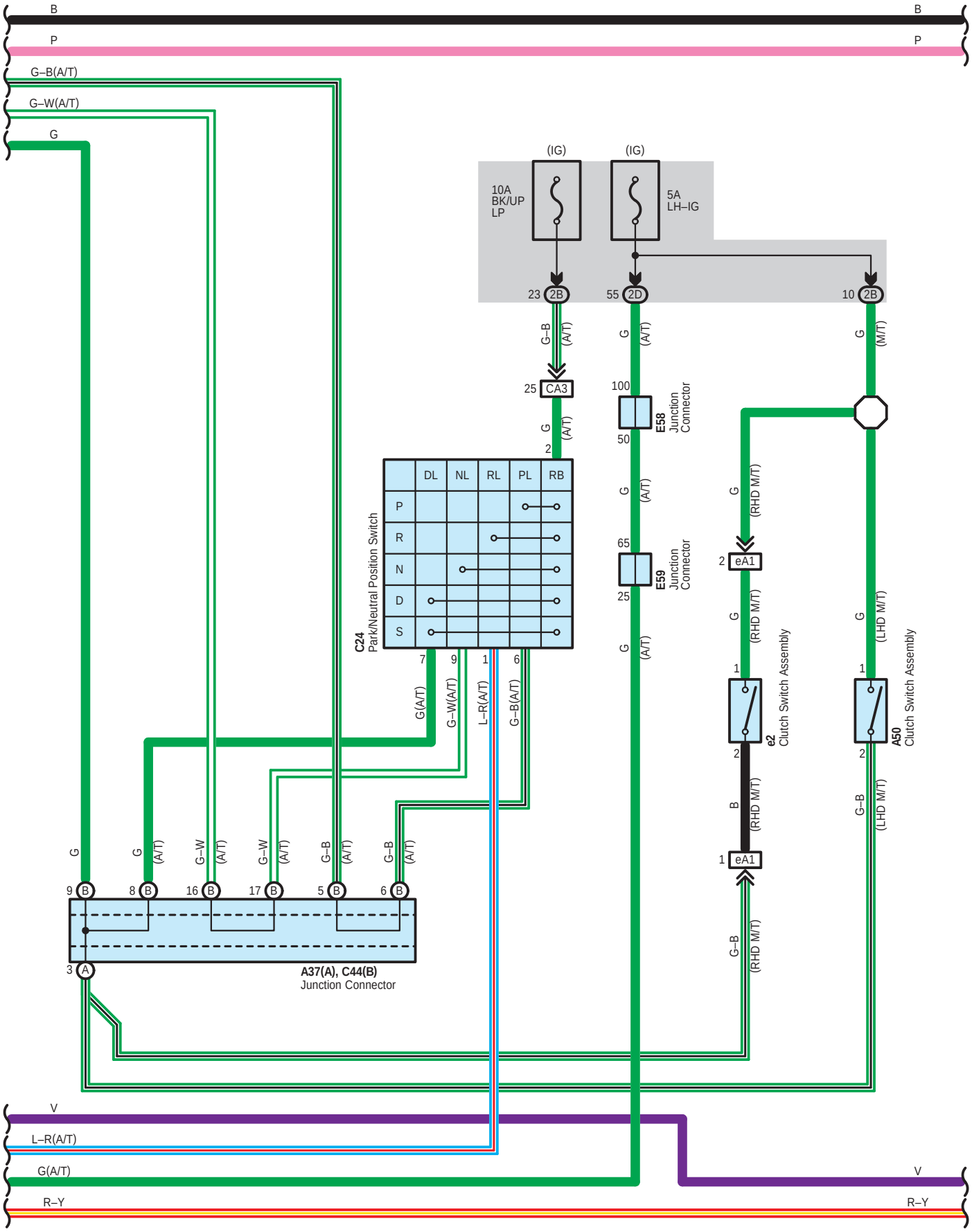
B
P
G–B(A/T)
G–W(A/T)
G
(IG)
(IG)
10A
BK/UP
LP
5A
LH–IG
23 2B
55 2D
10 2B
G–B (A/T)
G (A/T)
G (M/T)
25 CA3
100
E58
Junction
Connector
50
2
DL
NL
RL
PL
RB
P
R
N
D
S
C24
Park/Neutral Position Switch
65
E59
Junction
Connector
25
G (RHD M/T)
2 eA1
G (LHD M/T)
1
e2
Clutch Switch Assembly
A50
Clutch Switch Assembly
B (RHD M/T)
G–B (LHD M/T)
G–B (RHD M/T)
7
9
1
6
G(A/T)
G–W(A/T)
L–R(A/T)
G–B(A/T)
G–W (A/T)
G–B (A/T)
9 B
8 B
16 B
17 B
5 B
6 B
3 A
A37(A), C44(B)
Junction Connector
V
L–R(A/T)
G(A/T)
R–Y

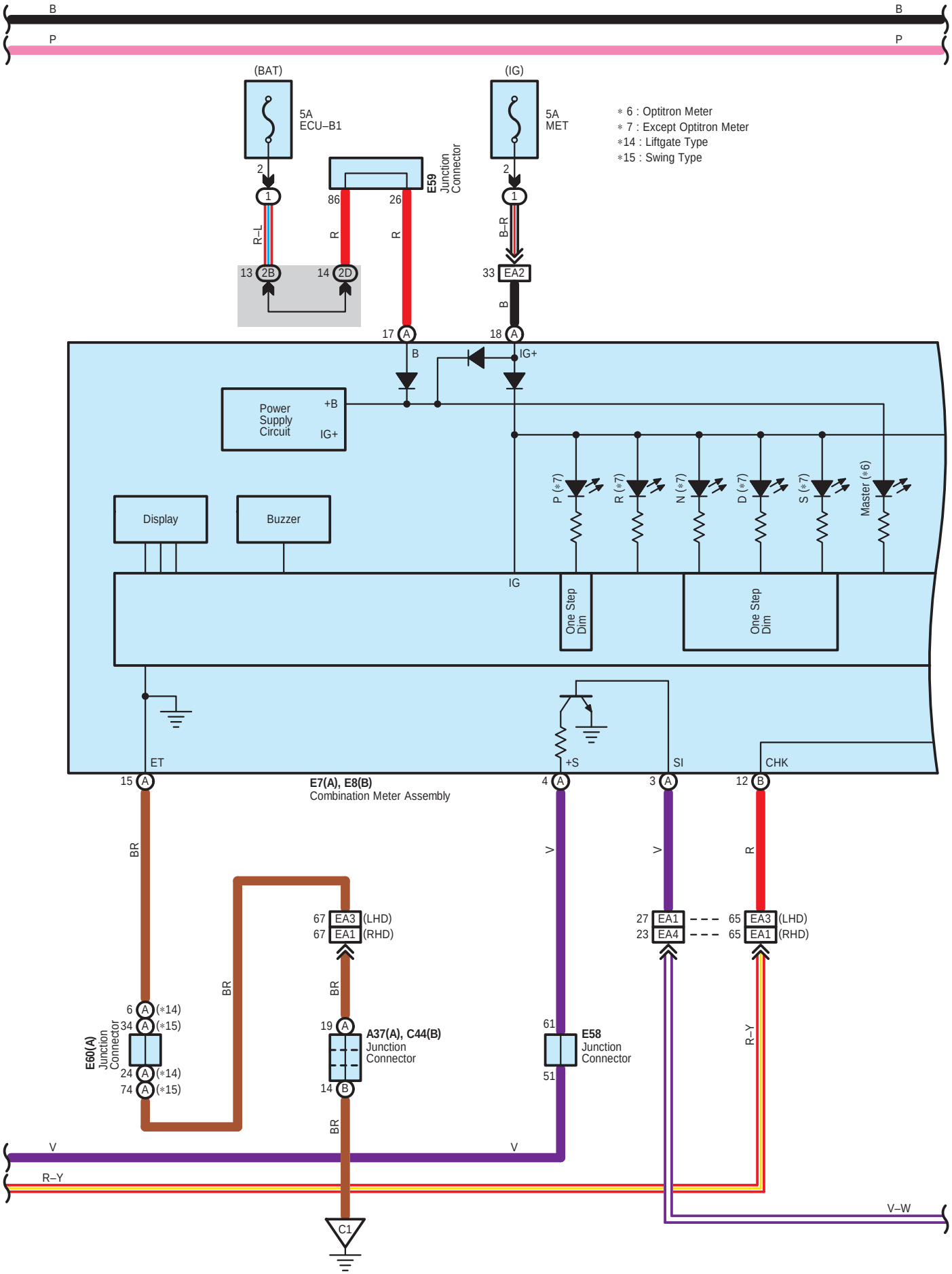
B
P
(BAT)
5A
ECU–B1
(IG)
5A
MET
∗ 6 : Optitron Meter
∗ 7 : Except Optitron Meter
∗14 : Liftgate Type
∗15 : Swing Type
E59
Junction
Connector
86
26
R–L
R
R
B–R
13 2B
14 2D
33 EA2
B
17 A
18 A
B
IG+
Power
Supply
Circuit
+B
IG+
Display
Buzzer
P (∗7)
R (∗7)
N (∗7)
D (∗7)
S (∗7)
Master (∗6)
IG
One Step
Dim
One Step
Dim
ET
+S
SI
CHK
15 A
E7(A), E8(B)
Combination Meter Assembly
4 A
3 A
12 B
BR
V
V
R
67 EA3 (LHD)
67 EA1 (RHD)
27 EA1
23 EA4
65 EA3 (LHD)
65 EA1 (RHD)
BR
BR
6 A (∗14)
34 A (∗15)
E60(A)
Junction
Connector
24 A (∗14)
74 A (∗15)
19 A
A37(A), C44(B)
Junction
Connector
14 B
61
E58
Junction
Connector
51
R–Y
BR
V
V
R–Y
V–W
C1

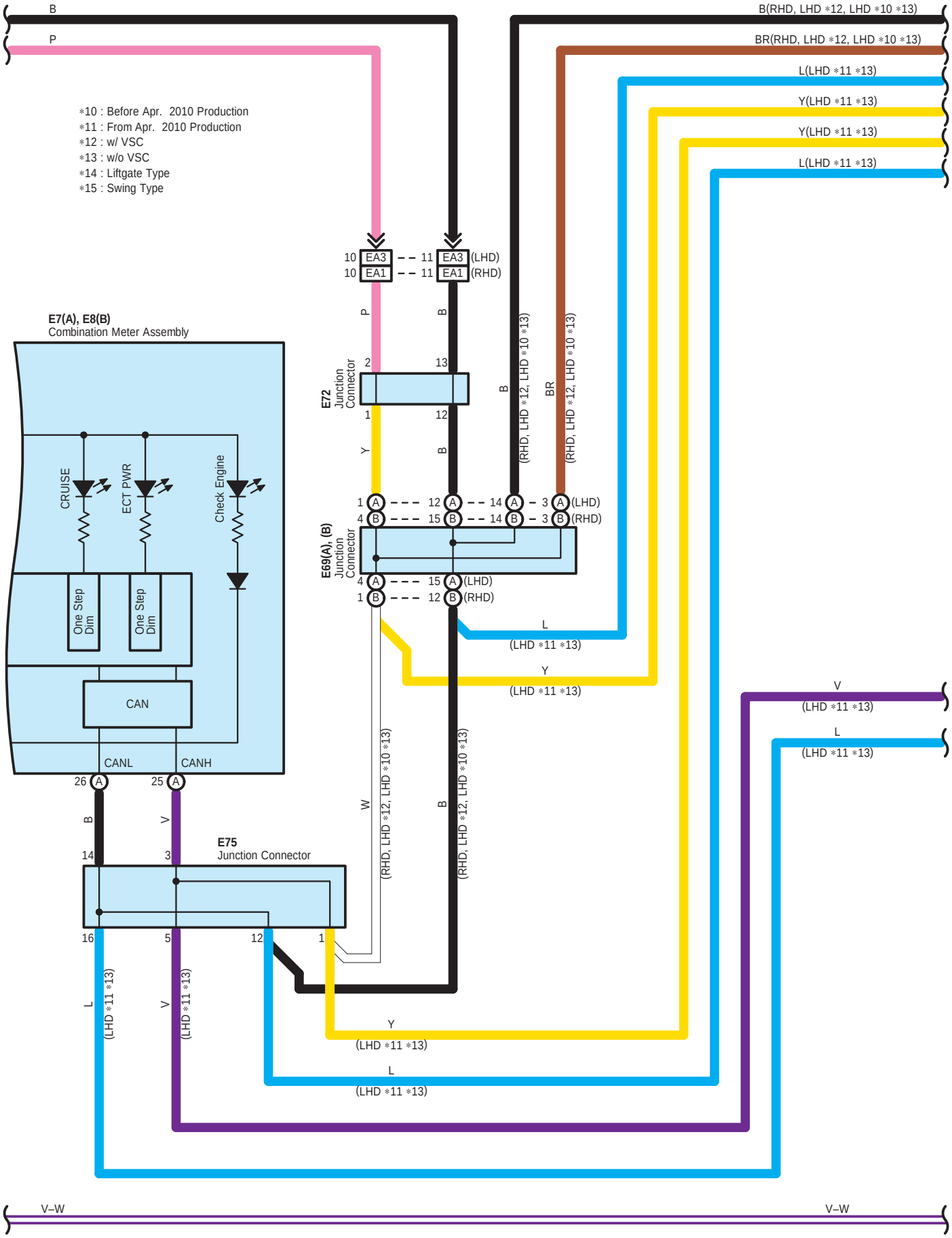
B
P
B(RHD, LHD *12, LHD *10 *13)
BR(RHD, LHD *12, LHD *10 *13)
L(LHD *11 *13)
Y(LHD *11 *13)
Y(LHD *11 *13)
L(LHD *11 *13)
*10 : Before Apr. 2010 Production
*11 : From Apr. 2010 Production
*12 : w/ VSC
*13 : w/o VSC
*14 : Liftgate Type
*15 : Swing Type
10 EA3 -- 11 EA3 (LHD)
10 EA1 -- 11 EA1 (RHD)
E7(A), E8(B)
Combination Meter Assembly
E72
Junction Connector
E69(A), (B)
Junction Connector
CRUISE
ECT PWR
Check Engine
One Step Dim
One Step Dim
CAN
CANL
CANH
E75
Junction Connector
(RHD, LHD *12, LHD *10 *13)
(LHD *11 *13)
V–W
V–W

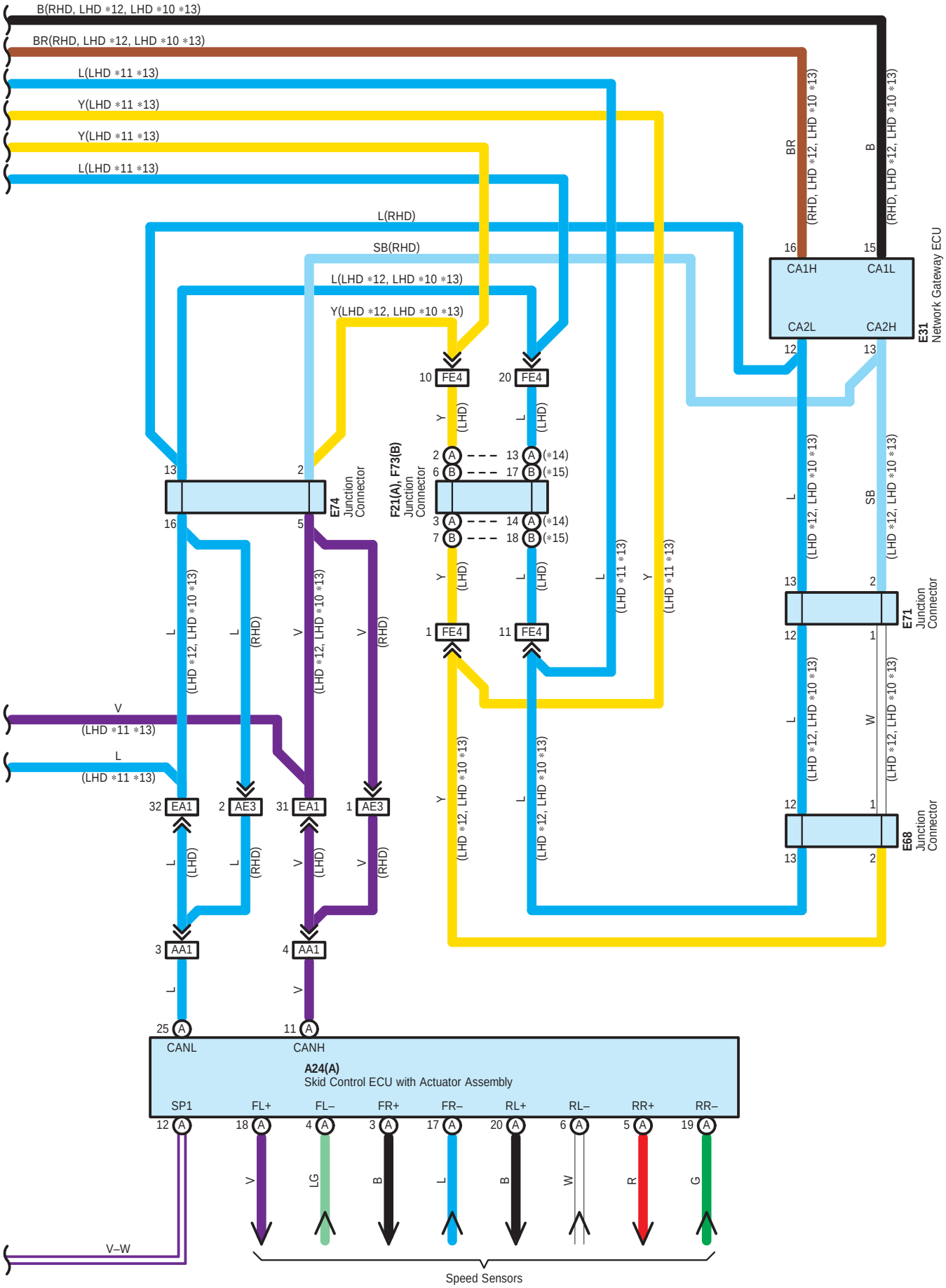
B(RHD, LHD *12, LHD *10 *13)
BR(RHD, LHD *12, LHD *10 *13)
L(LHD *11 *13)
Y(LHD *11 *13)
Y(LHD *11 *13)
L(LHD *11 *13)
L(RHD)
SB(RHD)
L(LHD *12, LHD *10 *13)
Y(LHD *12, LHD *10 *13)
BR
(RHD, LHD *12, LHD *10 *13)
B
(RHD, LHD *12, LHD *10 *13)
16
15
CA1H
CA1L
CA2L
CA2H
12
13
E31
Network Gateway ECU
10 FE4
20 FE4
Y
(LHD)
L
(LHD)
2 A
6 B
13 A (*14)
17 B (*15)
F21(A), F73(B)
Junction
Connector
3 A
7 B
14 A (*14)
18 B (*15)
13
2
16
5
E74
Junction
Connector
1 FE4
11 FE4
L
(LHD *11 *13)
Y
(LHD *11 *13)
L
(LHD *12, LHD *10 *13)
SB
(LHD *12, LHD *10 *13)
13
2
12
1
E71
Junction
Connector
L
(LHD *12, LHD *10 *13)
W
(LHD *12, LHD *10 *13)
L
(LHD *12, LHD *10 *13)
L
(RHD)
V
(LHD *12, LHD *10 *13)
V
(RHD)
V
(LHD *11 *13)
L
(LHD *11 *13)
32 EA1
2 AE3
31 EA1
1 AE3
L
(LHD)
L
(RHD)
V
(LHD)
V
(RHD)
Y
(LHD *12, LHD *10 *13)
L
(LHD *12, LHD *10 *13)
12
1
E68
Junction
Connector
13
2
3 AA1
4 AA1
L
V
25 A
11 A
CANL
CANH
A24(A)
Skid Control ECU with Actuator Assembly
SP1
FL+
FL–
FR+
FR–
RL+
RL–
RR+
RR–
12 A
18 A
4 A
3 A
17 A
20 A
6 A
5 A
19 A
V
LG
B
L
B
W
R
G
V–W
Speed Sensors

A 24
Black

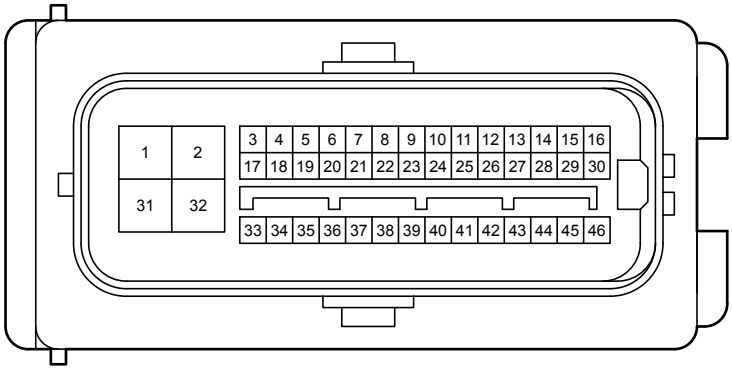

A 27
Black

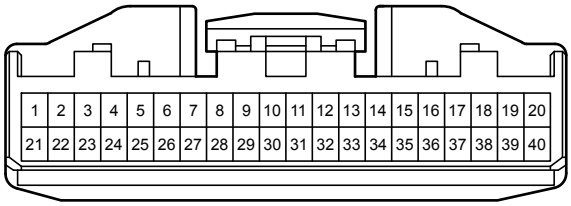

A 30
Gray

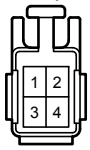

A 31
Black

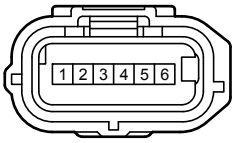

A 34
White

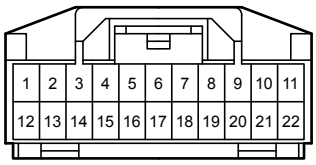

A 37
Blue

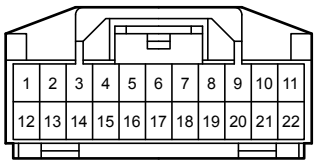

A 38
Black

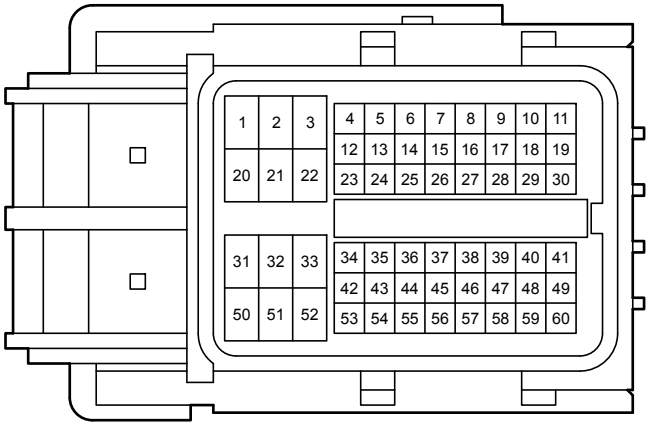

A 49
Black

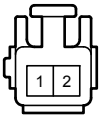

A 50
White

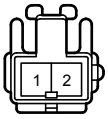

A 52
Black

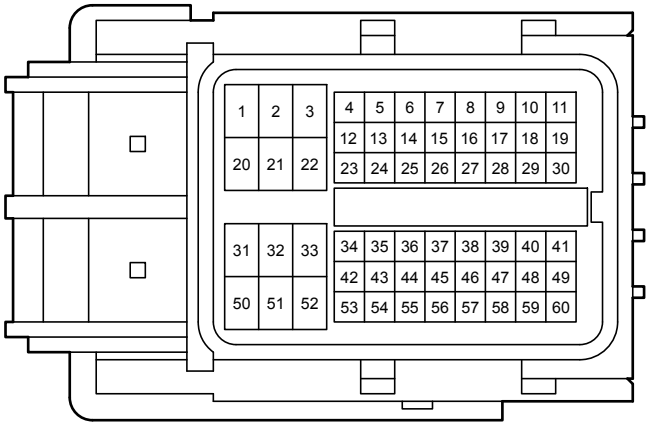

C 1
Black

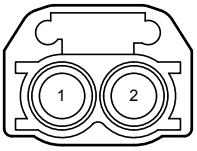

C 2
Black

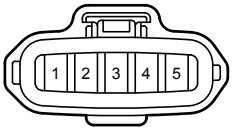

C 3
Black

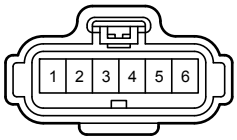

C 5
Gray

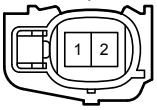

C 7
Gray

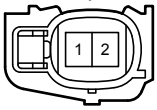

C 9
Gray

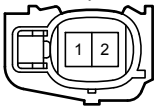

C 12
Gray

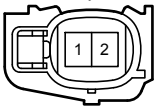

C 14
Gray

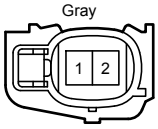

C 16
Gray

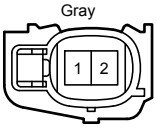

C 18
Dark Gray

C 19
Gray

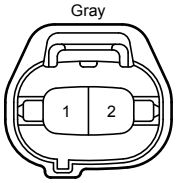

C 20
Dark Gray

C 21
Dark Gray

C 22
Dark Gray

C 23
Dark Gray

C 24
Gray

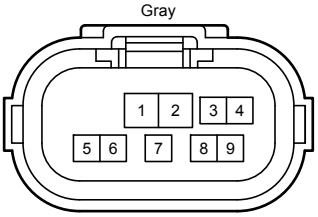

C 25
Black

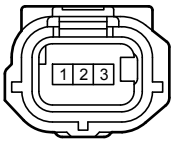

C 26
Black

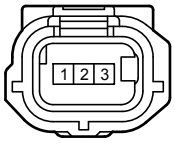

C 27
Black

C 28
Black

C 29
Black

C 31
Brown

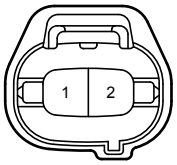

C 34
Gray

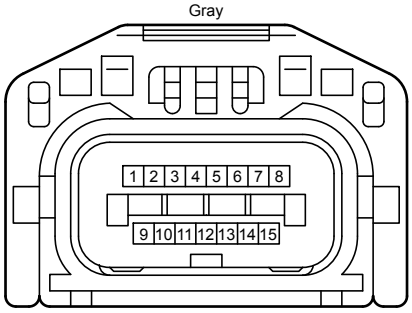

C 35
Black

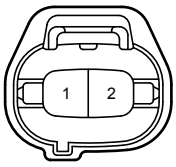

C 36
Black

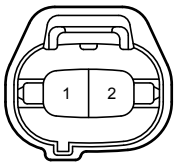

C 42
White

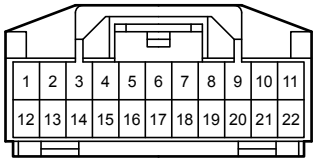

C 43
White

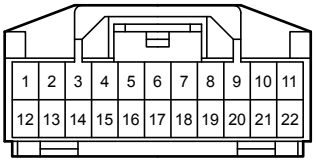

C 44
Blue

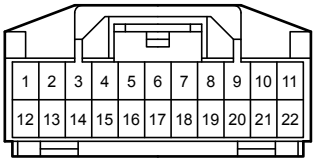

C 45
Black

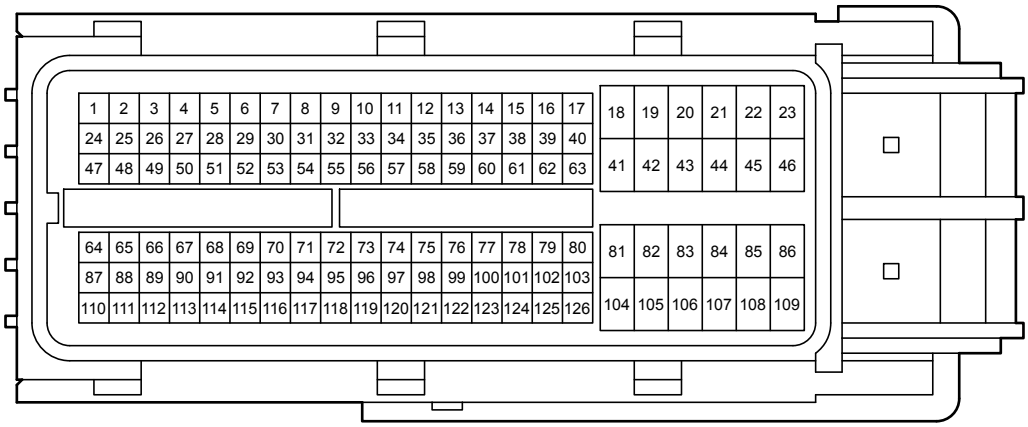

C 46
Black

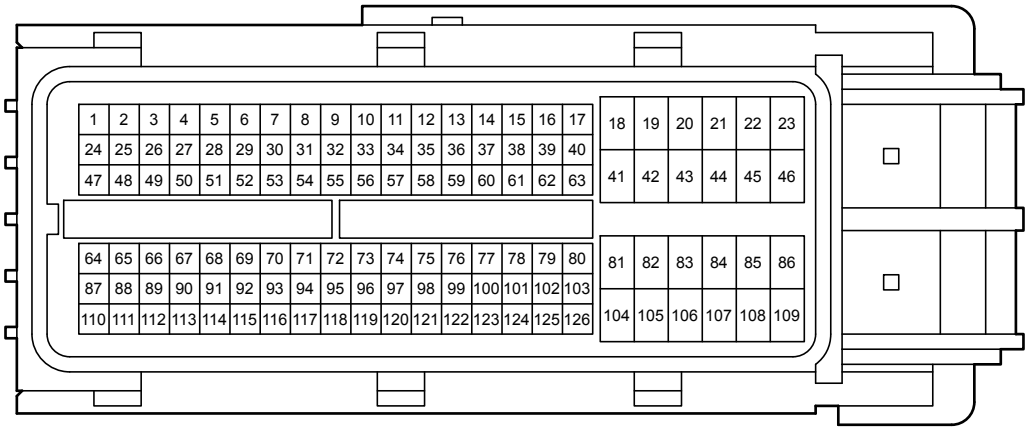

D 4
Black

E 1
White

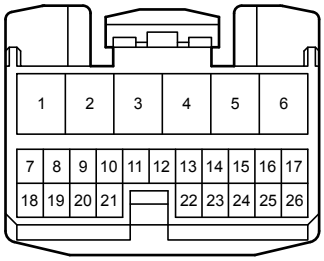

E 2
White

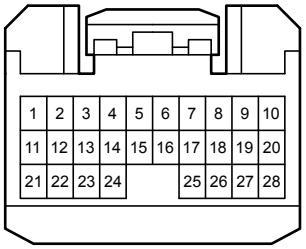

E 3
White

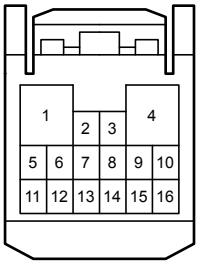

E 4
White

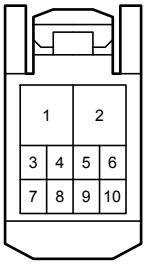

E 7

White

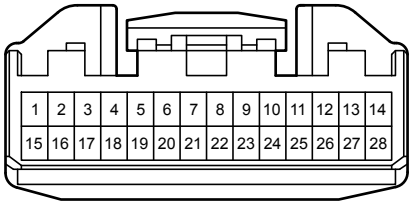

E 8

Black

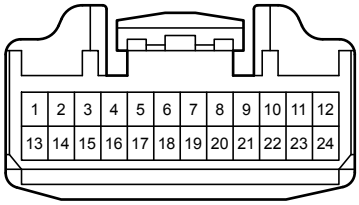

E 12

Black

E 22

White

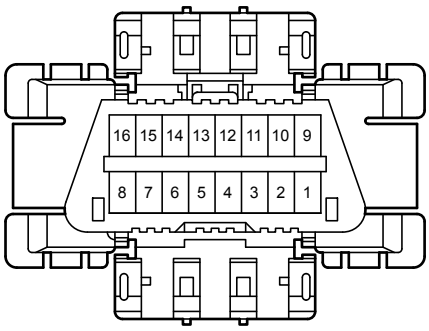

E 28

White

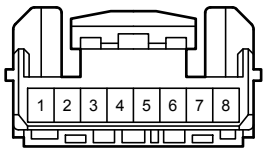

E 31

White

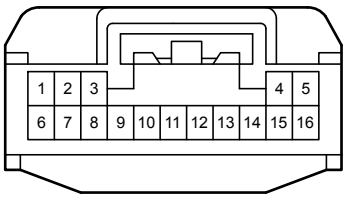

E 36

White

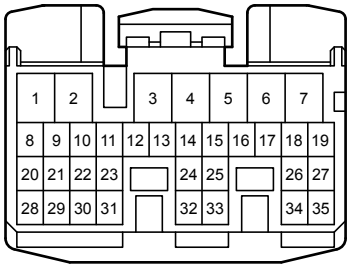

E 52

White

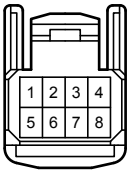

E 58

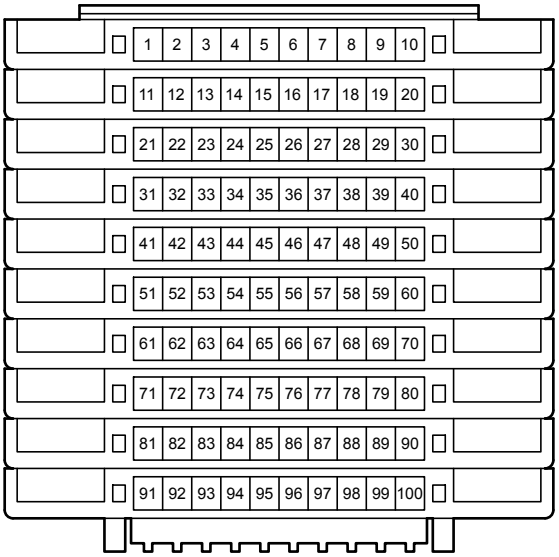

E 59

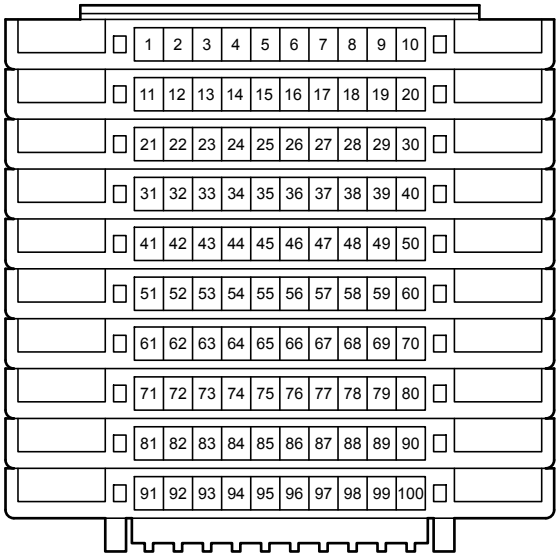

E 60

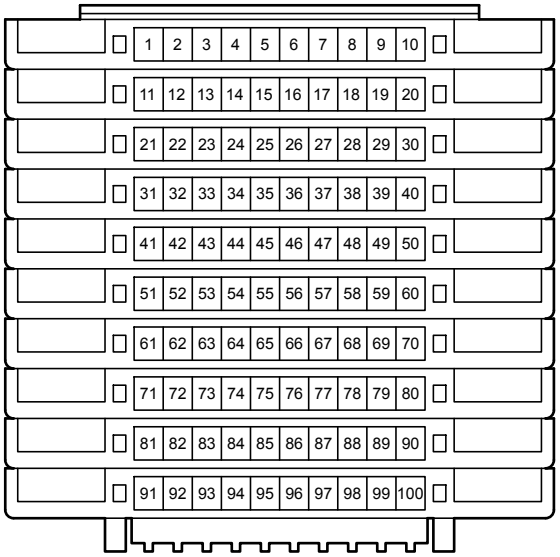

E 62
White

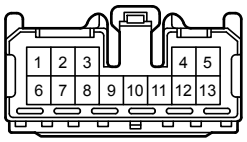

E 66
White

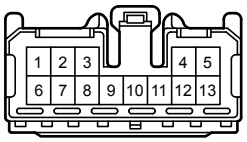

E 67
White

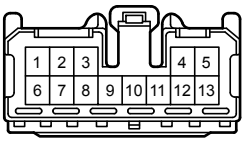

E 68
Gray

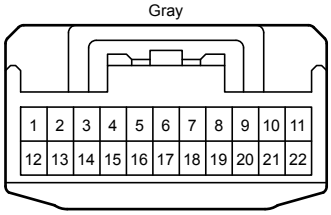

E 69
Gray

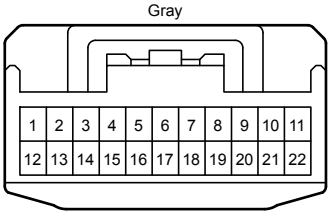

E 71
Gray

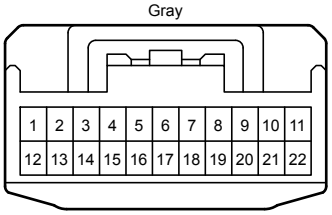

E 72
Gray

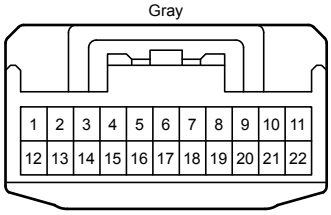

E 74
Gray

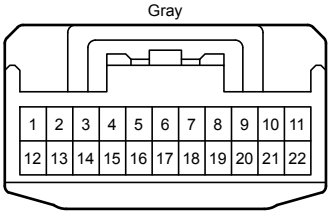

E 75
Gray

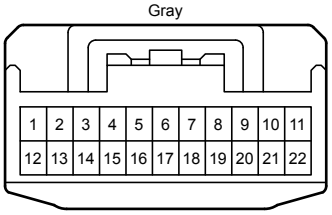

E 81
White

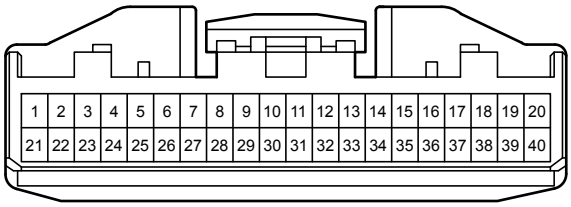

E 93
White

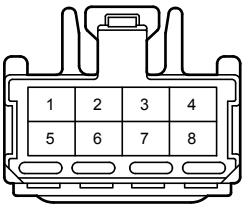

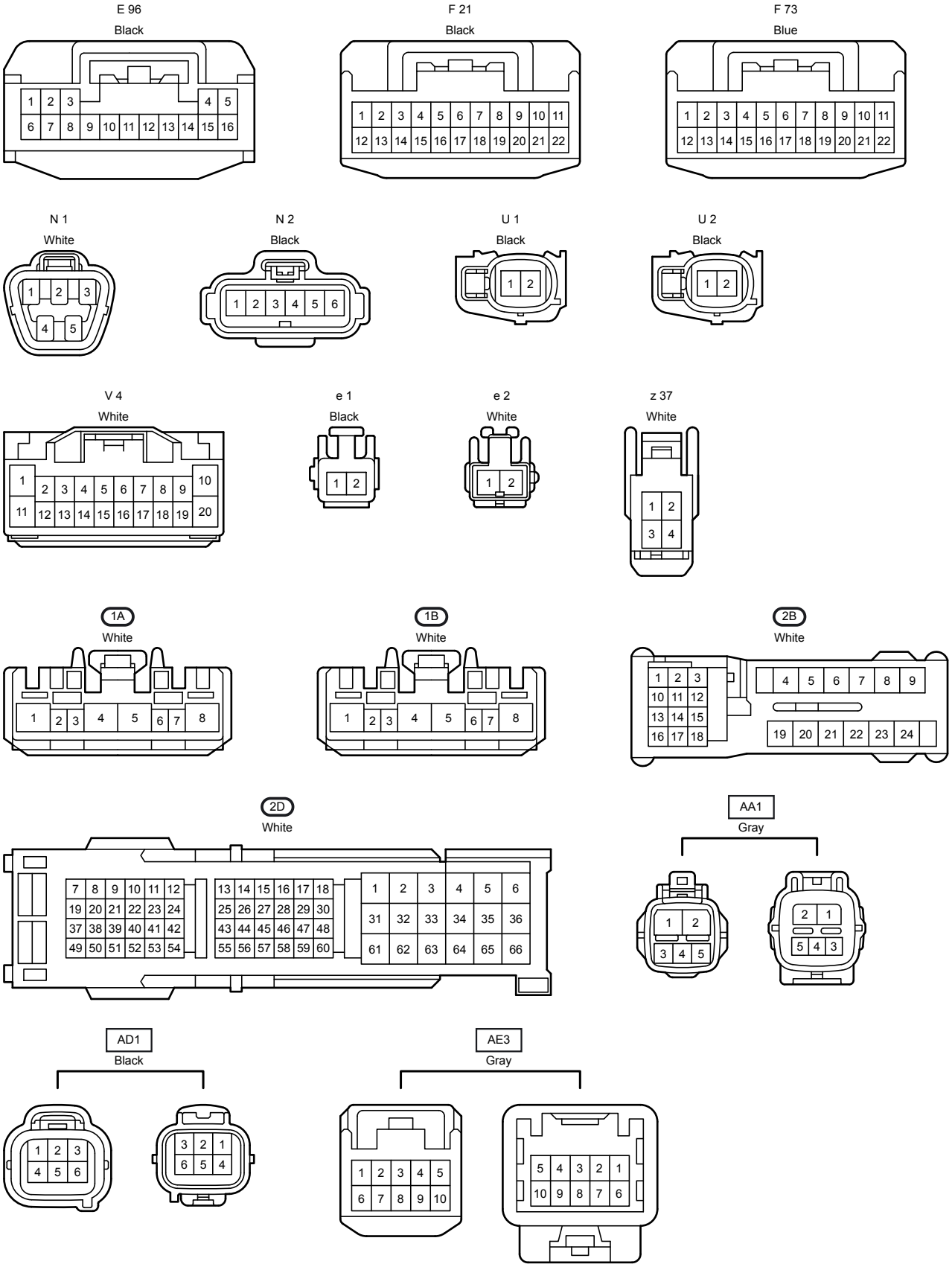
E 96
Black
F 21
Black
F 73
Blue
N 1
White
N 2
Black
U 1
Black
U 2
Black
V 4
White
e 1
Black
e 2
White
z 37
White
1A
White
1B
White
2B
White
2D
White
AA1
Gray
AD1
Black
AE3
Gray

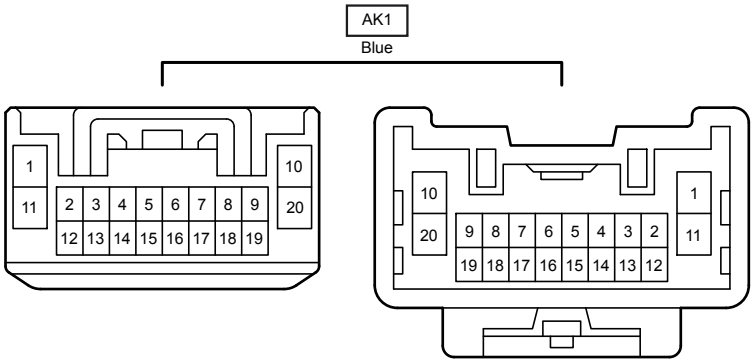
AK1
Blue
1 10 11 20
2 3 4 5 6 7 8 9
12 13 14 15 16 17 18 19
10 1 20 11
9 8 7 6 5 4 3 2
19 18 17 16 15 14 13 12

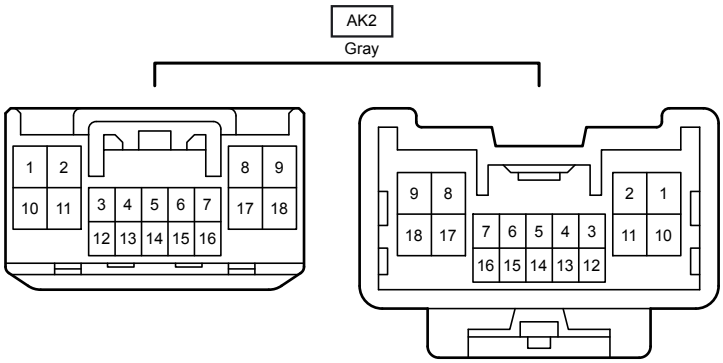
AK2
Gray
1 2 10 11
3 4 5 6 7
12 13 14 15 16
8 9 17 18
9 8 18 17
7 6 5 4 3
16 15 14 13 12
2 1 11 10

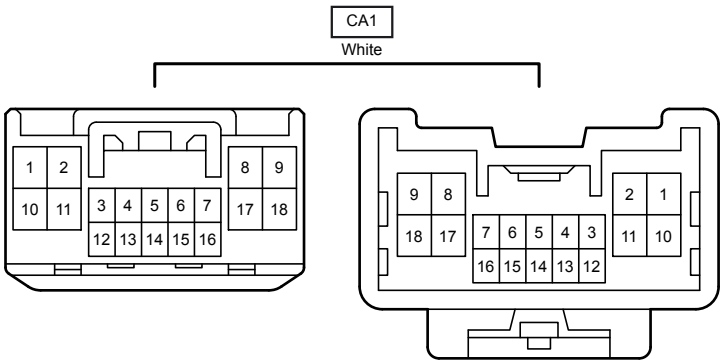
CA1
White
1 2 10 11
3 4 5 6 7
12 13 14 15 16
8 9 17 18
9 8 18 17
7 6 5 4 3
16 15 14 13 12
2 1 11 10

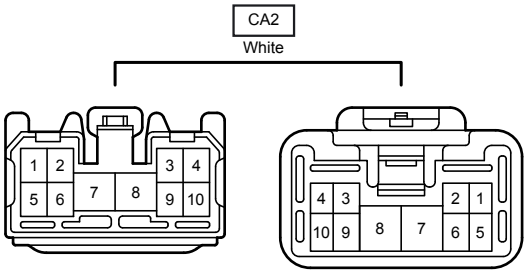
CA2
White
1 2 5 6
7 8
3 4 9 10
4 3 10 9
8 7
2 1 6 5

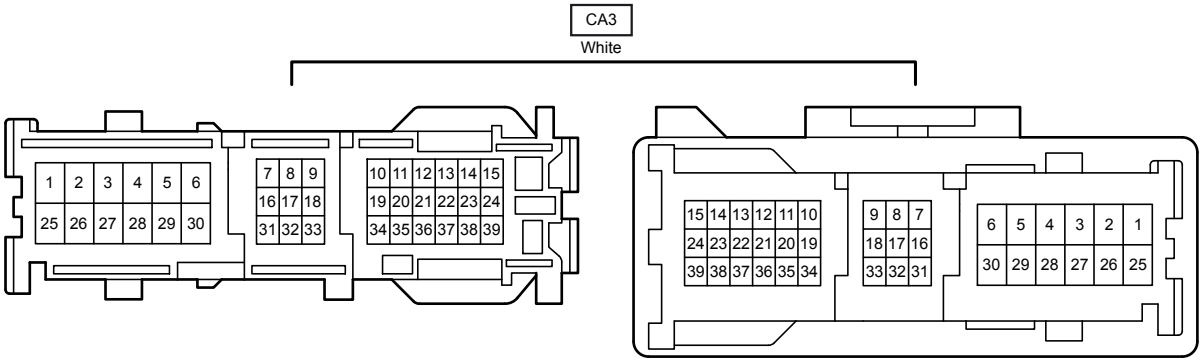
CA3
White
1 2 3 4 5 6
25 26 27 28 29 30
7 8 9
16 17 18
31 32 33
10 11 12 13 14 15
19 20 21 22 23 24
34 35 36 37 38 39
15 14 13 12 11 10
24 23 22 21 20 19
39 38 37 36 35 34
9 8 7
18 17 16
33 32 31
6 5 4 3 2 1
30 29 28 27 26 25

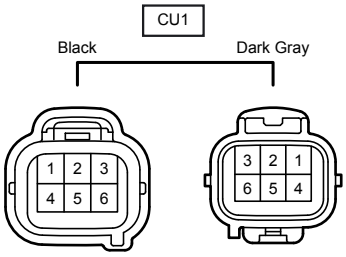
CU1
Black
Dark Gray
1 2 3
4 5 6
3 2 1
6 5 4

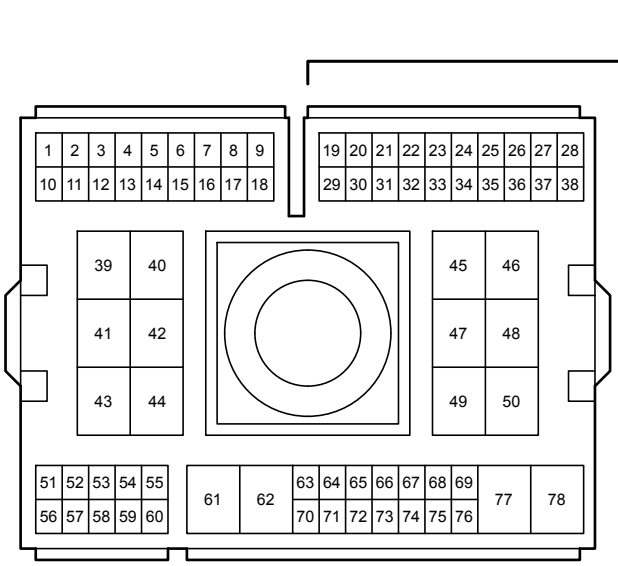
EA1
White
1 2 3 4 5 6 7 8 9
10 11 12 13 14 15 16 17 18
19 20 21 22 23 24 25 26 27 28
29 30 31 32 33 34 35 36 37 38
39 40
41 42
43 44
45 46
47 48
49 50
51 52 53 54 55
56 57 58 59 60
61 62
63 64 65 66 67 68 69
70 71 72 73 74 75 76
77 78

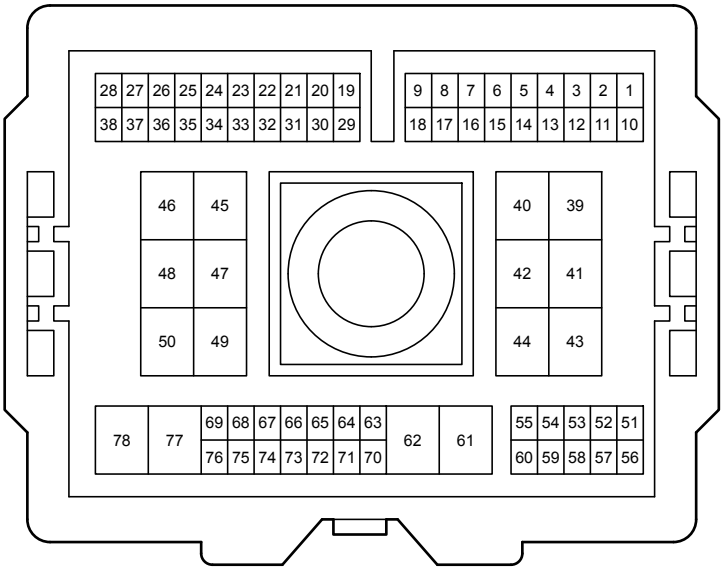
28 27 26 25 24 23 22 21 20 19
38 37 36 35 34 33 32 31 30 29
9 8 7 6 5 4 3 2 1
18 17 16 15 14 13 12 11 10
46 45
48 47
50 49
40 39
42 41
44 43
78 77
69 68 67 66 65 64 63
76 75 74 73 72 71 70
62 61
55 54 53 52 51
60 59 58 57 56

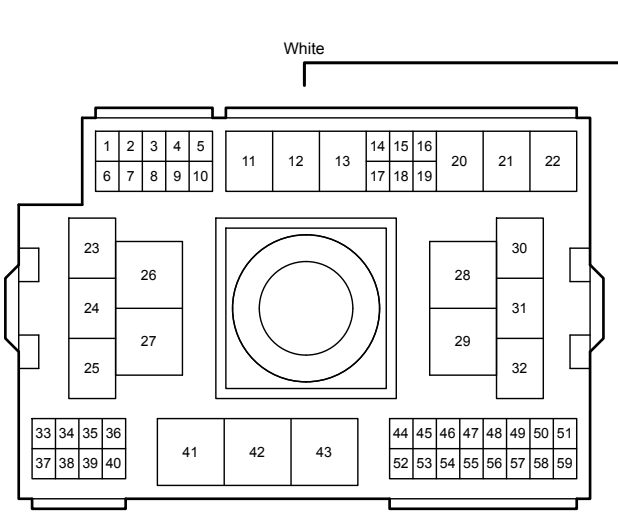
EA2
White
1 2 3 4 5
6 7 8 9 10
11 12 13
14 15 16
17 18 19
20 21 22
23
24
25
26
27
28
29
30
31
32
33 34 35 36
37 38 39 40
41 42 43
44 45 46 47 48 49 50 51
52 53 54 55 56 57 58 59

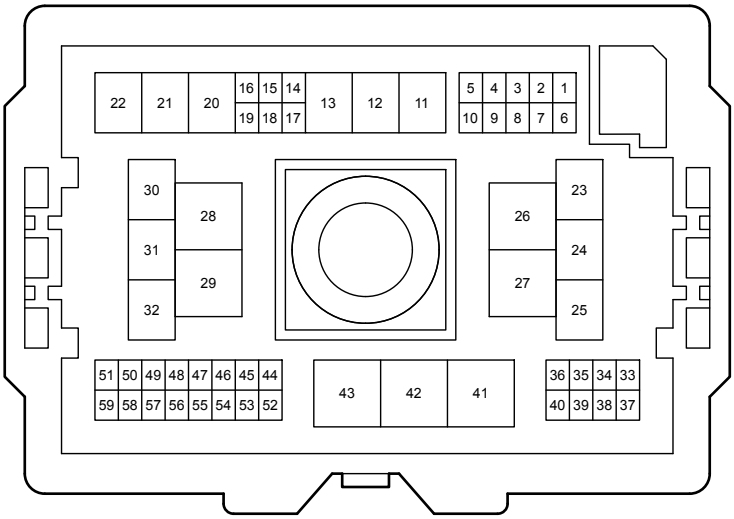
Gray
22 21 20
16 15 14
19 18 17
13 12 11
5 4 3 2 1
10 9 8 7 6
30
31
32
28
29
26
27
23
24
25
51 50 49 48 47 46 45 44
59 58 57 56 55 54 53 52
43 42 41
36 35 34 33
40 39 38 37

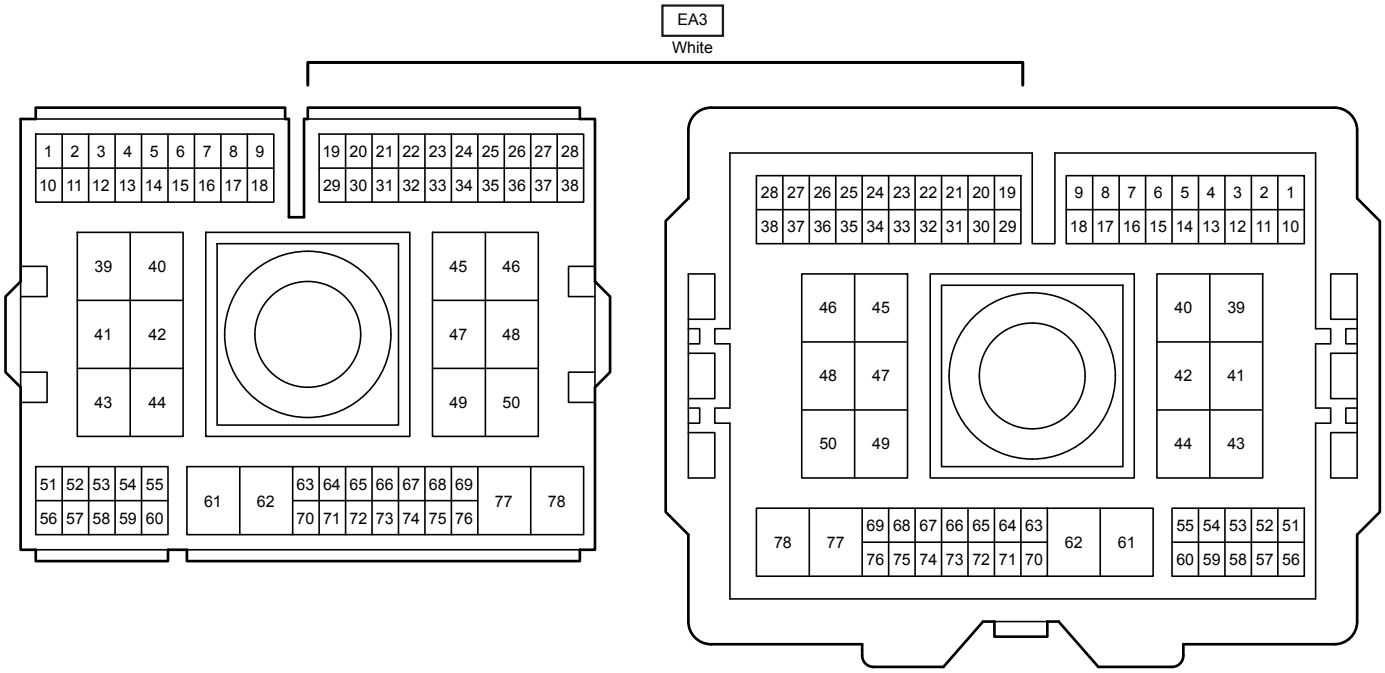
EA3
White

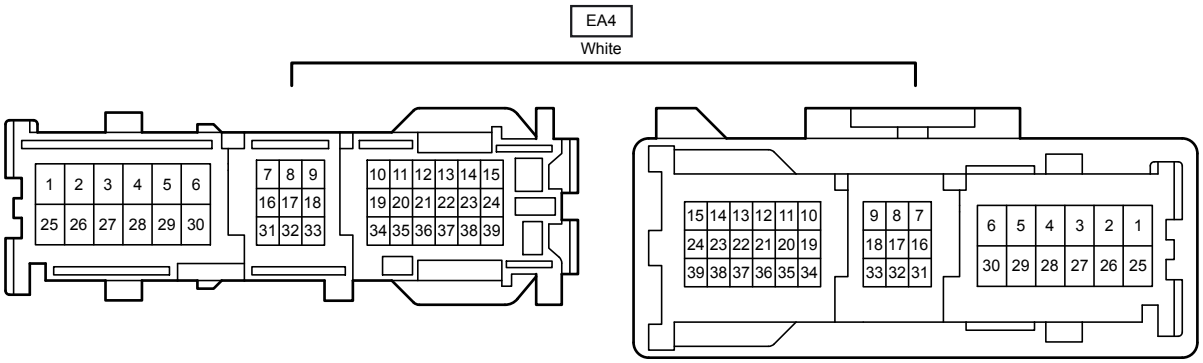
EA4
White

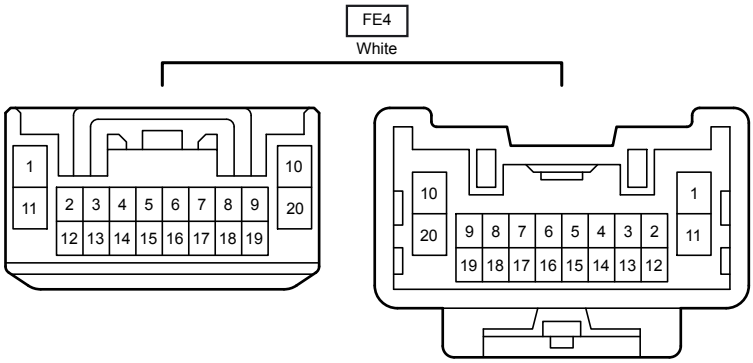
FE4
White

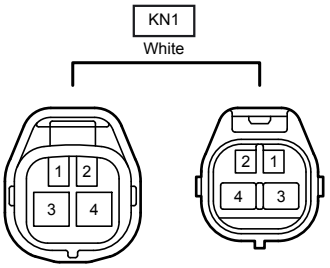
KN1
White

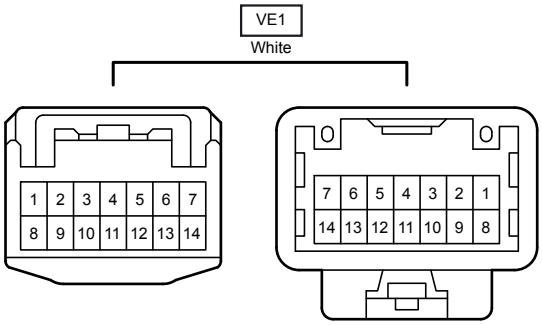
VE1
White

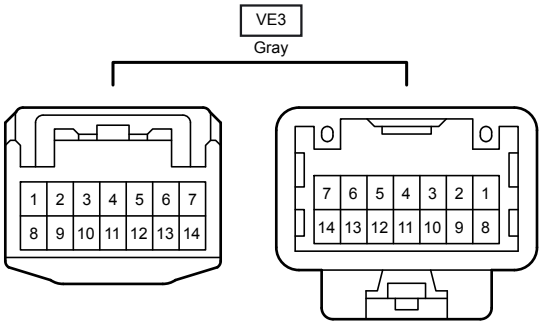
VE3
Gray

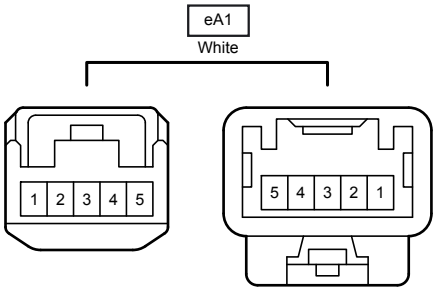
eA1
White
1
2
3
4
5
5
4
3
2
1