(Cont. next page)

Air Conditioner (From Aug. 2015 Production)

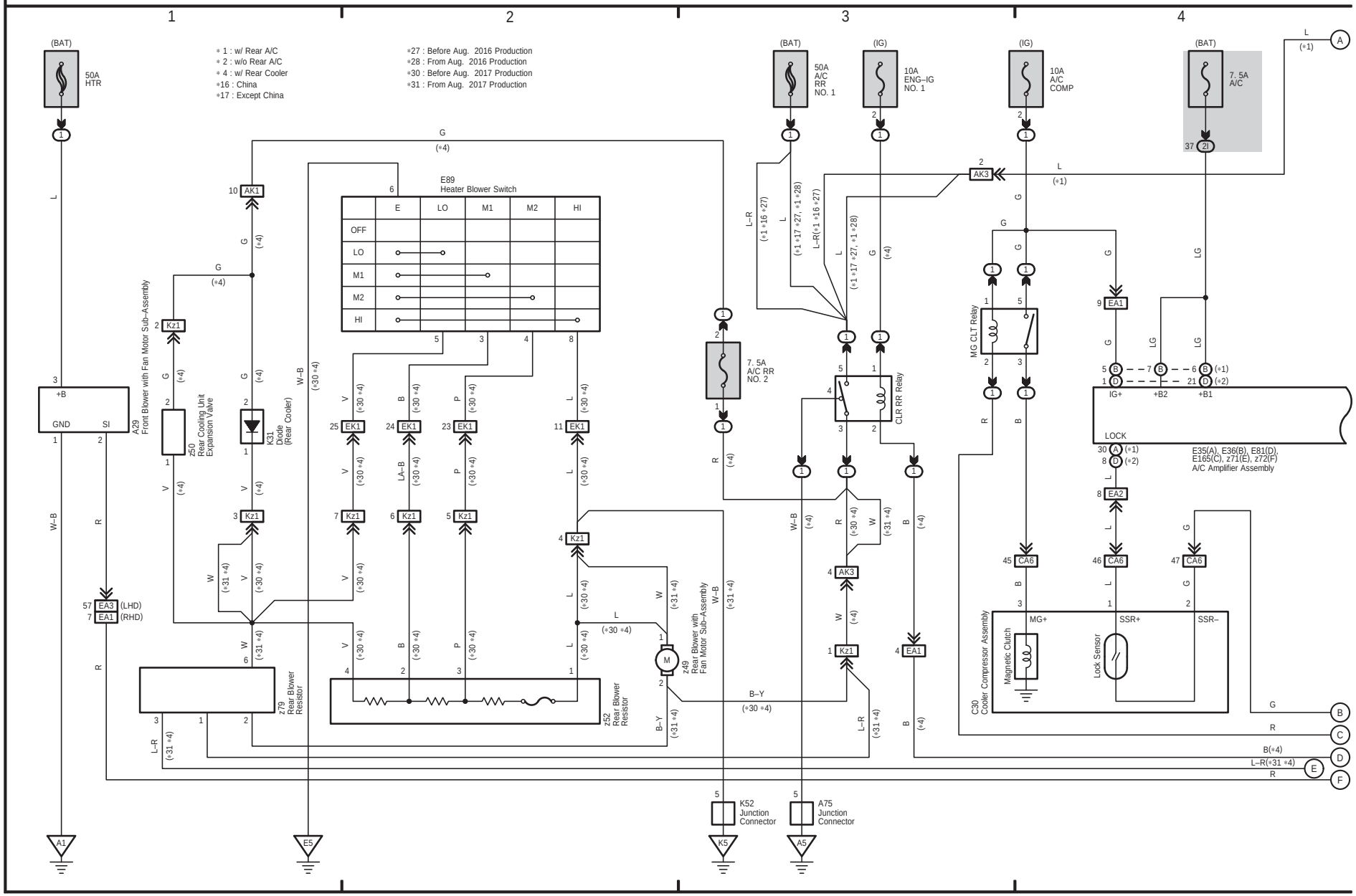

(Cont. next page)

Air Conditioner (From Aug. 2015 Production)

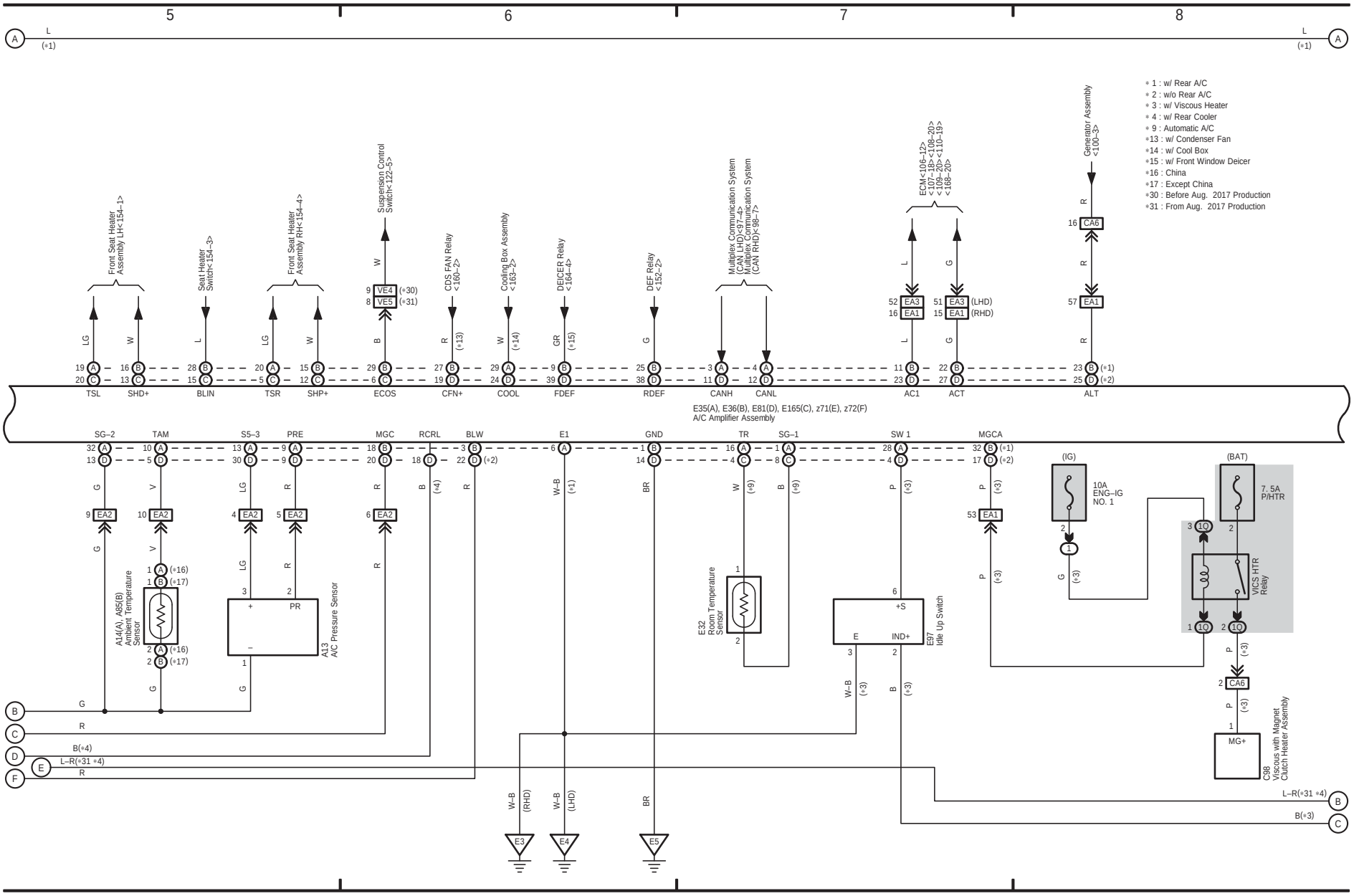

(Cont. next page)

Air Conditioner (From Aug. 2015 Production)

* 1 : w/ Rear A/C
* 2 : w/o Rear A/C
* 3 : w/ Viscous Heater
* 4 : w/ Rear Cooler
*31 : From Aug. 2017 Production

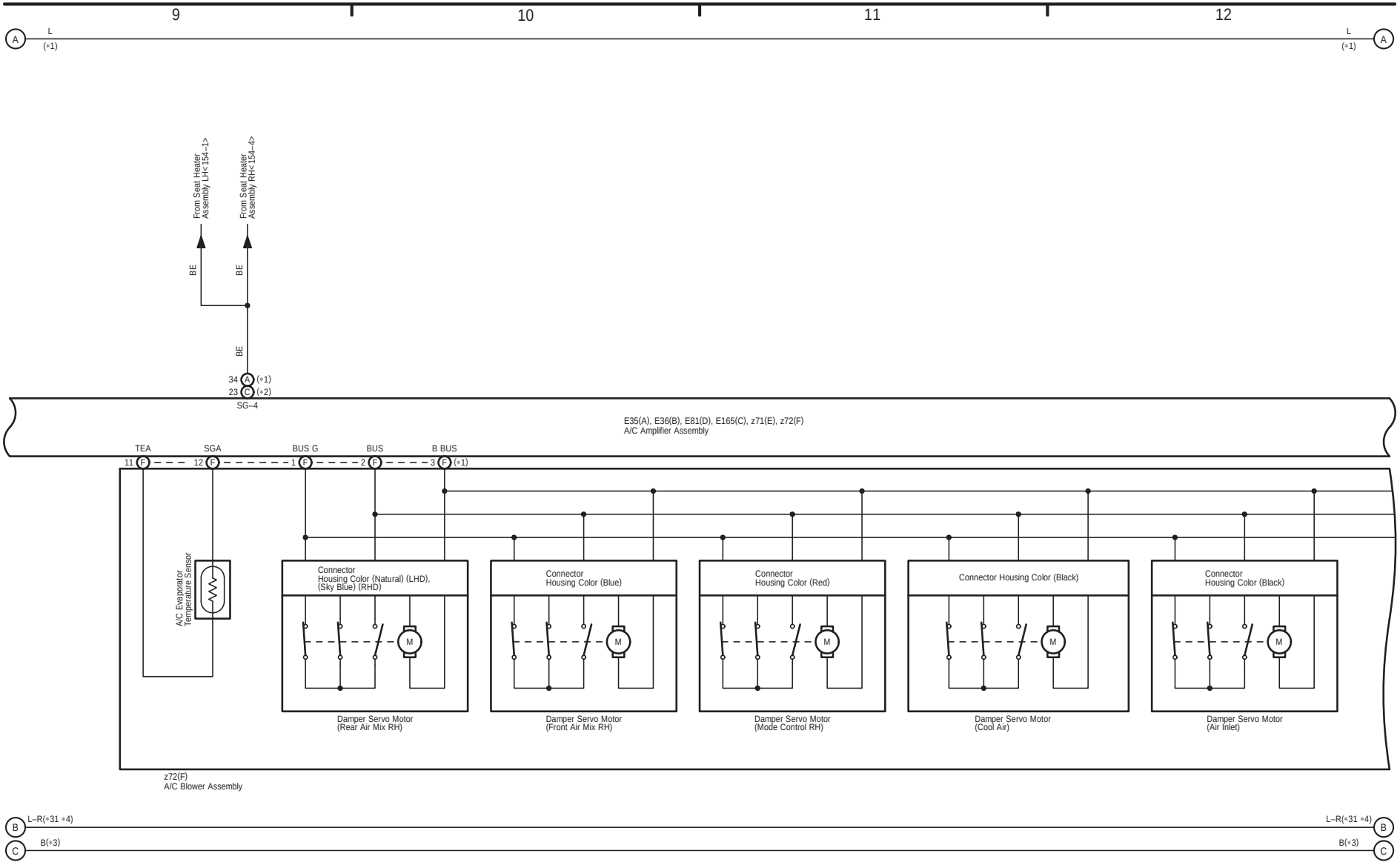

(Cont. next page)

Air Conditioner (From Aug. 2015 Production)

∗ 1 : w/ Rear A/C
∗ 3 : w/ Viscous Heater
∗ 4 : w/ Rear Cooler
∗31 : From Aug. 2017 Production

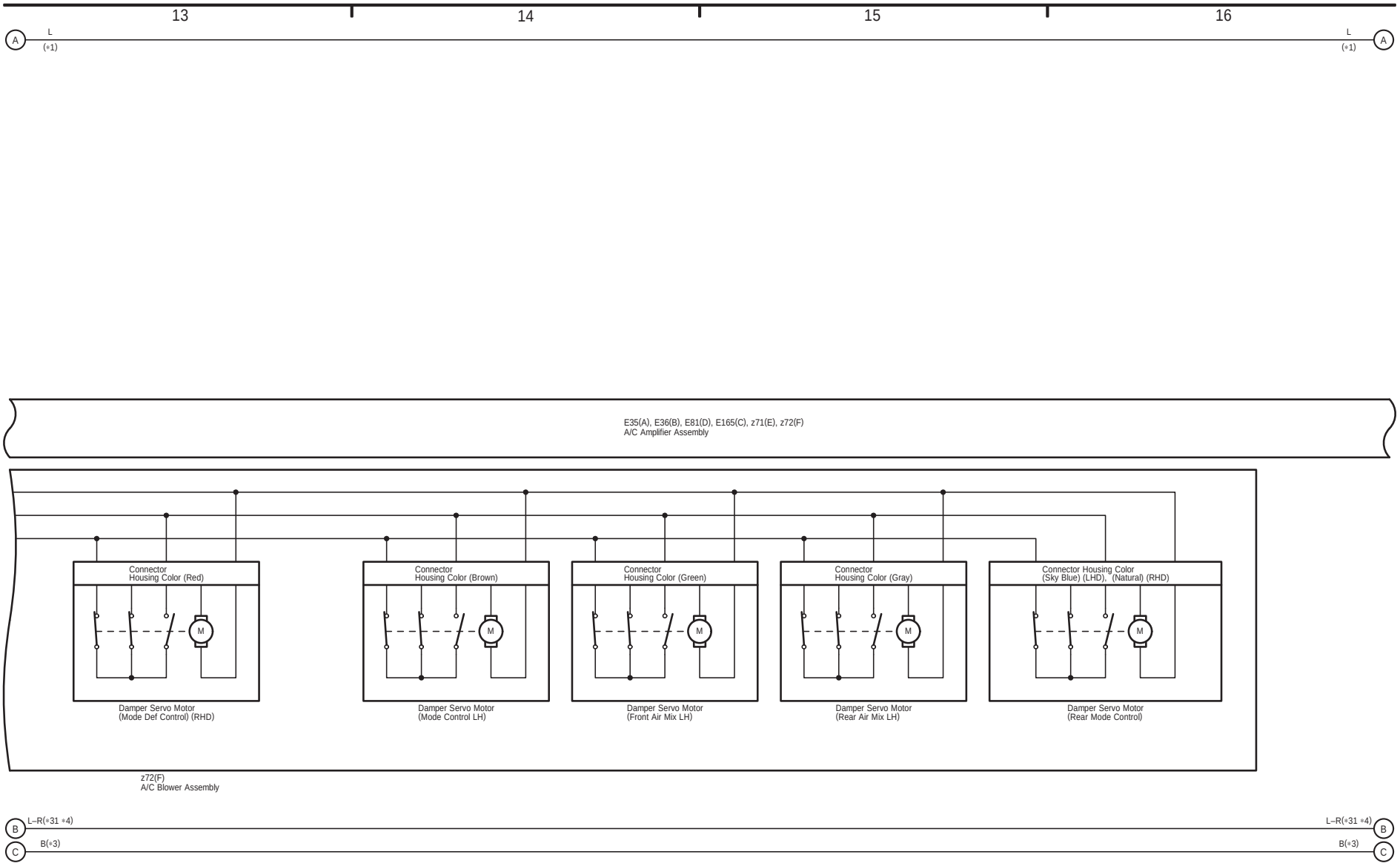

(Cont. next page)

Air Conditioner (From Aug. 2015 Production)

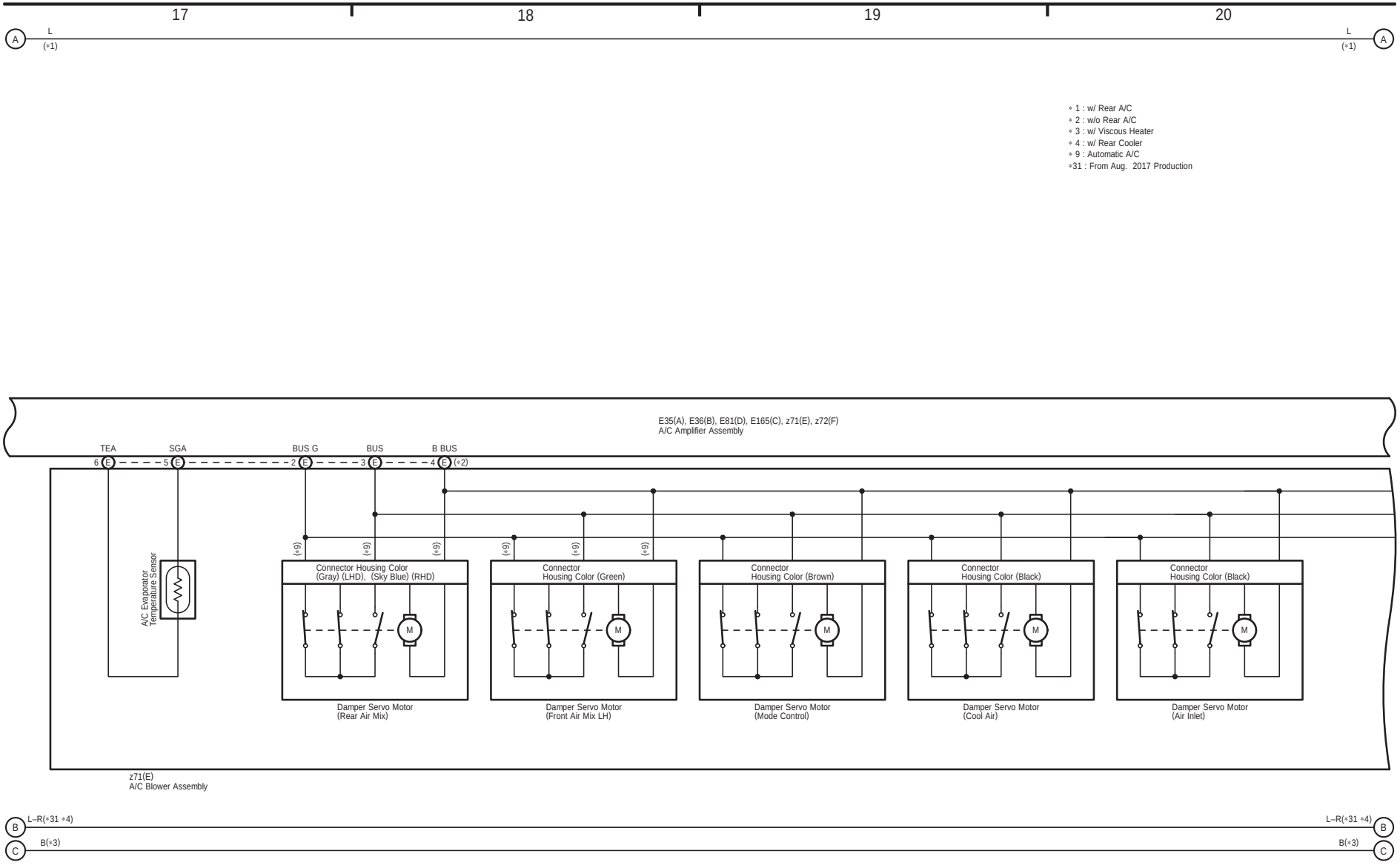

(Cont. next page)

Air Conditioner (From Aug. 2015 Production)

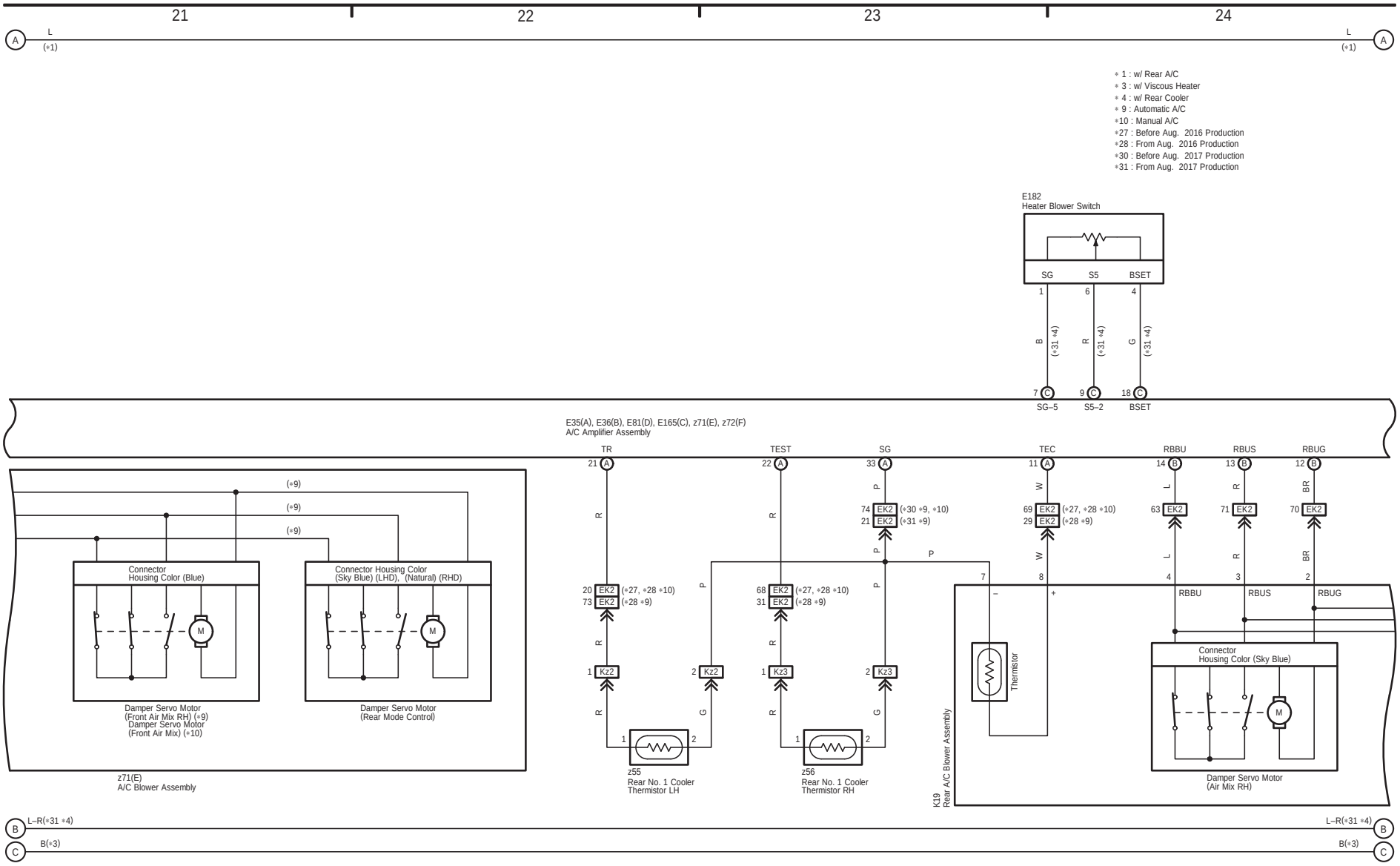

(Cont. next page)

Air Conditioner (From Aug. 2015 Production)

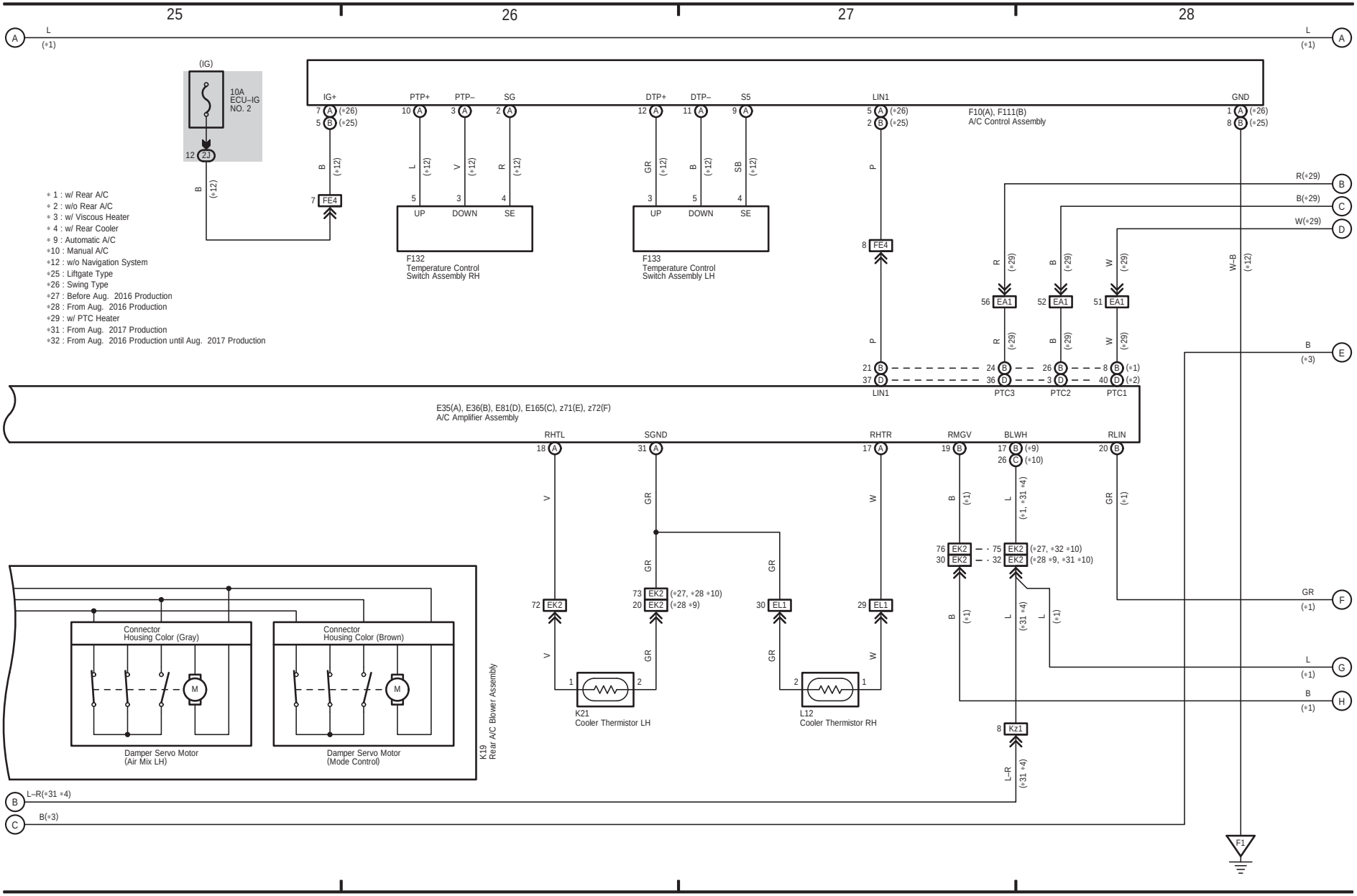
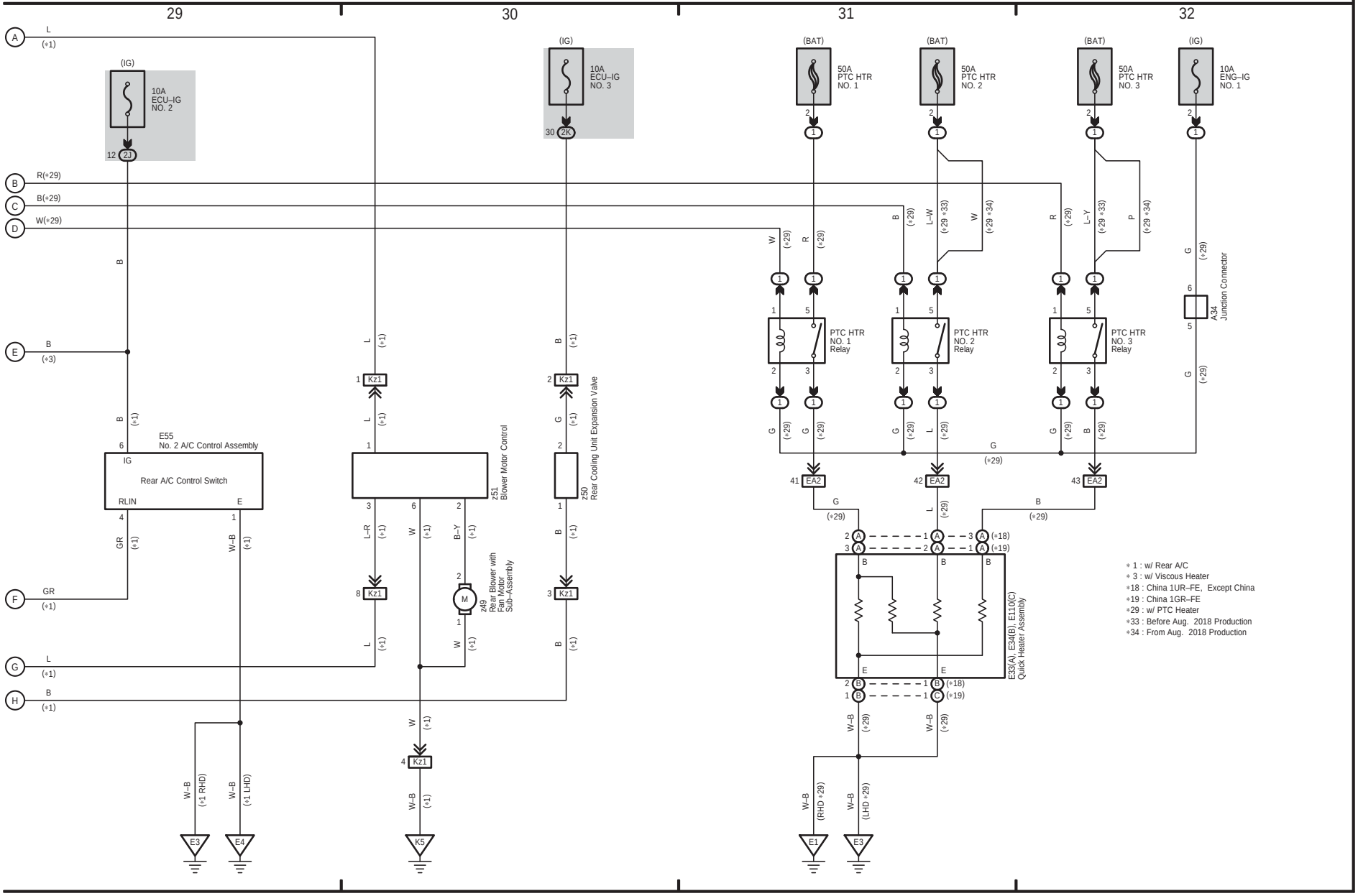
Air Conditioner (From Aug. 2015 Production)