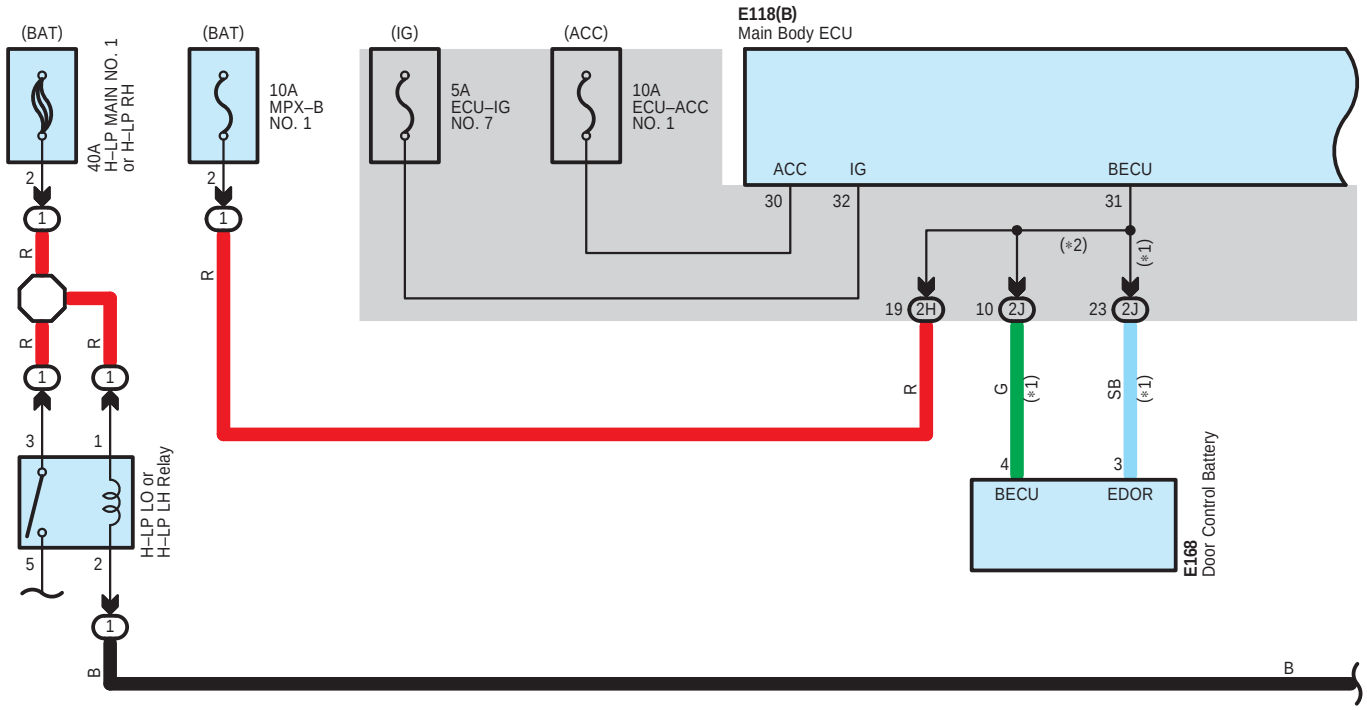

* 1 : w/ Door Control Battery
* 2 : w/o Door Control Battery
* 3 : LHD w/ Entry & Start System,
  RHD Headlight Dimmer Switch Assembly LH Side Type
* 4 : RHD Headlight Dimmer Switch Assembly RH Side Type
  w/ Entry & Start System
* 5 : LHD w/o Entry & Start System
* 6 : RHD Headlight Dimmer Switch Assembly RH Side Type
  w/o Entry & Start System
* 7 : w/ Automatic Light Control

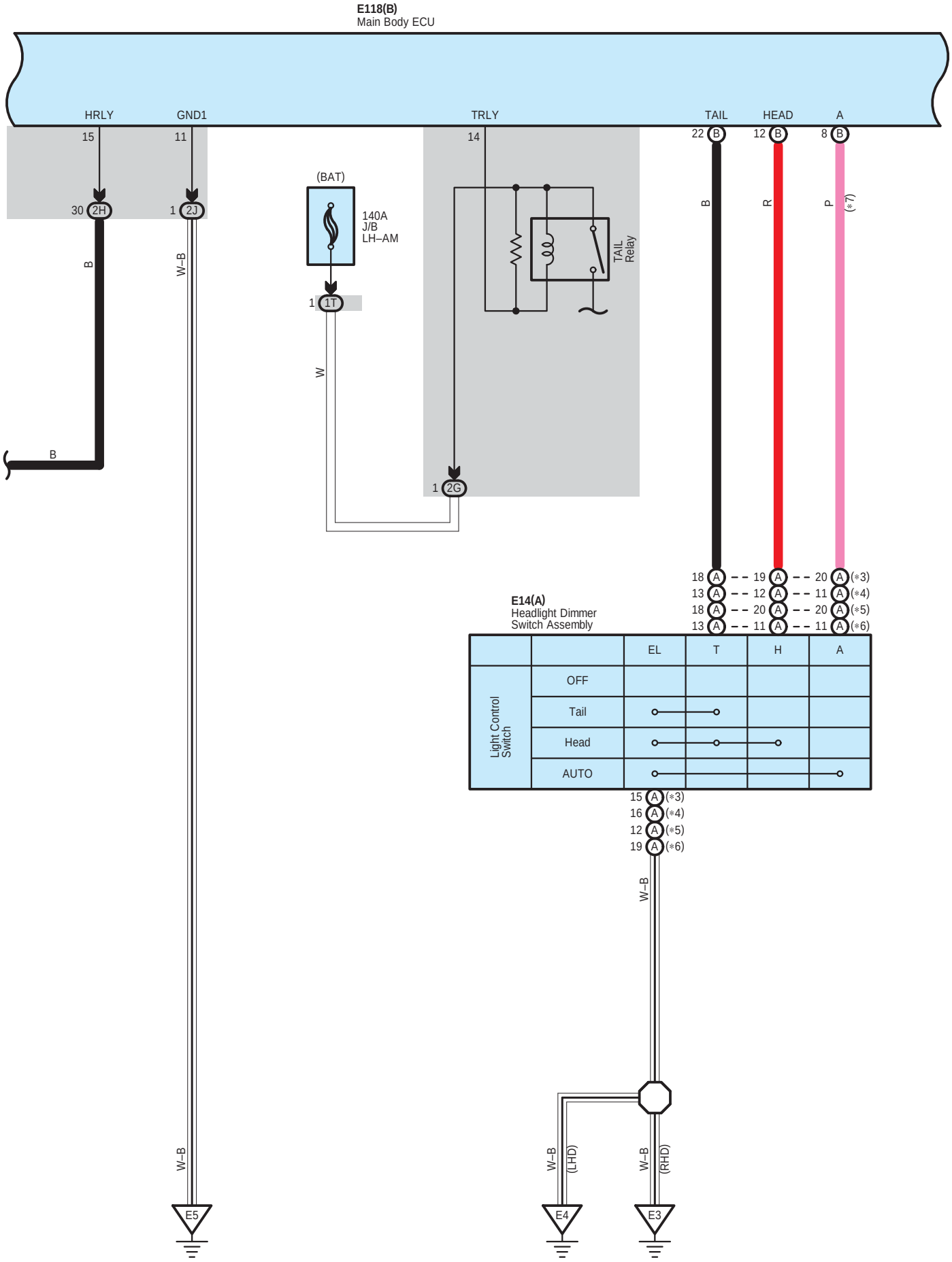
E118(B)
Main Body ECU
HRLY
GND1
TRLY
TAIL
HEAD
A
15
11
14
22 B
12 B
8 B
30 2H
1 2J
(BAT)
140A
J/B
LH–AM
1 1T
TAIL
Relay
B
W–B
W
R
P
(*7)
B
1 2G
18 A
19 A
20 A (*3)
13 A
12 A
11 A (*4)
18 A
20 A
20 A (*5)
13 A
11 A
11 A (*6)
E14(A)
Headlight Dimmer
Switch Assembly
EL
T
H
A
Light Control
Switch
OFF
Tail
Head
AUTO
15 A (*3)
16 A (*4)
12 A (*5)
19 A (*6)
W–B
W–B
(LHD)
W–B
(RHD)
E5
E4
E3

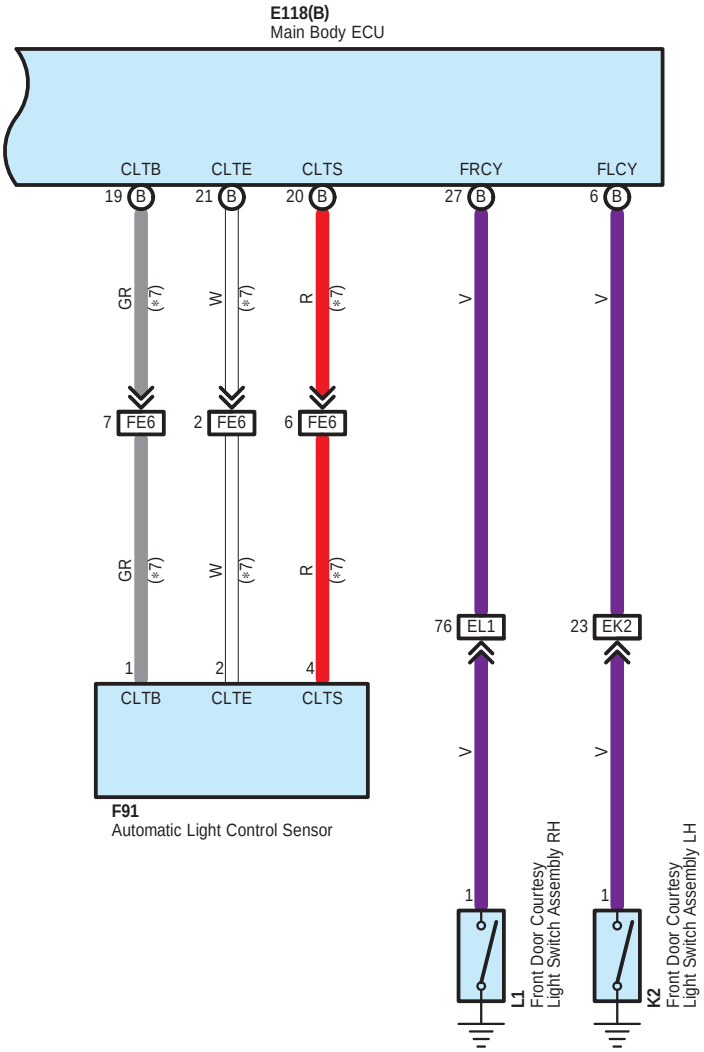

* 7 : w/ Automatic Light Control

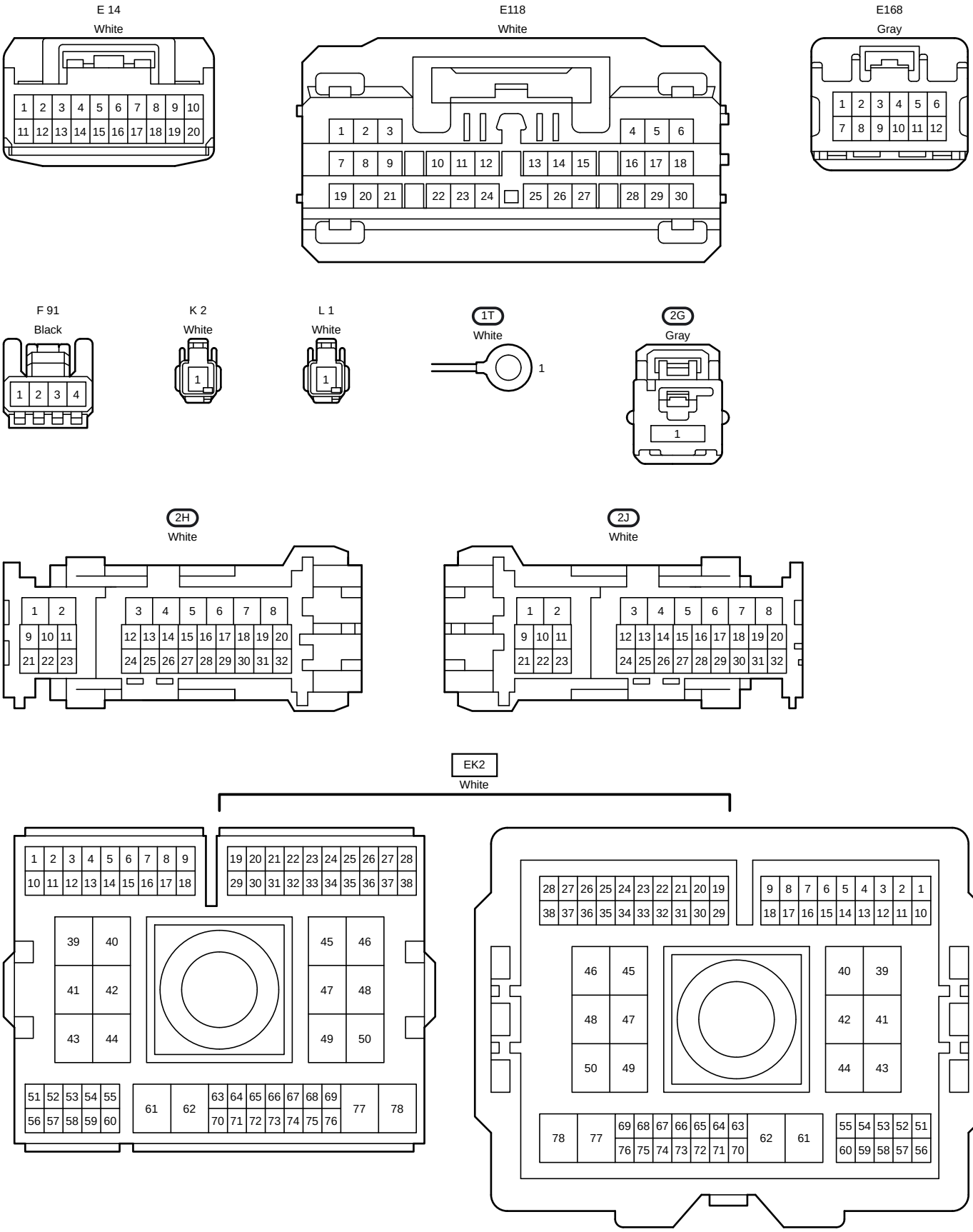
E 14
White
E118
White
E168
Gray
F 91
Black
K 2
White
L 1
White
1T
White
2G
Gray
2H
White
2J
White
EK2
White

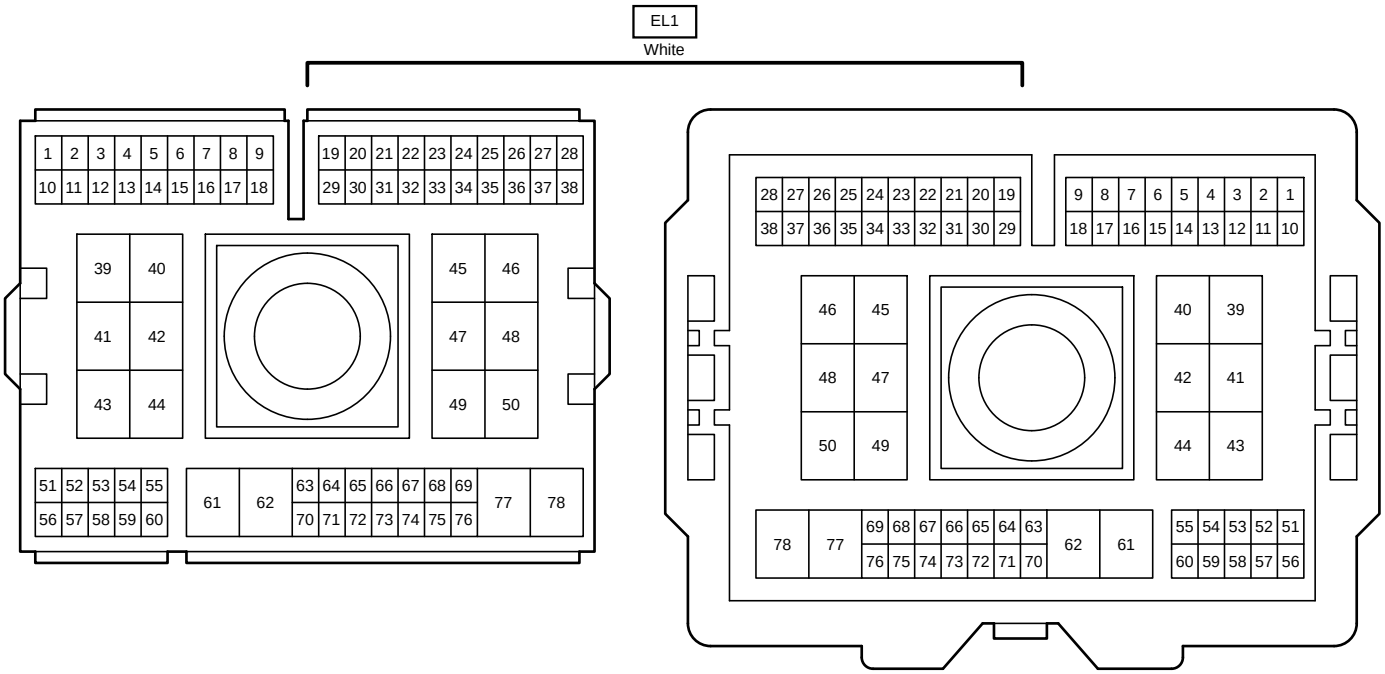
EL1
White
1 2 3 4 5 6 7 8 9
10 11 12 13 14 15 16 17 18
19 20 21 22 23 24 25 26 27 28
29 30 31 32 33 34 35 36 37 38
39 40
41 42
43 44
45 46
47 48
49 50
51 52 53 54 55
56 57 58 59 60
61 62
63 64 65 66 67 68 69
70 71 72 73 74 75 76
77 78
28 27 26 25 24 23 22 21 20 19
38 37 36 35 34 33 32 31 30 29
9 8 7 6 5 4 3 2 1
18 17 16 15 14 13 12 11 10
46 45
48 47
50 49
40 39
42 41
44 43
78 77
69 68 67 66 65 64 63
76 75 74 73 72 71 70
62 61
55 54 53 52 51
60 59 58 57 56

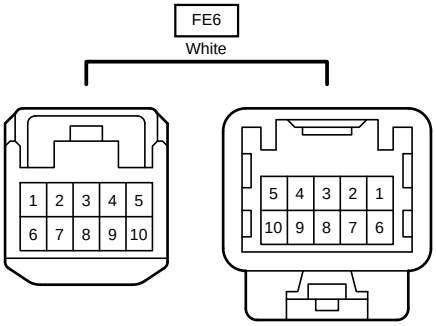
FE6
White
1 2 3 4 5
6 7 8 9 10
5 4 3 2 1
10 9 8 7 6