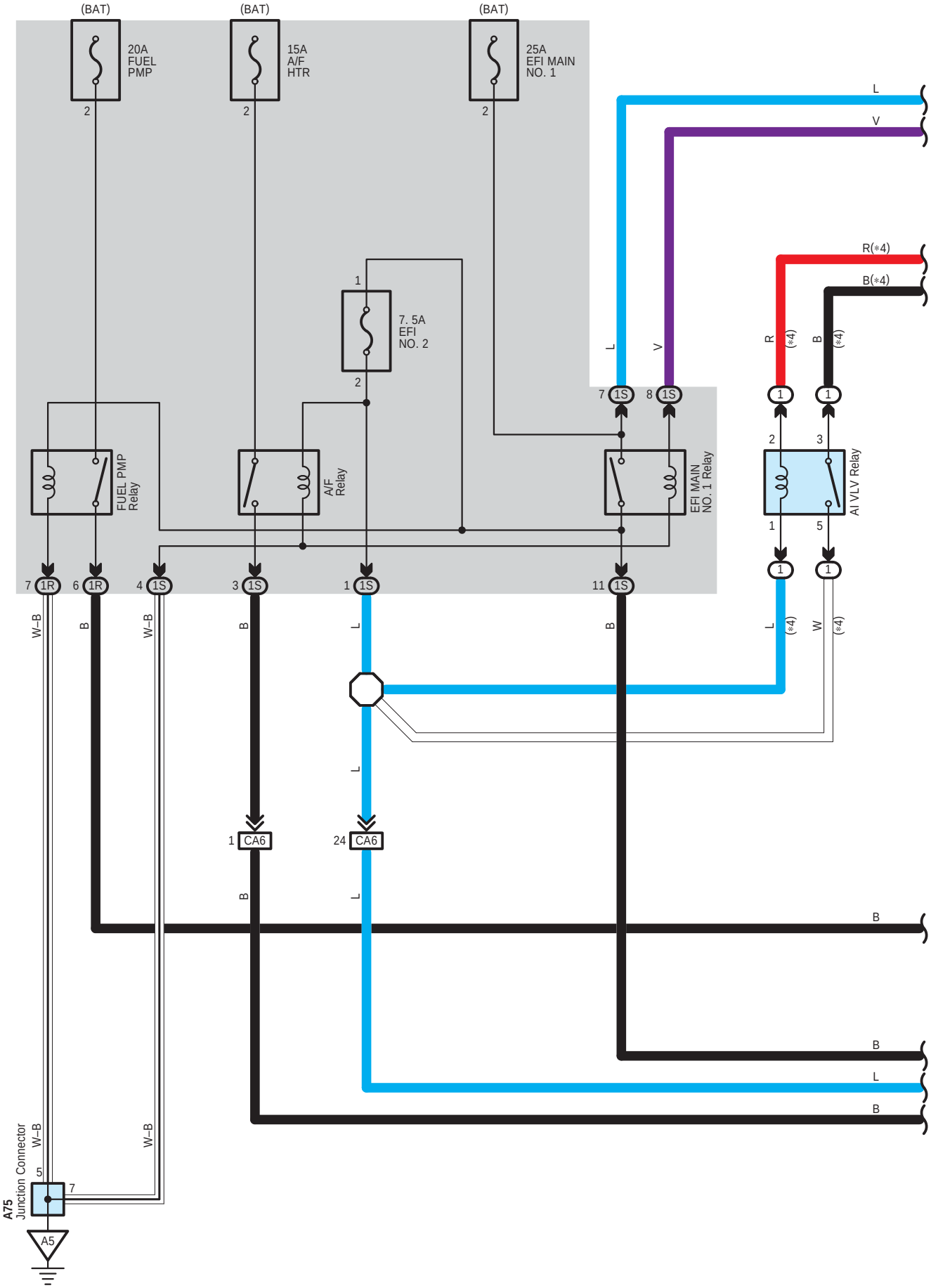
(BAT)
20A FUEL PMP
15A A/F HTR
25A EFI MAIN NO. 1
7. 5A EFI NO. 2
FUEL PMP Relay
A/F Relay
EFI MAIN NO. 1 Relay
AI VLV Relay
R(*4)
B(*4)
CA6
A75 Junction Connector
A5

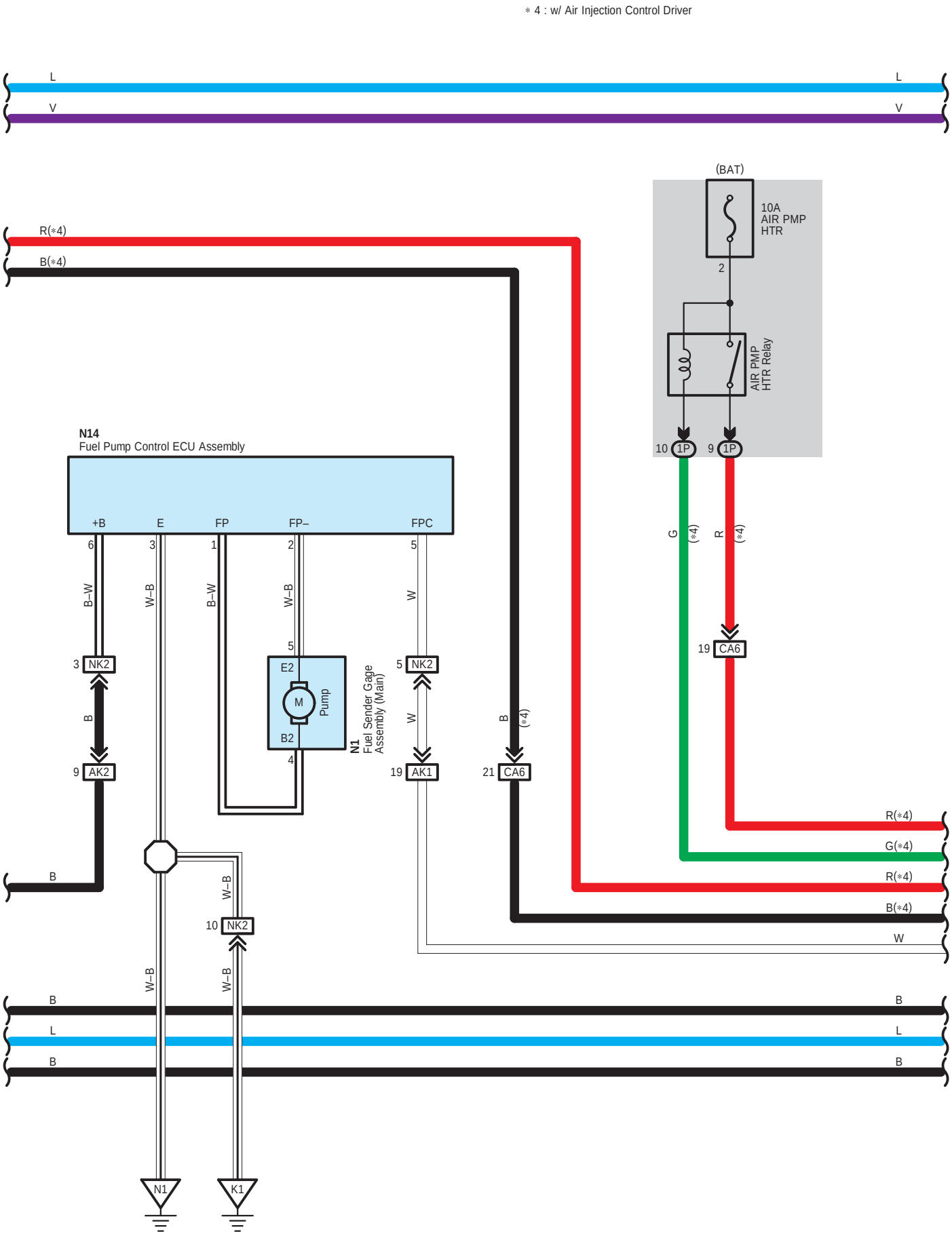
∗ 4 : w/ Air Injection Control Driver
L
V
(BAT)
10A
AIR PMP
HTR
2
AIR PMP
HTR Relay
10 1P
9 1P
R(∗4)
B(∗4)
N14
Fuel Pump Control ECU Assembly
+B
E
FP
FP–
FPC
6
3
1
2
5
B–W
W–B
B–W
W–B
W
G
(∗4)
R
(∗4)
19 CA6
3 NK2
5 NK2
E2
M
Pump
B2
N1
Fuel Sender Gage
Assembly (Main)
B
W
B
(∗4)
9 AK2
19 AK1
21 CA6
R(∗4)
G(∗4)
R(∗4)
B(∗4)
W
B
W–B
10 NK2
W–B
W–B
B
L
B
N1
K1

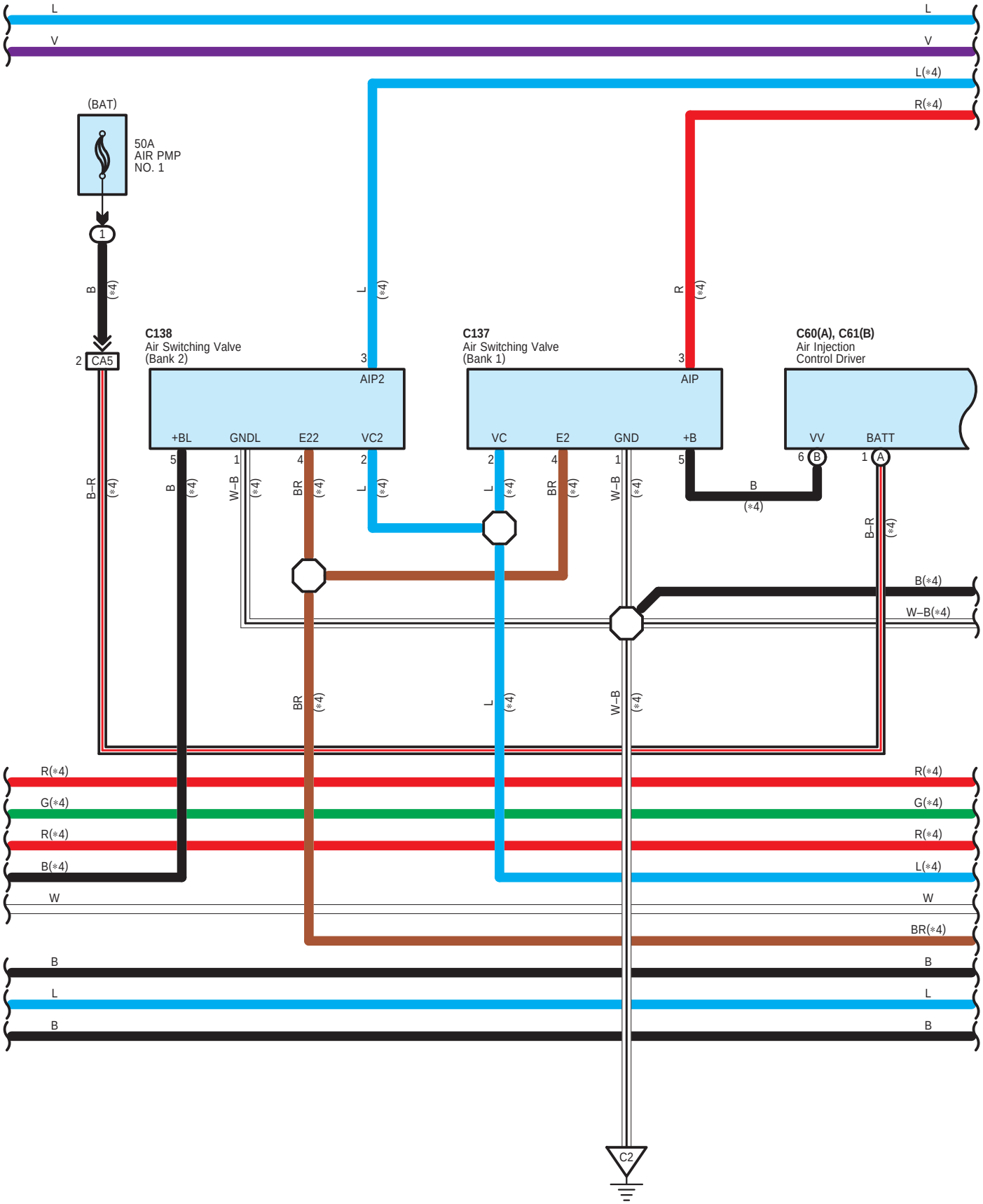
L
V
L(*4)
R(*4)
(BAT)
50A
AIR PMP
NO. 1
1
B
(*4)
2
CA5
C138
Air Switching Valve
(Bank 2)
3
AIP2
+BL
GNDL
E22
VC2
5
1
4
2
B–R
B
W–B
BR
L
C137
Air Switching Valve
(Bank 1)
AIP
VC
E2
GND
+B
R
C60(A), C61(B)
Air Injection
Control Driver
VV
BATT
6
B
1
A
B
B(*4)
W–B(*4)
R(*4)
G(*4)
R(*4)
B(*4)
W
L(*4)
BR(*4)
B
L
B
C2

∗ 4 : w/ Air Injection Control Driver

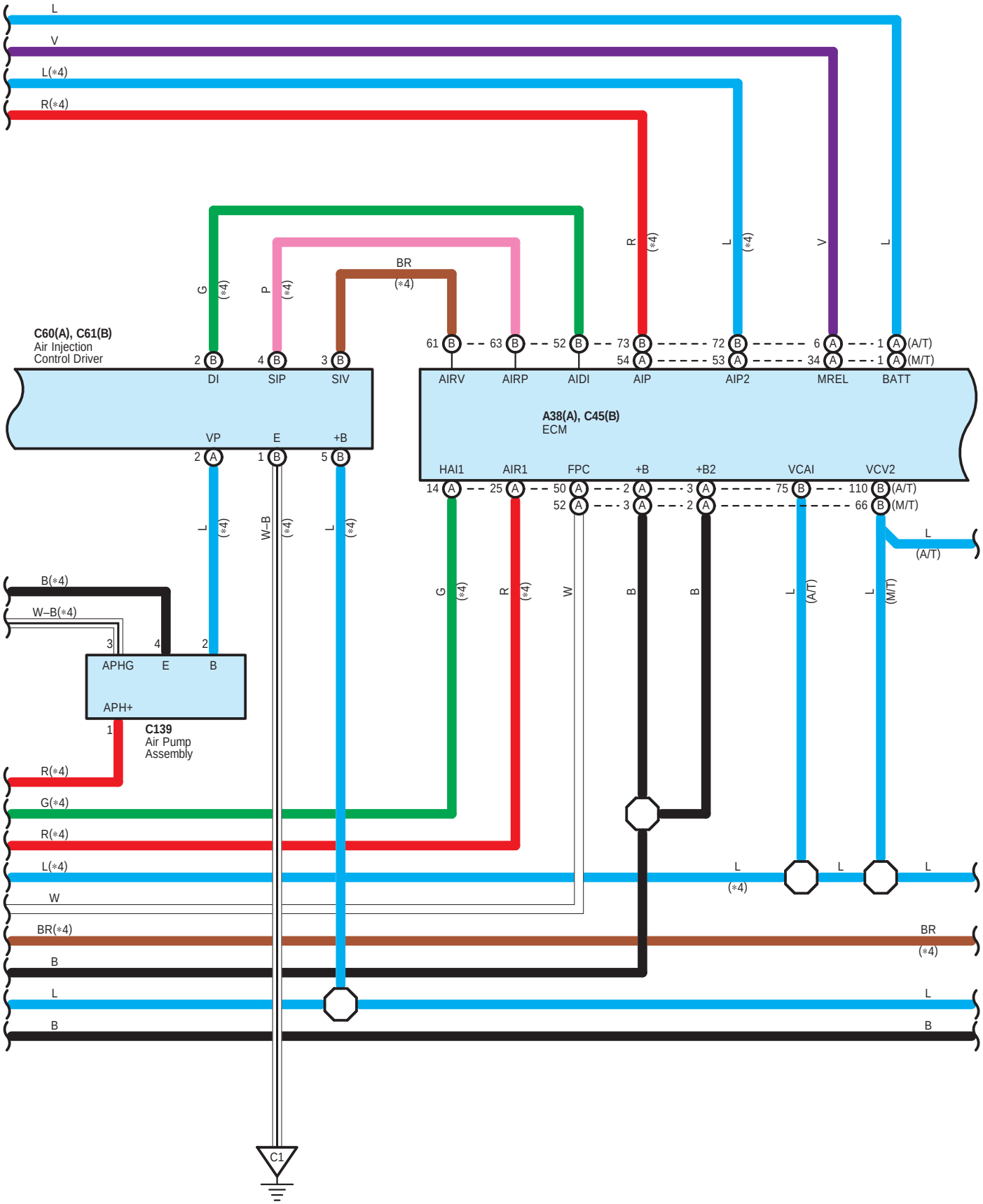

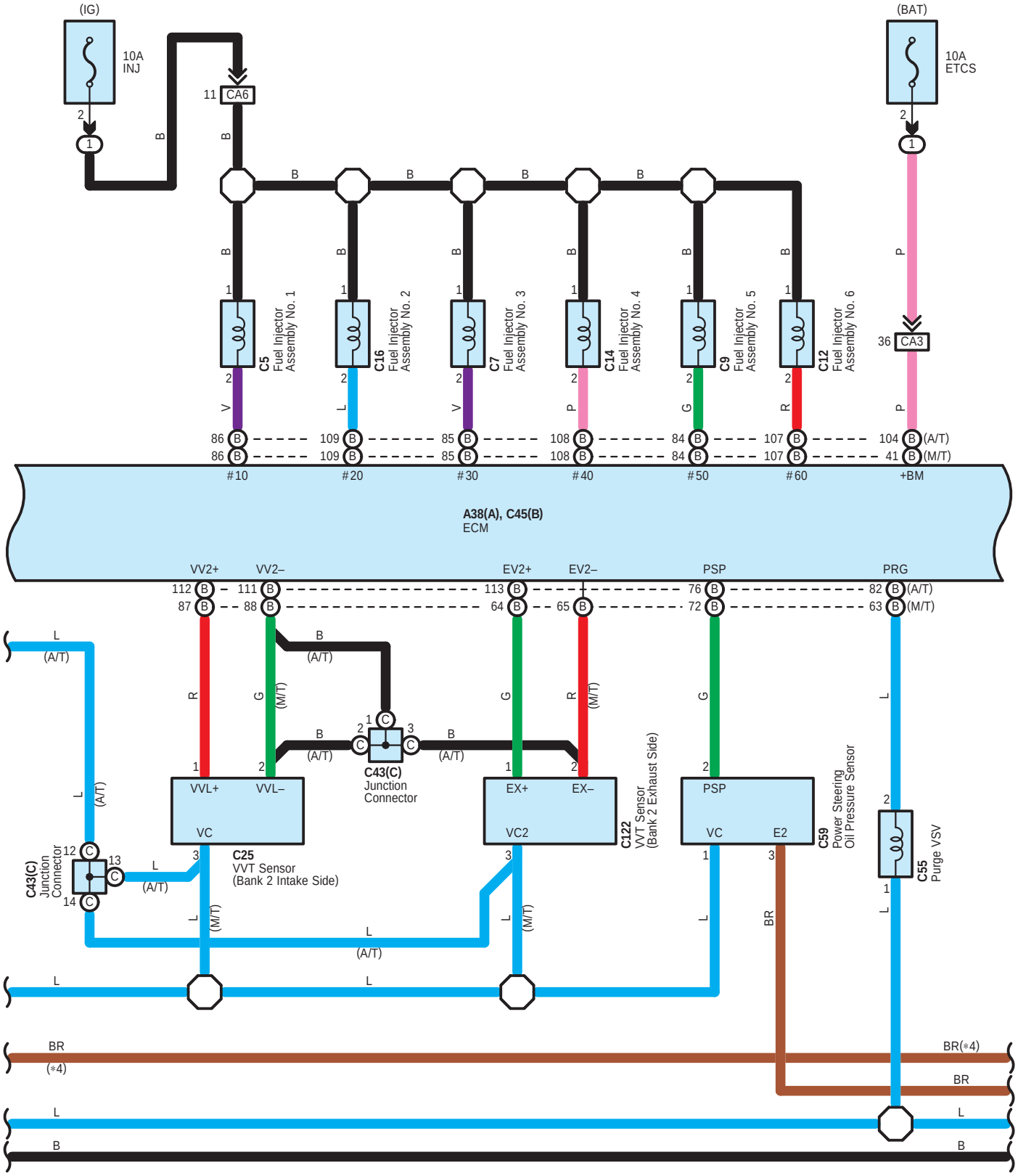
(IG)
10A
INJ
11 CA6
(BAT)
10A
ETCS
36 CA3
C5 Fuel Injector Assembly No. 1
C16 Fuel Injector Assembly No. 2
C7 Fuel Injector Assembly No. 3
C14 Fuel Injector Assembly No. 4
C9 Fuel Injector Assembly No. 5
C12 Fuel Injector Assembly No. 6
86 B #10
109 B #20
85 B #30
108 B #40
84 B #50
107 B #60
104 B (A/T)
41 B (M/T) +BM
A38(A), C45(B)
ECM
VV2+ 112 B 87 B
VV2– 111 B 88 B
EV2+ 113 B 64 B
EV2– 65 B
PSP 76 B 72 B
PRG 82 B (A/T) 63 B (M/T)
C43(C) Junction Connector
VVL+
VVL–
VC
C25 VVT Sensor (Bank 2 Intake Side)
EX+
EX–
VC2
C122 VVT Sensor (Bank 2 Exhaust Side)
PSP
VC
E2
C59 Power Steering Oil Pressure Sensor
C55 Purge VSV
BR (*4)
BR(*4)
BR
L
B

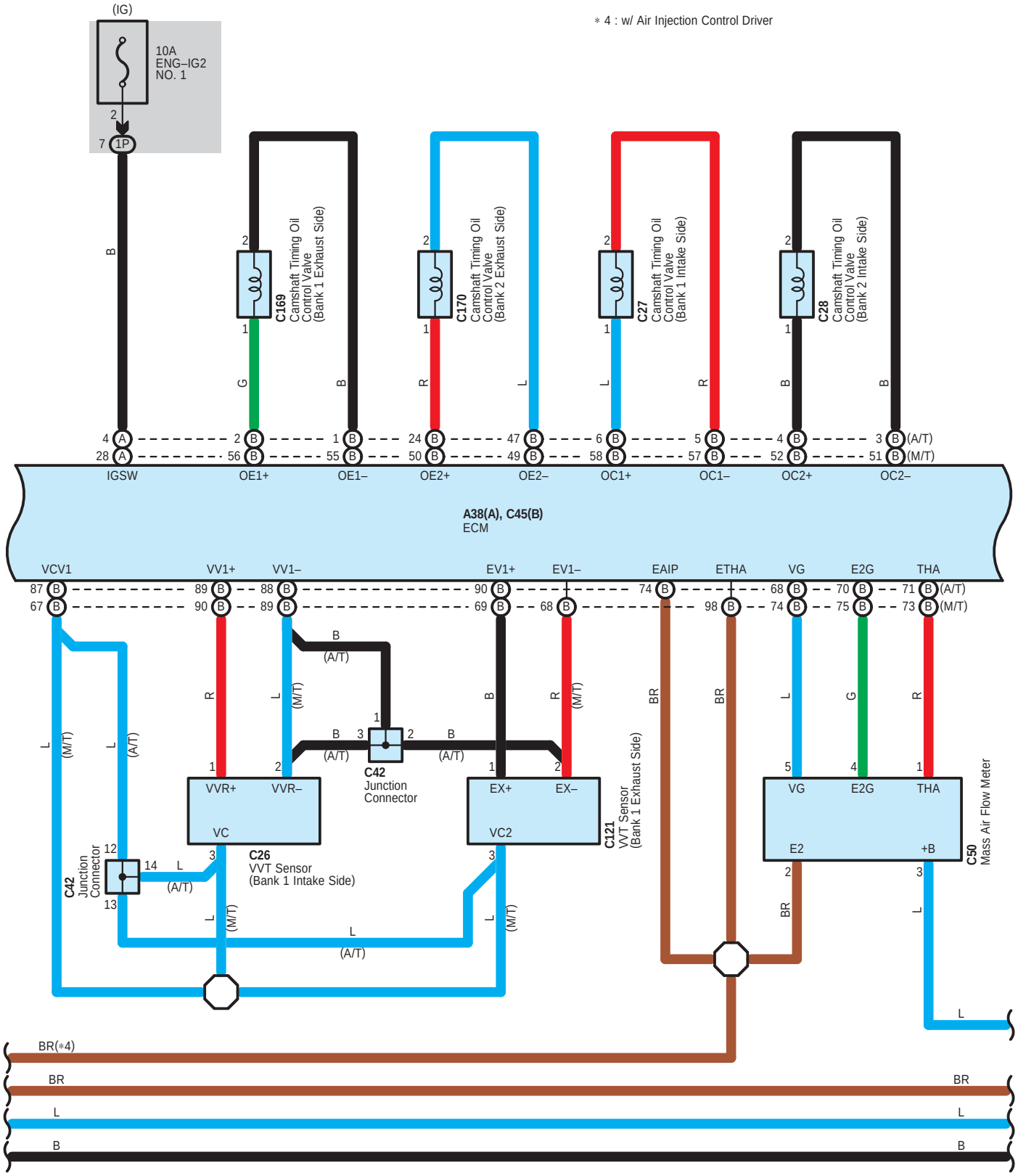
(IG)
10A
ENG–IG2
NO. 1
7 1P
∗ 4 : w/ Air Injection Control Driver
C169
Camshaft Timing Oil
Control Valve
(Bank 1 Exhaust Side)
C170
Camshaft Timing Oil
Control Valve
(Bank 2 Exhaust Side)
C27
Camshaft Timing Oil
Control Valve
(Bank 1 Intake Side)
C28
Camshaft Timing Oil
Control Valve
(Bank 2 Intake Side)
IGSW
OE1+
OE1–
OE2+
OE2–
OC1+
OC1–
OC2+
OC2–
A38(A), C45(B)
ECM
VCV1
VV1+
VV1–
EV1+
EV1–
EAIP
ETHA
VG
E2G
THA
C42
Junction
Connector
VVR+
VVR–
VC
C26
VVT Sensor
(Bank 1 Intake Side)
EX+
EX–
VC2
C121
VVT Sensor
(Bank 1 Exhaust Side)
E2
+B
C50
Mass Air Flow Meter
BR(∗4)

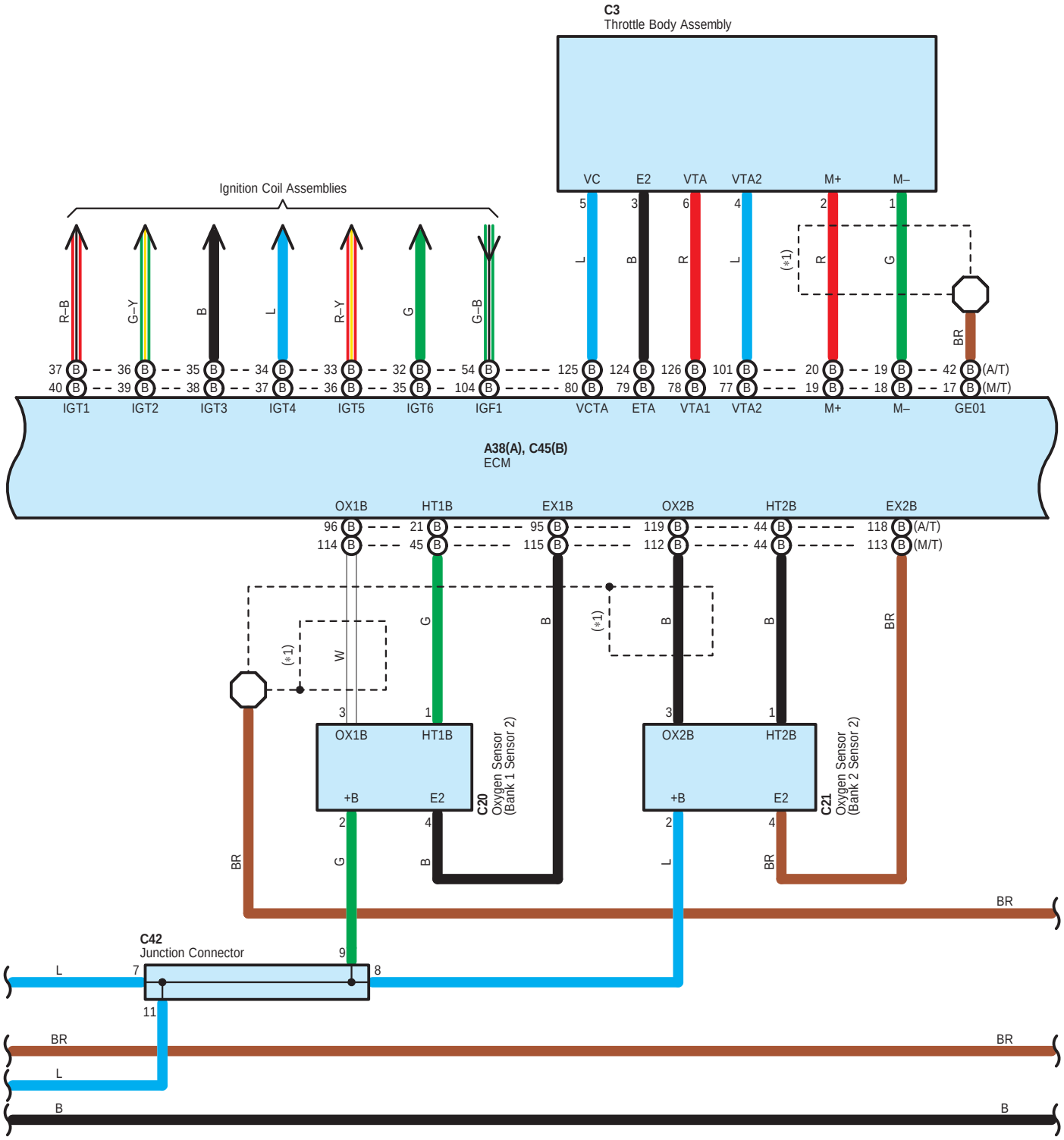
C3
Throttle Body Assembly
VC
E2
VTA
VTA2
M+
M–
Ignition Coil Assemblies
R–B
G–Y
B
L
R–Y
G
G–B
(*1)
BR
37 40 IGT1
36 39 IGT2
35 38 IGT3
34 37 IGT4
33 36 IGT5
32 35 IGT6
54 104 IGF1
125 80 VCTA
124 79 ETA
126 78 VTA1
101 77 VTA2
20 19 M+
19 18 M–
42 17 GE01
(A/T)
(M/T)
A38(A), C45(B)
ECM
OX1B
HT1B
EX1B
OX2B
HT2B
EX2B
96 114
21 45
95 115
119 112
44 44
118 113
W
C20
Oxygen Sensor
(Bank 1 Sensor 2)
C21
Oxygen Sensor
(Bank 2 Sensor 2)
+B
E2
C42
Junction Connector

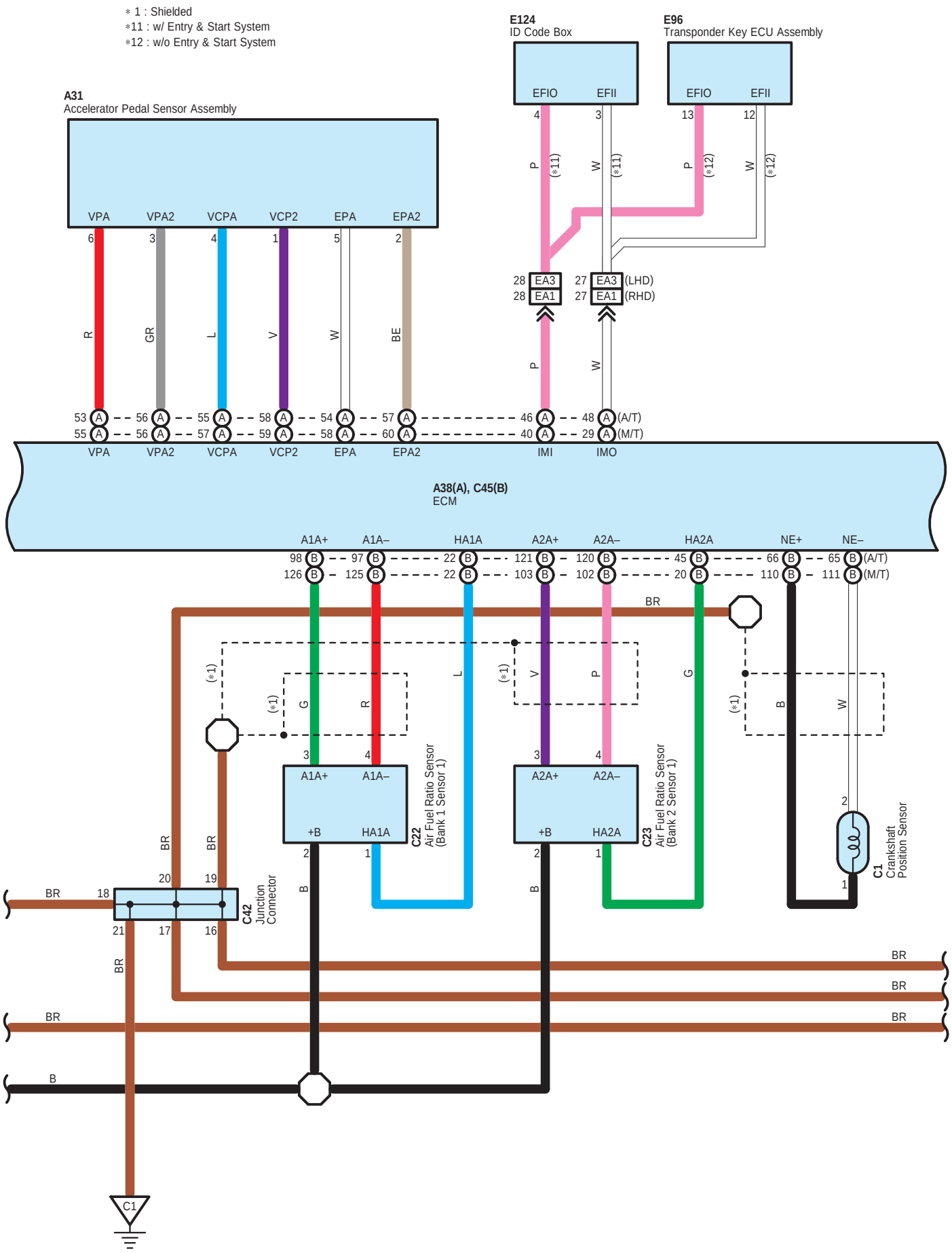
∗1 : Shielded
∗11 : w/ Entry & Start System
∗12 : w/o Entry & Start System
E124
ID Code Box
E96
Transponder Key ECU Assembly
EFIO
EFII
A31
Accelerator Pedal Sensor Assembly
VPA
VPA2
VCPA
VCP2
EPA
EPA2
EA3
EA1
(LHD)
(RHD)
IMI
IMO
(A/T)
(M/T)
A38(A), C45(B)
ECM
A1A+
A1A–
HA1A
A2A+
A2A–
HA2A
NE+
NE–
C22
Air Fuel Ratio Sensor (Bank 1 Sensor 1)
C23
Air Fuel Ratio Sensor (Bank 2 Sensor 1)
C1
Crankshaft Position Sensor
C42
Junction Connector
+B
BR
B
C1

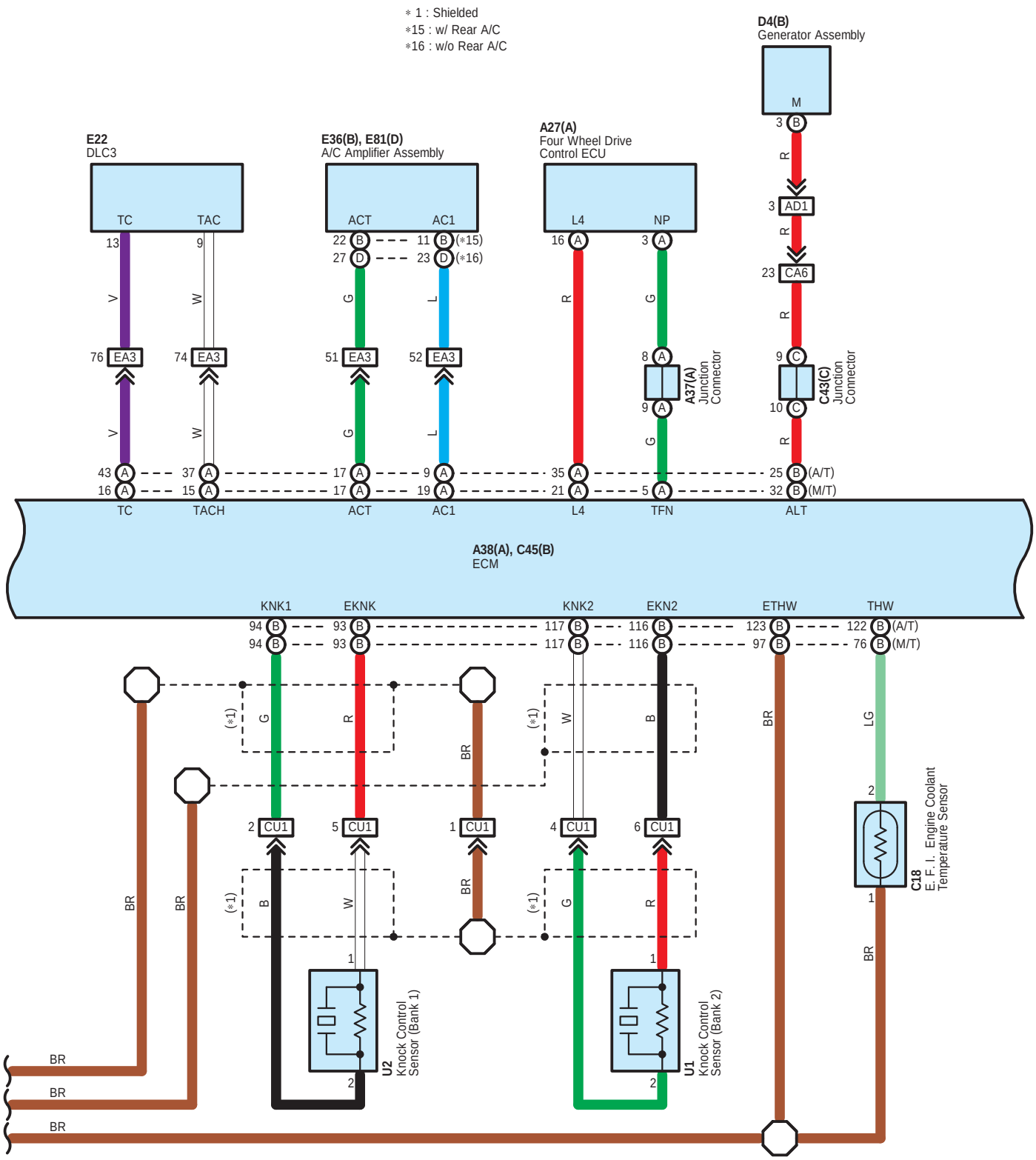
∗1 : Shielded
∗15 : w/ Rear A/C
∗16 : w/o Rear A/C
D4(B)
Generator Assembly
E22
DLC3
E36(B), E81(D)
A/C Amplifier Assembly
A27(A)
Four Wheel Drive Control ECU
A37(A)
Junction Connector
C43(C)
Junction Connector
A38(A), C45(B)
ECM
C18
E. F. I. Engine Coolant Temperature Sensor
U2
Knock Control Sensor (Bank 1)
U1
Knock Control Sensor (Bank 2)
TC
TAC
ACT
AC1
L4
NP
M
AD1
CA6
EA3
TACH
TFN
ALT
KNK1
EKNK
KNK2
EKN2
ETHW
THW
CU1
(A/T)
(M/T)

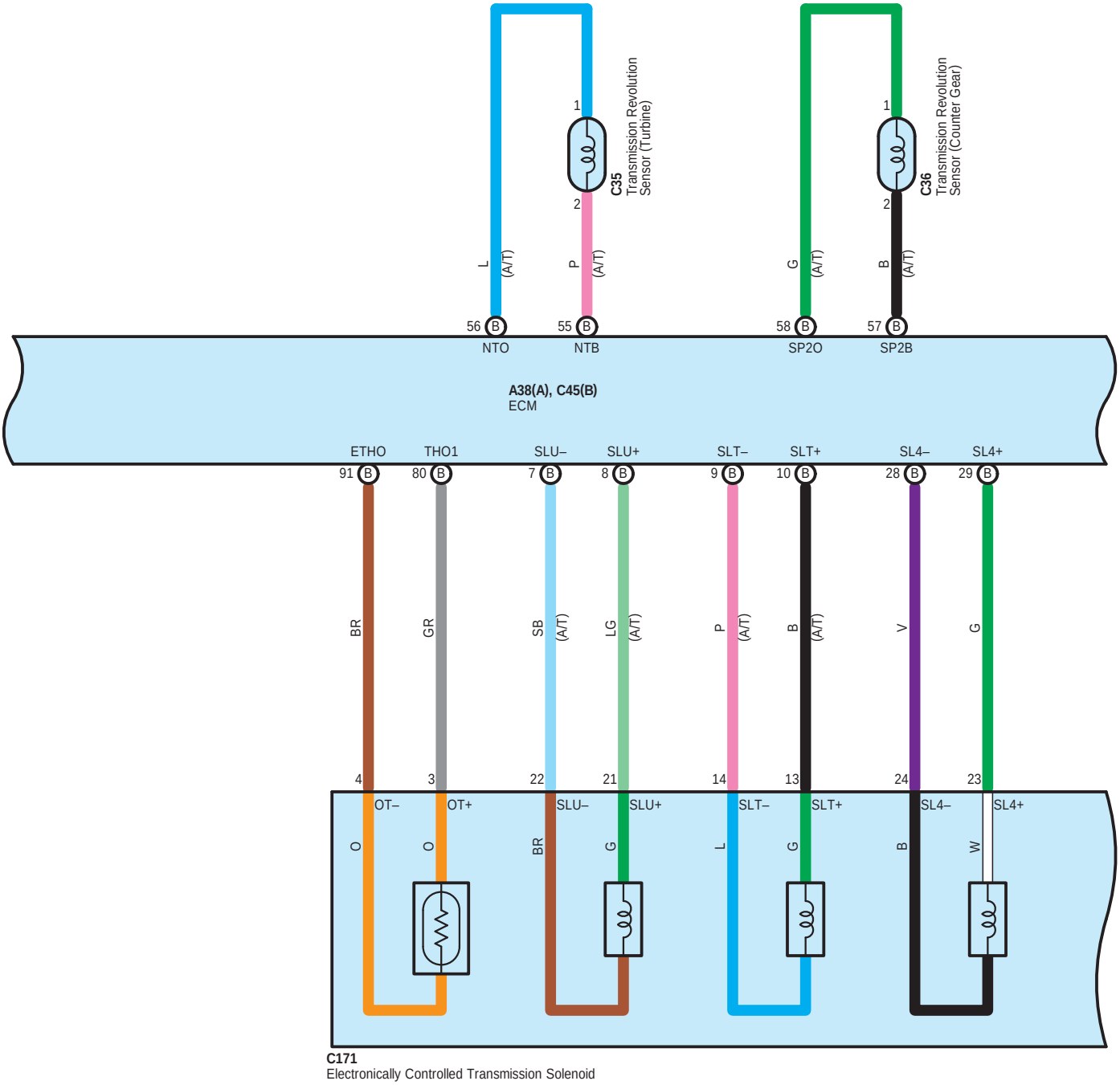
C35
Transmission Revolution Sensor (Turbine)
C36
Transmission Revolution Sensor (Counter Gear)
L (A/T)
P (A/T)
G (A/T)
B (A/T)
56 B NTO
55 B NTB
58 B SP2O
57 B SP2B
A38(A), C45(B)
ECM
ETHO
THO1
SLU–
SLU+
SLT–
SLT+
SL4–
SL4+
91 B
80 B
7 B
8 B
9 B
10 B
28 B
29 B
BR
GR
SB (A/T)
LG (A/T)
P (A/T)
B (A/T)
V
G
4
3
22
21
14
13
24
23
OT–
OT+
SLU–
SLU+
SLT–
SLT+
SL4–
SL4+
O
O
BR
G
L
G
B
W
C171
Electronically Controlled Transmission Solenoid

*11 : w/ Entry & Start System
*12 : w/o Entry & Start System

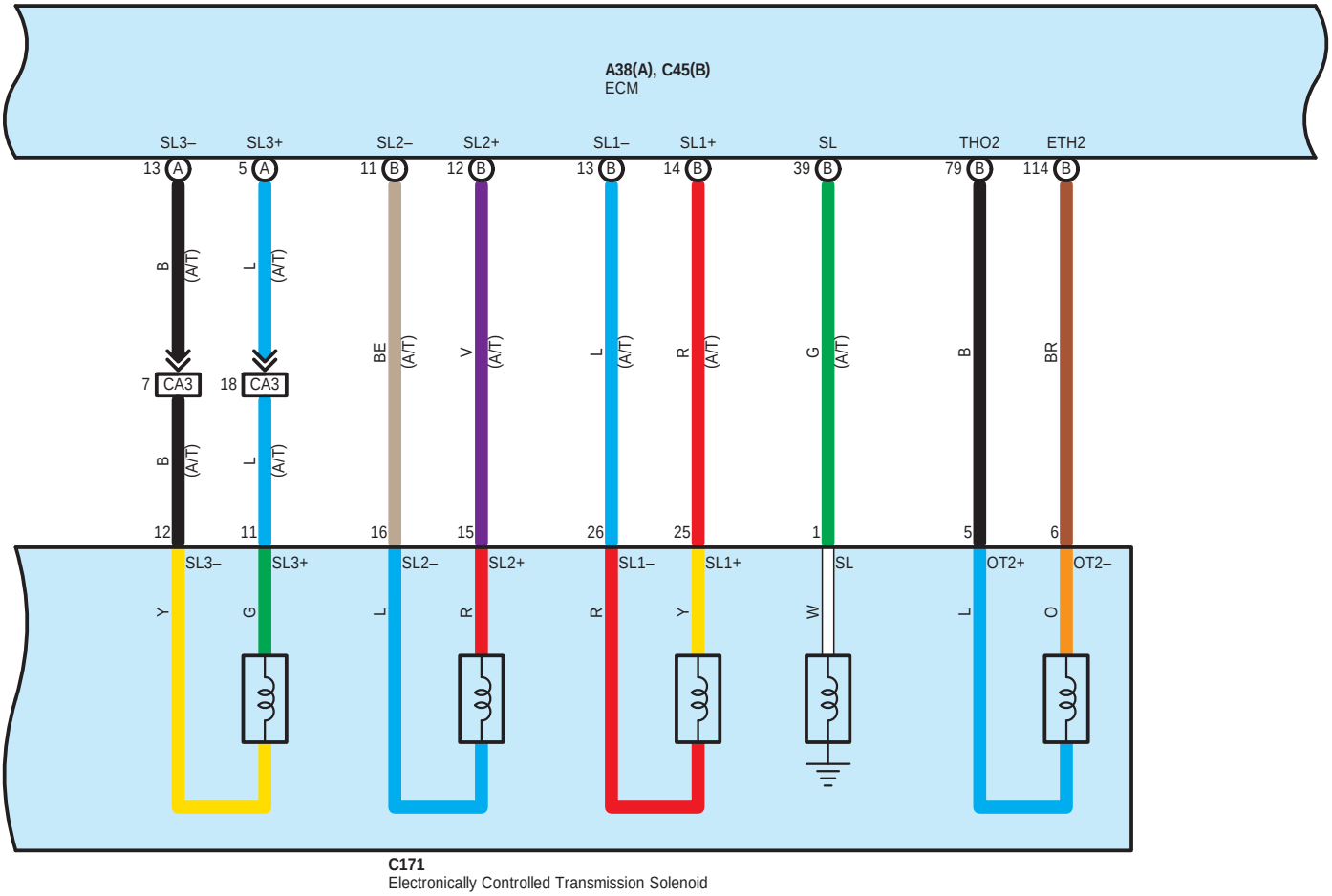

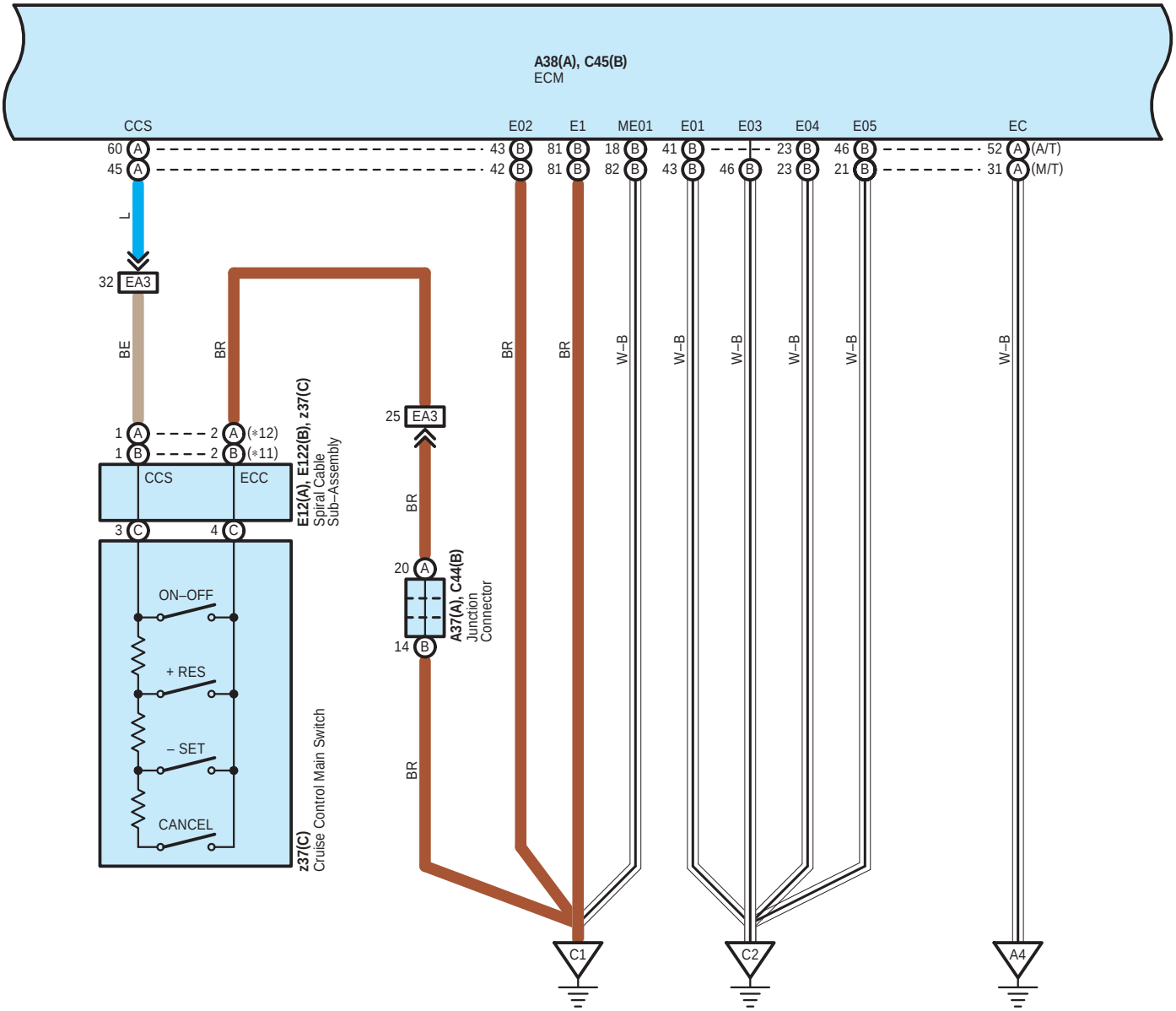
A38(A), C45(B)
ECM
CCS
E02
E1
ME01
E01
E03
E04
E05
EC
60 A
45 A
43 B
42 B
81 B
81 B
18 B
82 B
41 B
43 B
46 B
23 B
23 B
46 B
21 B
52 A (A/T)
31 A (M/T)
L
32 EA3
BE
BR
BR
BR
W–B
W–B
W–B
W–B
W–B
W–B
1 A
1 B
2 A (*12)
2 B (*11)
CCS
ECC
E12(A), E122(B), z37(C)
Spiral Cable
Sub–Assembly
3 C
4 C
ON–OFF
+ RES
– SET
CANCEL
z37(C)
Cruise Control Main Switch
25 EA3
BR
20 A
14 B
A37(A), C44(B)
Junction
Connector
BR
C1
C2
A4

*11 : w/ Entry & Start System
*13 : Liftgate Type
*14 : Swing Type

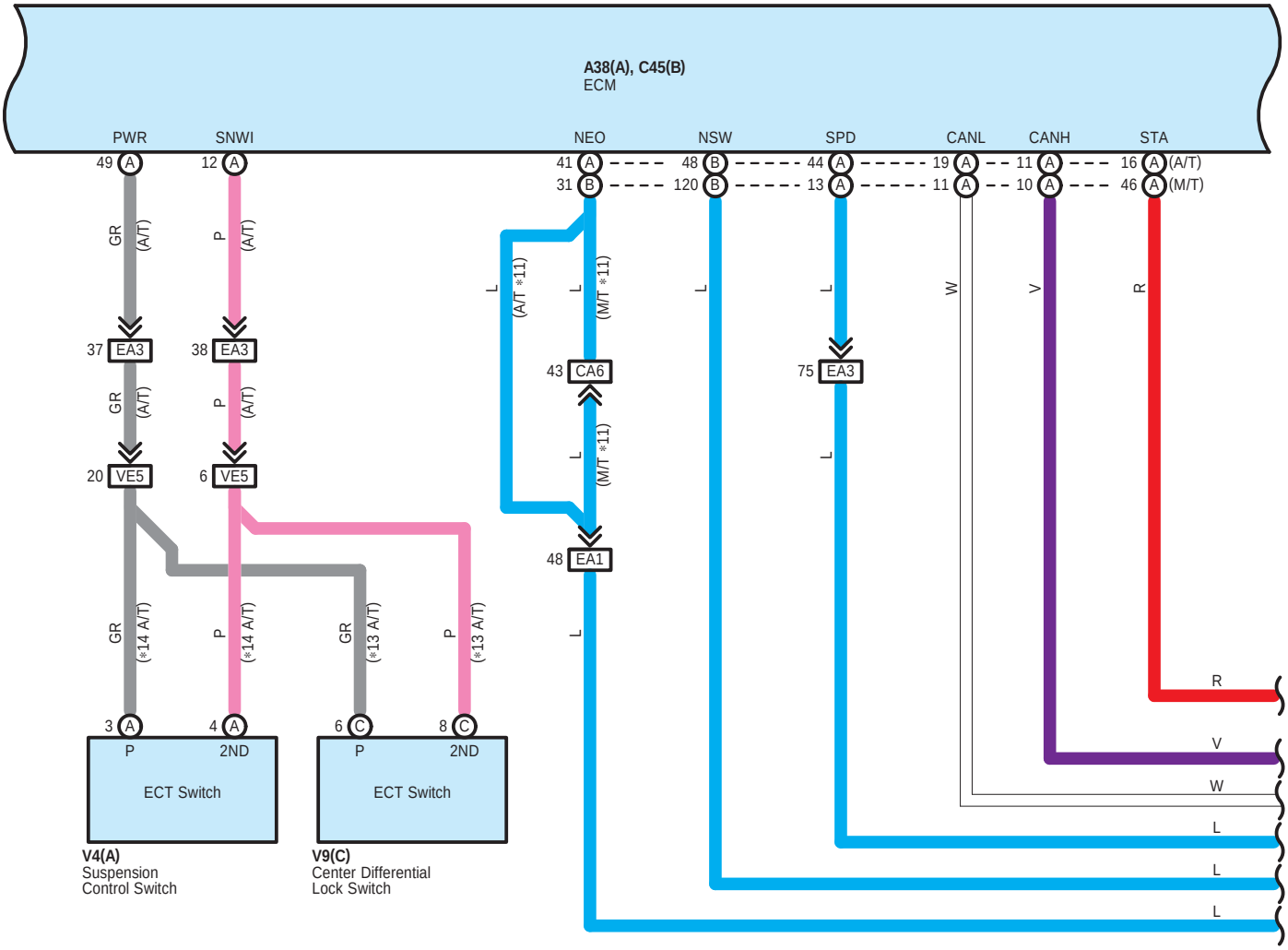

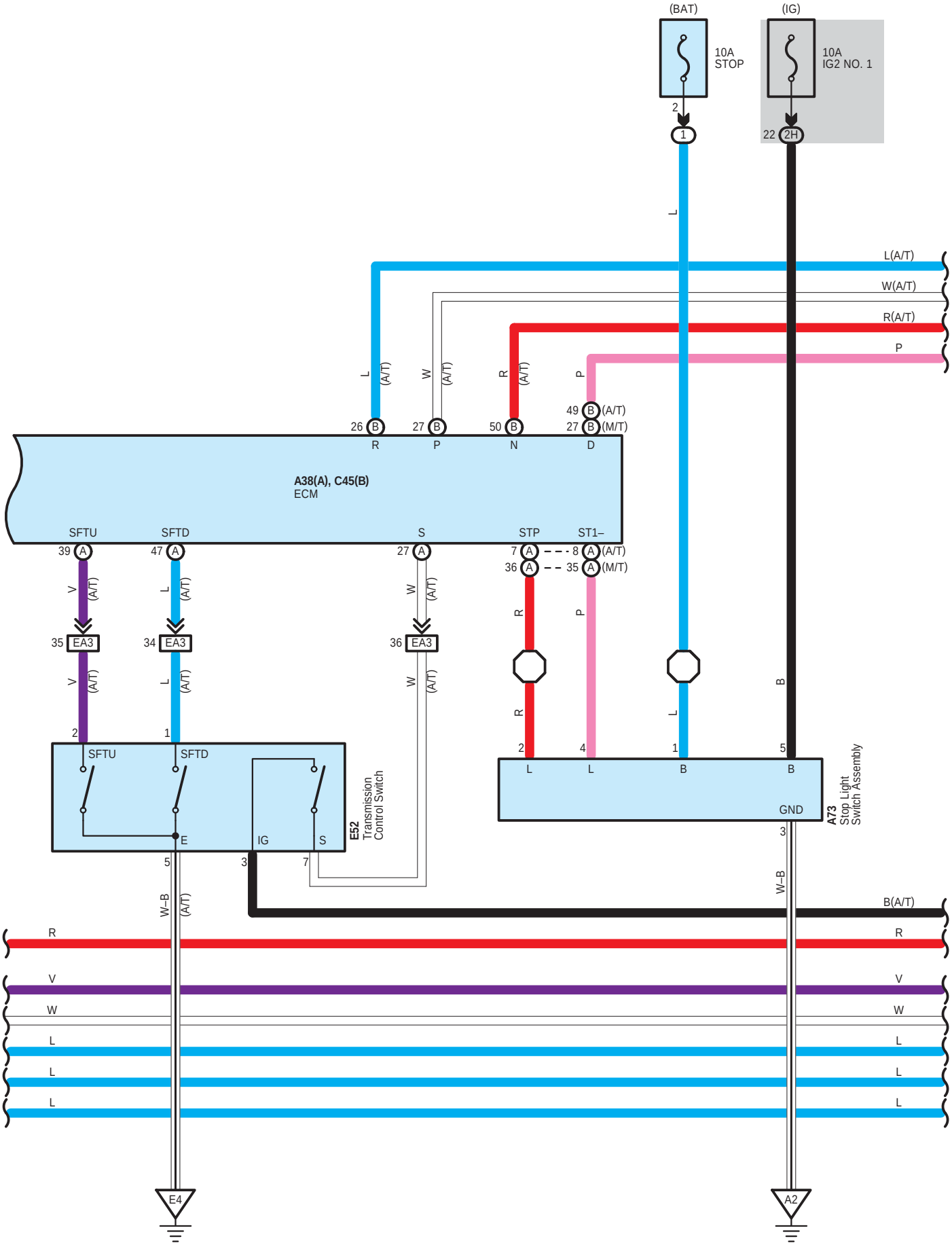
(BAT)
(IG)
10A
STOP
10A
IG2 NO. 1
2
1
22
2H
L
L(A/T)
W(A/T)
R(A/T)
P
L (A/T)
W (A/T)
R (A/T)
P
26 B
27 B
50 B
49 B (A/T)
27 B (M/T)
R
P
N
D
A38(A), C45(B)
ECM
SFTU
SFTD
S
STP
ST1–
39 A
47 A
27 A
7 A
8 A (A/T)
36 A
35 A (M/T)
V (A/T)
L (A/T)
W (A/T)
R
P
35 EA3
34 EA3
36 EA3
V (A/T)
L (A/T)
W (A/T)
R
L
B
2
1
4
1
5
SFTU
SFTD
E
IG
S
E52
Transmission
Control Switch
L
L
B
B
GND
A73
Stop Light
Switch Assembly
5
3
7
3
W–B
W–B (A/T)
B(A/T)
R
R
V
V
W
W
L
L
L
L
L
L
E4
A2

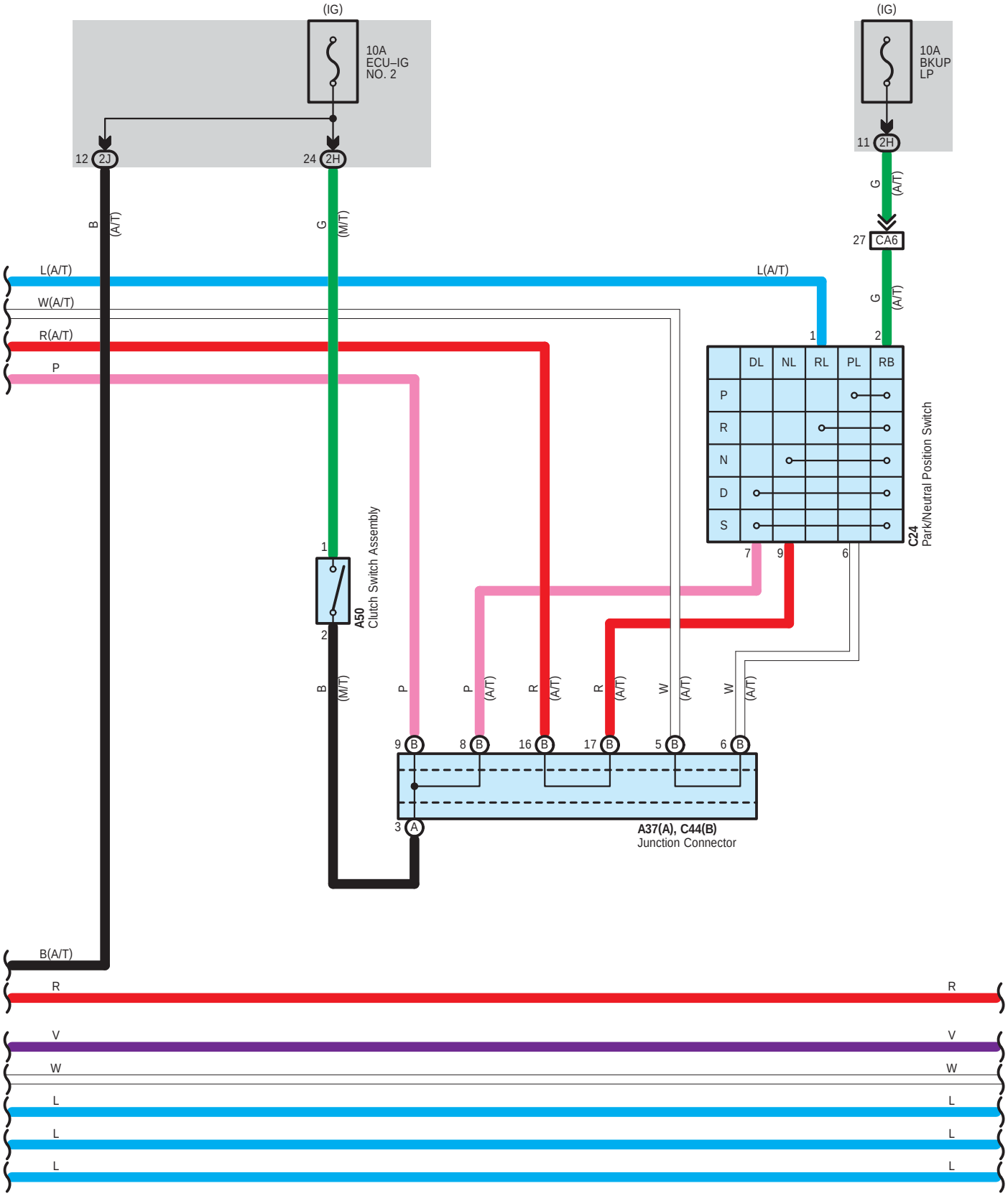
(IG)
10A
ECU–IG
NO. 2
12 2J
24 2H
B (A/T)
G (M/T)
(IG)
10A
BKUP
LP
11 2H
G (A/T)
27 CA6
G (A/T)
L(A/T)
W(A/T)
R(A/T)
P
L(A/T)
1
2
DL NL RL PL RB
P
R
N
D
S
7 9 6
C24
Park/Neutral Position Switch
1
2
A50
Clutch Switch Assembly
B (M/T)
P
P (A/T)
R (A/T)
R (A/T)
W (A/T)
W (A/T)
9 B
8 B
16 B
17 B
5 B
6 B
3 A
A37(A), C44(B)
Junction Connector
B(A/T)
R
R
V
V
W
W
L
L
L
L
L
L

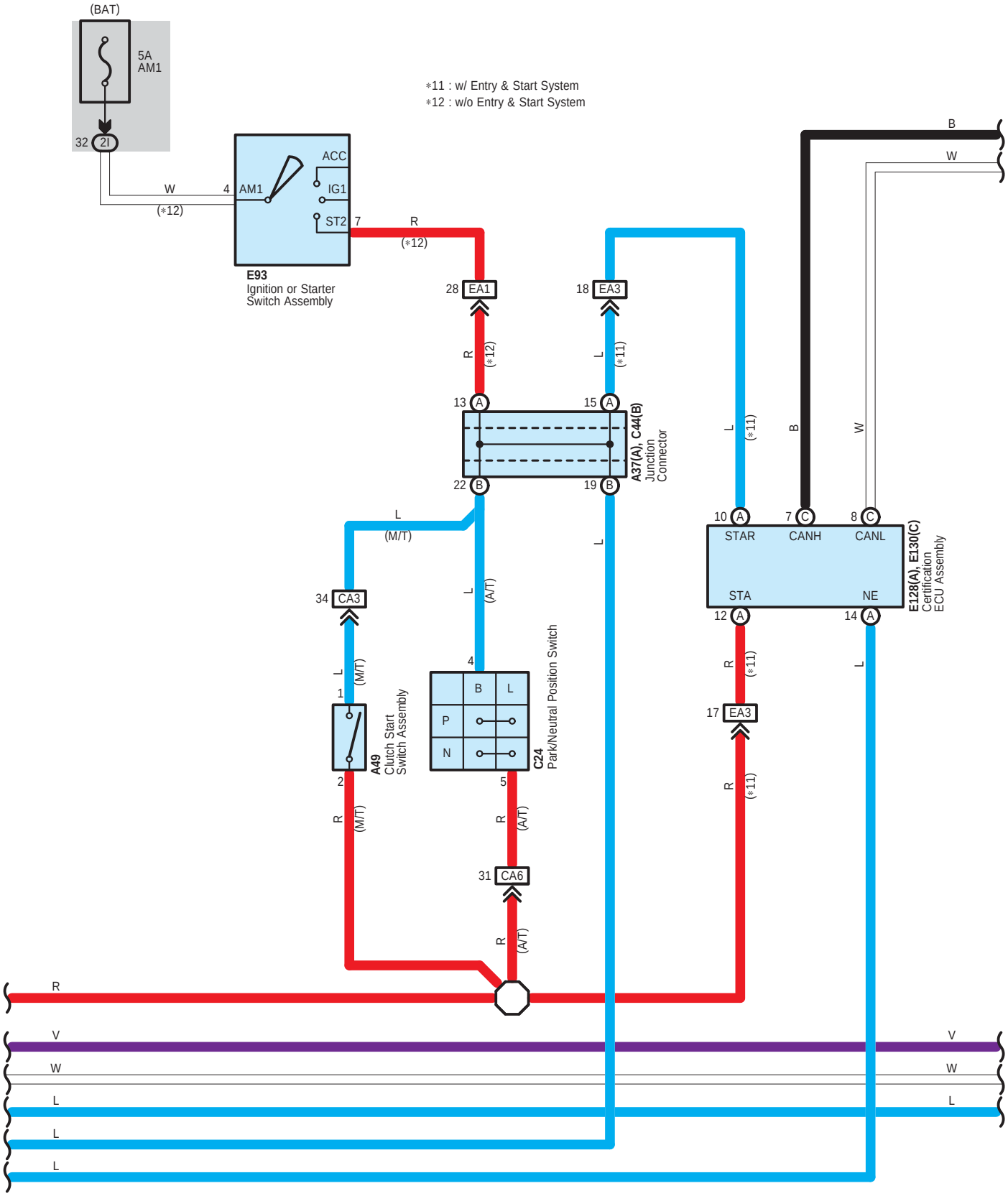
(BAT)
5A
AM1
32
2I
W
(*12)
4
AM1
ACC
IG1
ST2
7
R
(*12)
E93
Ignition or Starter
Switch Assembly
*11 : w/ Entry & Start System
*12 : w/o Entry & Start System
28
EA1
18
EA3
R
(*12)
L
(*11)
13
A
15
A
22
B
19
B
A37(A), C44(B)
Junction
Connector
L
(M/T)
L
(A/T)
L
(*11)
B
W
10
A
7
C
8
C
STAR
CANH
CANL
STA
NE
12
A
14
A
E128(A), E130(C)
Certification
ECU Assembly
34
CA3
L
(M/T)
1
2
R
(M/T)
A49
Clutch Start
Switch Assembly
4
B
L
P
N
5
C24
Park/Neutral Position Switch
R
(A/T)
31
CA6
R
(A/T)
R
(*11)
17
EA3
R
(*11)
R
V
W
L
L
L
V
W
L

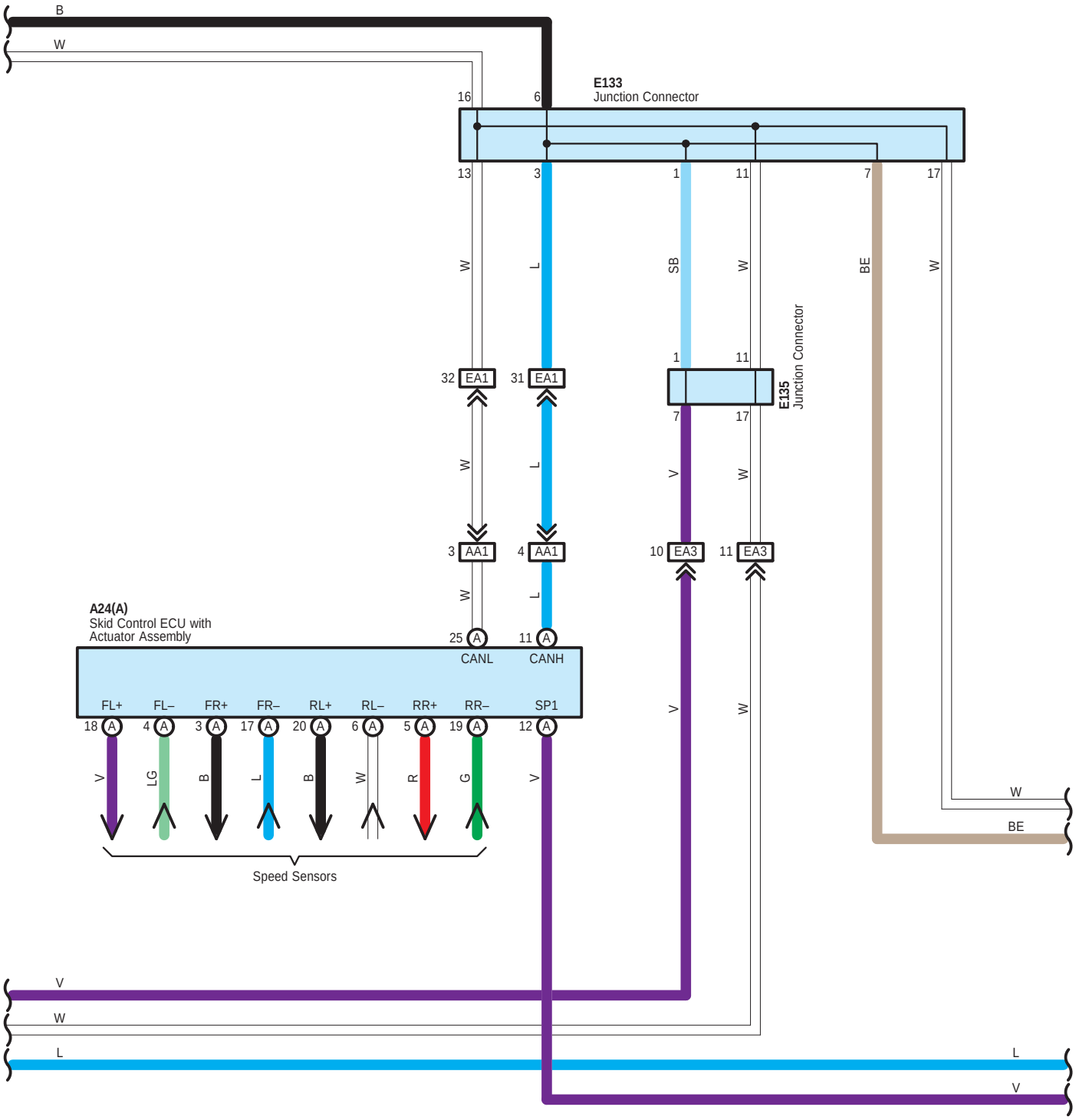
B
W
E133
Junction Connector
16
6
13
3
1
11
7
17
W
L
SB
W
BE
W
E135
Junction Connector
1
11
7
17
32 EA1
31 EA1
W
L
V
W
3 AA1
4 AA1
10 EA3
11 EA3
W
L
A24(A)
Skid Control ECU with
Actuator Assembly
25 A
11 A
CANL
CANH
FL+
FL–
FR+
FR–
RL+
RL–
RR+
RR–
SP1
18 A
4 A
3 A
17 A
20 A
6 A
5 A
19 A
12 A
V
LG
B
L
B
W
R
G
V
V
W
W
BE
Speed Sensors
V
W
L
L
V

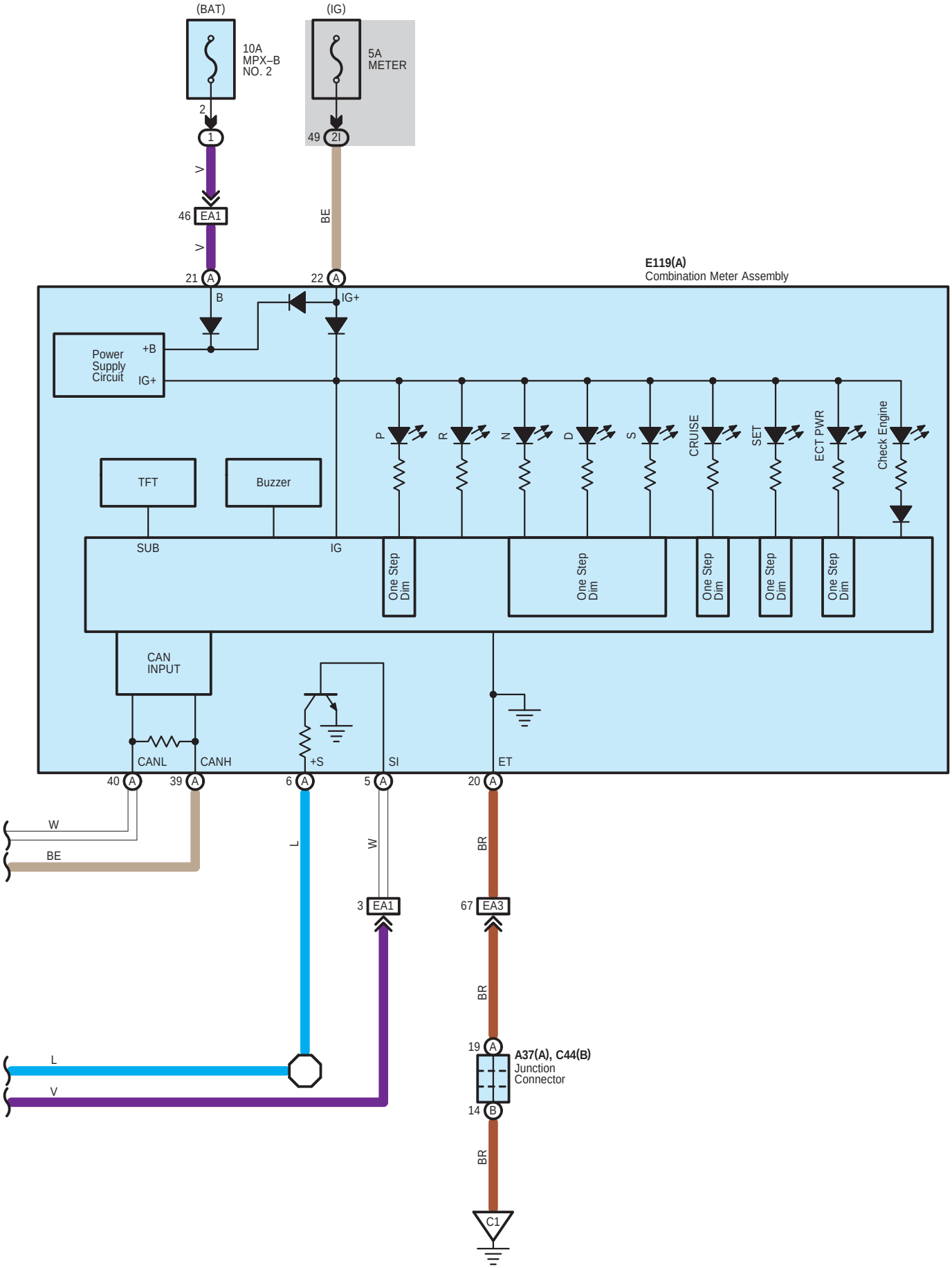
(BAT)
(IG)
10A
MPX–B
NO. 2
5A
METER
2
1
49
2I
V
46
EA1
V
BE
21
A
22
A
E119(A)
Combination Meter Assembly
B
IG+
Power
Supply
Circuit
+B
IG+
P
R
N
D
S
CRUISE
SET
ECT PWR
Check Engine
TFT
Buzzer
SUB
IG
One Step
Dim
One Step
Dim
One Step
Dim
One Step
Dim
One Step
Dim
CAN
INPUT
CANL
CANH
+S
SI
ET
40
A
39
A
6
A
5
A
20
A
W
BE
L
W
BR
3
EA1
67
EA3
BR
19
A
A37(A), C44(B)
Junction
Connector
14
B
L
V
BR
C1

A 24
Black

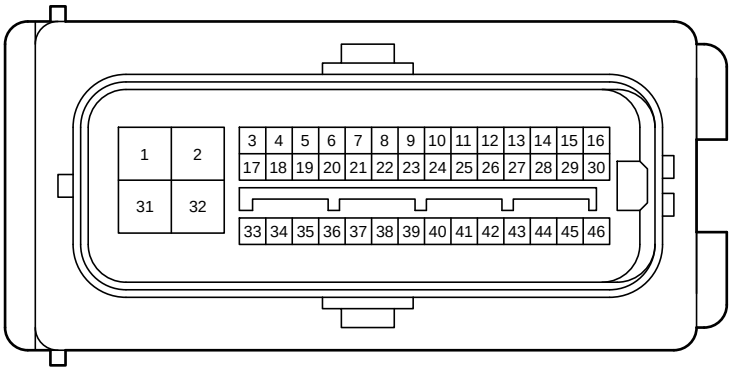

A 27
Black

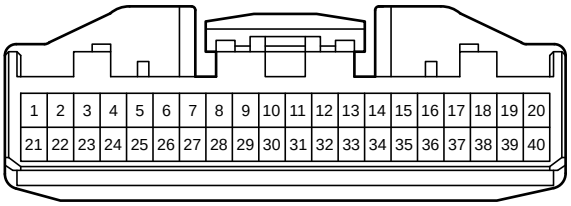

A 31
Black

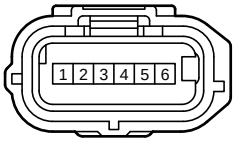

A 37
Blue

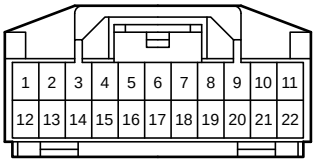

A 38
Black

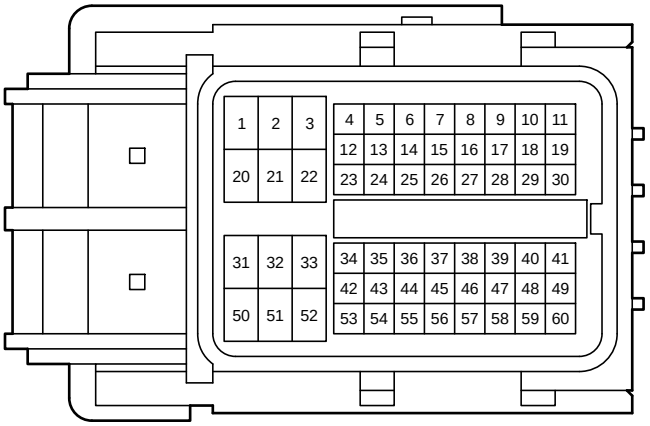

A 49
Black

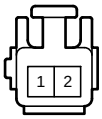

A 50
White

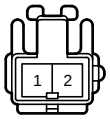

A 73
Gray

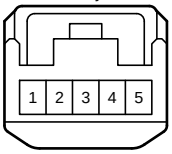

A 75
Black

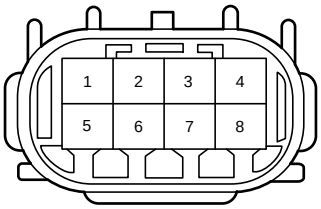

C 1
Black

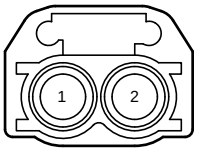

C 3
Black

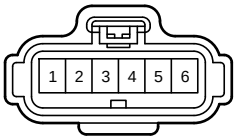

C 5
Gray

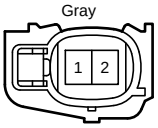

C 7
Gray

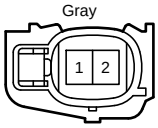

C 9
Gray

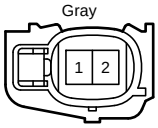

C 12
Gray

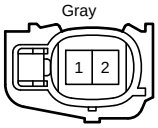

C 14
Gray

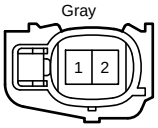

C 16
Gray

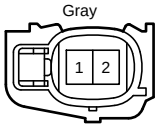

C 18
Dark Gray

C 20
Dark Gray

C 21
Dark Gray

C 22
Dark Gray

C 23
Dark Gray

C 24
Gray

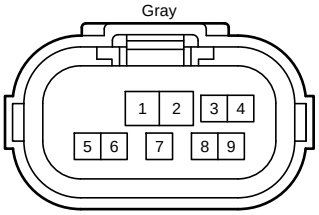

C 25
Black

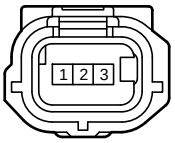

C 26
Black

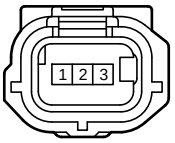

C 27
Black

C 28
Black

C 35
Black

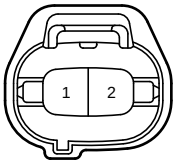

C 36
Black

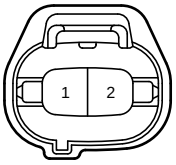

C 42
White

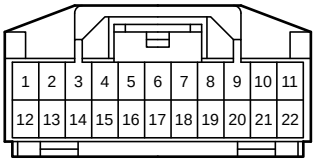

C 43
White

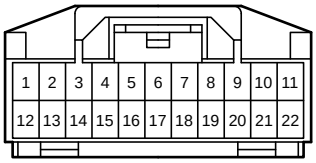

C 44
Blue

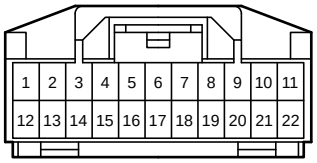

C 45
Black

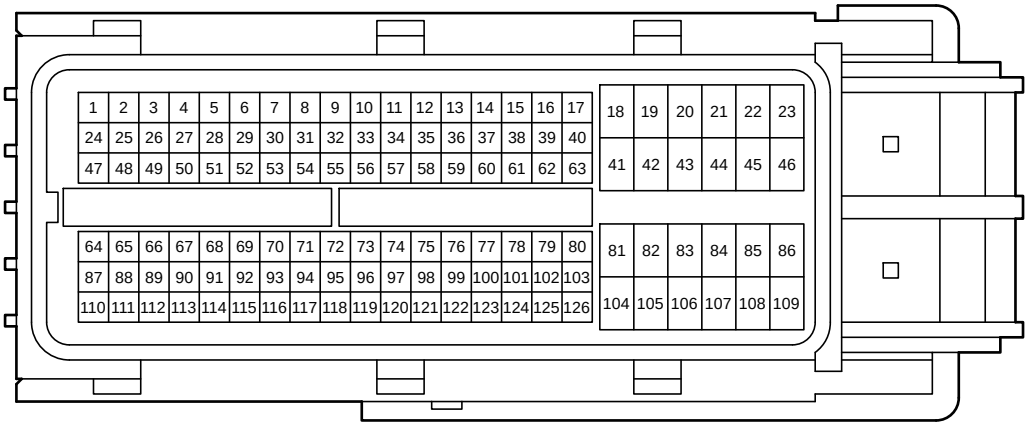

C 50
Black

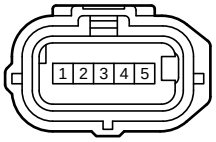

C 55
Black

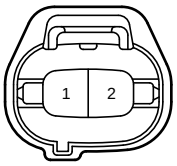

C 59
Gray

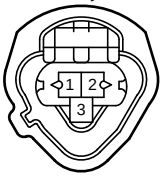

C 60
Black

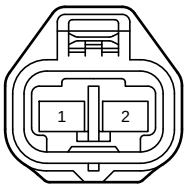

C 61
Black

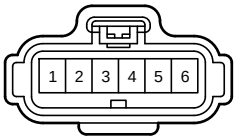

C121
Black

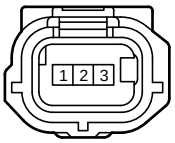

C122
Black

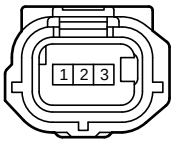

C137
Black

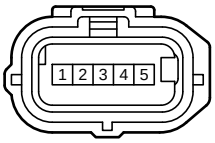

C138
Black

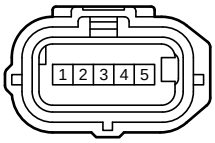

C139
Black

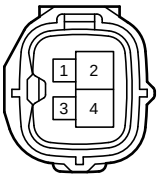

C169
Gray

C170
Gray

C171
Gray

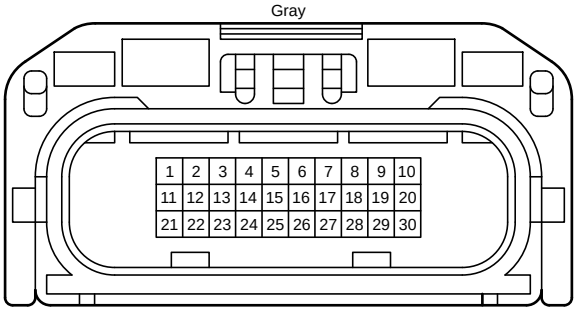

D 4
Black

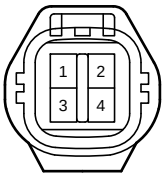

E 12
Black

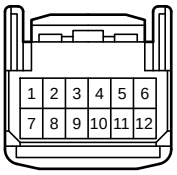

E 22
White

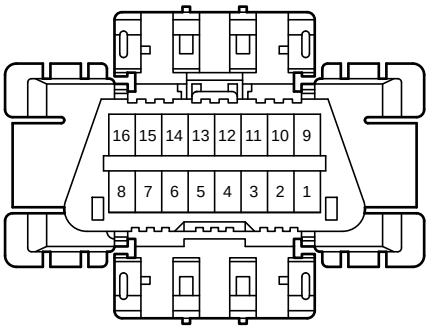

E 36
White

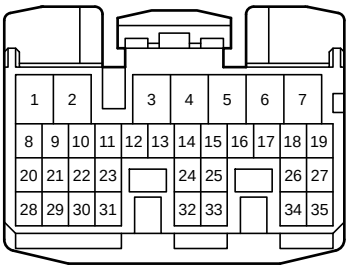

E 52
White

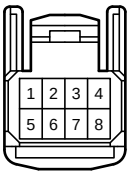

E 81
White

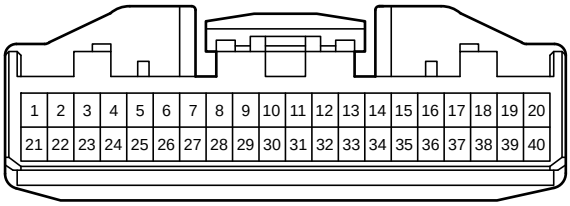

E 93
White

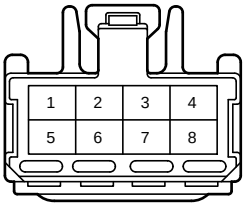

E 96
Black

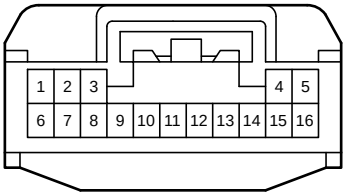

E119
Black

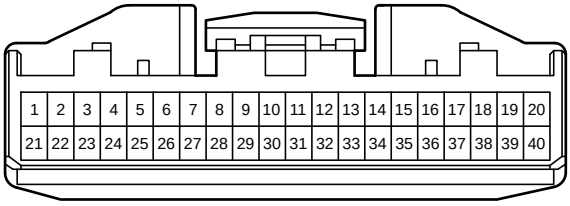

E122
Black

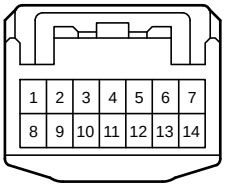

E124
White

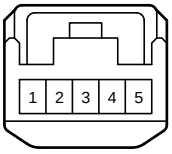

E128
White

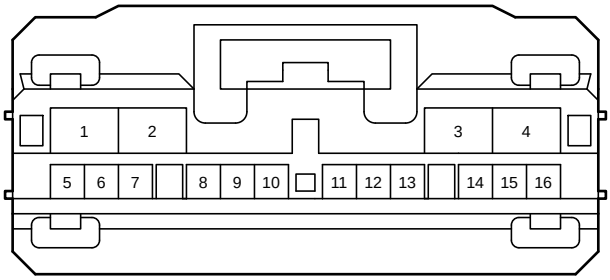

E130
Black

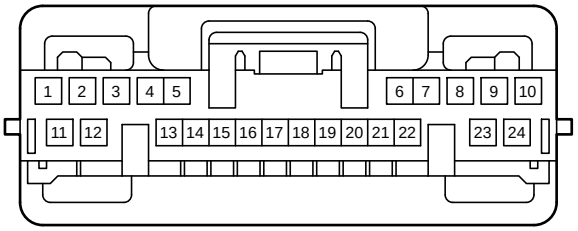

E133
White

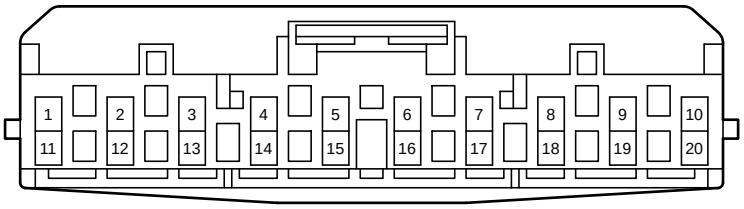

E135
White

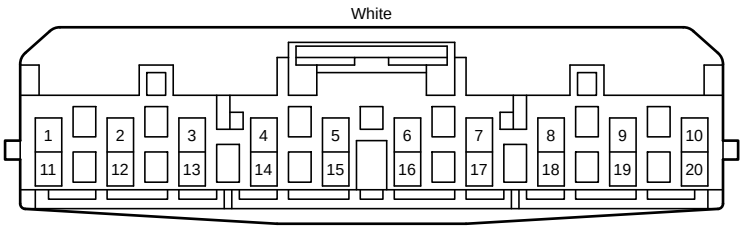

N 1
White

N 14
Black

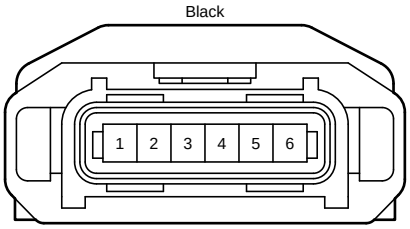

U 1
Black

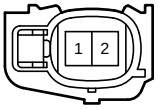

U 2
Black

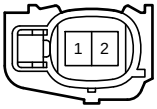

V 4
White

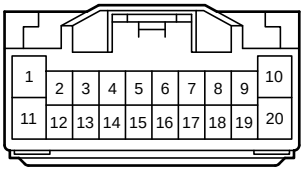

V 9
White

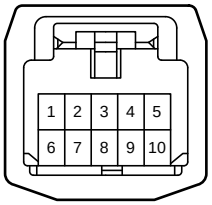

z 37
White

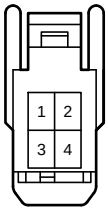

1P
White

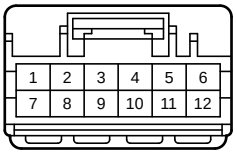

1R
Black

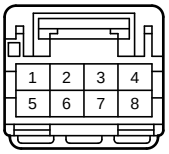

1S
White

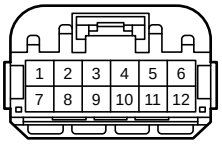

2H
White

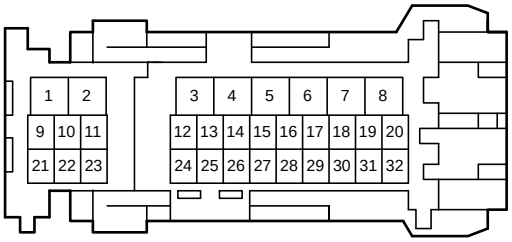

2I
White

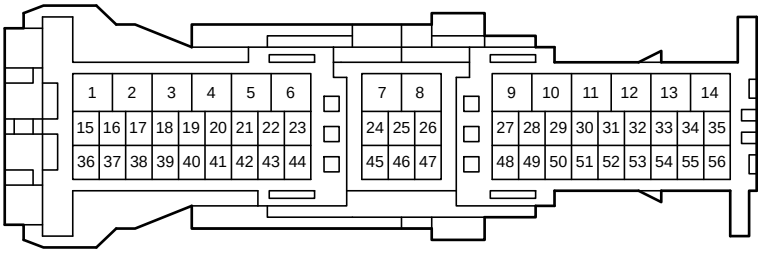

2J
White

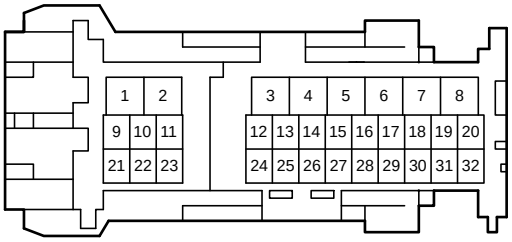

AA1
Gray

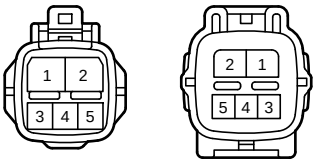

AD1
Black

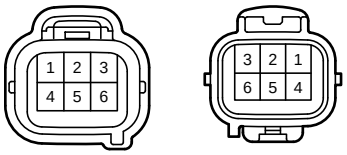

AK1
Blue

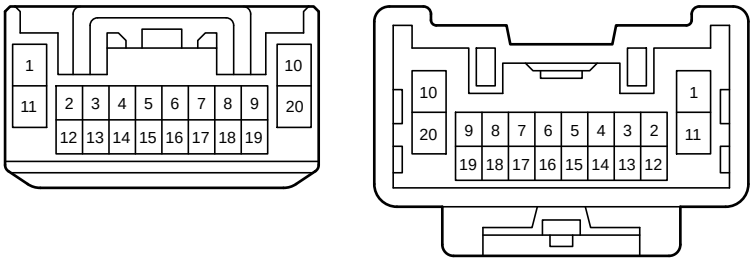

AK2
Gray

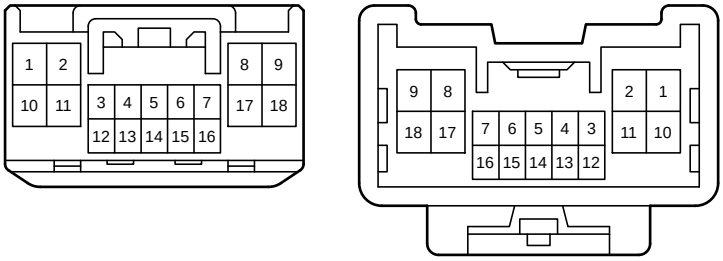

CA3
White

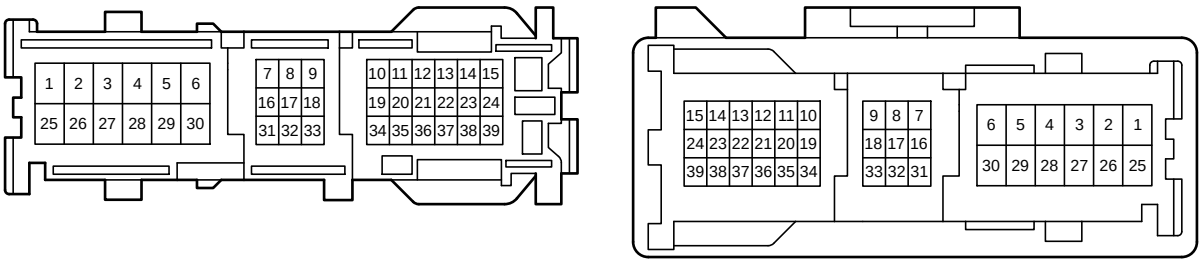

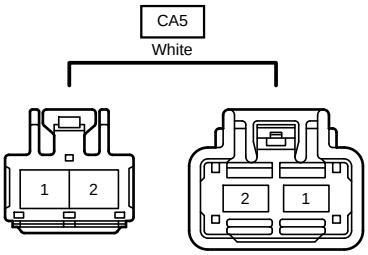
CA5
White
1
2
2
1

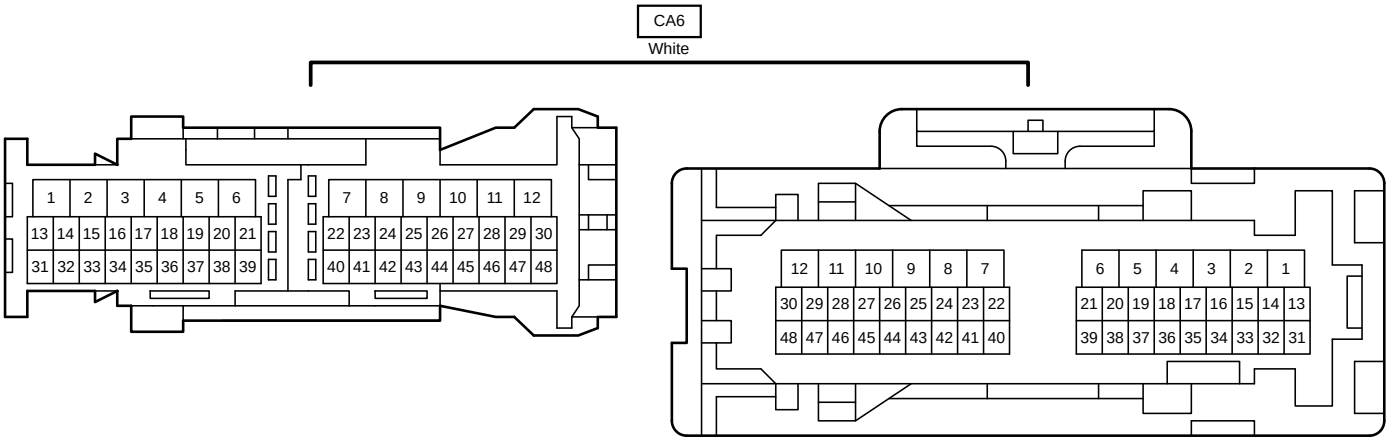
CA6
White
1 2 3 4 5 6 7 8 9 10 11 12
13 14 15 16 17 18 19 20 21 22 23 24 25 26 27 28 29 30
31 32 33 34 35 36 37 38 39 40 41 42 43 44 45 46 47 48
12 11 10 9 8 7 6 5 4 3 2 1
30 29 28 27 26 25 24 23 22 21 20 19 18 17 16 15 14 13
48 47 46 45 44 43 42 41 40 39 38 37 36 35 34 33 32 31

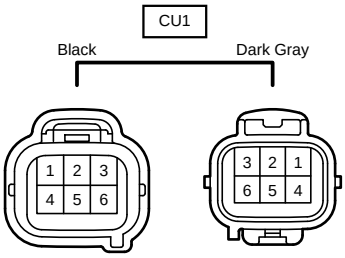
CU1
Black
Dark Gray
1 2 3
4 5 6
3 2 1
6 5 4

EA1

White

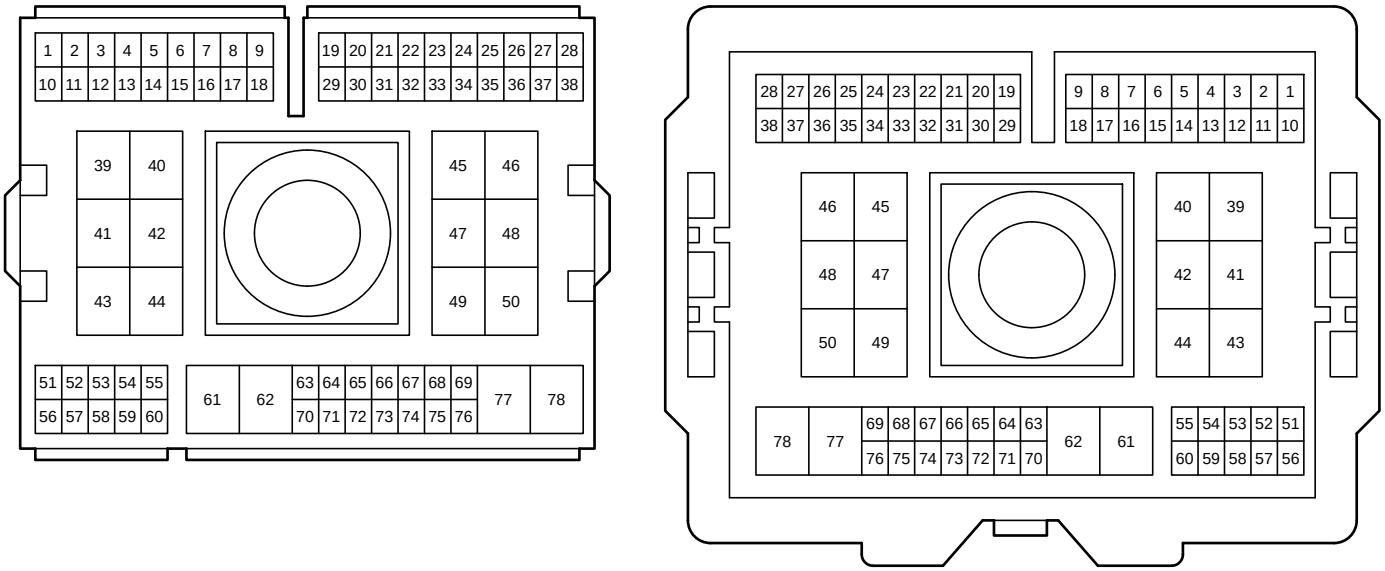

EA3

White

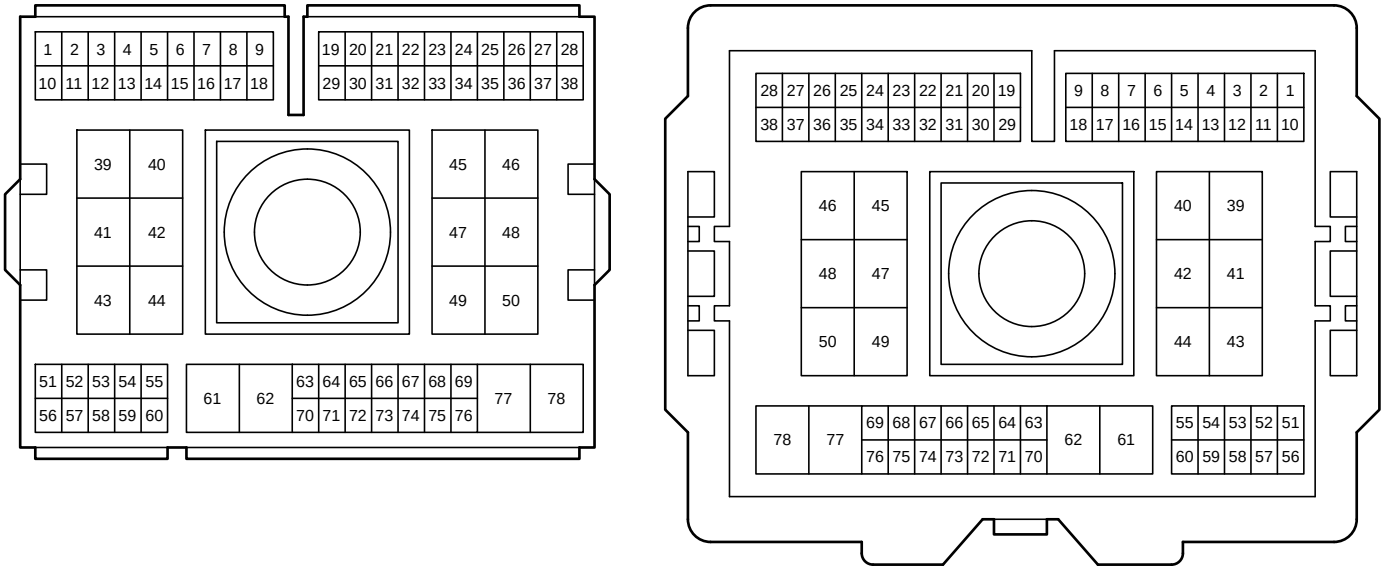

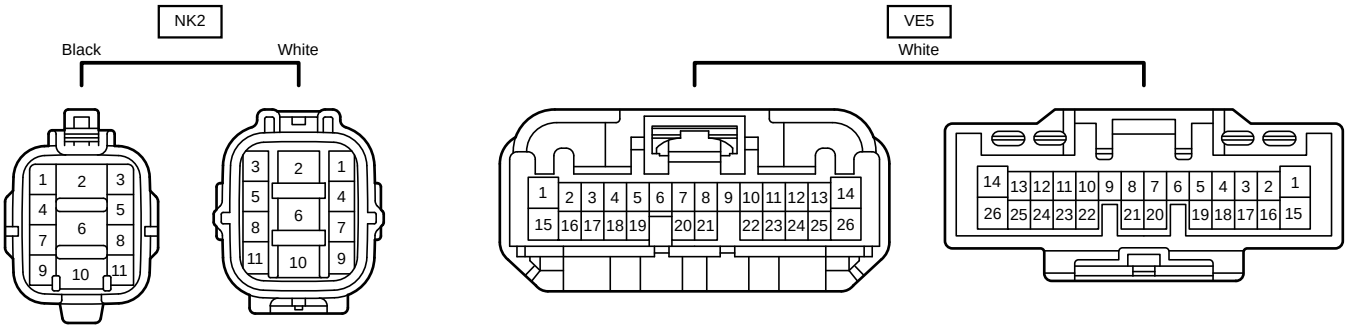
NK2
Black
White
VE5
White