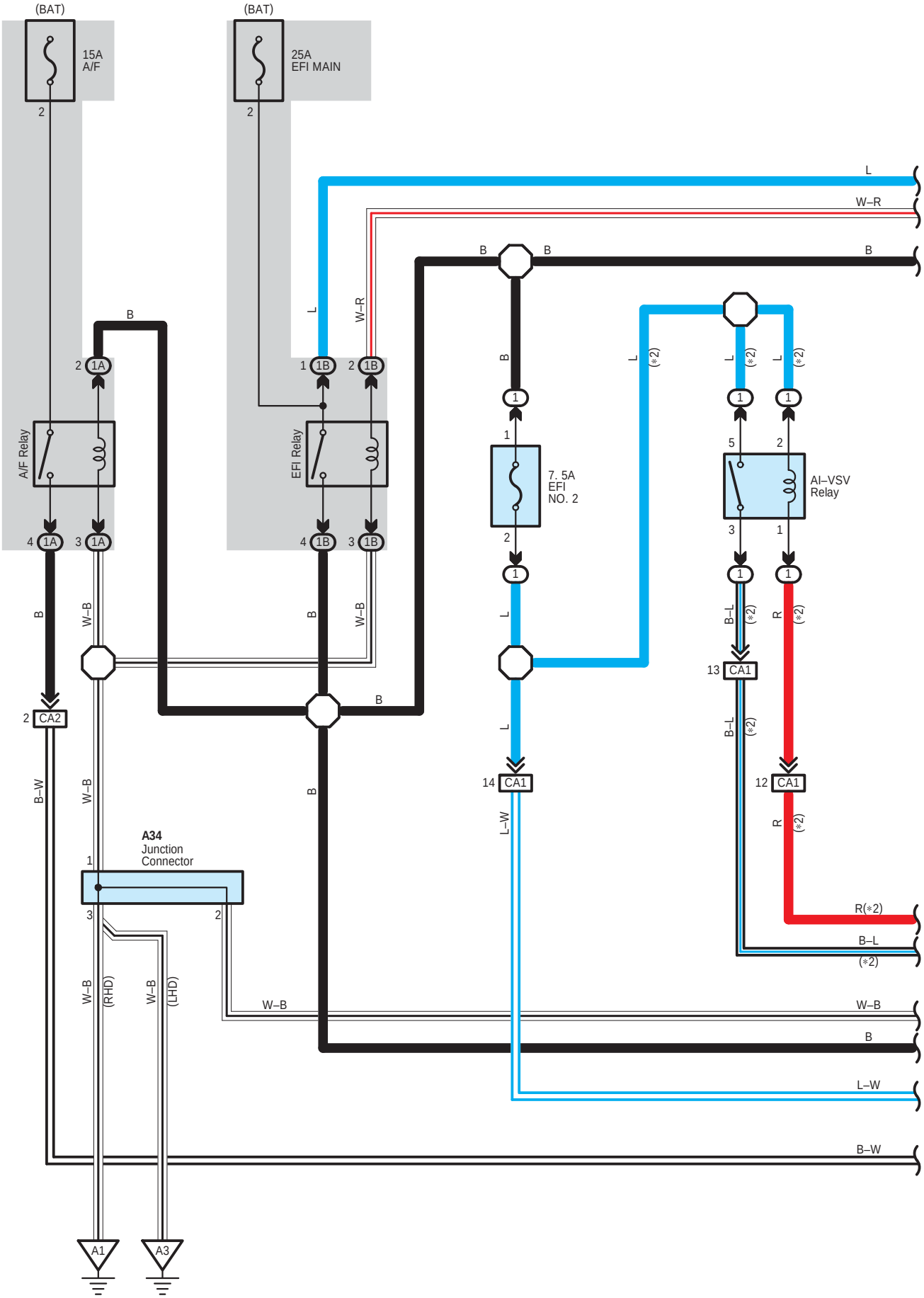
(BAT)
15A
A/F
(BAT)
25A
EFI MAIN
A/F Relay
EFI Relay
7. 5A
EFI
NO. 2
AI–VSV
Relay
CA2
CA1
A34
Junction
Connector
(RHD)
(LHD)
A1
A3
L
W–R
B
W–B
B–W
L–W
B–L
R
R(*2)
(*2)

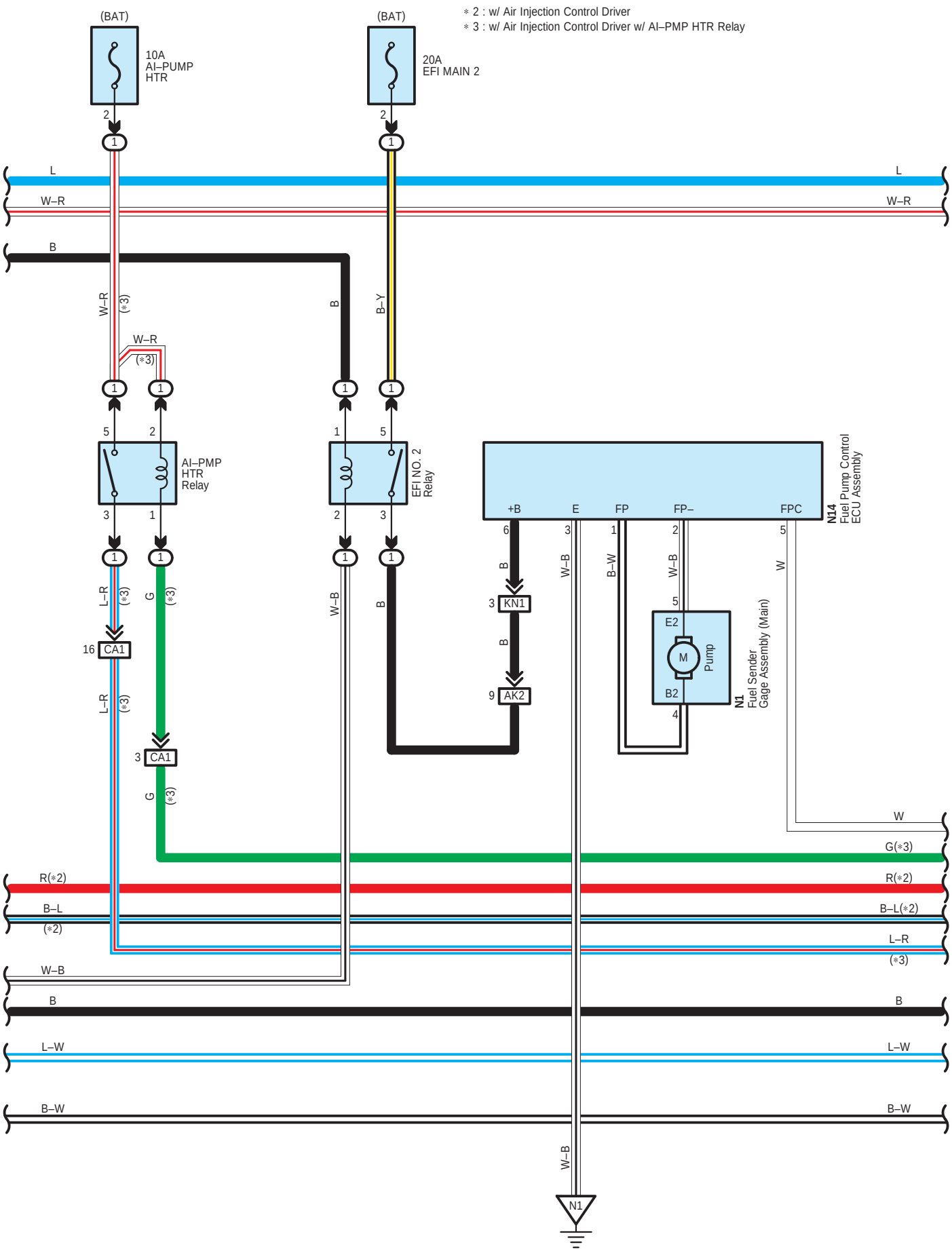
(BAT)
10A
AI–PUMP
HTR
(BAT)
20A
EFI MAIN 2
∗ 2 : w/ Air Injection Control Driver
∗ 3 : w/ Air Injection Control Driver w/ AI–PMP HTR Relay
AI–PMP
HTR
Relay
EFI NO. 2
Relay
N14
Fuel Pump Control
ECU Assembly
+B
E
FP
FP–
FPC
KN1
AK2
CA1
CA1
N1
Fuel Sender
Gage Assembly (Main)
Pump
E2
B2
M
N1

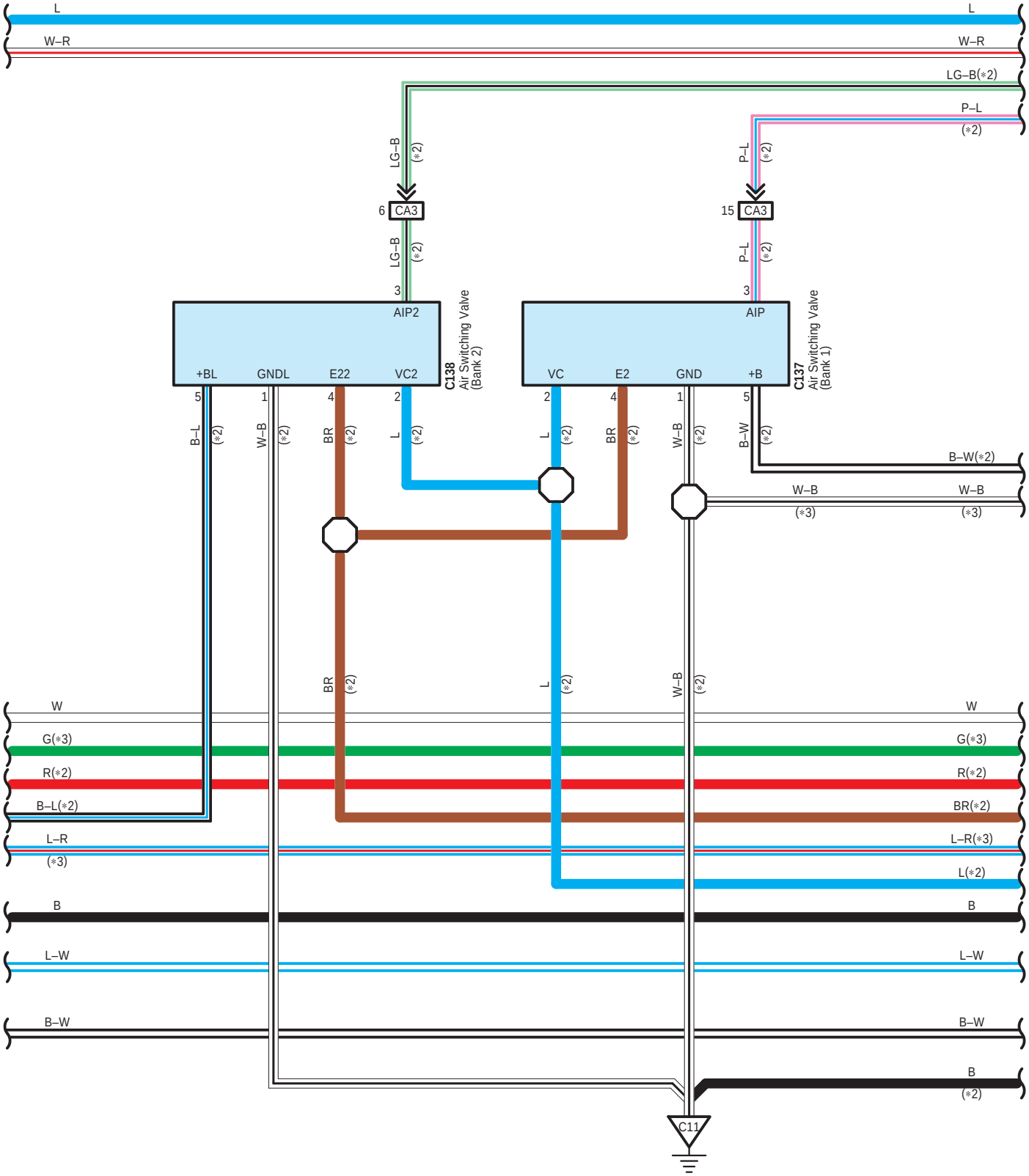
L
W–R
LG–B(*2)
P–L
(*2)
LG–B
(*2)
6
CA3
15
CA3
P–L
3
AIP2
AIP
+BL
GNDL
E22
VC2
VC
E2
GND
+B
C138
Air Switching Valve
(Bank 2)
C137
Air Switching Valve
(Bank 1)
5
1
4
2
B–L
W–B
BR
L
B–W
B–W(*2)
W–B
(*3)
W
G(*3)
R(*2)
B–L(*2)
BR(*2)
L–R
(*3)
L–R(*3)
L(*2)
B
L–W
B–W
C11

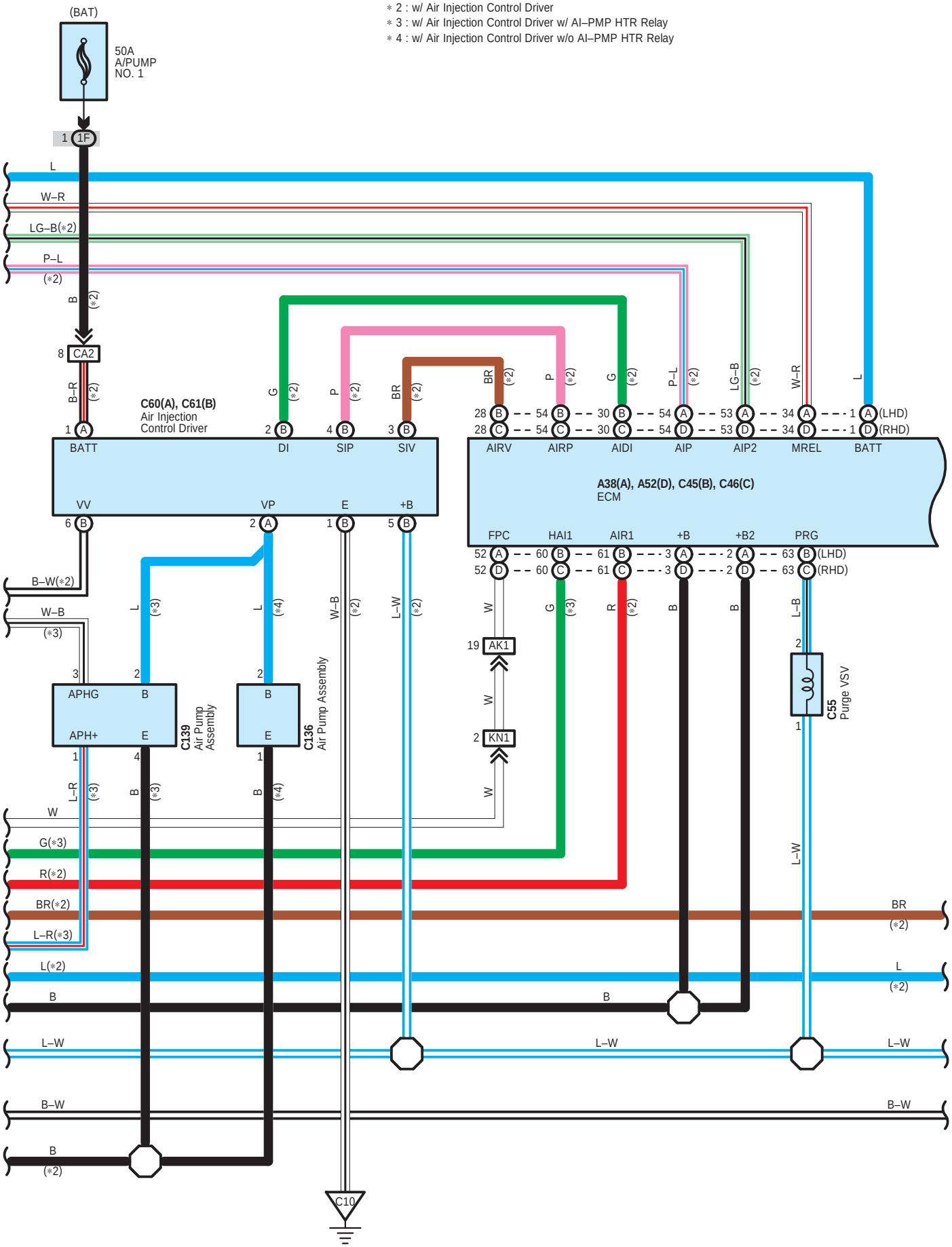
∗ 2 : w/ Air Injection Control Driver
∗ 3 : w/ Air Injection Control Driver w/ AI–PMP HTR Relay
∗ 4 : w/ Air Injection Control Driver w/o AI–PMP HTR Relay
(BAT)
50A
A/PUMP
NO. 1
1F
CA2
C60(A), C61(B)
Air Injection
Control Driver
BATT
DI
SIP
SIV
VV
VP
E
+B
A38(A), A52(D), C45(B), C46(C)
ECM
AIRV
AIRP
AIDI
AIP
AIP2
MREL
BATT
FPC
HAI1
AIR1
+B
+B2
PRG
(LHD)
(RHD)
AK1
KN1
C55
Purge VSV
C139
Air Pump
Assembly
C136
Air Pump Assembly
APHG
APH+
C10

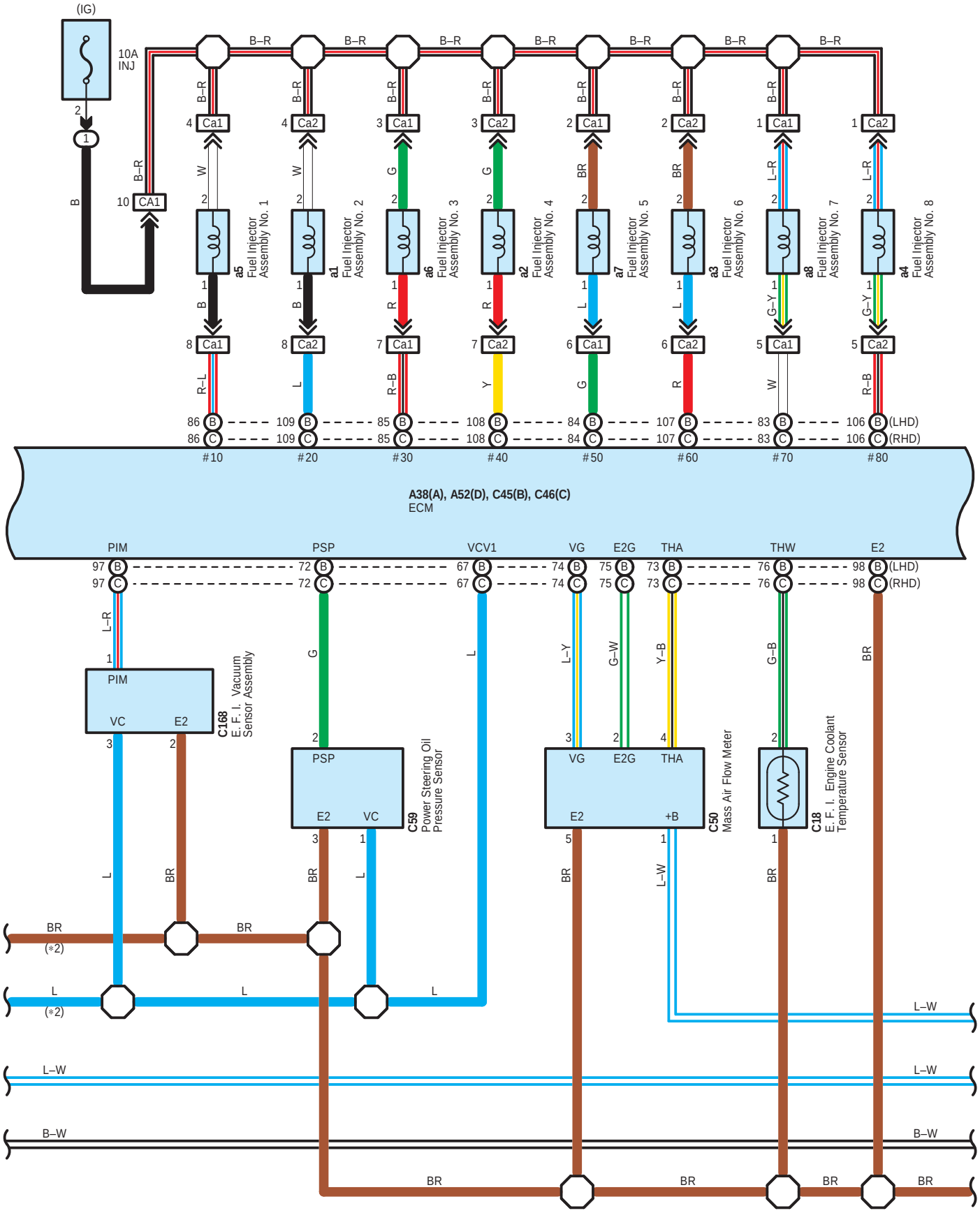
(IG)
10A
INJ
a5 Fuel Injector Assembly No. 1
a1 Fuel Injector Assembly No. 2
a6 Fuel Injector Assembly No. 3
a2 Fuel Injector Assembly No. 4
a7 Fuel Injector Assembly No. 5
a3 Fuel Injector Assembly No. 6
a8 Fuel Injector Assembly No. 7
a4 Fuel Injector Assembly No. 8
#10
#20
#30
#40
#50
#60
#70
#80
(LHD)
(RHD)
A38(A), A52(D), C45(B), C46(C)
ECM
PIM
PSP
VCV1
VG
E2G
THA
THW
E2
C168 E. F. I. Vacuum Sensor Assembly
C59 Power Steering Oil Pressure Sensor
C50 Mass Air Flow Meter
C18 E. F. I. Engine Coolant Temperature Sensor
(*2)

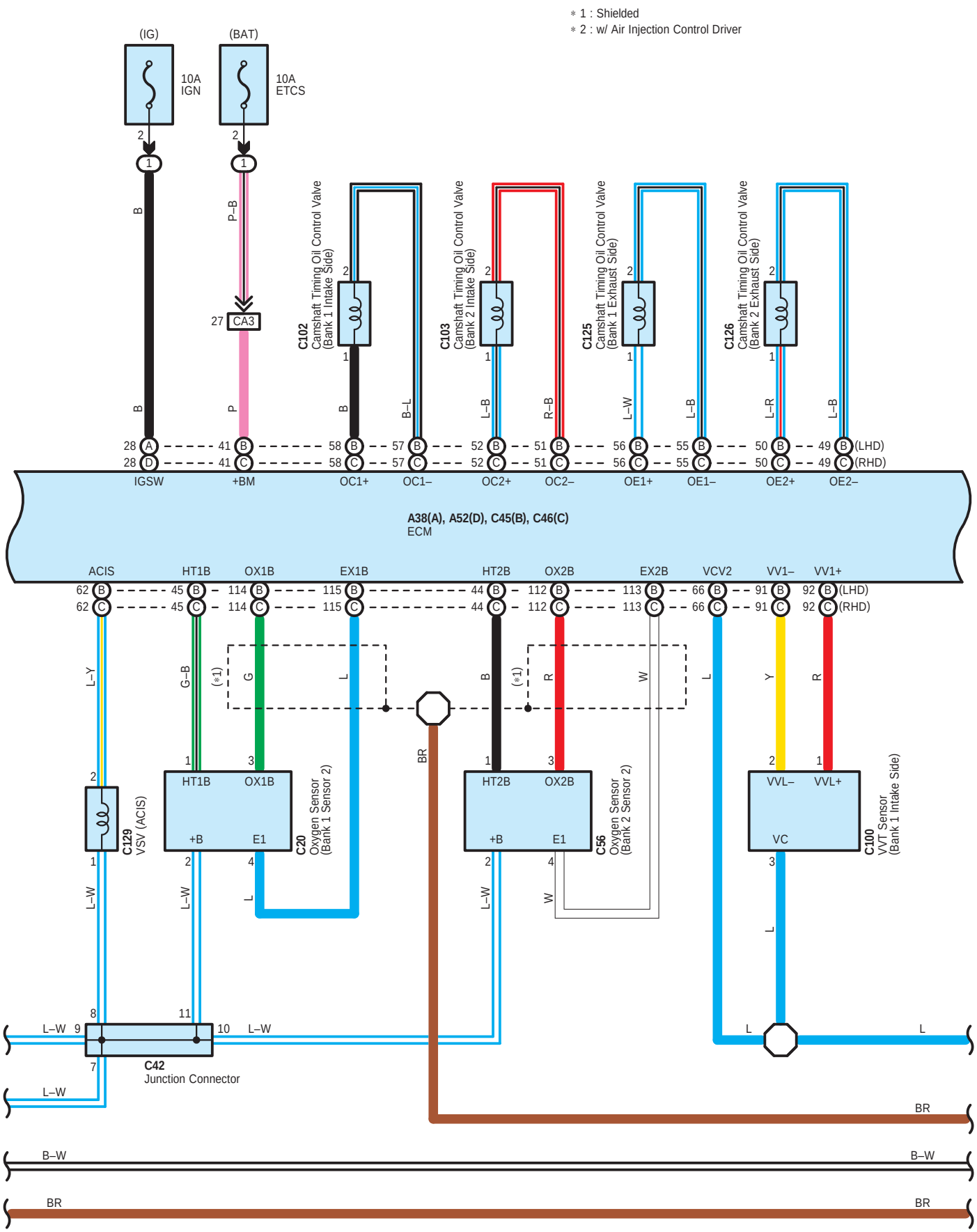
* 1 : Shielded
* 2 : w/ Air Injection Control Driver
(IG)
(BAT)
10A IGN
10A ETCS
CA3
C102 Camshaft Timing Oil Control Valve (Bank 1 Intake Side)
C103 Camshaft Timing Oil Control Valve (Bank 2 Intake Side)
C125 Camshaft Timing Oil Control Valve (Bank 1 Exhaust Side)
C126 Camshaft Timing Oil Control Valve (Bank 2 Exhaust Side)
IGSW
+BM
OC1+
OC1–
OC2+
OC2–
OE1+
OE1–
OE2+
OE2–
(LHD)
(RHD)
A38(A), A52(D), C45(B), C46(C)
ECM
ACIS
HT1B
OX1B
EX1B
HT2B
OX2B
EX2B
VCV2
VV1–
VV1+
C129 VSV (ACIS)
C20 Oxygen Sensor (Bank 1 Sensor 2)
C56 Oxygen Sensor (Bank 2 Sensor 2)
C100 VVT Sensor (Bank 1 Intake Side)
C42 Junction Connector

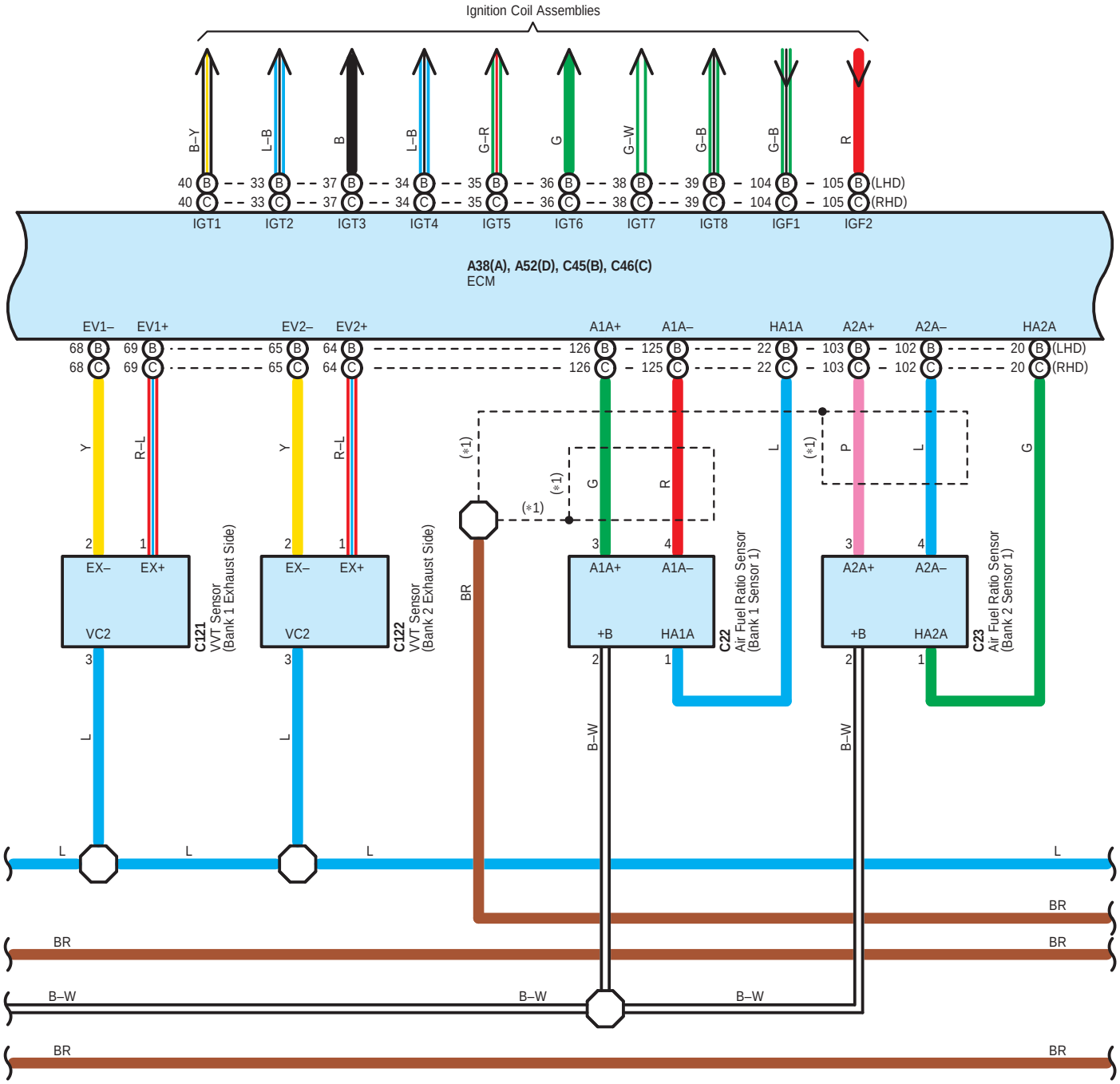
Ignition Coil Assemblies
B–Y
L–B
B
L–B
G–R
G
G–W
G–B
G–B
R
40 B
40 C
33 B
33 C
37 B
37 C
34 B
34 C
35 B
35 C
36 B
36 C
38 B
38 C
39 B
39 C
104 B
104 C
105 B (LHD)
105 C (RHD)
IGT1
IGT2
IGT3
IGT4
IGT5
IGT6
IGT7
IGT8
IGF1
IGF2
A38(A), A52(D), C45(B), C46(C)
ECM
EV1–
EV1+
EV2–
EV2+
A1A+
A1A–
HA1A
A2A+
A2A–
HA2A
68 B
68 C
69 B
69 C
65 B
65 C
64 B
64 C
126 B
126 C
125 B
125 C
22 B
22 C
103 B
103 C
102 B
102 C
20 B (LHD)
20 C (RHD)
Y
R–L
Y
R–L
(*1)
(*1)
(*1)
G
R
L
(*1)
P
L
G
EX–
EX+
VC2
C121
VVT Sensor
(Bank 1 Exhaust Side)
C122
VVT Sensor
(Bank 2 Exhaust Side)
BR
A1A+
A1A–
+B
HA1A
C22
Air Fuel Ratio Sensor
(Bank 1 Sensor 1)
A2A+
A2A–
+B
HA2A
C23
Air Fuel Ratio Sensor
(Bank 2 Sensor 1)
L
B–W
B–W
L
L
L
L
L
BR
BR
BR
B–W
B–W
B–W
BR
BR

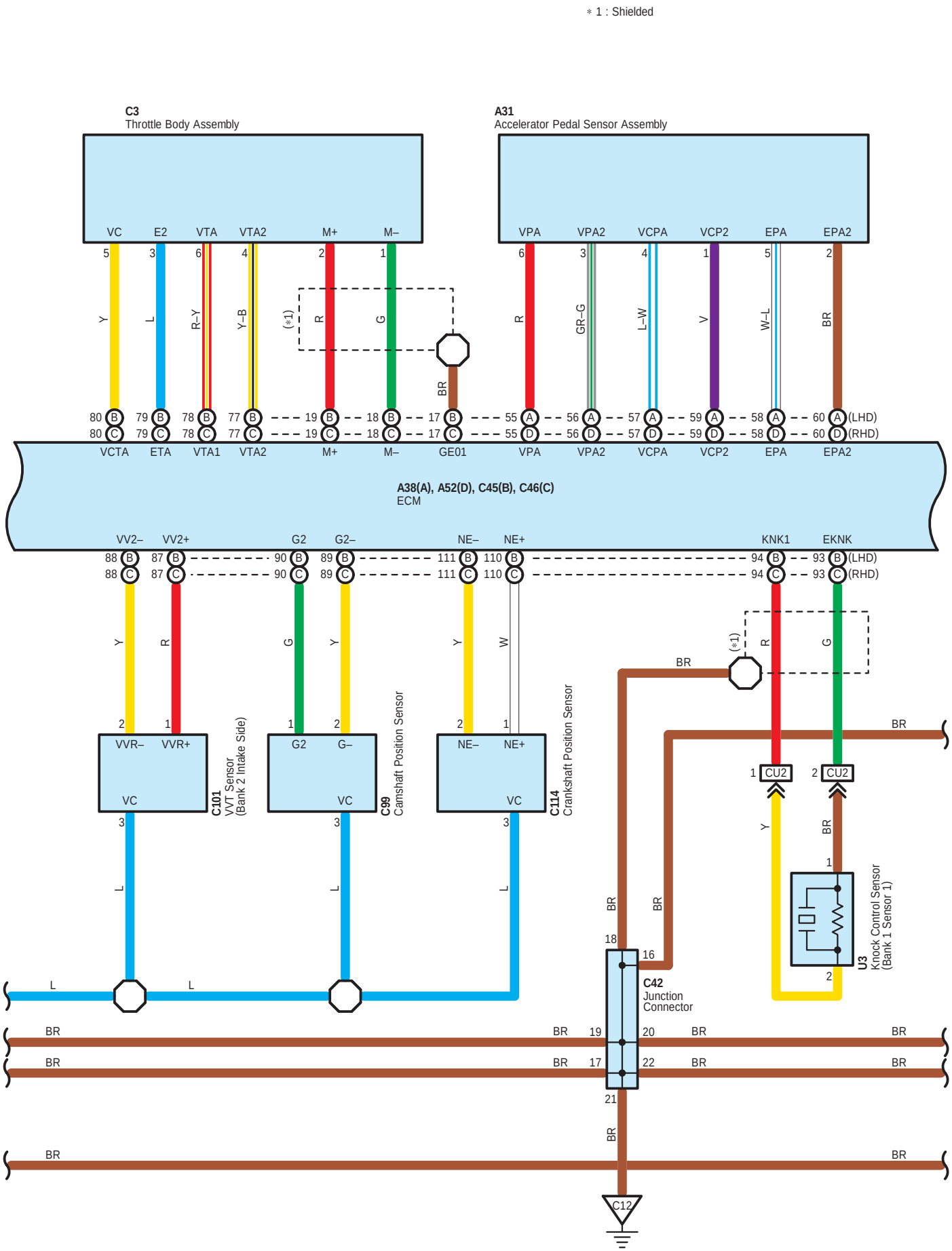
∗1 : Shielded
C3
Throttle Body Assembly
A31
Accelerator Pedal Sensor Assembly
VC E2 VTA VTA2 M+ M–
VPA VPA2 VCPA VCP2 EPA EPA2
VCTA ETA VTA1 VTA2 M+ M– GE01 VPA VPA2 VCPA VCP2 EPA EPA2
(LHD)
(RHD)
A38(A), A52(D), C45(B), C46(C)
ECM
VV2– VV2+ G2 G2– NE– NE+ KNK1 EKNK
VVR– VVR+ VC
C101
VVT Sensor
(Bank 2 Intake Side)
G2 G– VC
C99
Camshaft Position Sensor
NE– NE+ VC
C114
Crankshaft Position Sensor
CU2
U3
Knock Control Sensor
(Bank 1 Sensor 1)
C42
Junction
Connector
C12

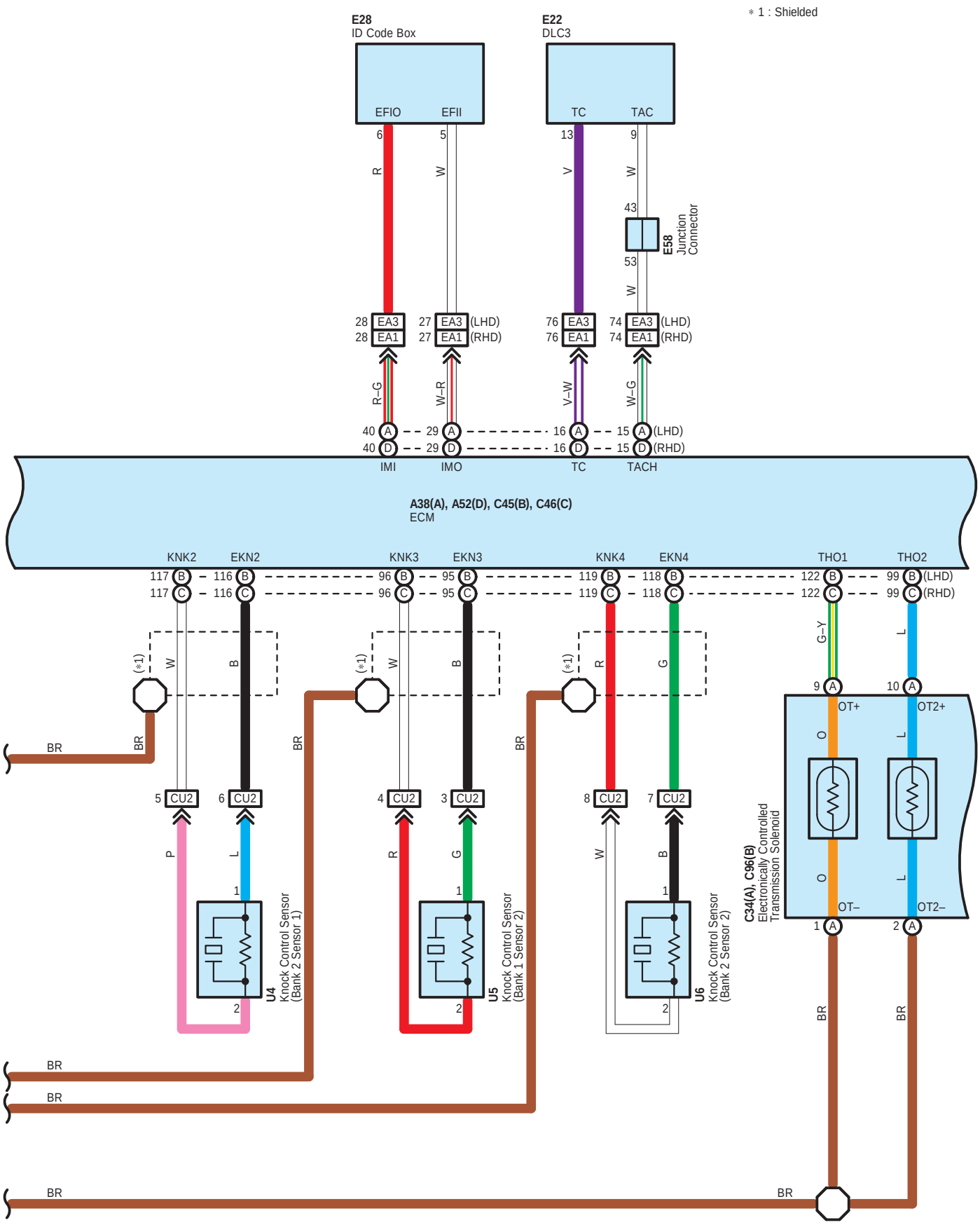
∗1 : Shielded
E28
ID Code Box
E22
DLC3
EFIO
EFII
TC
TAC
E58
Junction Connector
EA3
EA1
(LHD)
(RHD)
IMI
IMO
TC
TACH
A38(A), A52(D), C45(B), C46(C)
ECM
KNK2
EKN2
KNK3
EKN3
KNK4
EKN4
THO1
THO2
CU2
U4
Knock Control Sensor (Bank 2 Sensor 1)
U5
Knock Control Sensor (Bank 1 Sensor 2)
U6
Knock Control Sensor (Bank 2 Sensor 2)
C34(A), C96(B)
Electronically Controlled Transmission Solenoid
OT+
OT2+
OT–
OT2–
BR

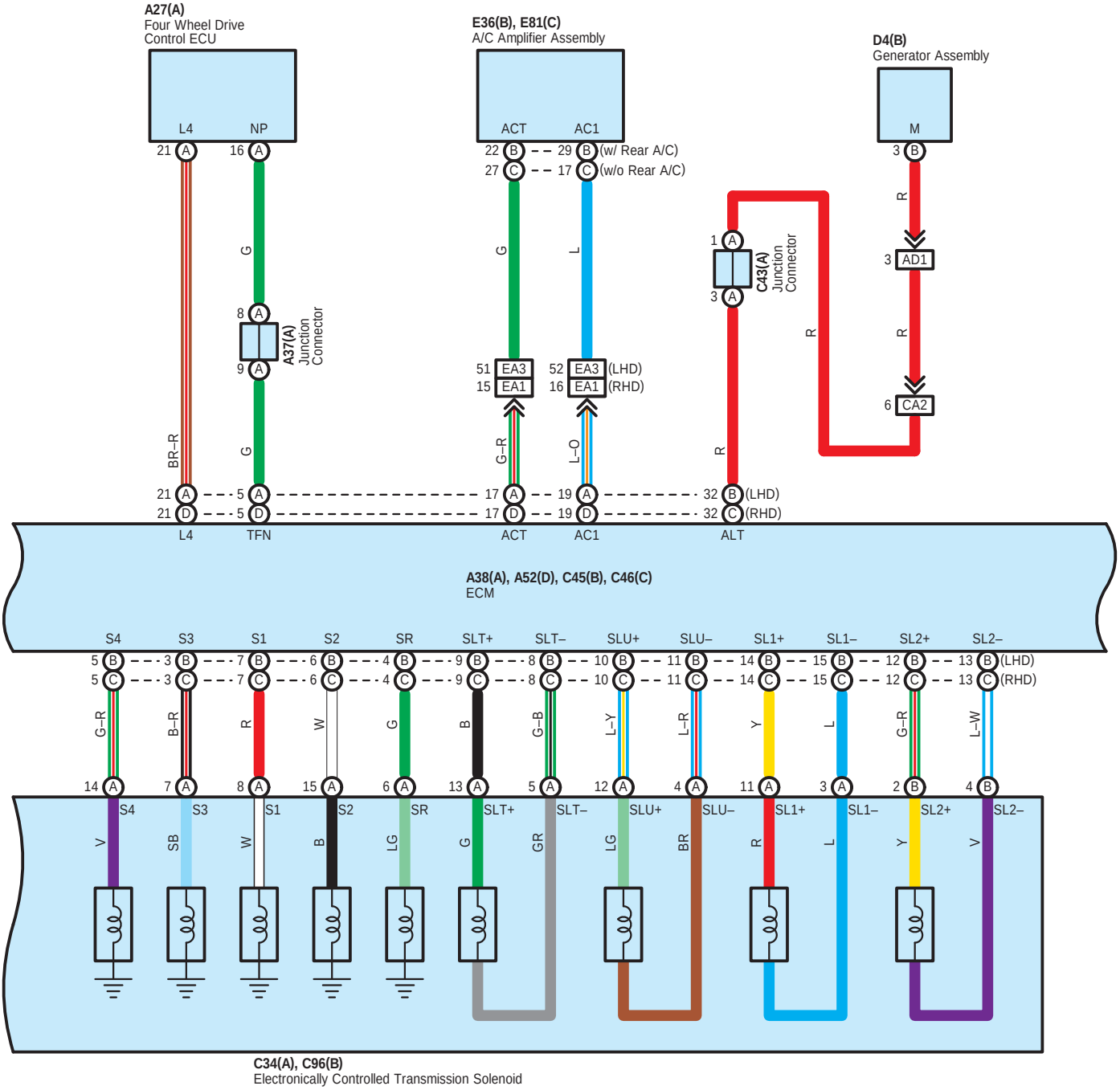
A27(A)
Four Wheel Drive Control ECU
E36(B), E81(C)
A/C Amplifier Assembly
D4(B)
Generator Assembly
L4
NP
ACT
AC1
M
(w/ Rear A/C)
(w/o Rear A/C)
A37(A) Junction Connector
C43(A) Junction Connector
EA3
EA1
(LHD)
(RHD)
AD1
CA2
BR–R
G
G–R
L–O
L
R
TFN
ALT
A38(A), A52(D), C45(B), C46(C)
ECM
S4
S3
S1
S2
SR
SLT+
SLT–
SLU+
SLU–
SL1+
SL1–
SL2+
SL2–
G–R
B–R
W
B
G–B
L–Y
L–R
Y
G–R
L–W
V
SB
LG
GR
BR
C34(A), C96(B)
Electronically Controlled Transmission Solenoid

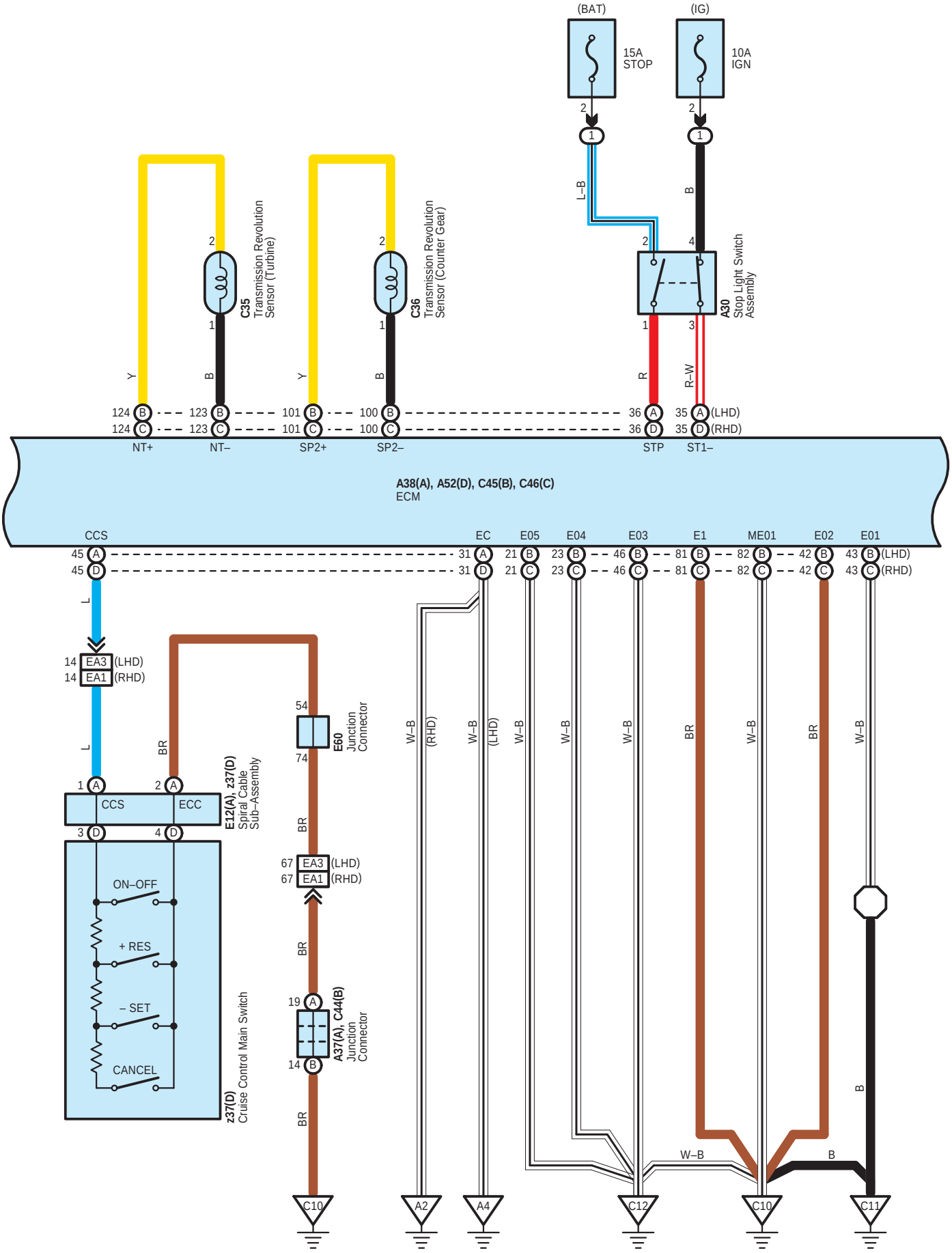
(BAT)
(IG)
15A
STOP
10A
IGN
C35
Transmission Revolution Sensor (Turbine)
C36
Transmission Revolution Sensor (Counter Gear)
A30
Stop Light Switch Assembly
NT+
NT–
SP2+
SP2–
STP
ST1–
A38(A), A52(D), C45(B), C46(C)
ECM
CCS
EC
E05
E04
E03
E1
ME01
E02
E01
EA3
EA1
E60
Junction Connector
E12(A), z37(D)
Spiral Cable Sub–Assembly
ON–OFF
+ RES
– SET
CANCEL
z37(D)
Cruise Control Main Switch
A37(A), C44(B)
Junction Connector
C10
A2
A4
C12
C11

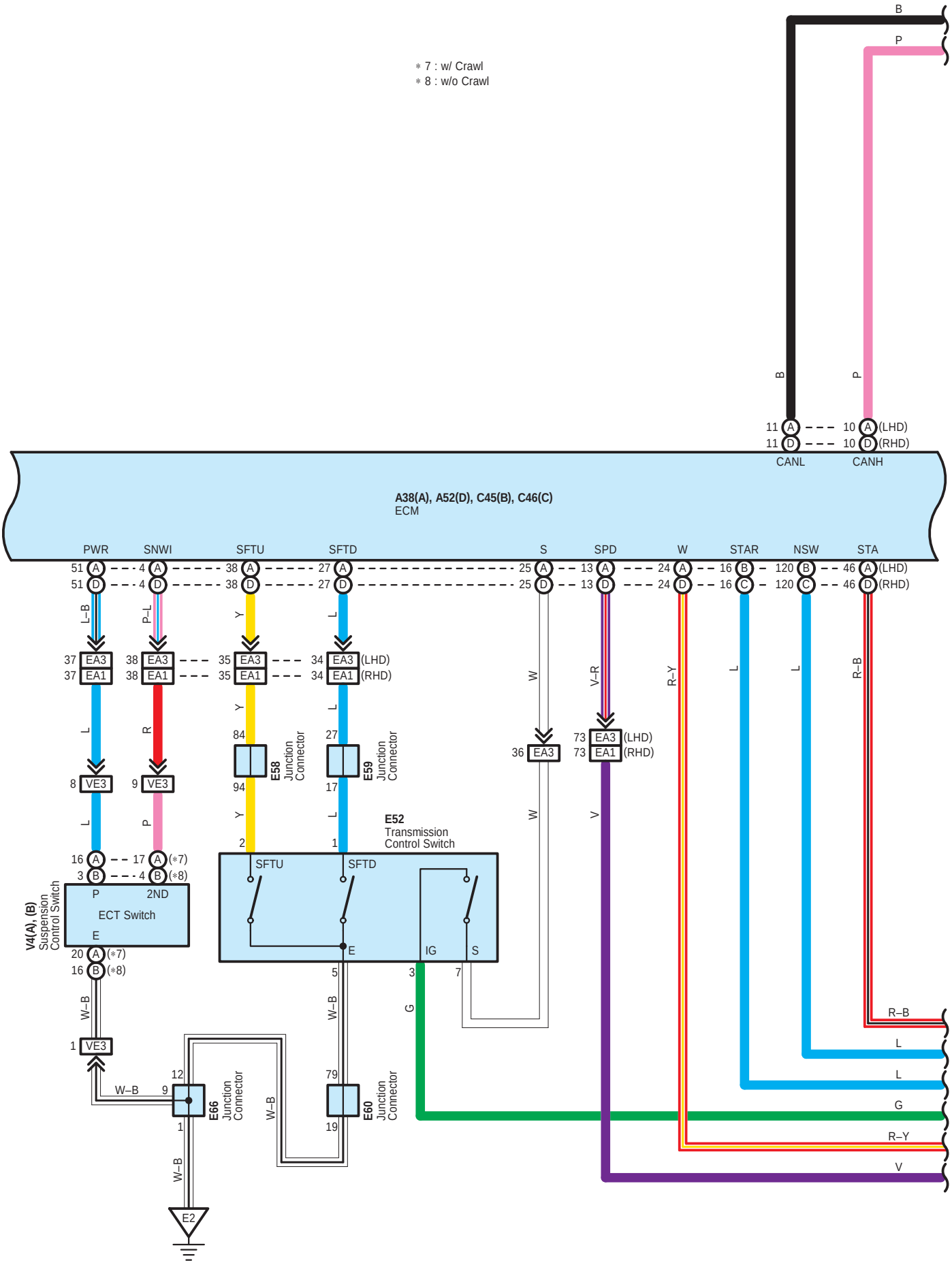
∗ 7 : w/ Crawl
∗ 8 : w/o Crawl
B
P
11 A
11 D
10 A (LHD)
10 D (RHD)
CANL
CANH
A38(A), A52(D), C45(B), C46(C)
ECM
PWR
SNWI
SFTU
SFTD
S
SPD
W
STAR
NSW
STA
51 A
51 D
4 A
4 D
38 A
38 D
27 A
27 D
25 A
25 D
13 A
13 D
24 A
24 D
16 B
16 C
120 B
120 C
46 A (LHD)
46 D (RHD)
L–B
P–L
Y
L
W
V–R
R–Y
R–B
37 EA3
37 EA1
38 EA3
38 EA1
35 EA3
35 EA1
34 EA3 (LHD)
34 EA1 (RHD)
36 EA3
73 EA3 (LHD)
73 EA1 (RHD)
R
8 VE3
9 VE3
84
94
E58 Junction Connector
27
17
E59 Junction Connector
E52
Transmission Control Switch
2
1
16 A
3 B
17 A (∗7)
4 B (∗8)
P
2ND
ECT Switch
E
V4(A), (B) Suspension Control Switch
20 A (∗7)
16 B (∗8)
SFTU
SFTD
E
IG
S
5
3
7
G
W–B
1 VE3
12
9
1
E66 Junction Connector
79
19
E60 Junction Connector
E2

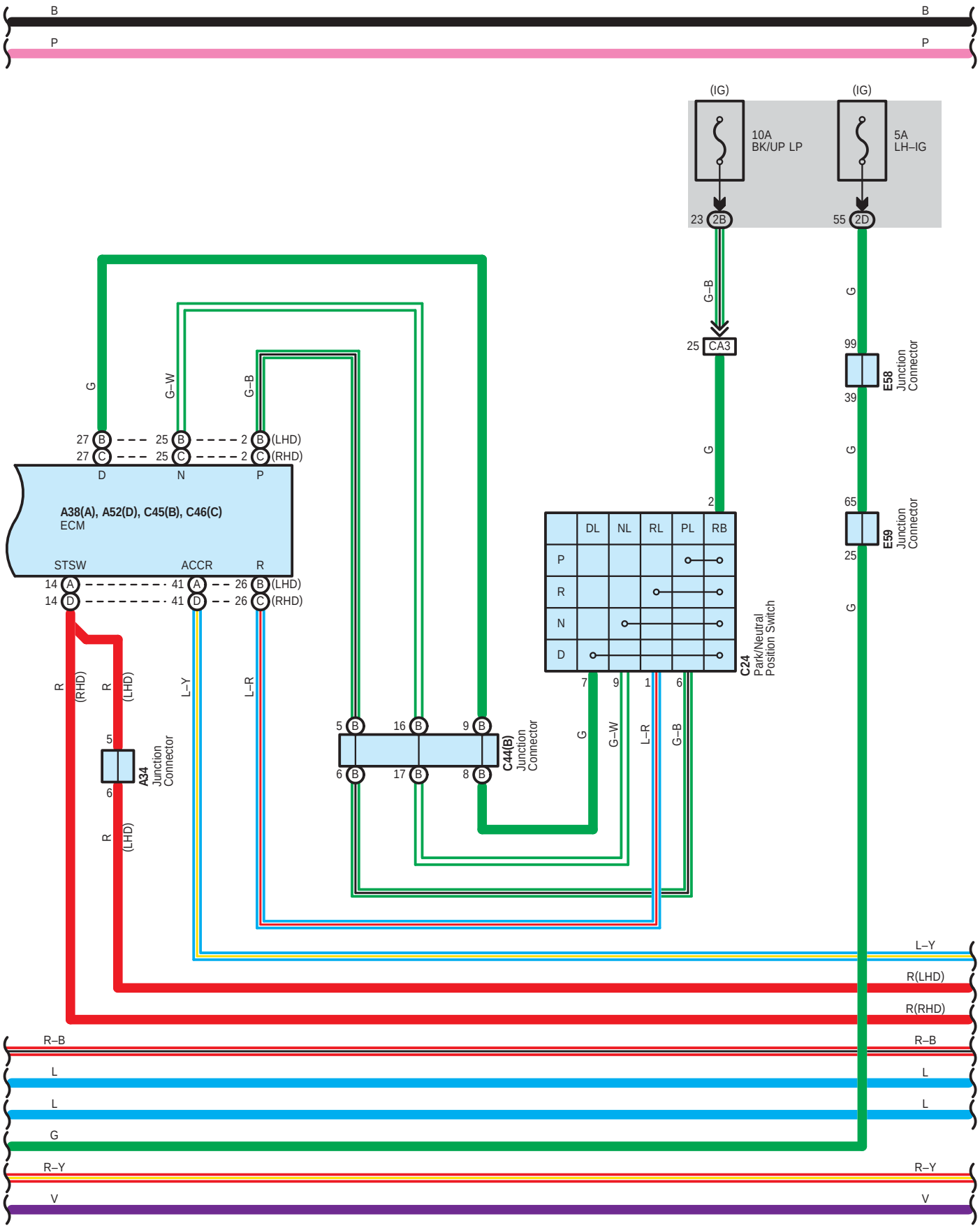
B
P
(IG)
10A
BK/UP LP
5A
LH–IG
23 2B
55 2D
G–B
G
25 CA3
99
E58
Junction
Connector
39
2
65
E59
Junction
Connector
25
27 B
27 C
25 B
25 C
2 B (LHD)
2 C (RHD)
D
N
P
A38(A), A52(D), C45(B), C46(C)
ECM
STSW
ACCR
R
14 A
14 D
41 A
41 D
26 B (LHD)
26 C (RHD)
G–W
DL
NL
RL
PL
RB
P
R
N
D
C24
Park/Neutral
Position Switch
7
9
1
6
R (RHD)
R (LHD)
L–Y
L–R
5
6
A34
Junction
Connector
5 B
16 B
9 B
6 B
17 B
8 B
C44(B)
Junction
Connector
L–Y
R(LHD)
R(RHD)
R–B
L
G
R–Y
V

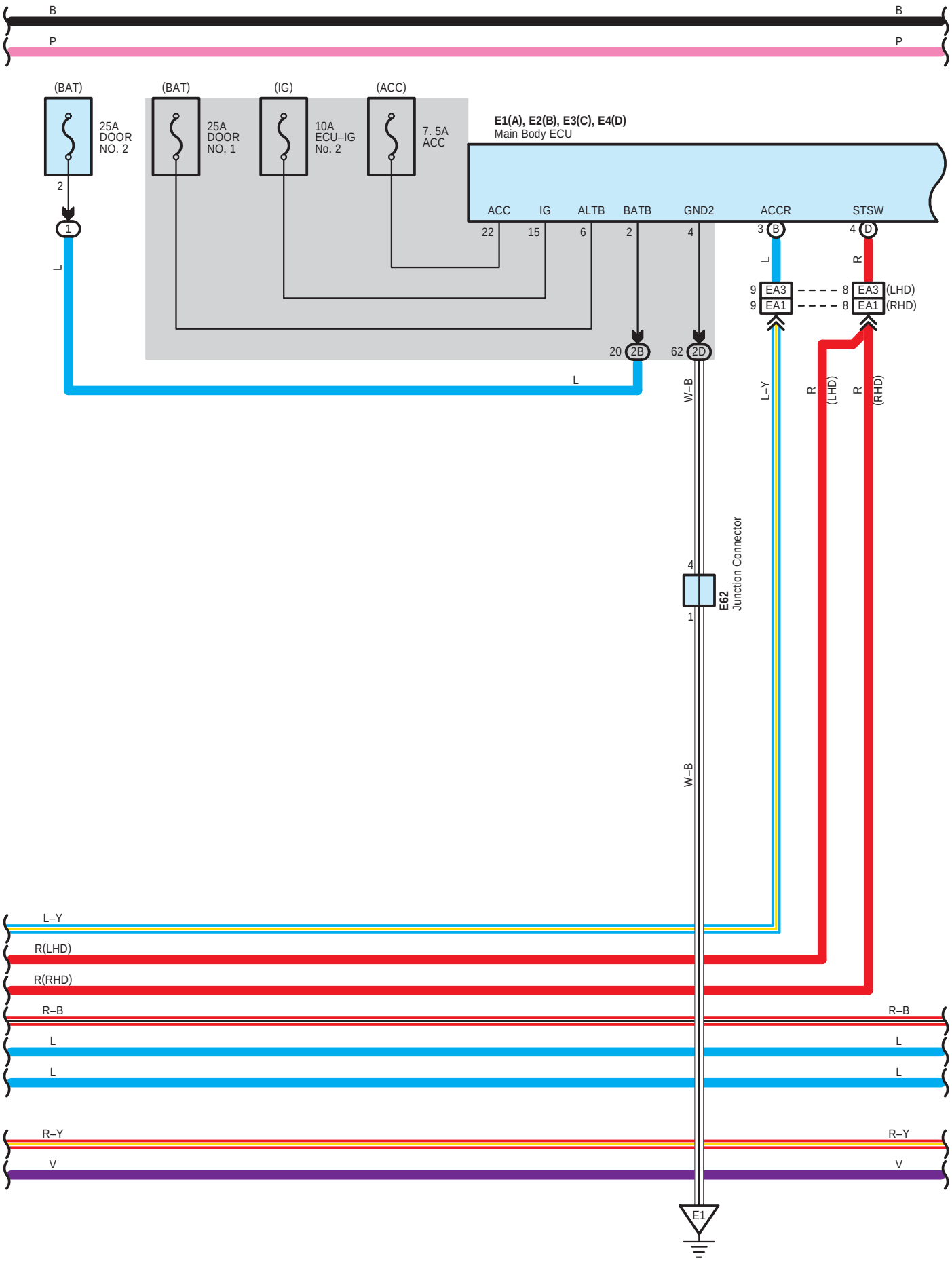
B
P
(BAT)
25A
DOOR
NO. 2
(BAT)
25A
DOOR
NO. 1
(IG)
10A
ECU–IG
No. 2
(ACC)
7. 5A
ACC
E1(A), E2(B), E3(C), E4(D)
Main Body ECU
ACC
IG
ALTB
BATB
GND2
ACCR
STSW
22
15
6
2
4
3 B
4 D
9 EA3
9 EA1
8 EA3 (LHD)
8 EA1 (RHD)
20 2B
62 2D
L
R
W–B
L–Y
R (LHD)
R (RHD)
E62
Junction Connector
L–Y
R(LHD)
R(RHD)
R–B
L
R–Y
V
E1

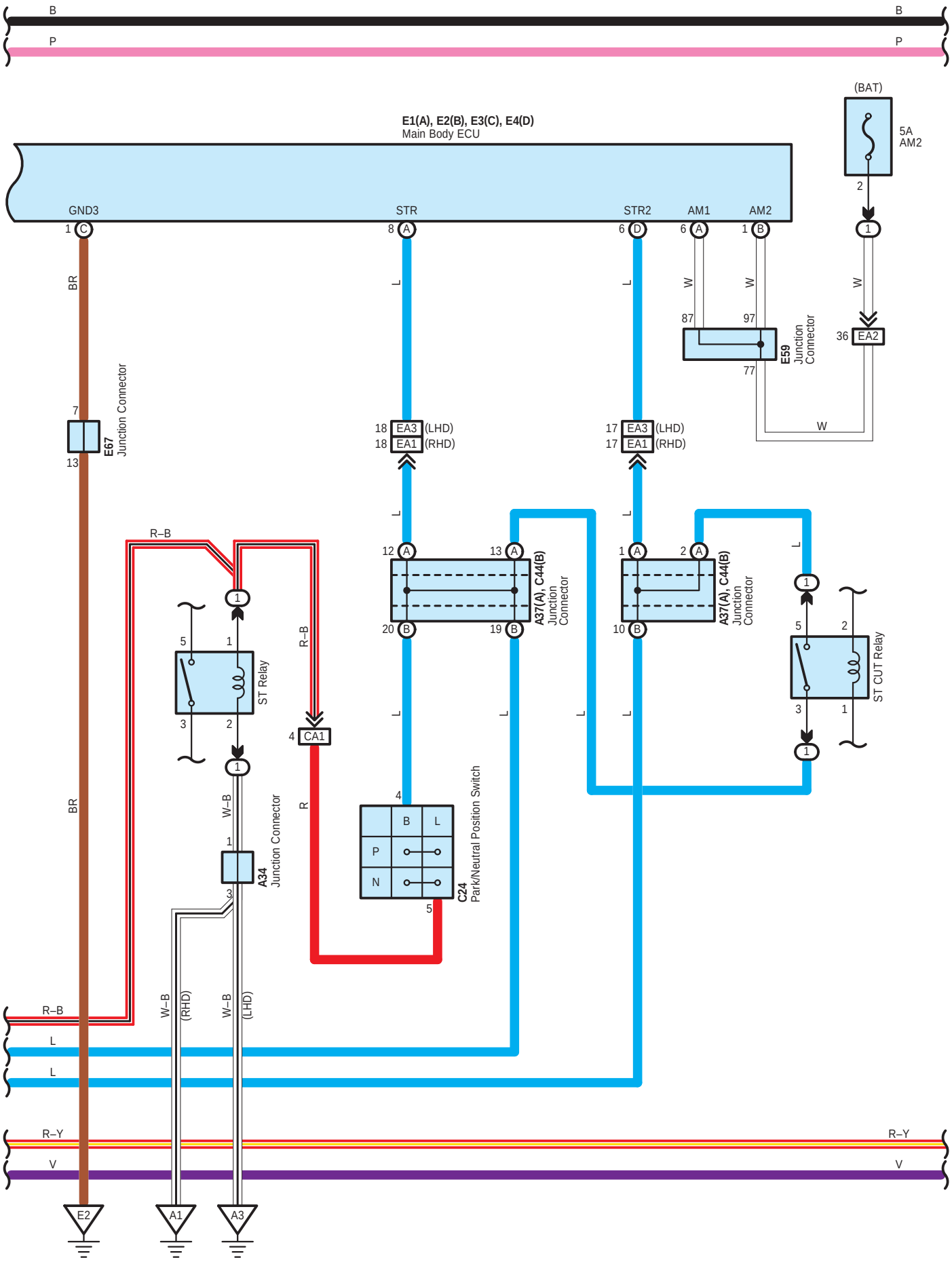
B
P
(BAT)
5A
AM2
E1(A), E2(B), E3(C), E4(D)
Main Body ECU
GND3
STR
STR2
AM1
AM2
BR
L
W
E59
Junction Connector
EA2
E67
Junction Connector
EA3 (LHD)
EA1 (RHD)
R–B
A37(A), C44(B)
Junction Connector
ST Relay
ST CUT Relay
CA1
W–B
R
A34
Junction Connector
C24
Park/Neutral Position Switch
(RHD)
(LHD)
R–Y
V
E2
A1
A3

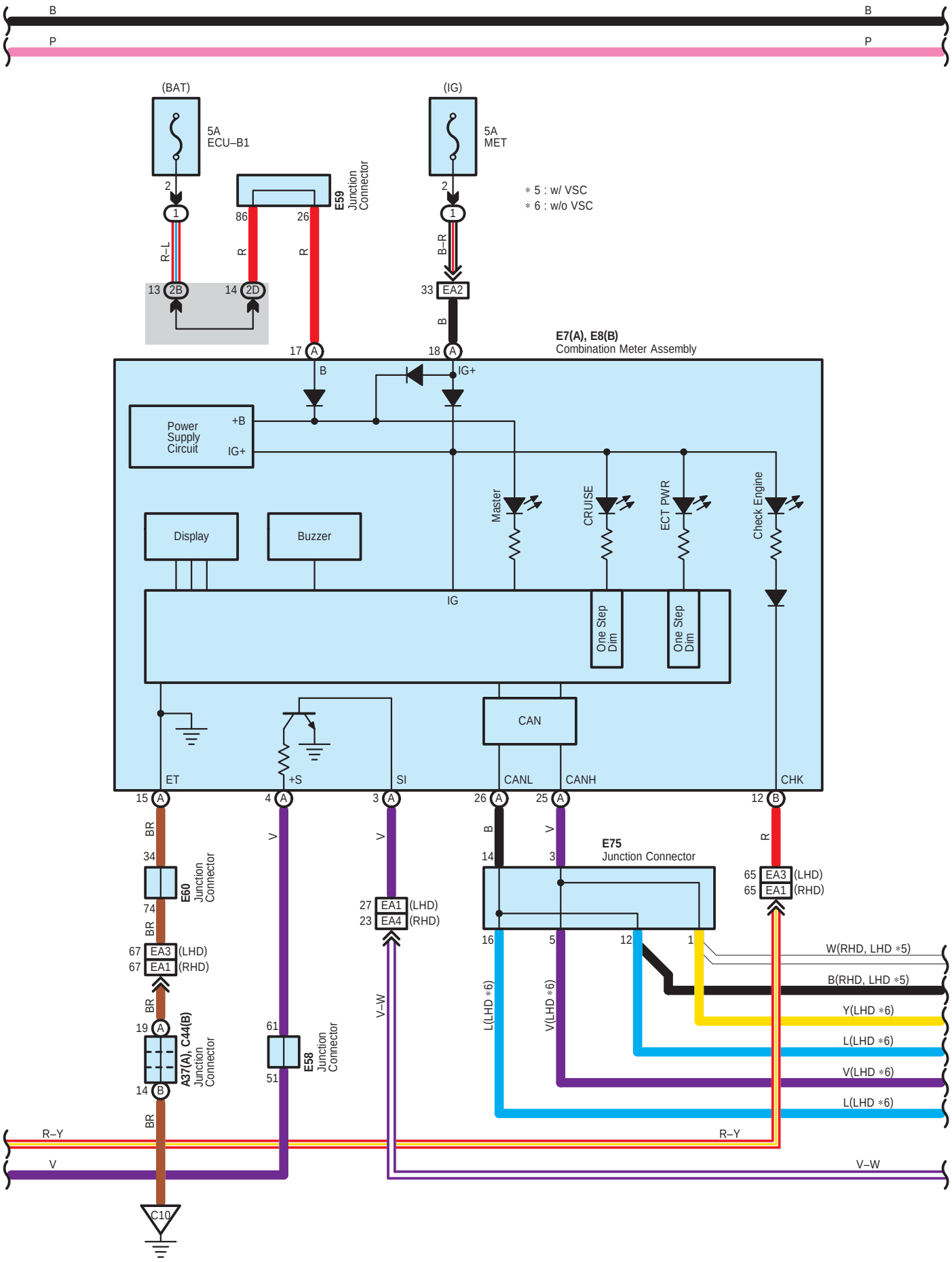
B
P
(BAT)
5A
ECU–B1
(IG)
5A
MET
E59
Junction
Connector
∗ 5 : w/ VSC
∗ 6 : w/o VSC
R–L
R
B–R
B
13 2B
14 2D
33 EA2
17 A
18 A
E7(A), E8(B)
Combination Meter Assembly
IG+
Power
Supply
Circuit
+B
Master
CRUISE
ECT PWR
Check Engine
Display
Buzzer
IG
One Step
Dim
CAN
ET
+S
SI
CANL
CANH
CHK
15 A
4 A
3 A
26 A
25 A
12 B
34
74
E60
Junction
Connector
67 EA3 (LHD)
67 EA1 (RHD)
19 A
14 B
A37(A), C44(B)
Junction
Connector
61
51
E58
Junction
Connector
27 EA1 (LHD)
23 EA4 (RHD)
V–W
E75
Junction Connector
14
3
16
5
12
1
65 EA3 (LHD)
65 EA1 (RHD)
L(LHD ∗6)
V(LHD ∗6)
W(RHD, LHD ∗5)
B(RHD, LHD ∗5)
Y(LHD ∗6)
L(LHD ∗6)
V(LHD ∗6)
L(LHD ∗6)
R–Y
V
C10

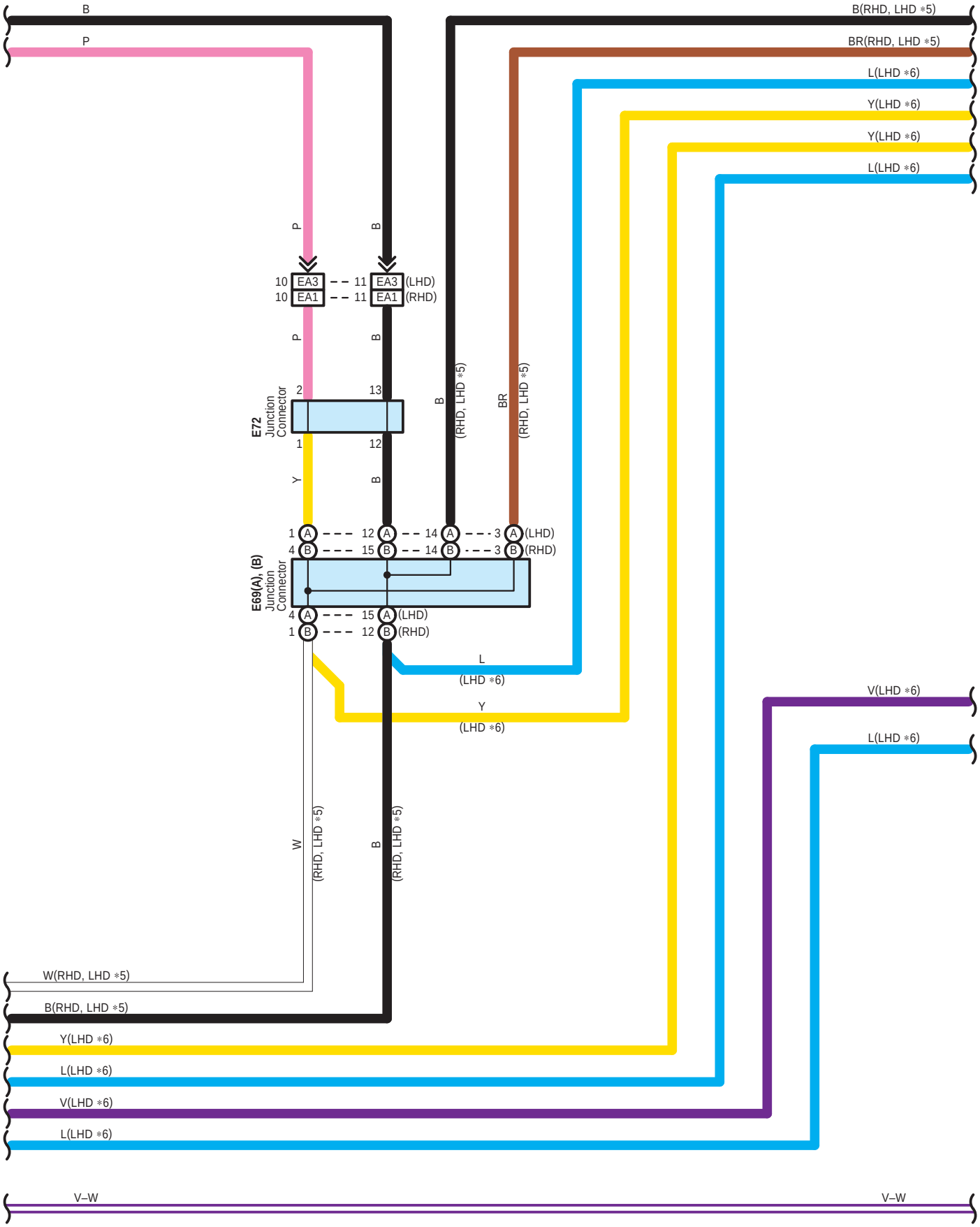
B
P
B(RHD, LHD *5)
BR(RHD, LHD *5)
L(LHD *6)
Y(LHD *6)
Y(LHD *6)
L(LHD *6)
P
B
10 EA3 11 EA3 (LHD)
10 EA1 11 EA1 (RHD)
P
B
E72 Junction Connector
2
13
1
12
B
(RHD, LHD *5)
BR
(RHD, LHD *5)
Y
B
1 A 12 A 14 A 3 A (LHD)
4 B 15 B 14 B 3 B (RHD)
E69(A), (B) Junction Connector
4 A 15 A (LHD)
1 B 12 B (RHD)
L
(LHD *6)
Y
(LHD *6)
V(LHD *6)
L(LHD *6)
W
(RHD, LHD *5)
B
(RHD, LHD *5)
W(RHD, LHD *5)
B(RHD, LHD *5)
Y(LHD *6)
L(LHD *6)
V(LHD *6)
L(LHD *6)
V–W
V–W

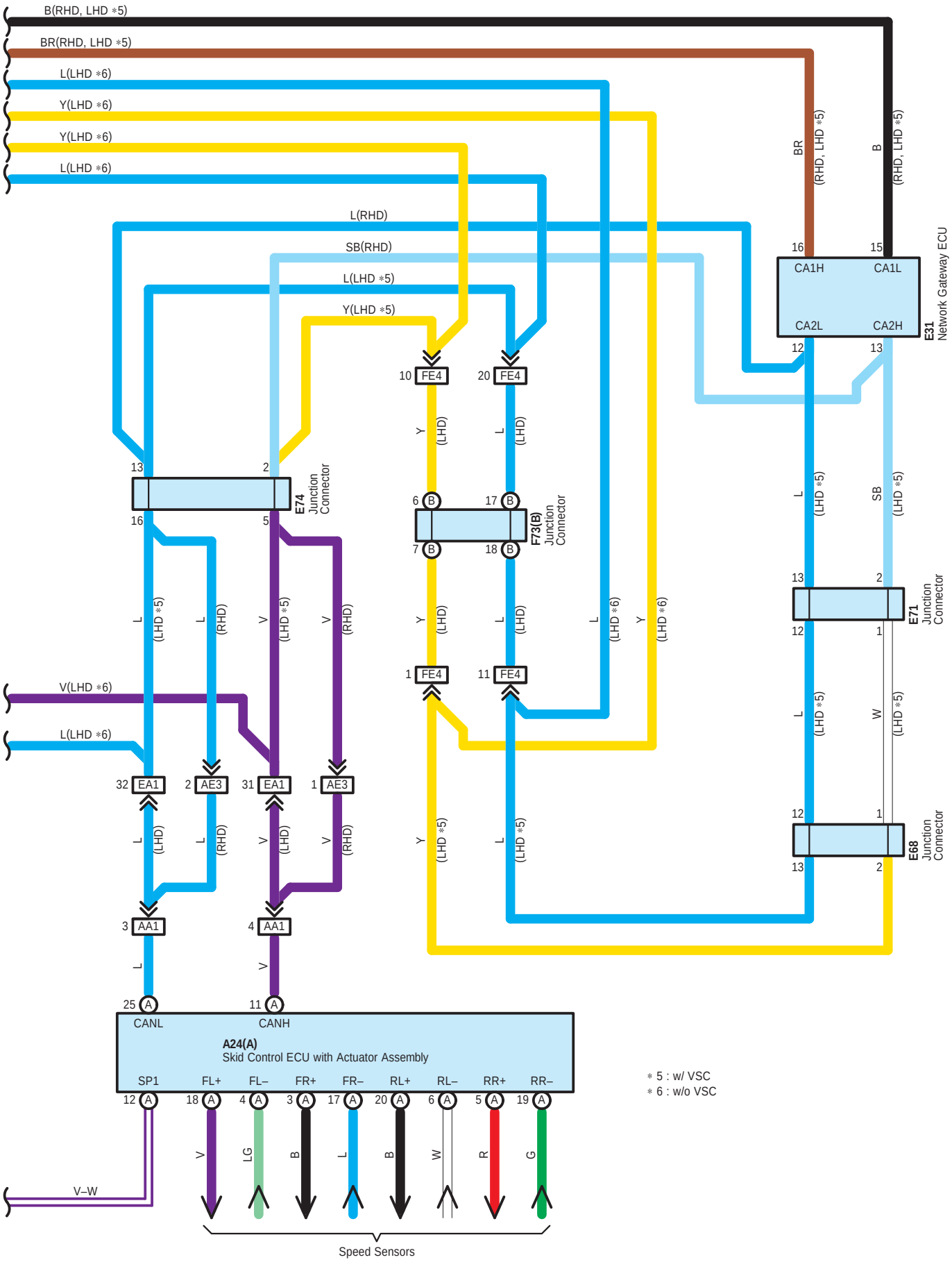
B(RHD, LHD *5)
BR(RHD, LHD *5)
L(LHD *6)
Y(LHD *6)
Y(LHD *6)
L(LHD *6)
L(RHD)
SB(RHD)
L(LHD *5)
Y(LHD *5)
V(LHD *6)
L(LHD *6)
V–W
E31 Network Gateway ECU
CA1H
CA1L
CA2L
CA2H
E74 Junction Connector
F73(B) Junction Connector
E71 Junction Connector
E68 Junction Connector
FE4
EA1
AE3
AA1
A24(A)
Skid Control ECU with Actuator Assembly
CANL
CANH
SP1
FL+
FL–
FR+
FR–
RL+
RL–
RR+
RR–
Speed Sensors
* 5 : w/ VSC
* 6 : w/o VSC

A 24
Black

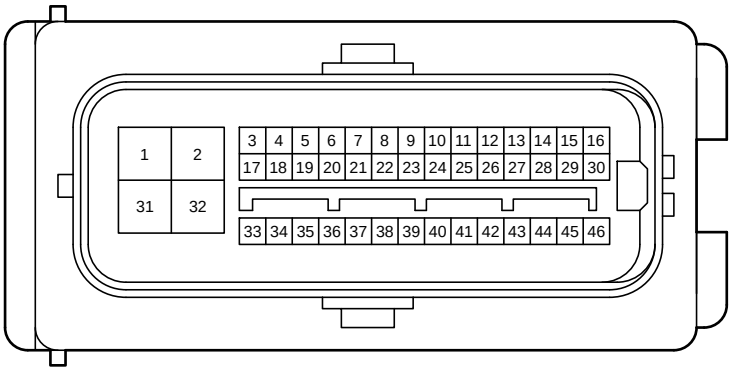

A 27
Black

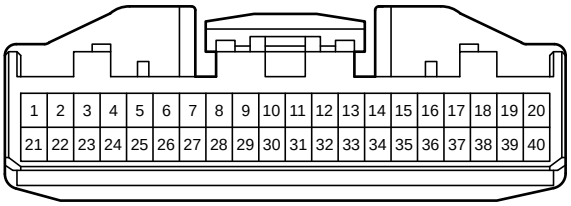

A 30
Gray

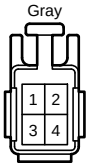

A 31
Black

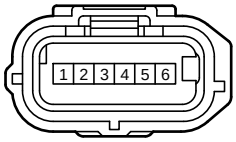

A 34
White

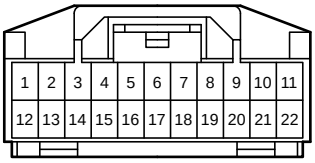

A 37
Blue

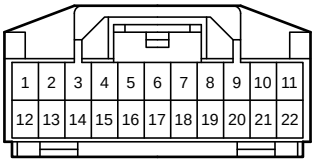

A 38
Black

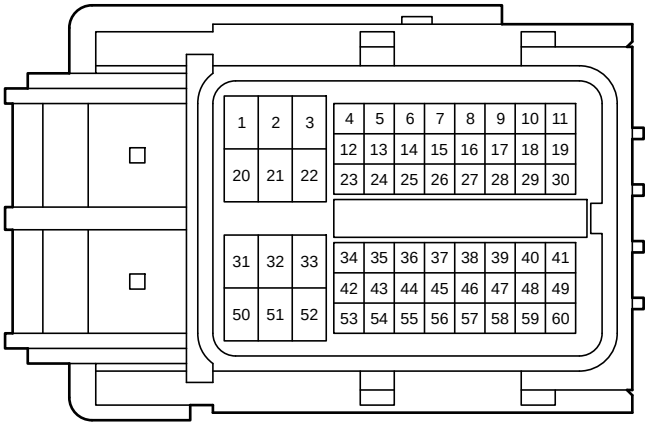

A 52
Black

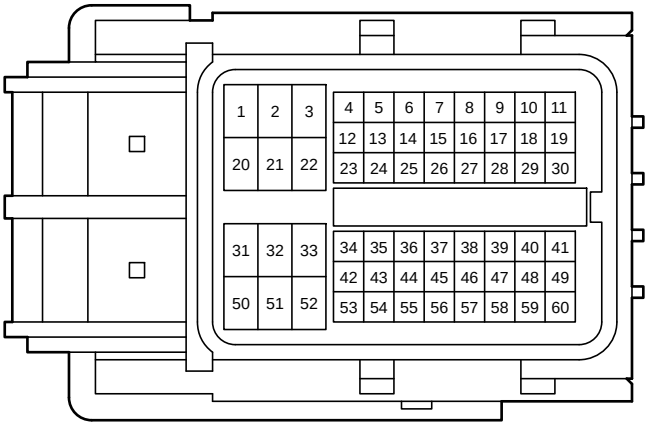

C 3
Black

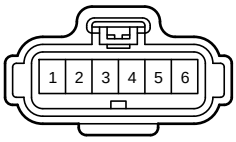

C 18
Dark Gray

C 20
Dark Gray

C 22
Dark Gray

C 23
Dark Gray

C 24
Gray

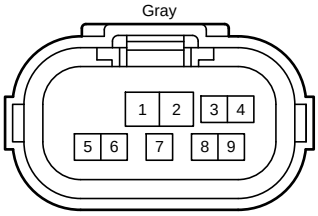

C 34
Gray

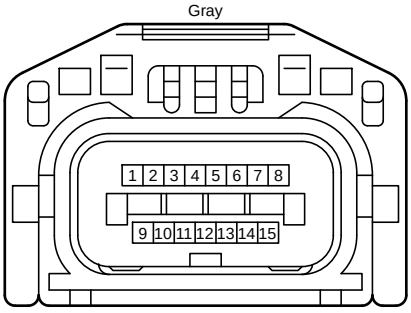

C 35
Black

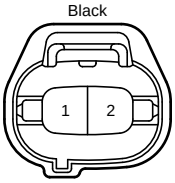

C 36
Black

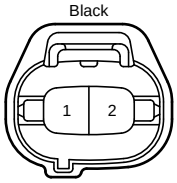

C 42
White

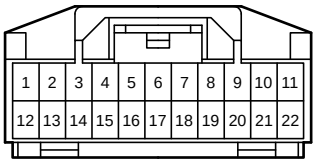

C 43
White

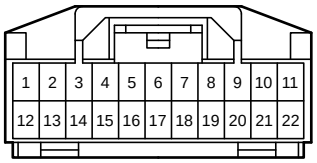

C 44
Blue

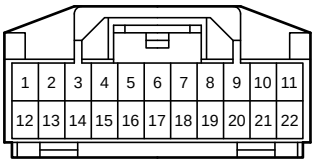

C 45
Black

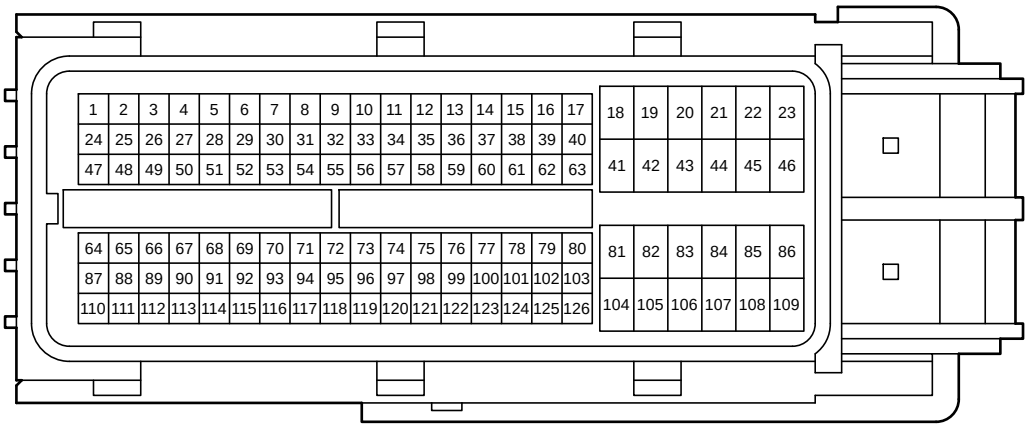

C 46
Black

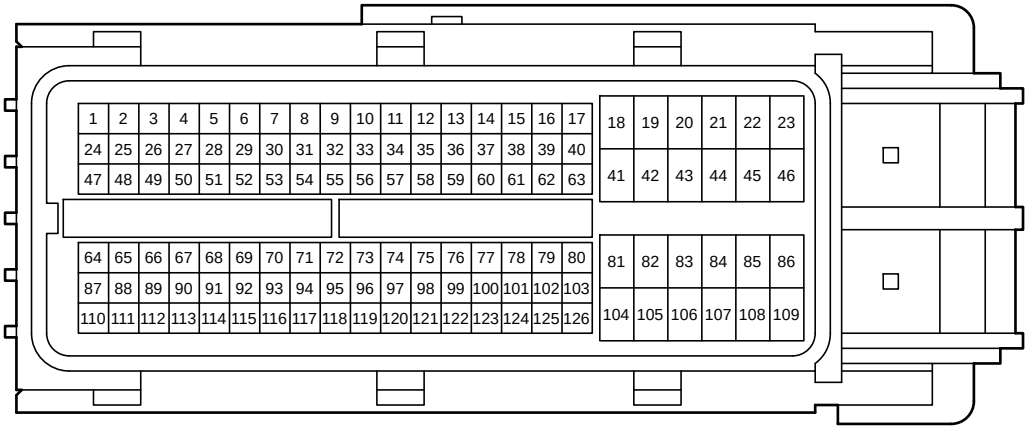

C 50
Black

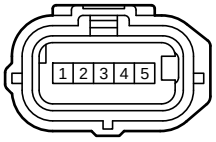

C 55
Black

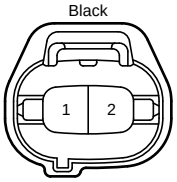

C 56
Dark Gray

C 59
Gray

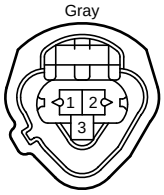

C 60
Black

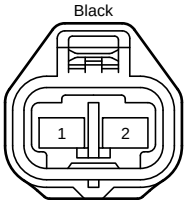

C 61
Black

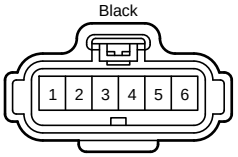

C 96
Gray

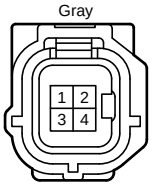

C 99
Black

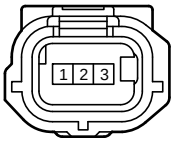

C100
Black

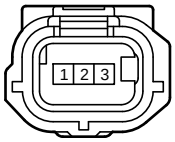

C101
Black

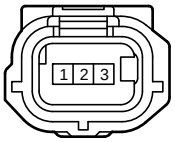

C102
Black

C103
Black

C114
Black

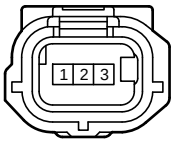

C121
Black

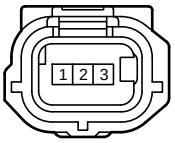

C122
Black

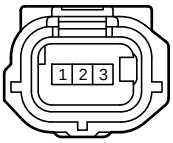

C125
Black

C126
Black

C129
Black

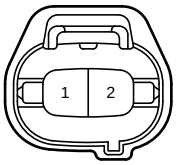

C136
Gray

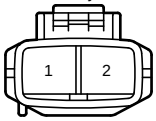

C137
Black

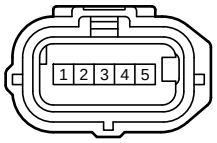

C138
Black

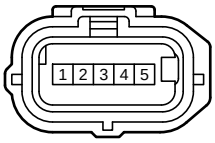

C139
Black

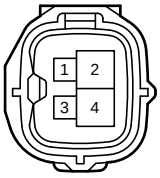

C168
Black

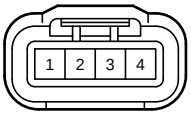

D 4
Black

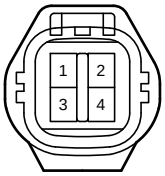

E 1
White

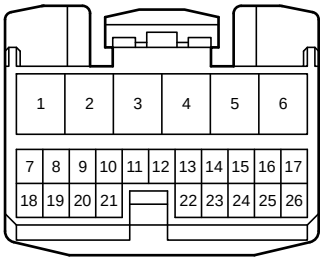

E 2
White

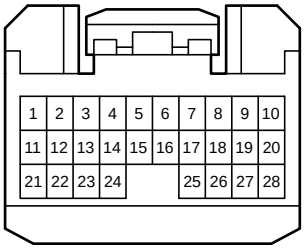

E 3
White

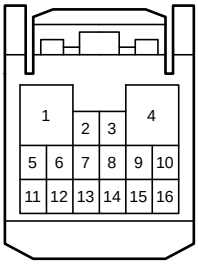

E 4
White

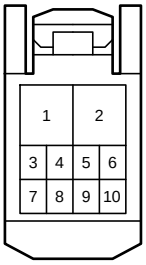

E 7
White

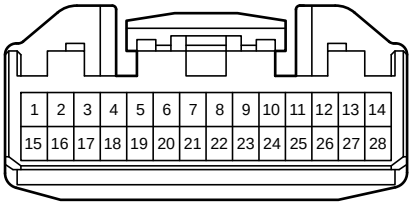

E 8
Black

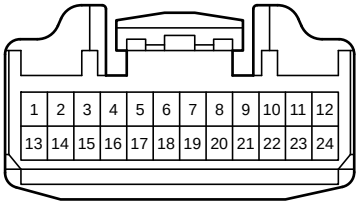

E 12
Black

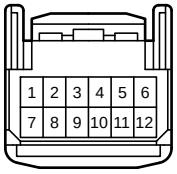

E 22
White

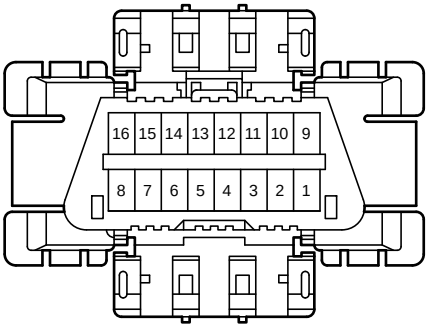

E 28

White

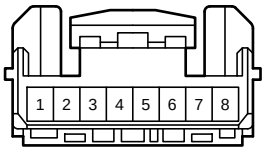

E 31

White

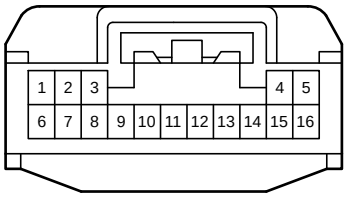

E 36

White

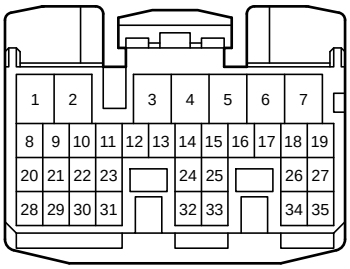

E 52

White

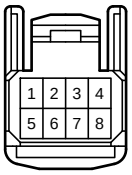

E 58

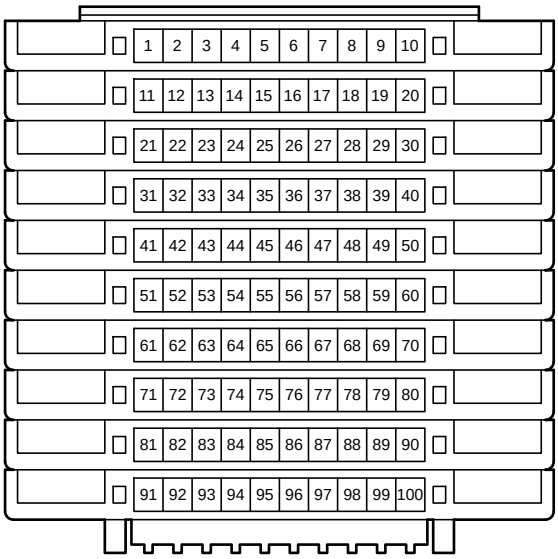

E 59

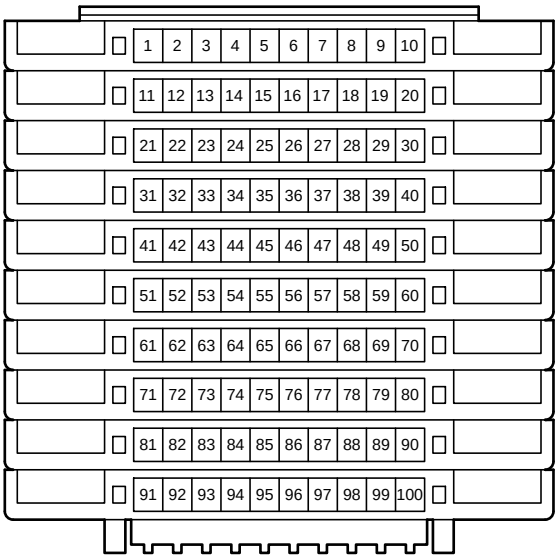

E 60

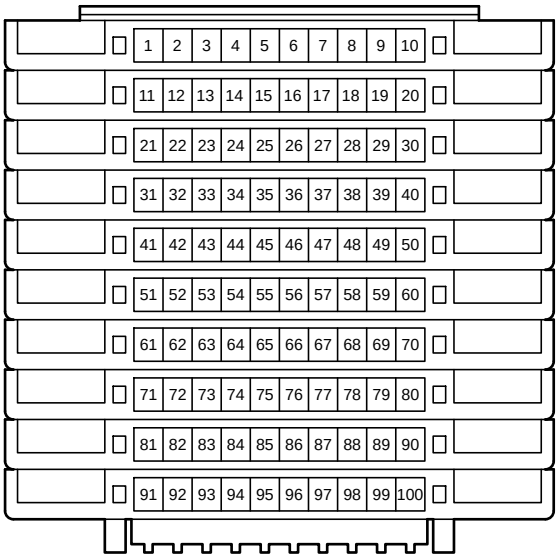

E 62

White

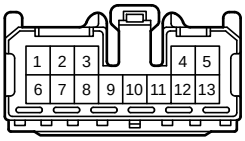

E 66

White

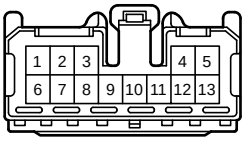

E 67
White

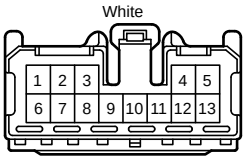

E 68
Gray

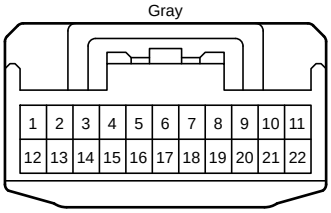

E 69
Gray

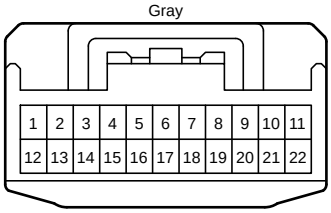

E 71
Gray

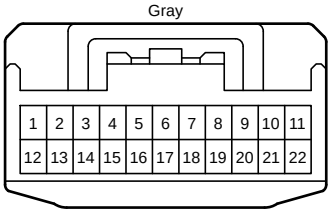

E 72
Gray

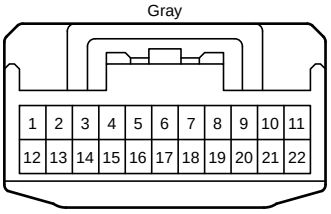

E 74
Gray

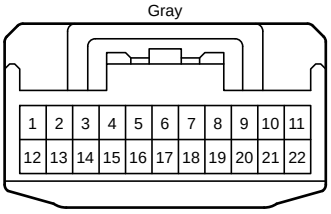

E 75
Gray

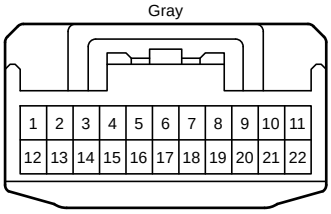

E 81
White

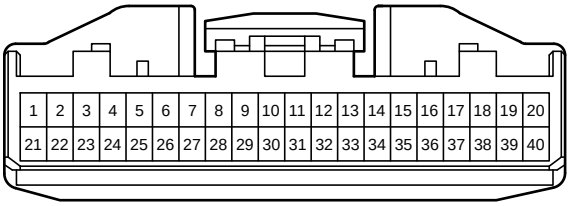

F 73
Blue

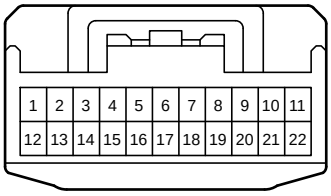

N 1
White

N 14
Black

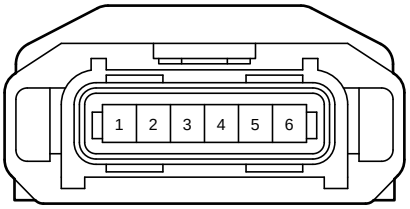

U 3
Gray

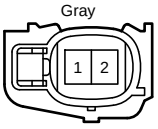

U 4
Black

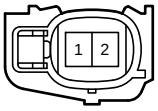

U 5
Gray

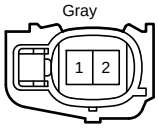

U 6
Black

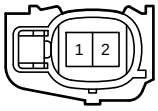

V 4
White

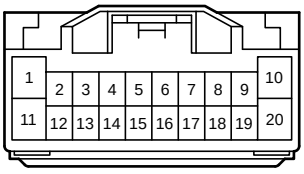

a 1
Black

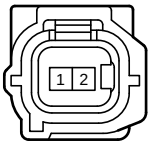

a 2
Black

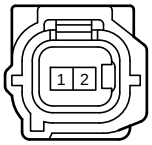

a 3
Black

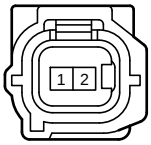

a 4
Black

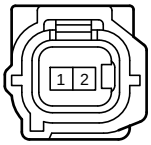

a 5
Black

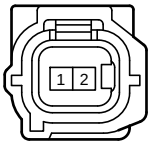

a 6
Black

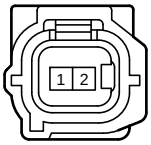

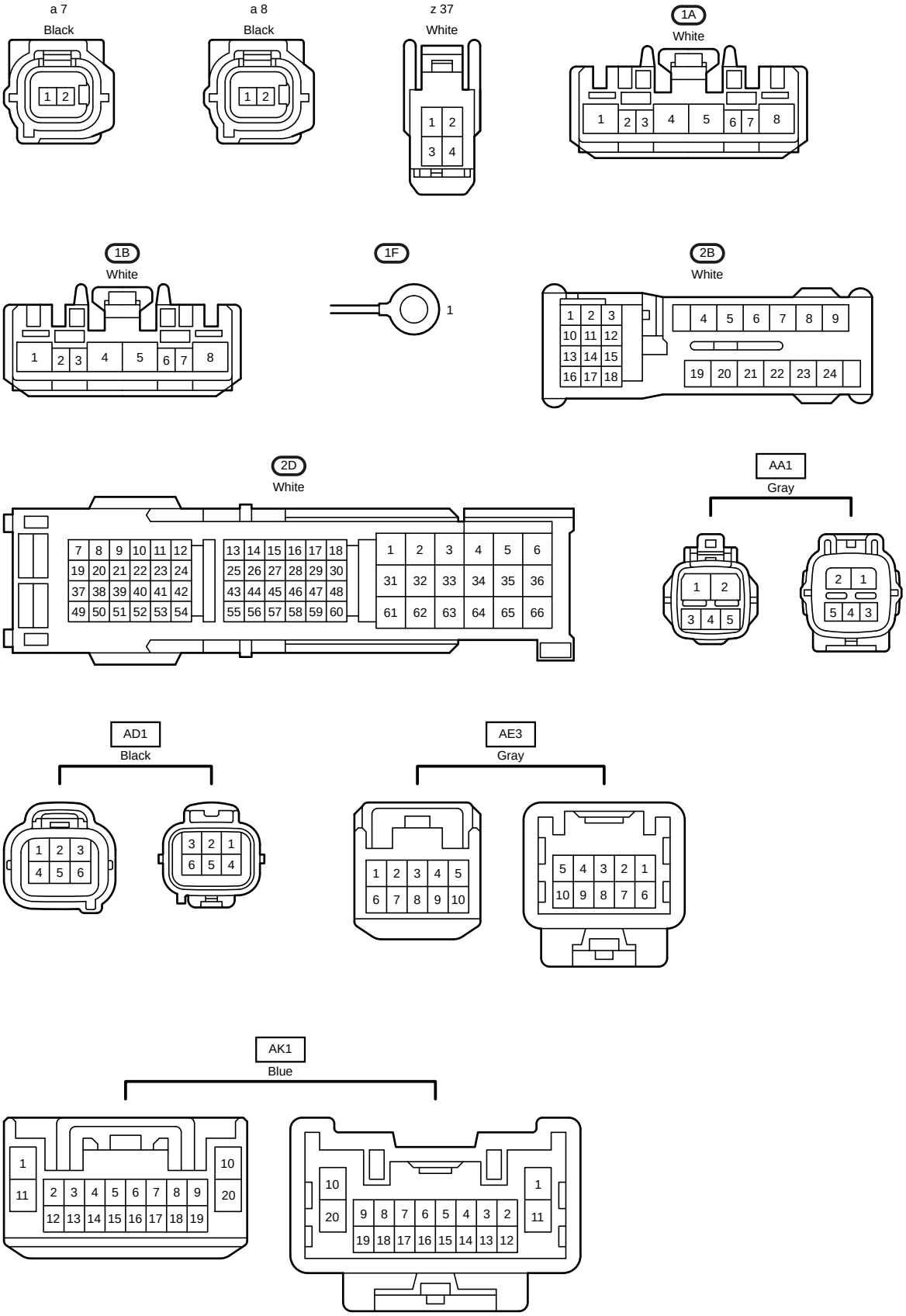
a 7
Black
a 8
Black
z 37
White
1A
White
1B
White
1F
2B
White
2D
White
AA1
Gray
AD1
Black
AE3
Gray
AK1
Blue

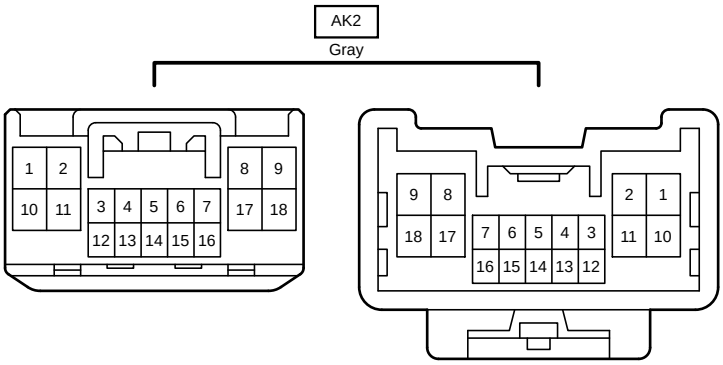
AK2
Gray
1 2 8 9
10 11 3 4 5 6 7 17 18
12 13 14 15 16
9 8 2 1
18 17 7 6 5 4 3 11 10
16 15 14 13 12

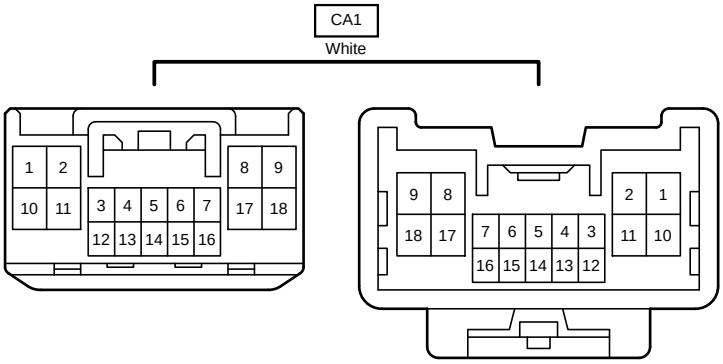
CA1
White
1 2 8 9
10 11 3 4 5 6 7 17 18
12 13 14 15 16
9 8 2 1
18 17 7 6 5 4 3 11 10
16 15 14 13 12

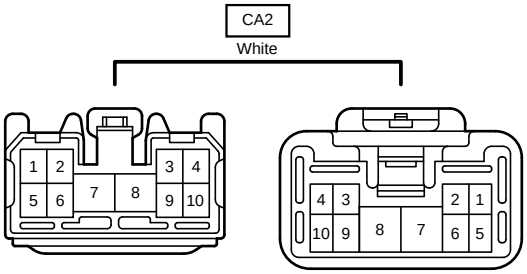
CA2
White
1 2 3 4
5 6 7 8 9 10
4 3 2 1
10 9 8 7 6 5

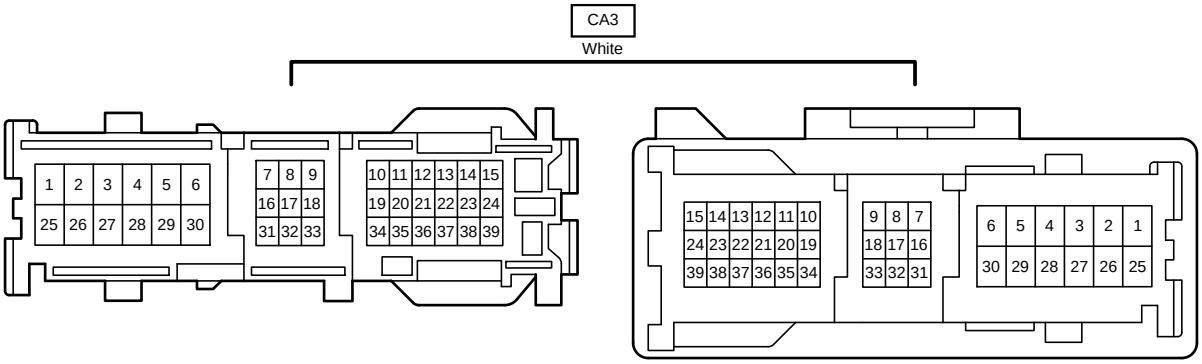
CA3
White
1 2 3 4 5 6 7 8 9 10 11 12 13 14 15
25 26 27 28 29 30 16 17 18 19 20 21 22 23 24
31 32 33 34 35 36 37 38 39
15 14 13 12 11 10 9 8 7 6 5 4 3 2 1
24 23 22 21 20 19 18 17 16 30 29 28 27 26 25
39 38 37 36 35 34 33 32 31

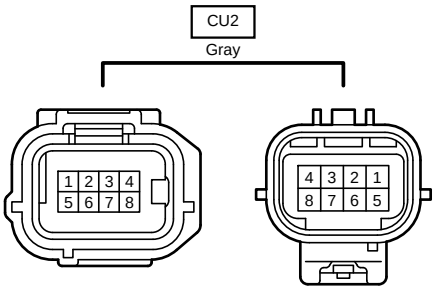
CU2
Gray
1 2 3 4
5 6 7 8
4 3 2 1
8 7 6 5

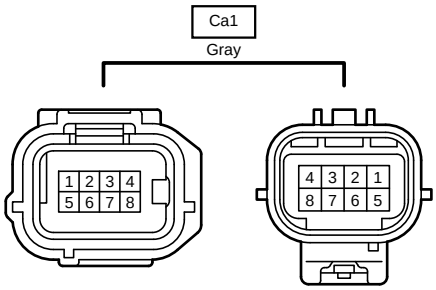
Ca1
Gray
1 2 3 4
5 6 7 8
4 3 2 1
8 7 6 5

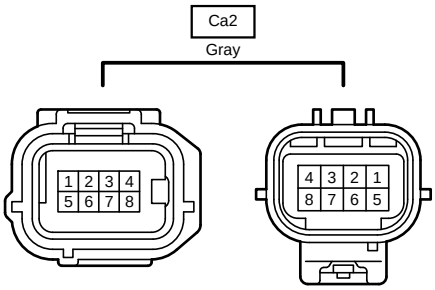
Ca2
Gray
1 2 3 4
5 6 7 8
4 3 2 1
8 7 6 5

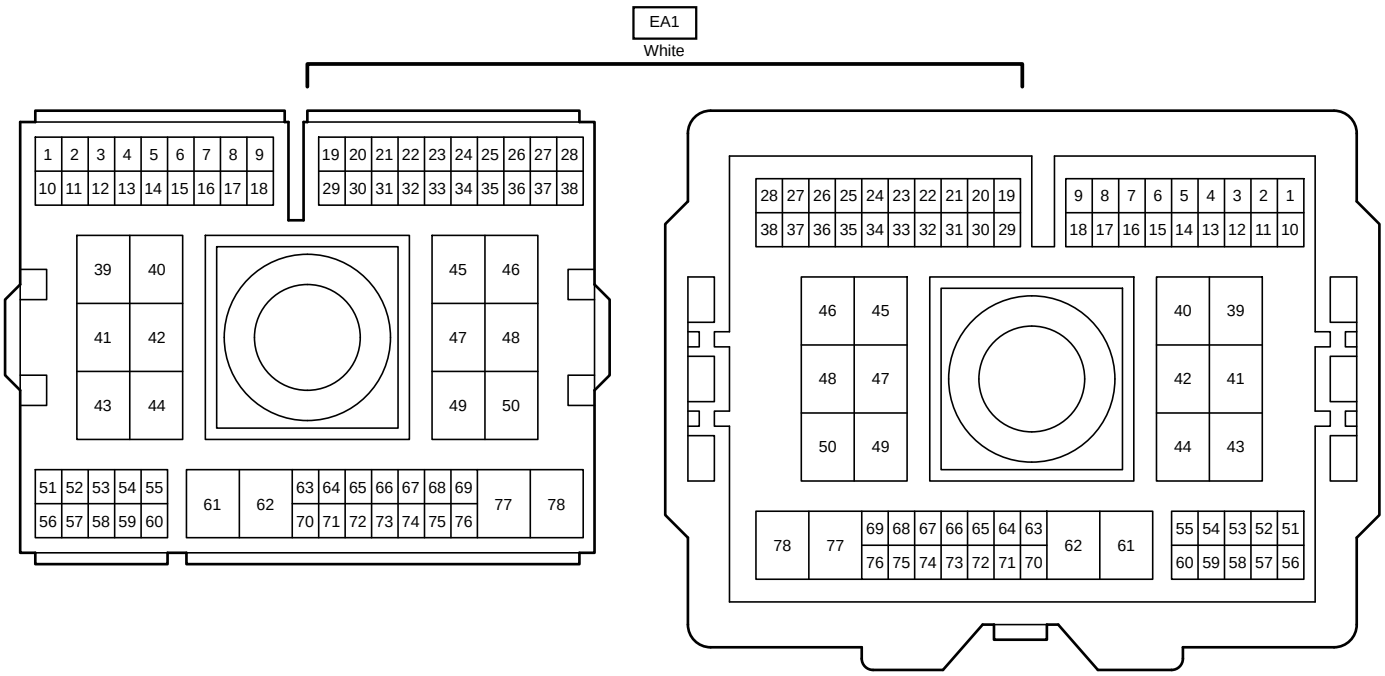
EA1
White
1 2 3 4 5 6 7 8 9
10 11 12 13 14 15 16 17 18
19 20 21 22 23 24 25 26 27 28
29 30 31 32 33 34 35 36 37 38
39 40
41 42
43 44
45 46
47 48
49 50
51 52 53 54 55
56 57 58 59 60
61 62
63 64 65 66 67 68 69
70 71 72 73 74 75 76
77 78
28 27 26 25 24 23 22 21 20 19
38 37 36 35 34 33 32 31 30 29
9 8 7 6 5 4 3 2 1
18 17 16 15 14 13 12 11 10
46 45
48 47
50 49
40 39
42 41
44 43
78 77
69 68 67 66 65 64 63
76 75 74 73 72 71 70
62 61
55 54 53 52 51
60 59 58 57 56

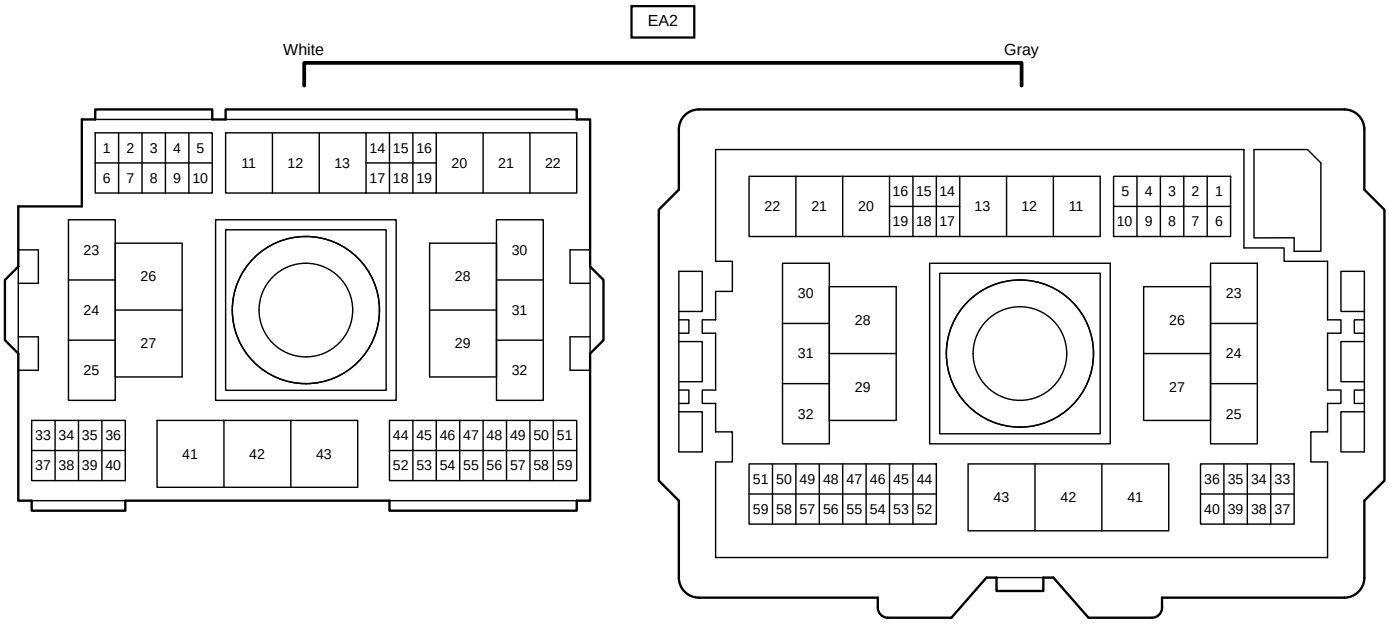
EA2
White
Gray
1 2 3 4 5
6 7 8 9 10
11 12 13
14 15 16
17 18 19
20 21 22
23 26
24 27
25
28 30
29 31
32
33 34 35 36
37 38 39 40
41 42 43
44 45 46 47 48 49 50 51
52 53 54 55 56 57 58 59
22 21 20
16 15 14
19 18 17
13 12 11
5 4 3 2 1
10 9 8 7 6
30 28
31 29
32
26 23
27 24
25
51 50 49 48 47 46 45 44
59 58 57 56 55 54 53 52
43 42 41
36 35 34 33
40 39 38 37

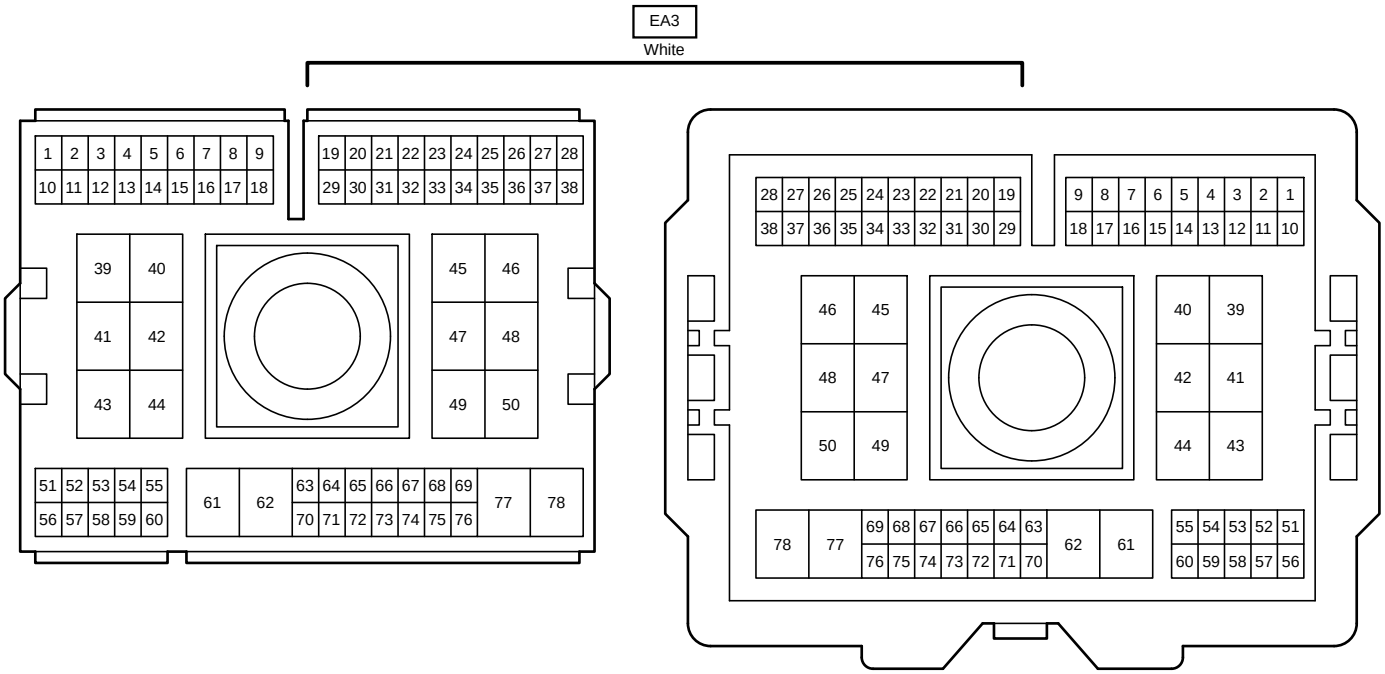
EA3
White

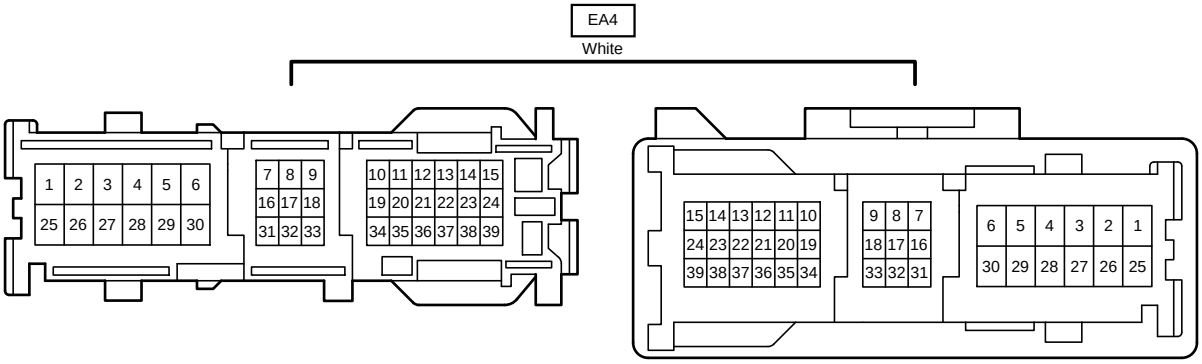
EA4
White

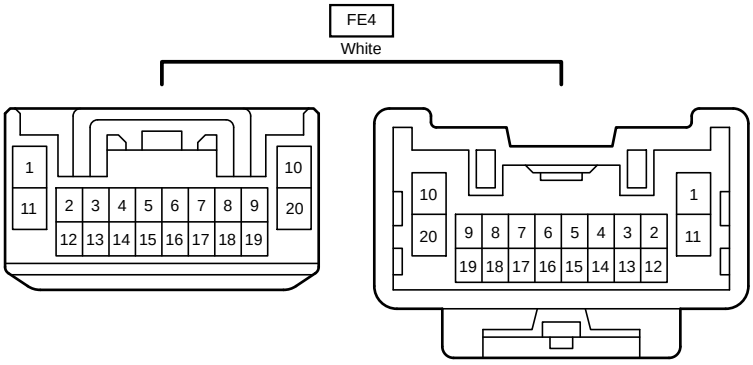
FE4
White

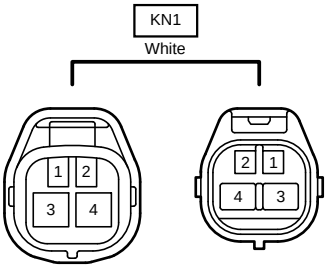
KN1
White

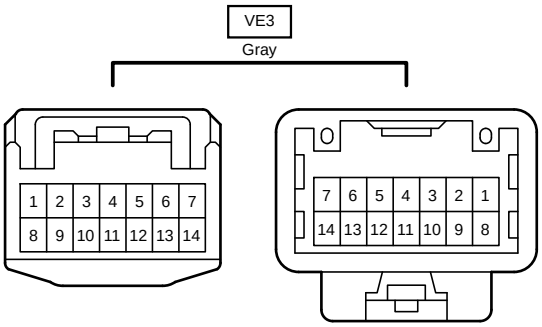
VE3
Gray
1 2 3 4 5 6 7
8 9 10 11 12 13 14
7 6 5 4 3 2 1
14 13 12 11 10 9 8