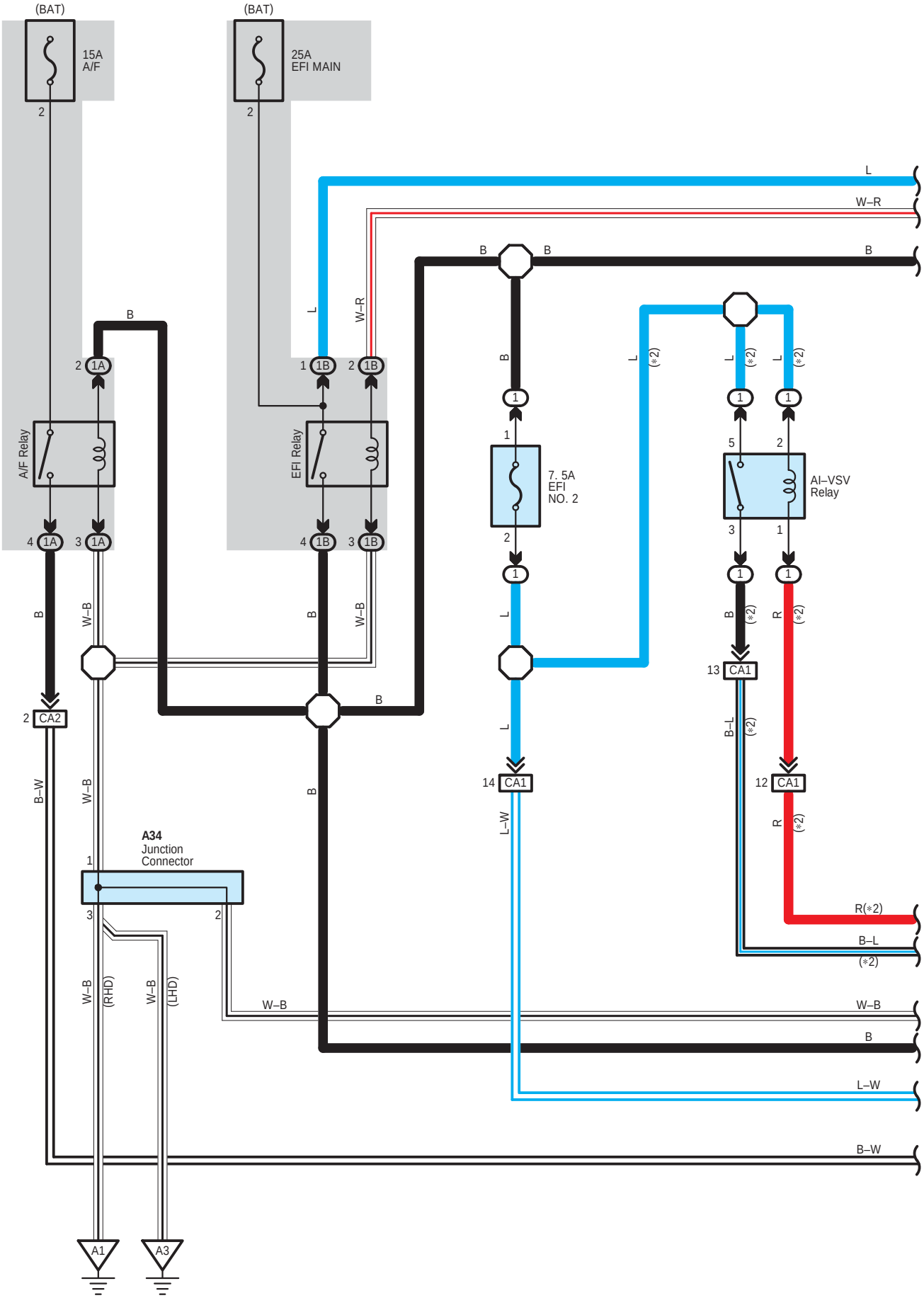
(BAT)
15A
A/F
(BAT)
25A
EFI MAIN
A/F Relay
EFI Relay
7. 5A
EFI
NO. 2
AI–VSV
Relay
A34
Junction
Connector
CA2
CA1
(RHD)
(LHD)
A1
A3
L
W–R
B
W–B
B–W
L–W
B–L
R
R(*2)
(*2)

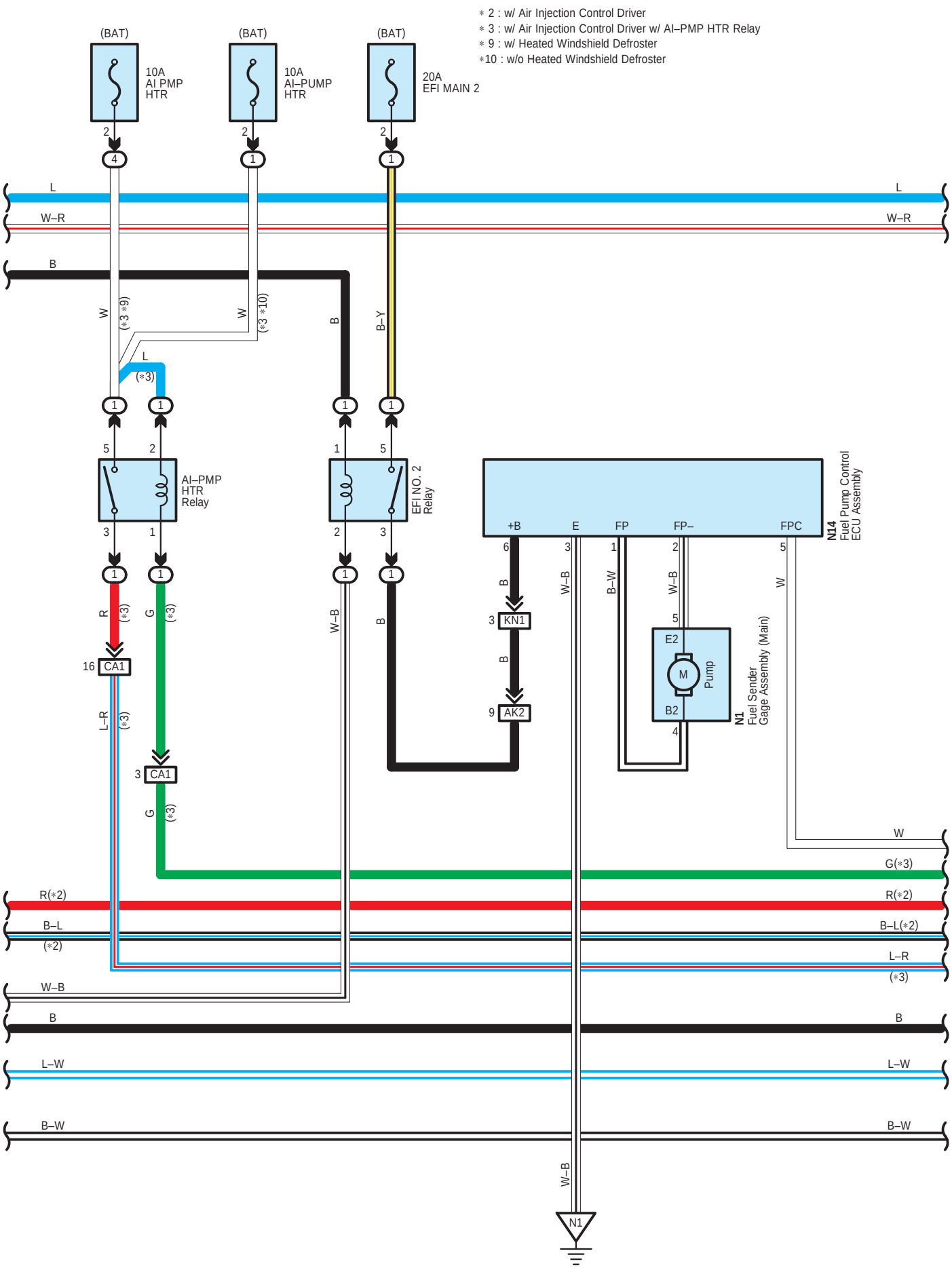
∗ 2 : w/ Air Injection Control Driver
∗ 3 : w/ Air Injection Control Driver w/ AI–PMP HTR Relay
∗ 9 : w/ Heated Windshield Defroster
∗10 : w/o Heated Windshield Defroster
(BAT)
10A
AI PMP
HTR
10A
AI–PUMP
HTR
20A
EFI MAIN 2
AI–PMP
HTR
Relay
EFI NO. 2
Relay
+B
E
FP
FP–
FPC
N14
Fuel Pump Control
ECU Assembly
KN1
AK2
CA1
E2
M
Pump
B2
N1
Fuel Sender
Gage Assembly (Main)
N1

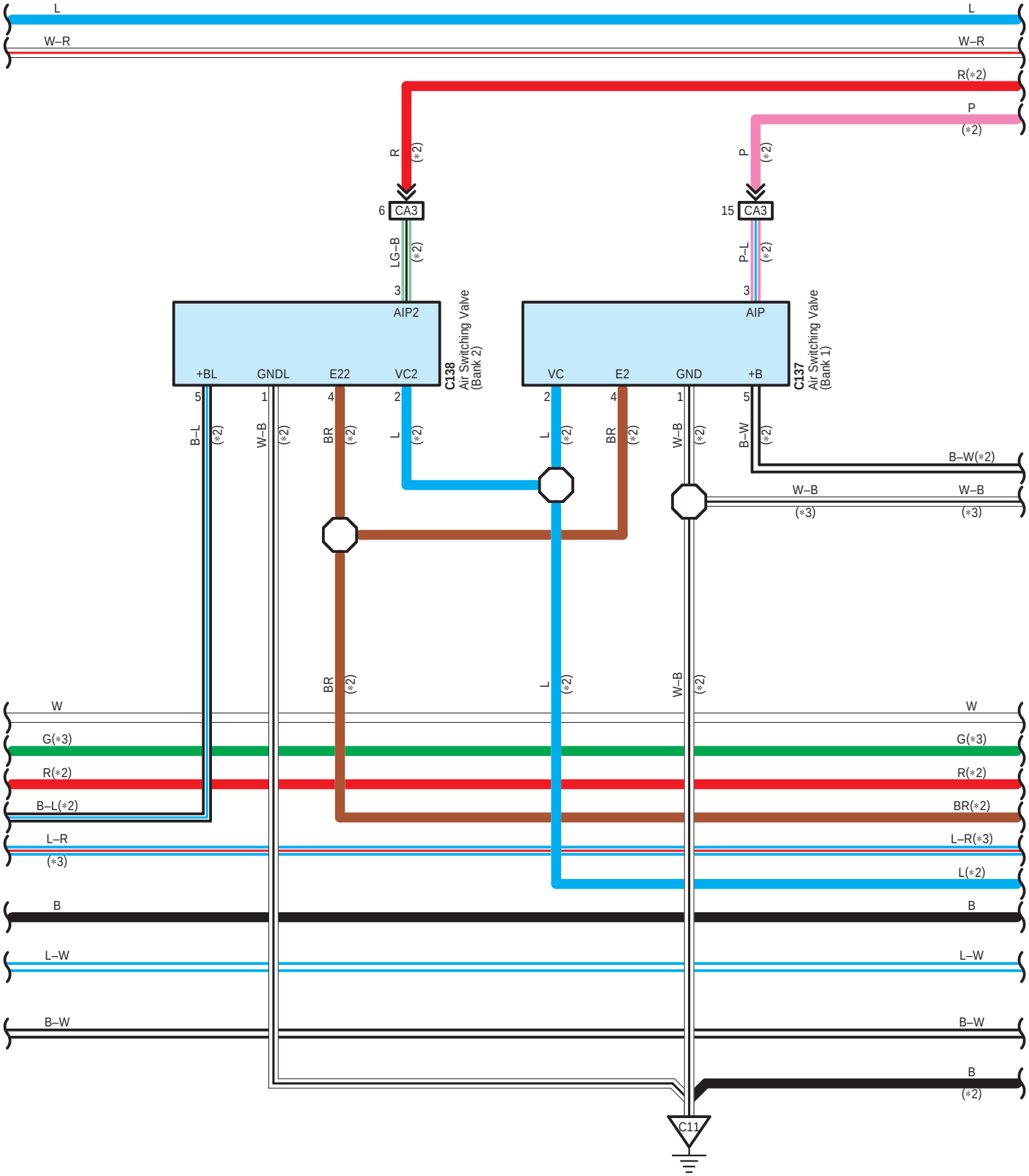
L
W–R
R(*2)
P
(*2)
R
(*2)
P
(*2)
6
CA3
15
CA3
LG–B
(*2)
P–L
(*2)
3
AIP2
3
AIP
C138
Air Switching Valve
(Bank 2)
C137
Air Switching Valve
(Bank 1)
+BL
GNDL
E22
VC2
VC
E2
GND
+B
5
1
4
2
2
4
1
5
B–L
(*2)
W–B
(*2)
BR
(*2)
L
(*2)
L
(*2)
BR
(*2)
W–B
(*2)
B–W
(*2)
B–W(*2)
W–B
(*3)
W–B
(*3)
BR
(*2)
L
(*2)
W–B
(*2)
W
G(*3)
R(*2)
B–L(*2)
L–R
(*3)
B
L–W
B–W
W
G(*3)
R(*2)
BR(*2)
L–R(*3)
L(*2)
B
L–W
B–W
B
(*2)
C11

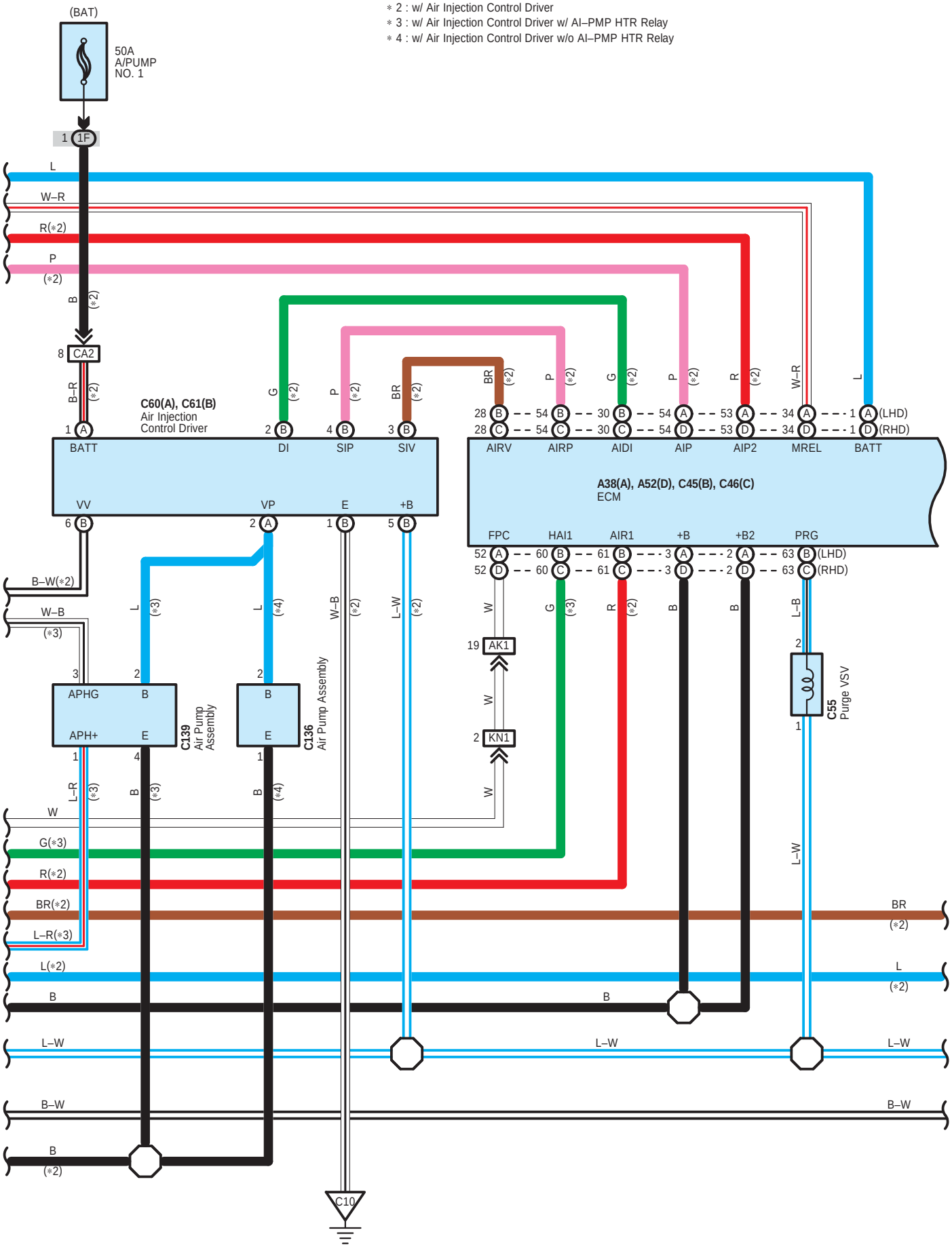
∗ 2 : w/ Air Injection Control Driver
∗ 3 : w/ Air Injection Control Driver w/ AI–PMP HTR Relay
∗ 4 : w/ Air Injection Control Driver w/o AI–PMP HTR Relay
(BAT)
50A
A/PUMP
NO. 1
1F
CA2
C60(A), C61(B)
Air Injection
Control Driver
BATT
DI
SIP
SIV
VV
VP
E
+B
A38(A), A52(D), C45(B), C46(C)
ECM
AIRV
AIRP
AIDI
AIP
AIP2
MREL
BATT
FPC
HAI1
AIR1
+B
+B2
PRG
(LHD)
(RHD)
AK1
KN1
APHG
APH+
C139
Air Pump
Assembly
C136
Air Pump Assembly
C55
Purge VSV
C10

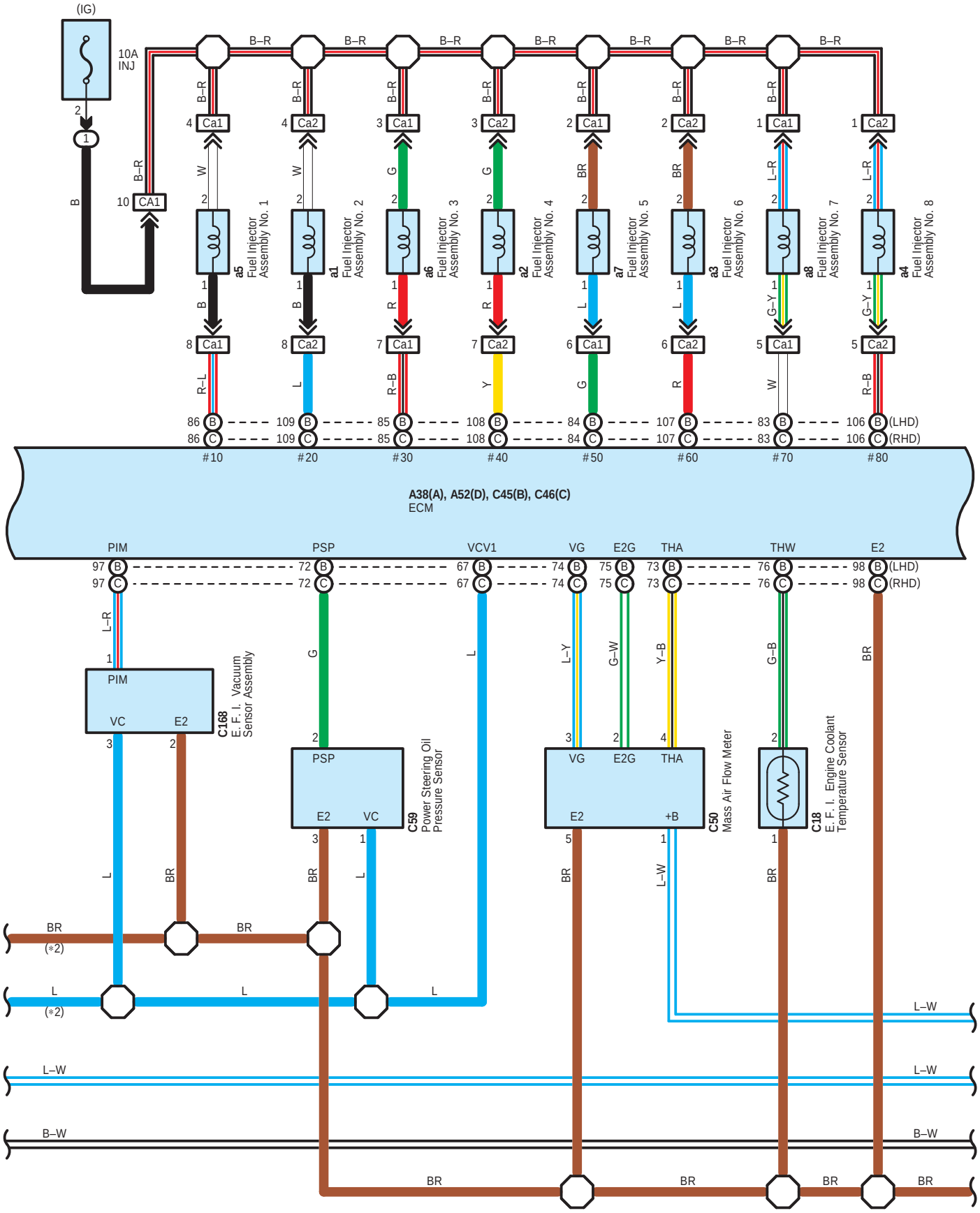
(IG)
10A
INJ
CA1
a5 Fuel Injector Assembly No. 1
a1 Fuel Injector Assembly No. 2
a6 Fuel Injector Assembly No. 3
a2 Fuel Injector Assembly No. 4
a7 Fuel Injector Assembly No. 5
a3 Fuel Injector Assembly No. 6
a8 Fuel Injector Assembly No. 7
a4 Fuel Injector Assembly No. 8
#10
#20
#30
#40
#50
#60
#70
#80
(LHD)
(RHD)
A38(A), A52(D), C45(B), C46(C)
ECM
PIM
PSP
VCV1
VG
E2G
THA
THW
E2
C168 E. F. I. Vacuum Sensor Assembly
C59 Power Steering Oil Pressure Sensor
C50 Mass Air Flow Meter
C18 E. F. I. Engine Coolant Temperature Sensor
VC
+B
(*2)

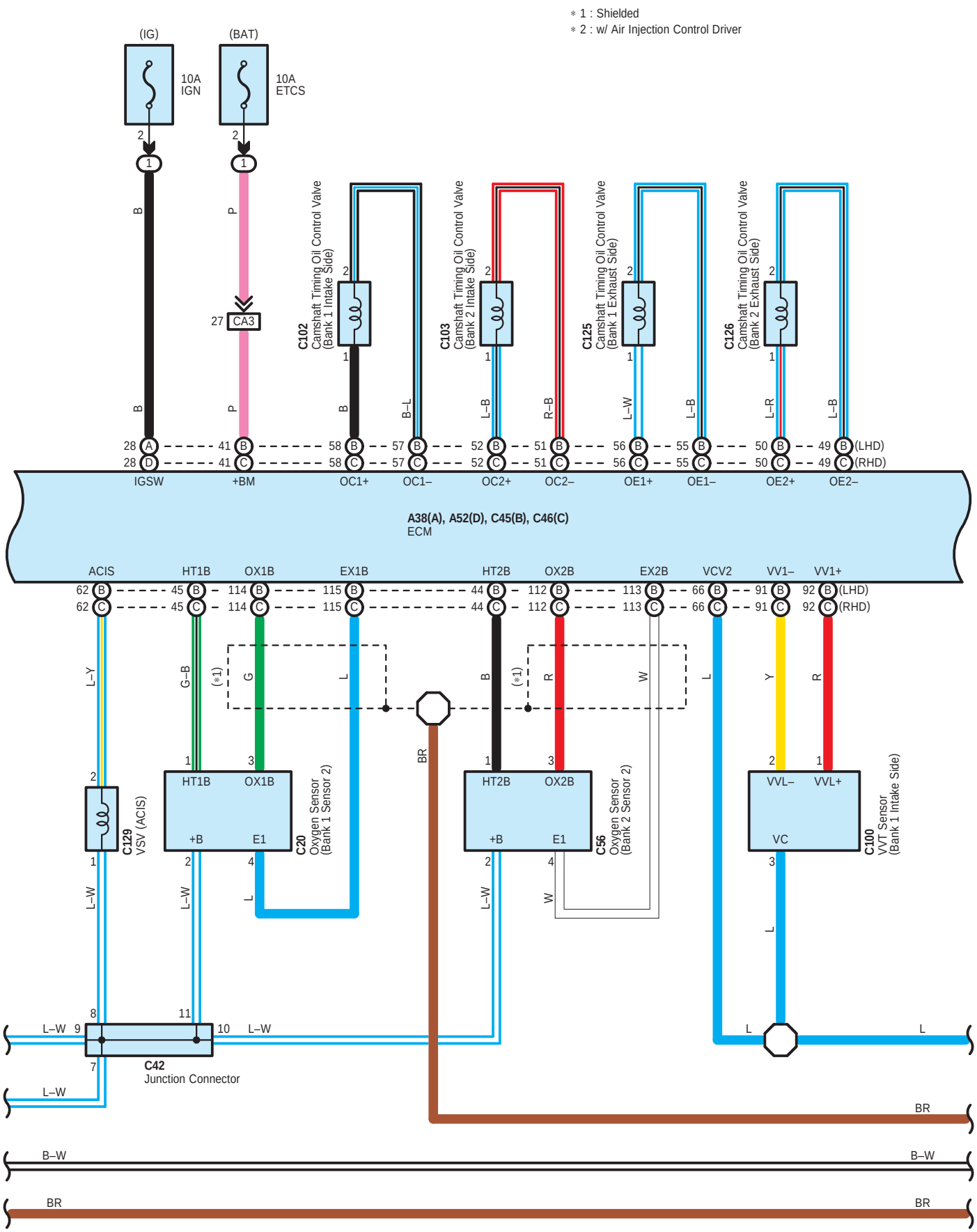
* 1 : Shielded
* 2 : w/ Air Injection Control Driver
(IG)
(BAT)
10A IGN
10A ETCS
27 CA3
C102 Camshaft Timing Oil Control Valve (Bank 1 Intake Side)
C103 Camshaft Timing Oil Control Valve (Bank 2 Intake Side)
C125 Camshaft Timing Oil Control Valve (Bank 1 Exhaust Side)
C126 Camshaft Timing Oil Control Valve (Bank 2 Exhaust Side)
IGSW
+BM
OC1+
OC1–
OC2+
OC2–
OE1+
OE1–
OE2+
OE2–
(LHD)
(RHD)
A38(A), A52(D), C45(B), C46(C)
ECM
ACIS
HT1B
OX1B
EX1B
HT2B
OX2B
EX2B
VCV2
VV1–
VV1+
C129 VSV (ACIS)
C20 Oxygen Sensor (Bank 1 Sensor 2)
C56 Oxygen Sensor (Bank 2 Sensor 2)
C100 VVT Sensor (Bank 1 Intake Side)
VVL–
VVL+
VC
+B
E1
C42 Junction Connector

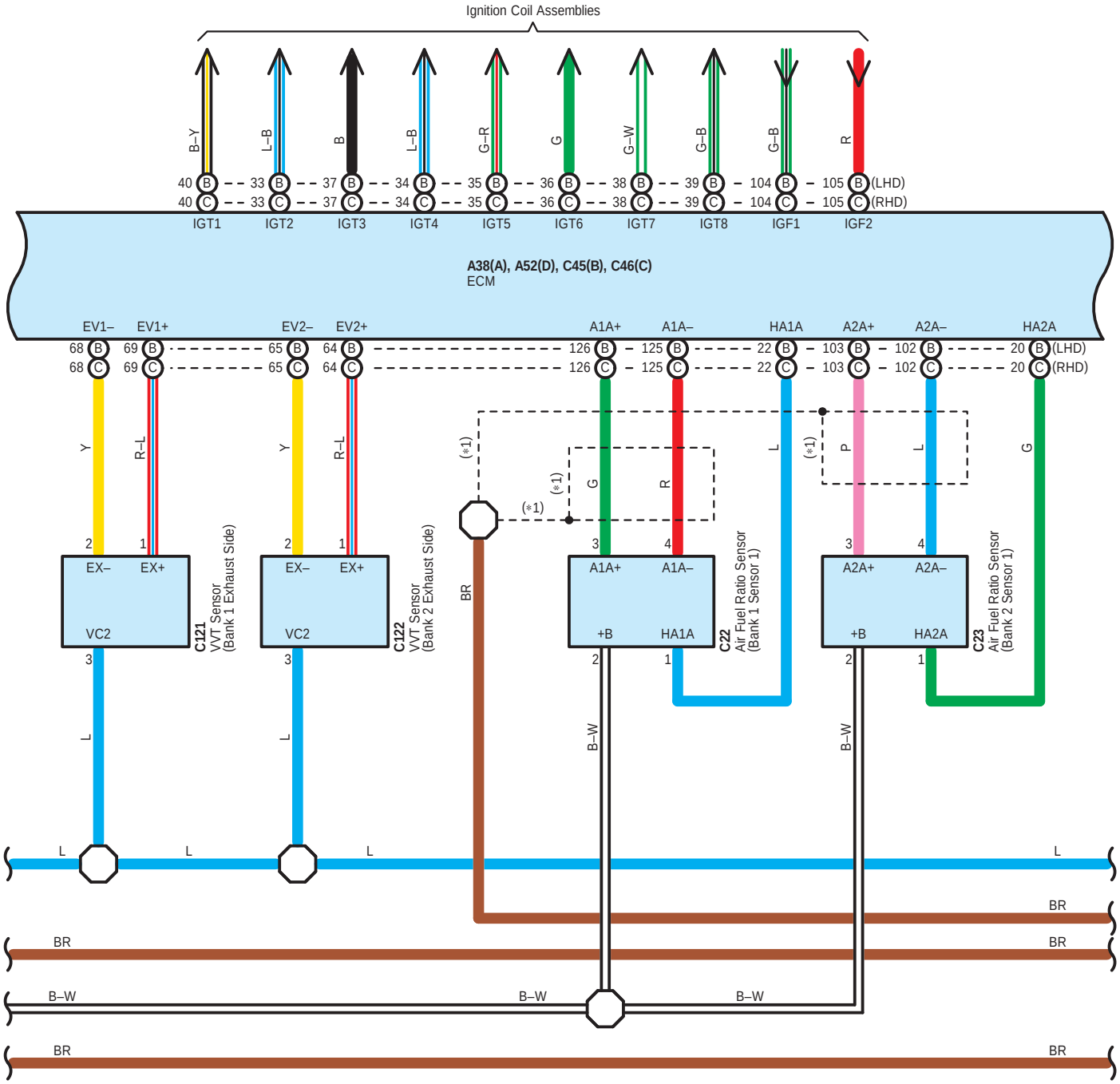
Ignition Coil Assemblies
B–Y
L–B
B
L–B
G–R
G
G–W
G–B
G–B
R
40 B
40 C
33 B
33 C
37 B
37 C
34 B
34 C
35 B
35 C
36 B
36 C
38 B
38 C
39 B
39 C
104 B
104 C
105 B (LHD)
105 C (RHD)
IGT1
IGT2
IGT3
IGT4
IGT5
IGT6
IGT7
IGT8
IGF1
IGF2
A38(A), A52(D), C45(B), C46(C)
ECM
EV1–
EV1+
EV2–
EV2+
A1A+
A1A–
HA1A
A2A+
A2A–
HA2A
68 B
68 C
69 B
69 C
65 B
65 C
64 B
64 C
126 B
126 C
125 B
125 C
22 B
22 C
103 B
103 C
102 B
102 C
20 B (LHD)
20 C (RHD)
Y
R–L
Y
R–L
(*1)
(*1)
(*1)
G
R
L
(*1)
P
L
G
2
1
EX–
EX+
VC2
3
C121
VVT Sensor
(Bank 1 Exhaust Side)
2
1
EX–
EX+
VC2
3
C122
VVT Sensor
(Bank 2 Exhaust Side)
BR
3
4
A1A+
A1A–
+B
HA1A
2
1
C22
Air Fuel Ratio Sensor
(Bank 1 Sensor 1)
3
4
A2A+
A2A–
+B
HA2A
2
1
C23
Air Fuel Ratio Sensor
(Bank 2 Sensor 1)
L
B–W
B–W
L
L
L
L
L
BR
BR
BR
BR
B–W
B–W
B–W
BR
BR

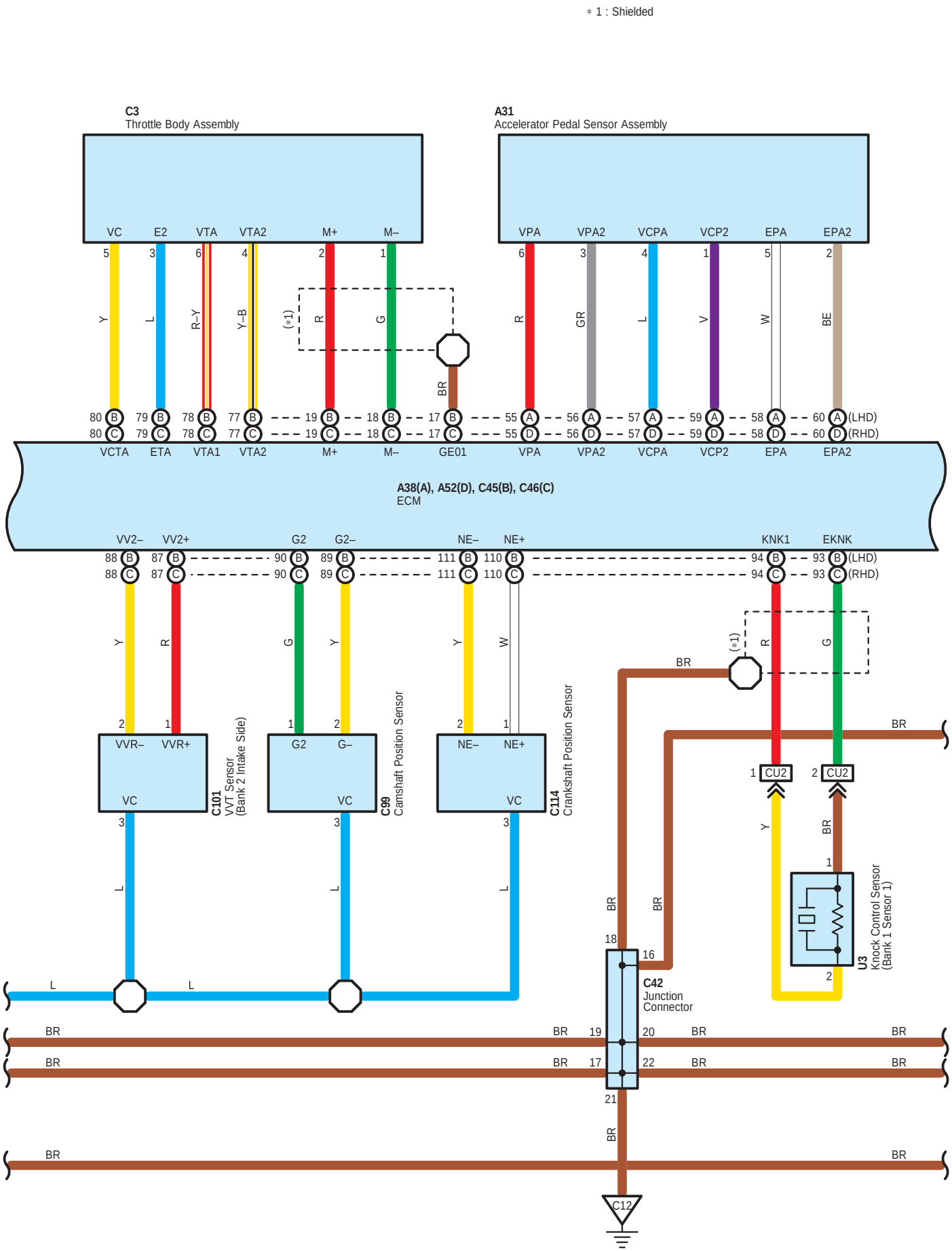
∗1 : Shielded
C3
Throttle Body Assembly
A31
Accelerator Pedal Sensor Assembly
VC
E2
VTA
VTA2
M+
M–
VPA
VPA2
VCPA
VCP2
EPA
EPA2
VCTA
ETA
VTA1
GE01
(LHD)
(RHD)
A38(A), A52(D), C45(B), C46(C)
ECM
VV2–
VV2+
G2
G2–
NE–
NE+
KNK1
EKNK
VVR–
VVR+
C101
VVT Sensor
(Bank 2 Intake Side)
C99
Camshaft Position Sensor
C114
Crankshaft Position Sensor
CU2
U3
Knock Control Sensor
(Bank 1 Sensor 1)
C42
Junction
Connector
C12

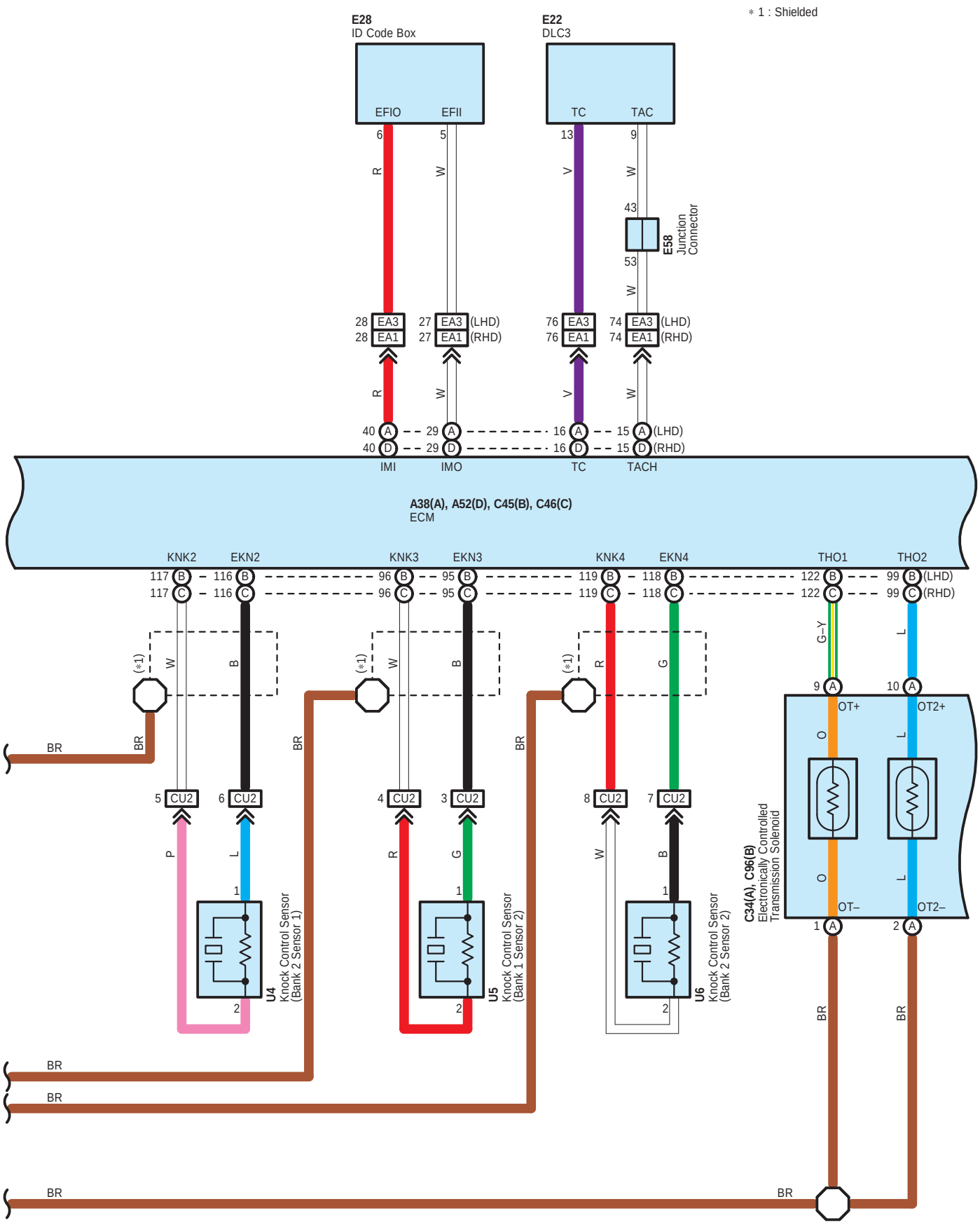
∗1 : Shielded
E28
ID Code Box
EFIO
EFII
E22
DLC3
TC
TAC
E58
Junction Connector
EA3
EA1
(LHD)
(RHD)
IMI
IMO
TC
TACH
A38(A), A52(D), C45(B), C46(C)
ECM
KNK2
EKN2
KNK3
EKN3
KNK4
EKN4
THO1
THO2
CU2
U4
Knock Control Sensor (Bank 2 Sensor 1)
U5
Knock Control Sensor (Bank 1 Sensor 2)
U6
Knock Control Sensor (Bank 2 Sensor 2)
C34(A), C96(B)
Electronically Controlled Transmission Solenoid
OT+
OT2+
OT–
OT2–
BR

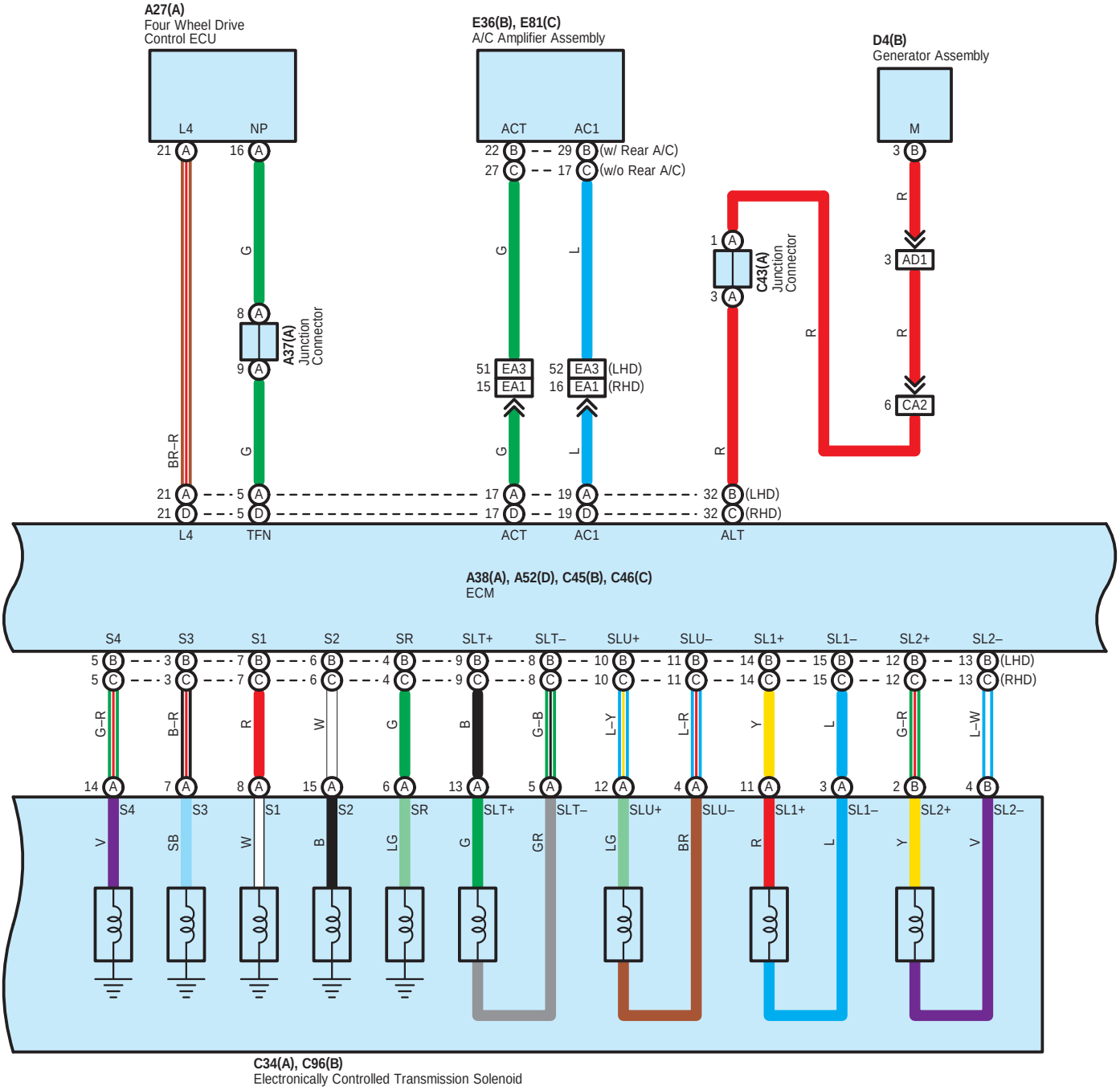
A27(A)
Four Wheel Drive Control ECU
E36(B), E81(C)
A/C Amplifier Assembly
D4(B)
Generator Assembly
L4
NP
ACT
AC1
M
(w/ Rear A/C)
(w/o Rear A/C)
A37(A) Junction Connector
C43(A) Junction Connector
EA3
EA1
(LHD)
(RHD)
AD1
CA2
BR–R
TFN
ALT
A38(A), A52(D), C45(B), C46(C)
ECM
S4
S3
S1
S2
SR
SLT+
SLT–
SLU+
SLU–
SL1+
SL1–
SL2+
SL2–
C34(A), C96(B)
Electronically Controlled Transmission Solenoid

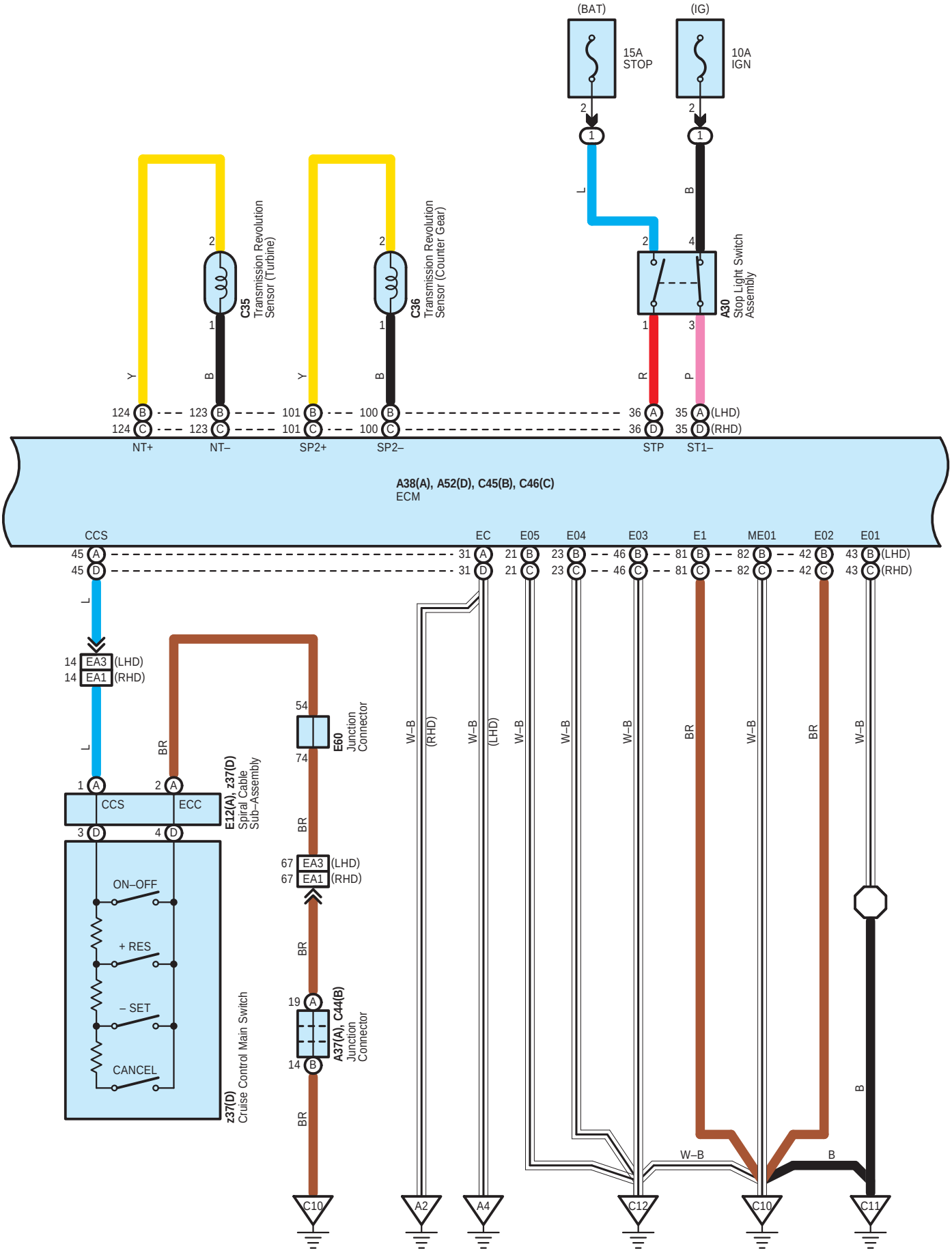
(BAT)
(IG)
15A
STOP
10A
IGN
C35
Transmission Revolution
Sensor (Turbine)
C36
Transmission Revolution
Sensor (Counter Gear)
A30
Stop Light Switch
Assembly
124 B
124 C
123 B
123 C
101 B
101 C
100 B
100 C
36 A
36 D
35 A (LHD)
35 D (RHD)
NT+
NT–
SP2+
SP2–
STP
ST1–
A38(A), A52(D), C45(B), C46(C)
ECM
CCS
EC
E05
E04
E03
E1
ME01
E02
E01
45 A
45 D
31 A
31 D
21 B
21 C
23 B
23 C
46 B
46 C
81 B
81 C
82 B
82 C
42 B
42 C
43 B (LHD)
43 C (RHD)
14 EA3 (LHD)
14 EA1 (RHD)
E12(A), z37(D)
Spiral Cable
Sub–Assembly
CCS
ECC
ON–OFF
+ RES
– SET
CANCEL
z37(D)
Cruise Control Main Switch
54
74
E60
Junction
Connector
67 EA3 (LHD)
67 EA1 (RHD)
19 A
14 B
A37(A), C44(B)
Junction
Connector
W–B
(RHD)
(LHD)
BR
L
B
C10
A2
A4
C12
C11

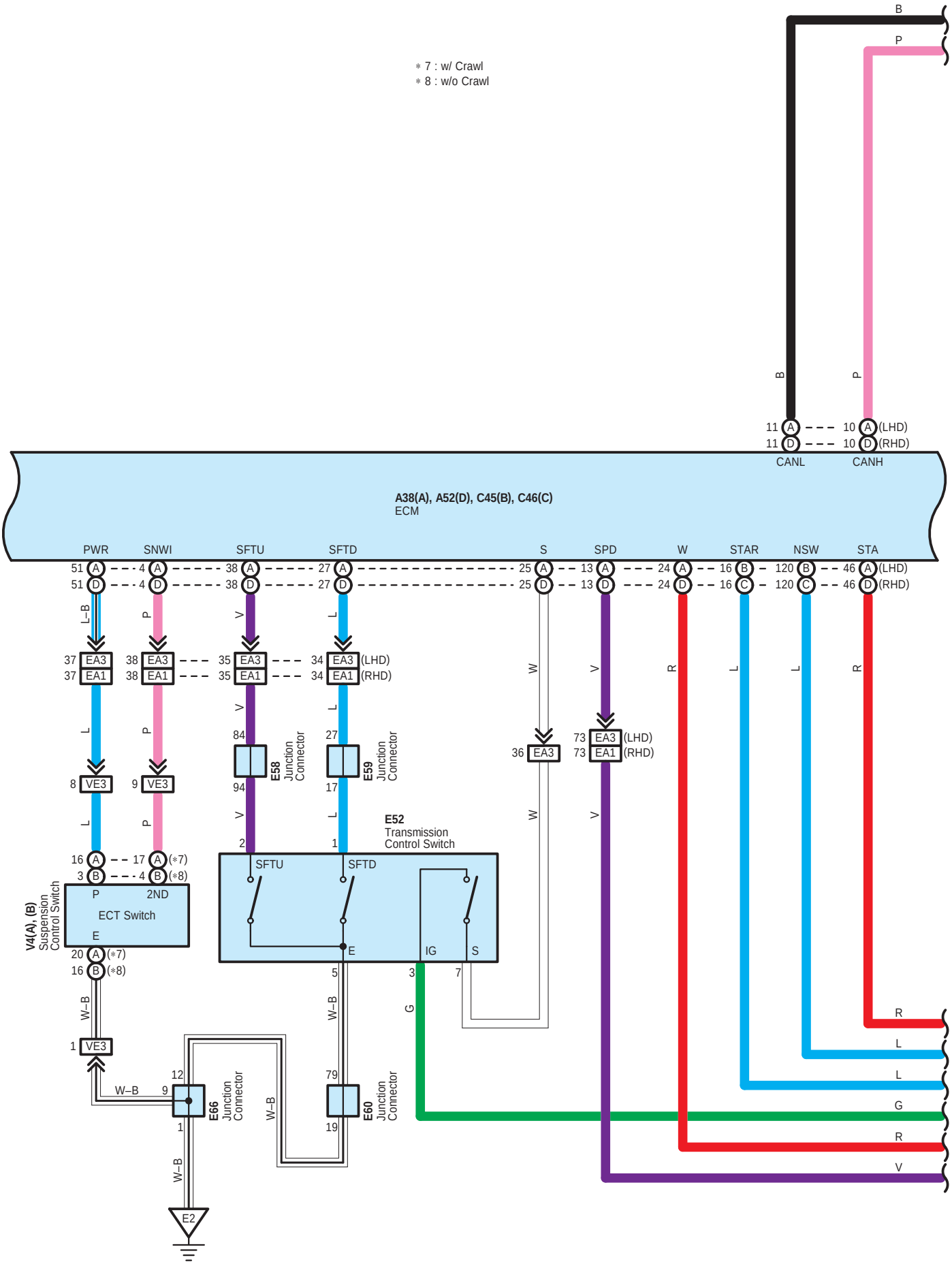
∗ 7 : w/ Crawl
∗ 8 : w/o Crawl
B
P
11 A
11 D
CANL
10 A (LHD)
10 D (RHD)
CANH
A38(A), A52(D), C45(B), C46(C)
ECM
PWR
SNWI
SFTU
SFTD
S
SPD
W
STAR
NSW
STA
51 A
51 D
4 A
4 D
38 A
38 D
27 A
27 D
25 A
25 D
13 A
13 D
24 A
24 D
16 B
16 C
120 B
120 C
46 A (LHD)
46 D (RHD)
L–B
37 EA3
37 EA1
38 EA3
38 EA1
35 EA3
35 EA1
34 EA3 (LHD)
34 EA1 (RHD)
36 EA3
73 EA3 (LHD)
73 EA1 (RHD)
8 VE3
9 VE3
84
94
E58 Junction Connector
27
17
E59 Junction Connector
E52
Transmission Control Switch
2
1
SFTU
SFTD
E
IG
S
3
7
5
16 A
3 B
17 A (∗7)
4 B (∗8)
P
2ND
ECT Switch
E
V4(A), (B) Suspension Control Switch
20 A (∗7)
16 B (∗8)
W–B
1 VE3
12
9
1
E66 Junction Connector
79
19
E60 Junction Connector
E2
G
R
V

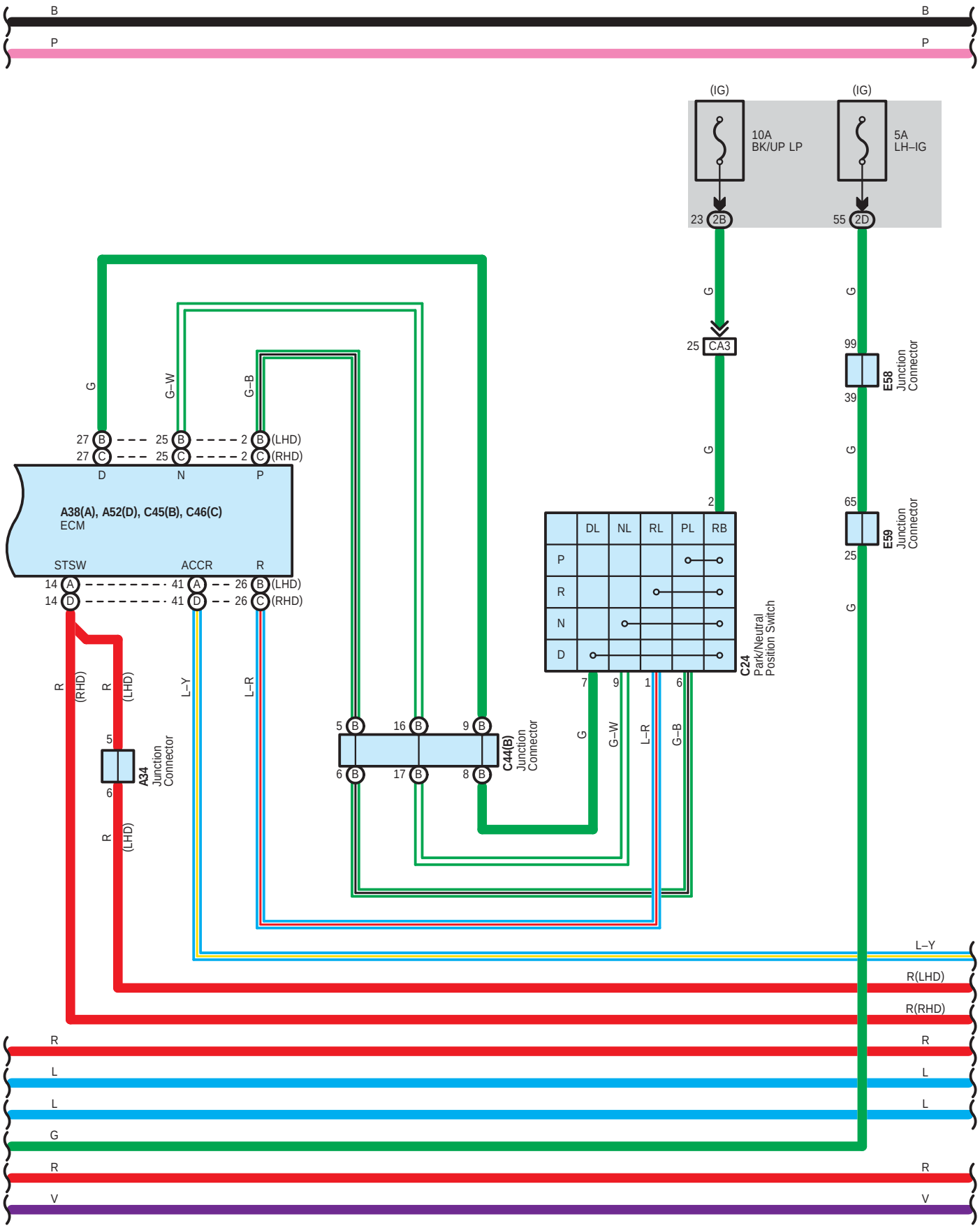
B
P
(IG)
10A
BK/UP LP
5A
LH–IG
23 2B
55 2D
G
25 CA3
99
E58
Junction
Connector
39
65
E59
Junction
Connector
25
27 B
27 C
25 B
25 C
2 B (LHD)
2 C (RHD)
G–W
G–B
D
N
P
A38(A), A52(D), C45(B), C46(C)
ECM
STSW
ACCR
R
14 A
14 D
41 A
41 D
26 B (LHD)
26 C (RHD)
DL
NL
RL
PL
RB
C24
Park/Neutral
Position Switch
7
9
1
6
5 B
16 B
9 B
6 B
17 B
8 B
C44(B)
Junction
Connector
L–R
L–Y
R (RHD)
R (LHD)
5
6
A34
Junction
Connector
R(LHD)
R(RHD)
L
V

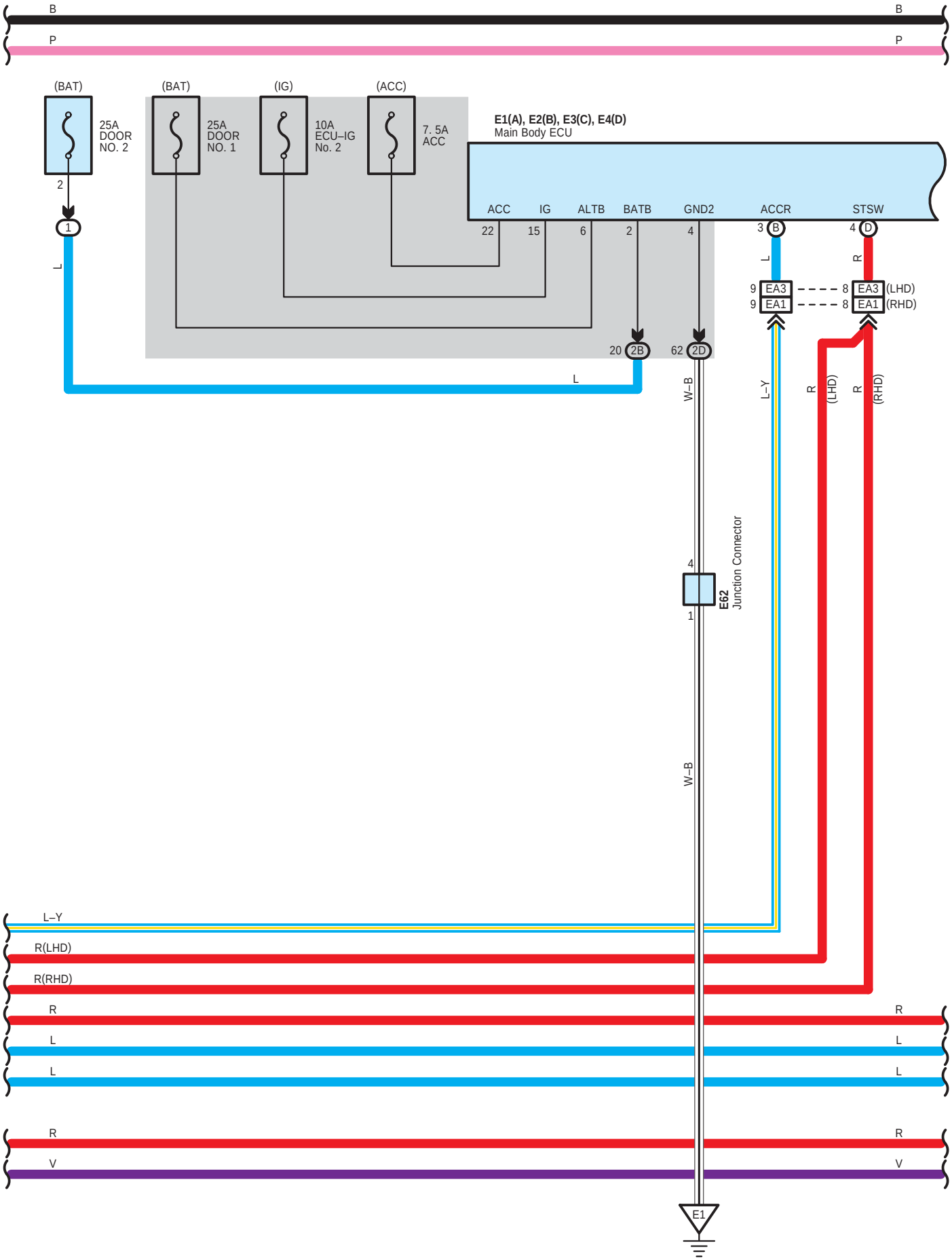
B
P
(BAT)
25A
DOOR
NO. 2
(BAT)
25A
DOOR
NO. 1
(IG)
10A
ECU–IG
No. 2
(ACC)
7. 5A
ACC
E1(A), E2(B), E3(C), E4(D)
Main Body ECU
ACC
IG
ALTB
BATB
GND2
ACCR
STSW
22
15
6
2
4
3
B
4
D
L
R
9
EA3
9
EA1
8
EA3
(LHD)
8
EA1
(RHD)
20
2B
62
2D
W–B
L–Y
R
(LHD)
R
(RHD)
4
1
E62
Junction Connector
W–B
L–Y
R(LHD)
R(RHD)
R
L
L
R
V
E1

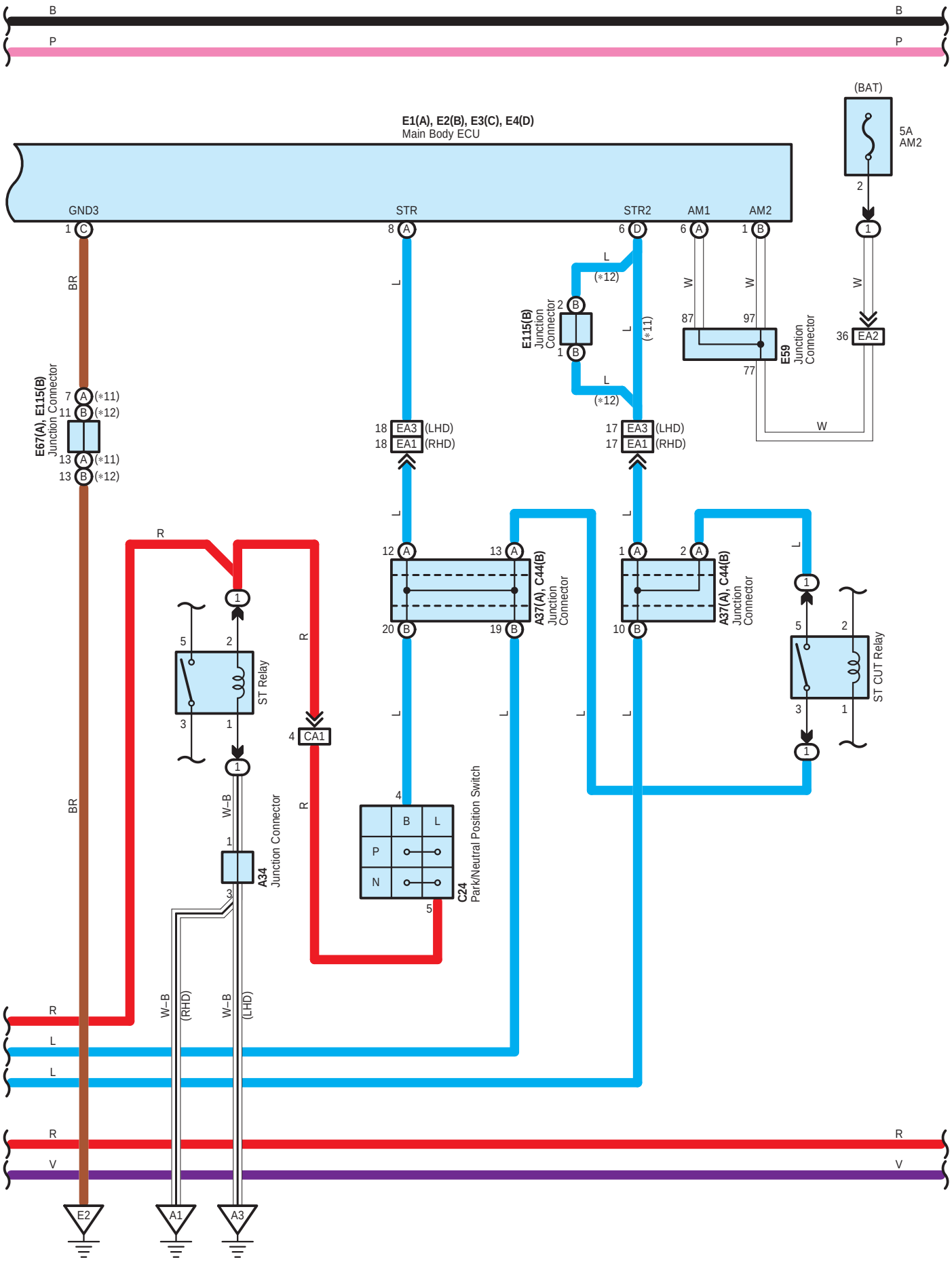
E1(A), E2(B), E3(C), E4(D)
Main Body ECU
GND3
STR
STR2
AM1
AM2
(BAT)
5A
AM2
E67(A), E115(B)
Junction Connector
E115(B)
Junction
Connector
E59
Junction
Connector
EA2
EA3 (LHD)
EA1 (RHD)
A37(A), C44(B)
Junction
Connector
ST Relay
ST CUT Relay
CA1
A34
Junction Connector
C24
Park/Neutral Position Switch
E2
A1
A3

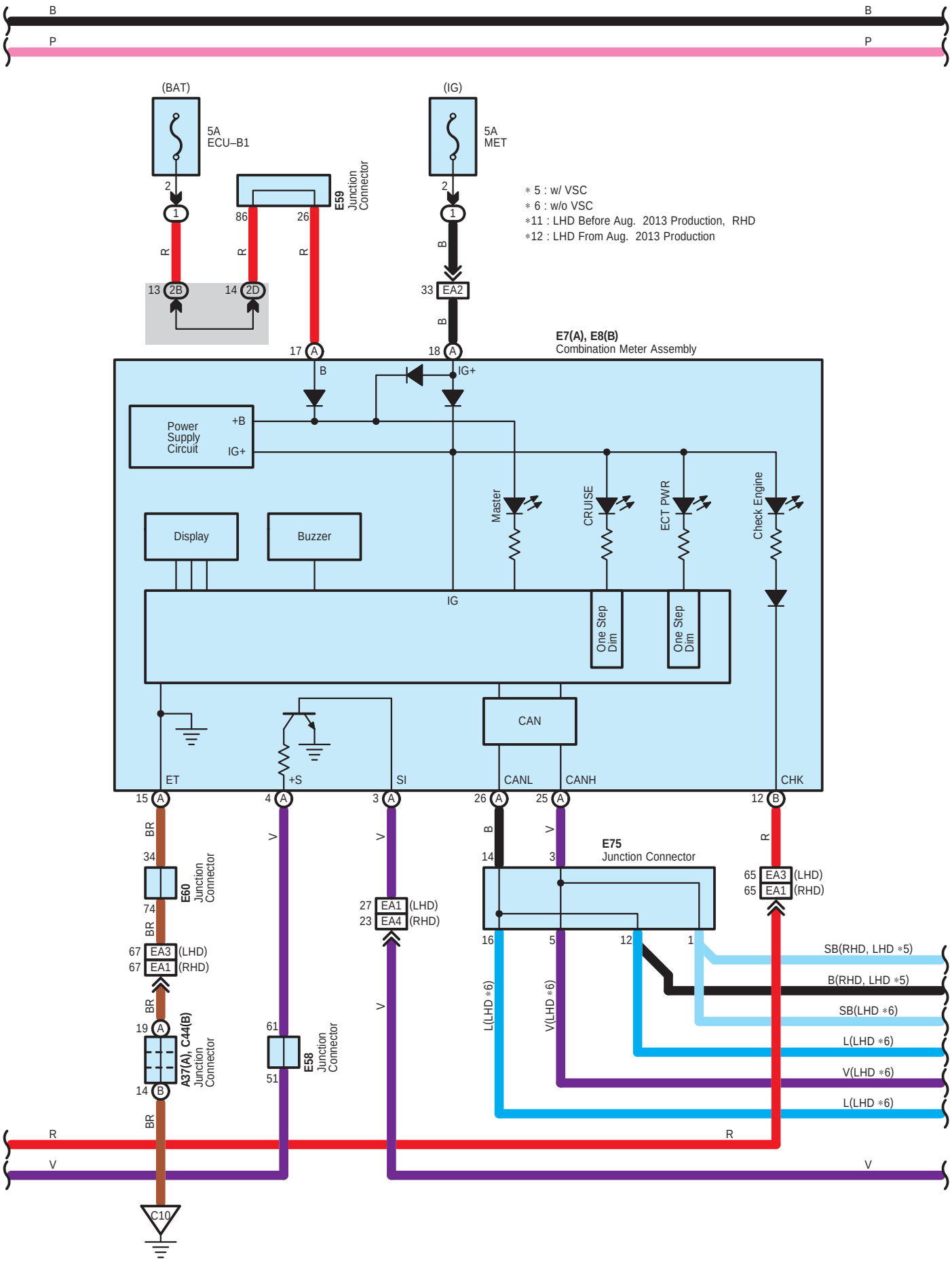
B
P
(BAT)
5A
ECU–B1
(IG)
5A
MET
E59
Junction
Connector
∗ 5 : w/ VSC
∗ 6 : w/o VSC
∗11 : LHD Before Aug. 2013 Production, RHD
∗12 : LHD From Aug. 2013 Production
E7(A), E8(B)
Combination Meter Assembly
Power
Supply
Circuit
+B
IG+
Display
Buzzer
Master
CRUISE
ECT PWR
Check Engine
IG
One Step
Dim
CAN
ET
+S
SI
CANL
CANH
CHK
E60
Junction
Connector
A37(A), C44(B)
Junction
Connector
E58
Junction
Connector
E75
Junction Connector
(LHD)
(RHD)
SB(RHD, LHD ∗5)
B(RHD, LHD ∗5)
SB(LHD ∗6)
L(LHD ∗6)
V(LHD ∗6)
C10

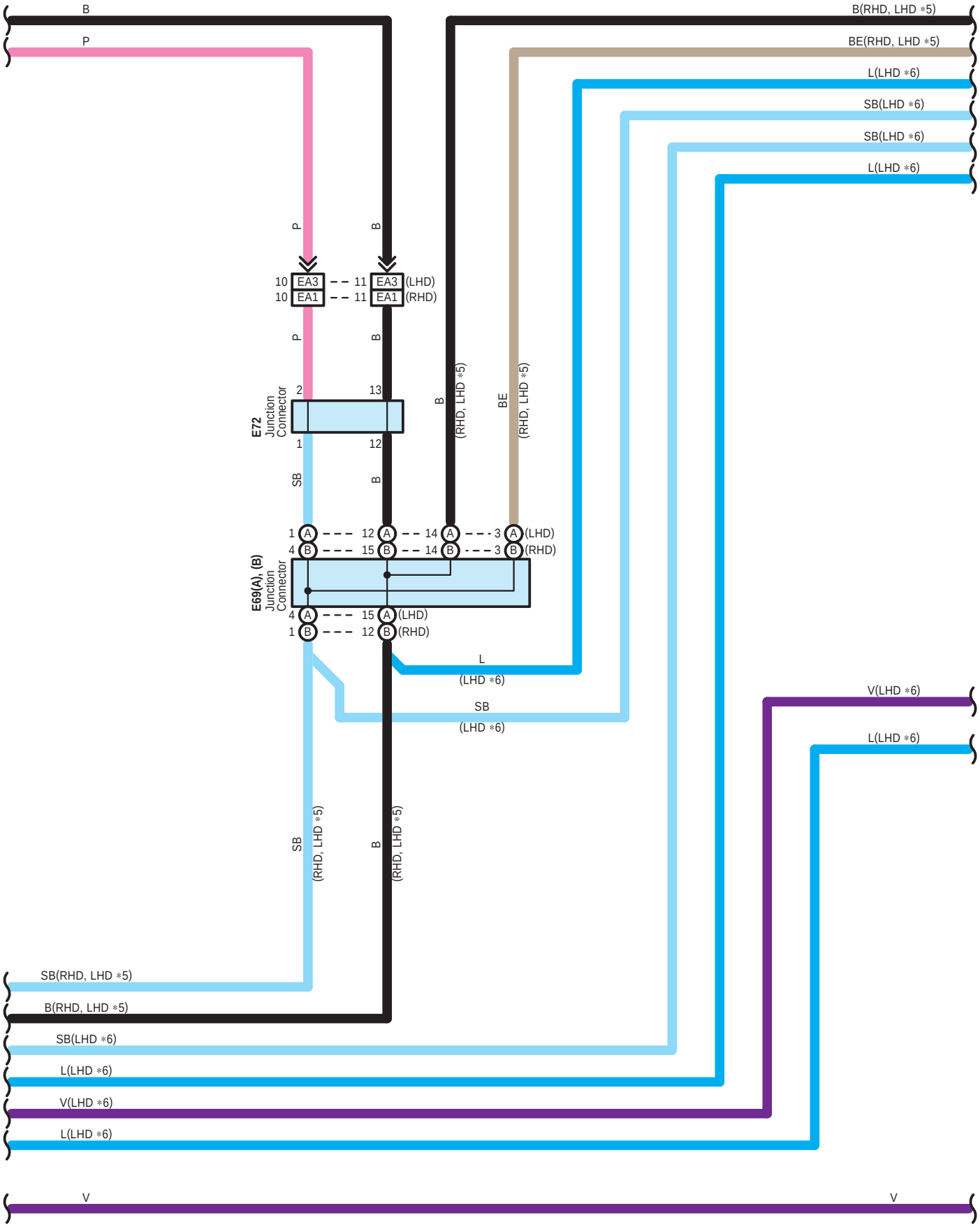
B
P
B(RHD, LHD ∗5)
BE(RHD, LHD ∗5)
L(LHD ∗6)
SB(LHD ∗6)
SB(LHD ∗6)
L(LHD ∗6)
P
B
10 EA3 11 EA3 (LHD)
10 EA1 11 EA1 (RHD)
P
B
E72 Junction Connector
2
13
1
12
B
(RHD, LHD ∗5)
BE
(RHD, LHD ∗5)
SB
B
1 A 12 A 14 A 3 A (LHD)
4 B 15 B 14 B 3 B (RHD)
E69(A), (B) Junction Connector
4 A 15 A (LHD)
1 B 12 B (RHD)
L
(LHD ∗6)
SB
(LHD ∗6)
V(LHD ∗6)
L(LHD ∗6)
SB
(RHD, LHD ∗5)
B
(RHD, LHD ∗5)
SB(RHD, LHD ∗5)
B(RHD, LHD ∗5)
SB(LHD ∗6)
L(LHD ∗6)
V(LHD ∗6)
L(LHD ∗6)
V
V

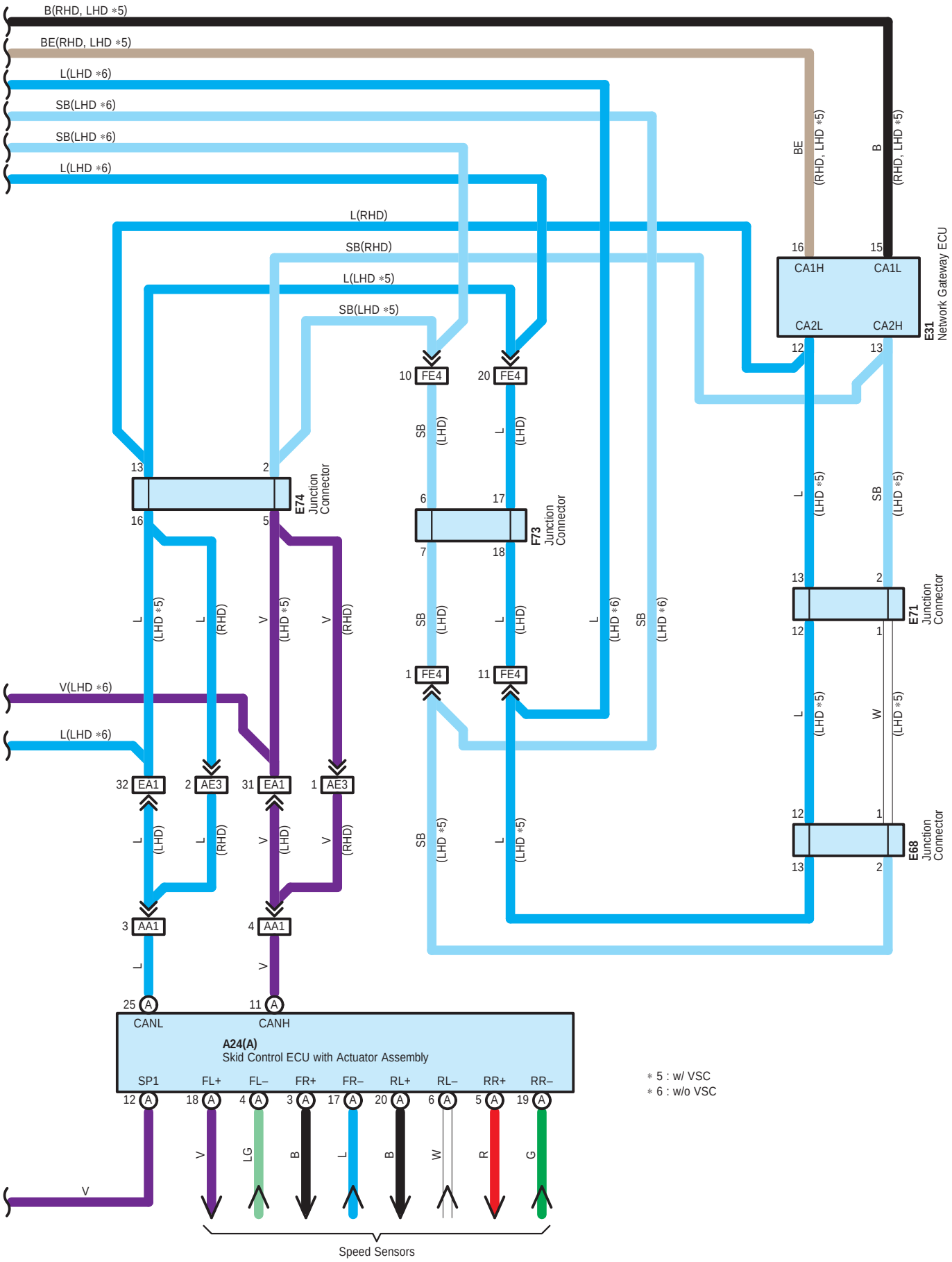
B(RHD, LHD *5)
BE(RHD, LHD *5)
L(LHD *6)
SB(LHD *6)
SB(LHD *6)
L(LHD *6)
L(RHD)
SB(RHD)
L(LHD *5)
SB(LHD *5)
BE (RHD, LHD *5)
B (RHD, LHD *5)
16 CA1H
15 CA1L
CA2L 12
CA2H 13
E31 Network Gateway ECU
10 FE4
20 FE4
SB (LHD)
L (LHD)
13
2
E74 Junction Connector
16
5
6
17
F73 Junction Connector
7
18
L (LHD *5)
SB (LHD *5)
13
2
E71 Junction Connector
12
1
L (LHD *5)
L (RHD)
V (LHD *5)
V (RHD)
SB (LHD)
L (LHD)
L (LHD *6)
SB (LHD *6)
1 FE4
11 FE4
V(LHD *6)
L(LHD *6)
L (LHD *5)
W (LHD *5)
32 EA1
2 AE3
31 EA1
1 AE3
L (LHD)
L (RHD)
V (LHD)
V (RHD)
SB (LHD *5)
L (LHD *5)
12
1
E68 Junction Connector
13
2
3 AA1
4 AA1
L
V
25 A
11 A
CANL
CANH
A24(A)
Skid Control ECU with Actuator Assembly
SP1
FL+
FL–
FR+
FR–
RL+
RL–
RR+
RR–
12 A
18 A
4 A
3 A
17 A
20 A
6 A
5 A
19 A
V
LG
B
L
B
W
R
G
V
Speed Sensors
* 5 : w/ VSC
* 6 : w/o VSC

A 24
Black

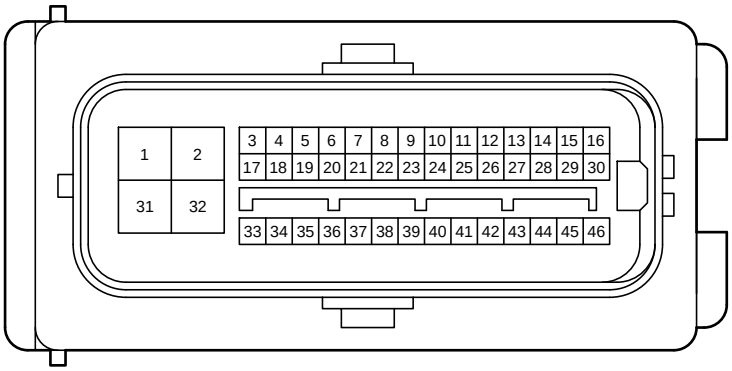

A 27
Black

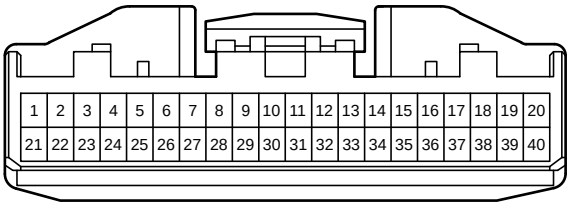

A 30
Gray

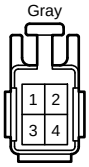

A 31
Black

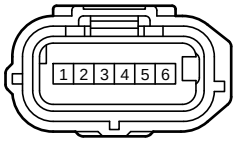

A 34
White

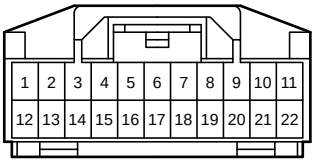

A 37
Blue

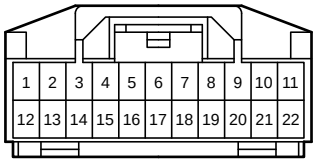

A 38
Black

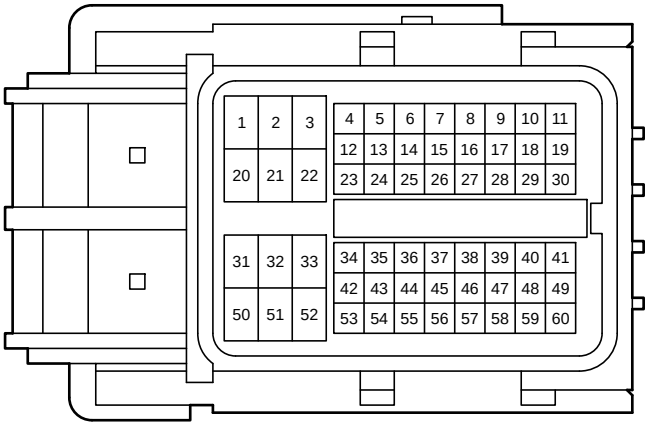

A 52
Black

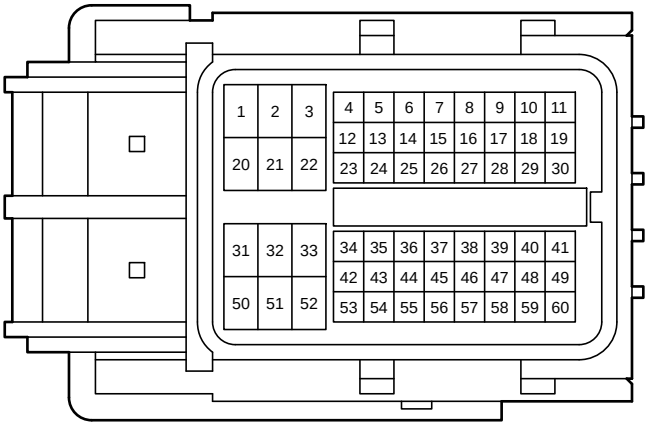

C 3
Black

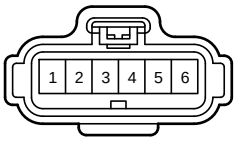

C 18
Dark Gray

C 20
Dark Gray

C 22
Dark Gray

C 23
Dark Gray

C 24
Gray

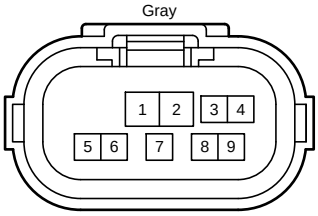

C 34
Gray

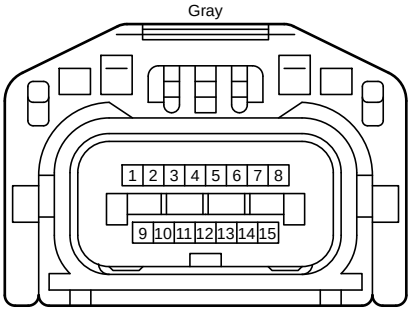

C 35
Black

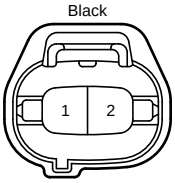

C 36
Black

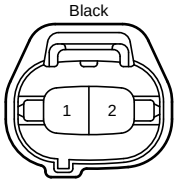

C 42
White

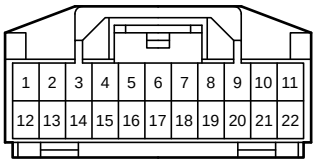

C 43
White

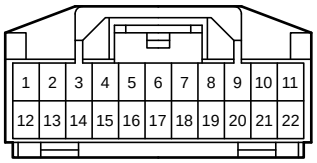

C 44
Blue

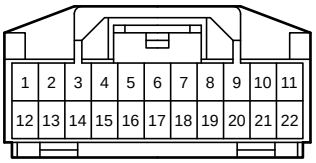

C 45
Black

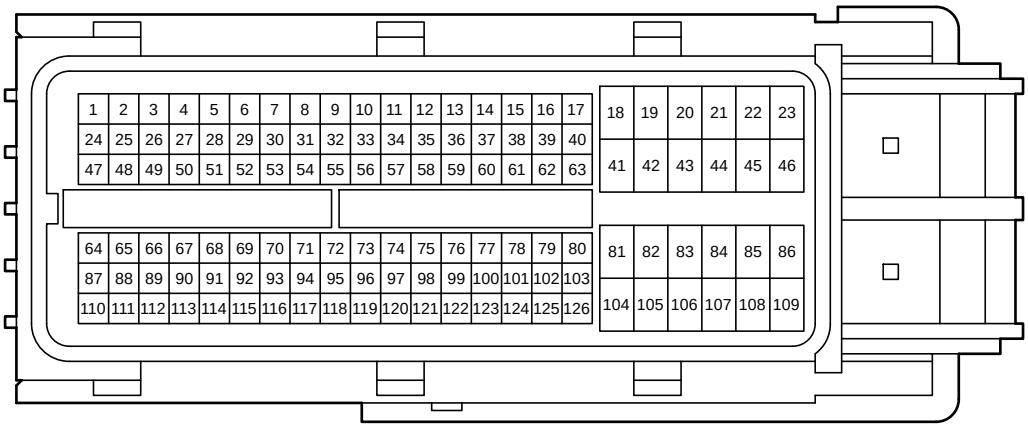

C 46
Black

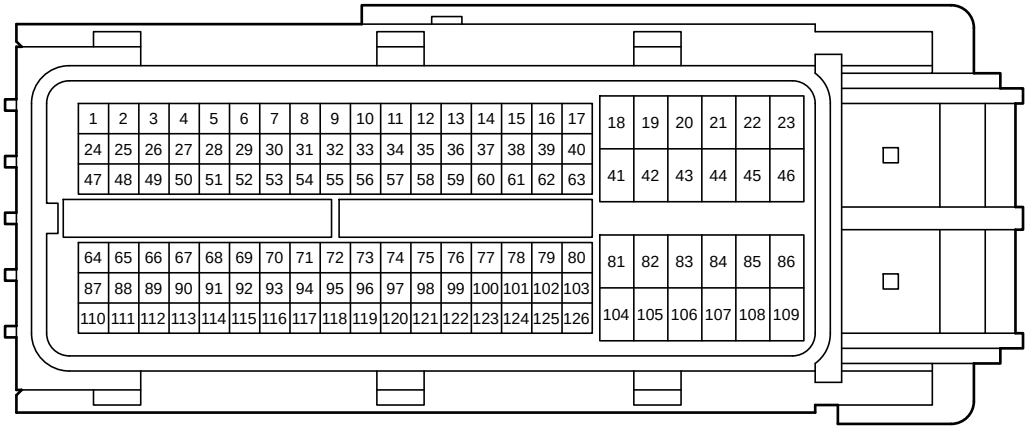

C 50
Black

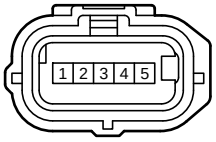

C 55
Black

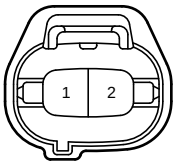

C 56
Dark Gray

C 59
Gray

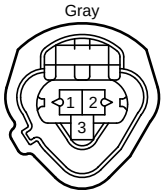

C 60
Black

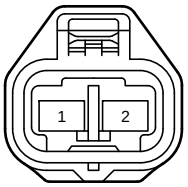

C 61
Black

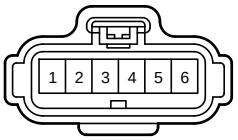

C 96
Gray

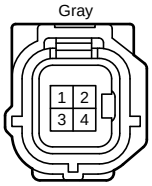

C 99
Black

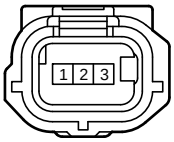

C100
Black

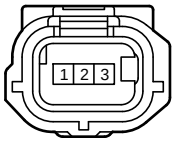

C101
Black

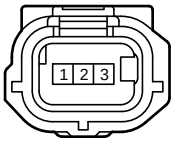

C102
Black

C103
Black

C114
Black

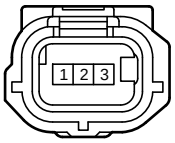

C121
Black

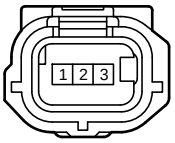

C122
Black

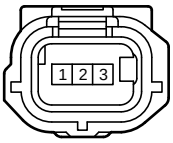

C125
Black

C126
Black

C129
Black

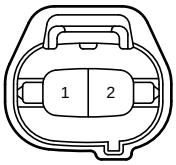

C136
Gray

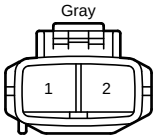

C137
Black

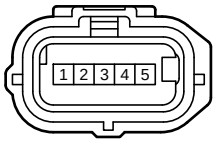

C138
Black

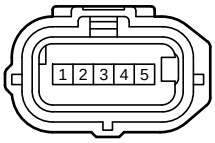

C139
Black

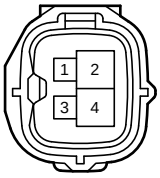

C168
Black

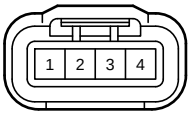

D 4
Black

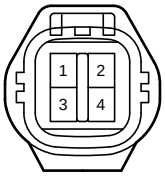

E 1
White

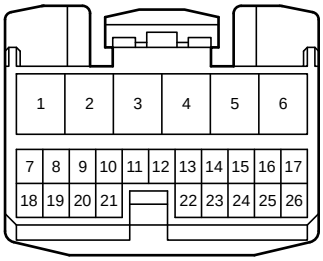

E 2
White

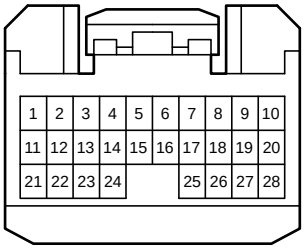

E 3
White

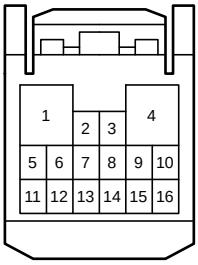

E 4
White

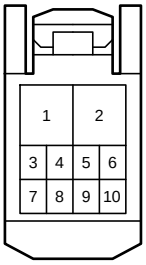

E 7
White

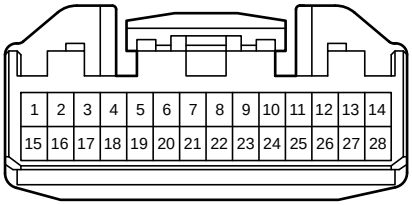

E 8
Black

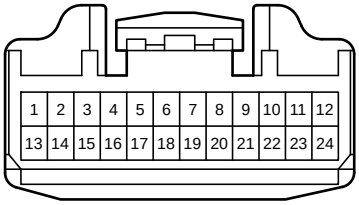

E 12
Black

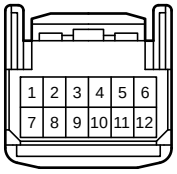

E 22
White

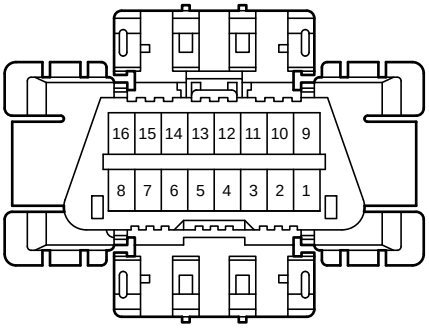

E 28

White

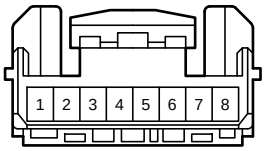

E 31

White

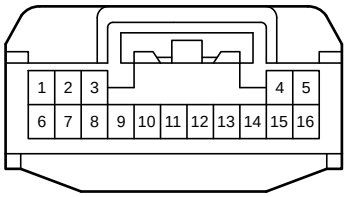

E 36

White

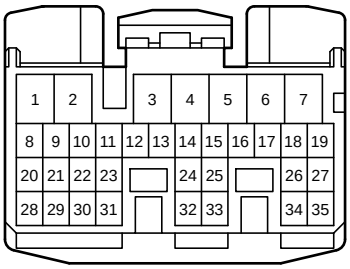

E 52

White

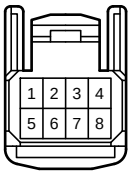

E 58

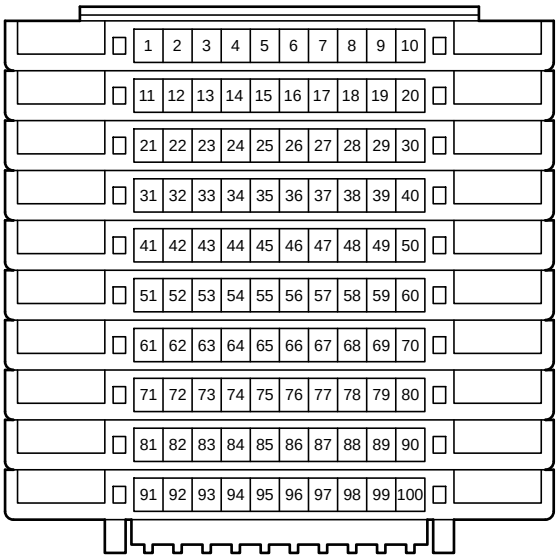

E 59

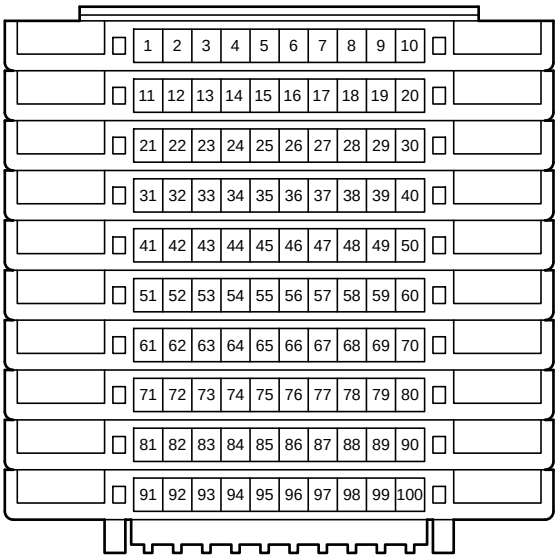

E 60

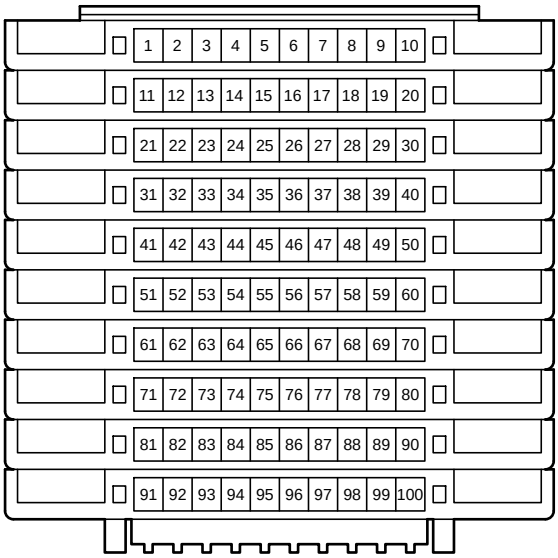

E 62

White

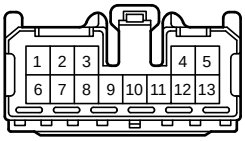

E 66

White

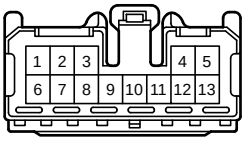

E 67
White

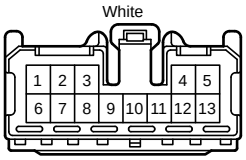

E 68
Gray

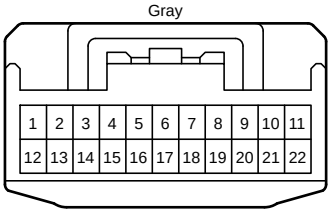

E 69
Gray

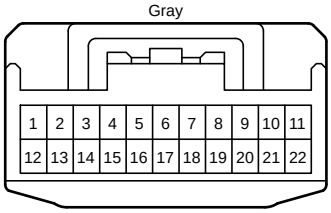

E 71
Gray

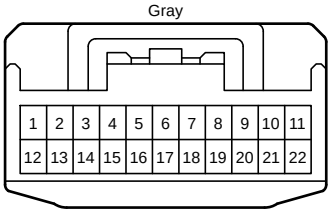

E 72
Gray

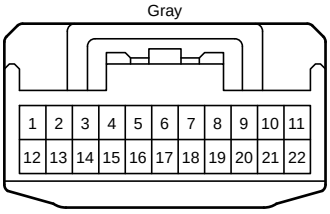

E 74
Gray

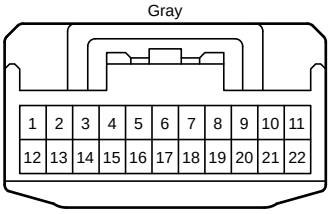

E 75
Gray

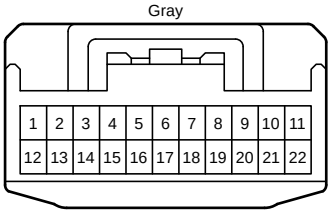

E 81
White

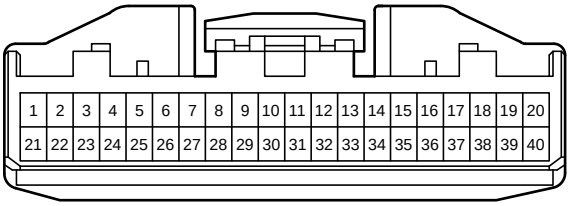

E115
White

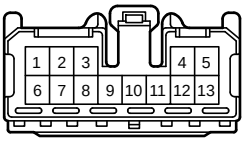

F 73
Blue

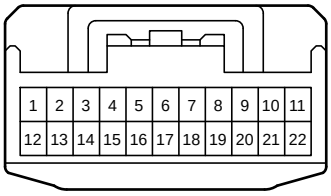

N 1
White

N 14
Black

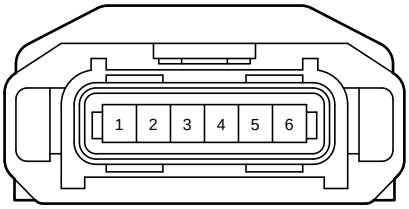

U 3
Gray

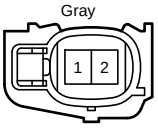

U 4
Black

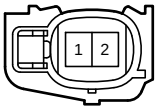

U 5
Gray

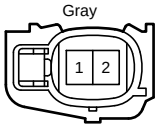

U 6
Black

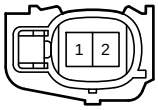

V 4
White

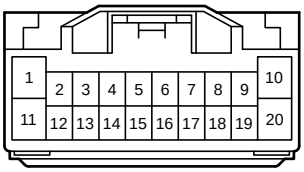

a 1
Black

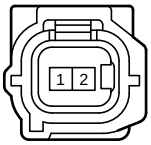

a 2
Black

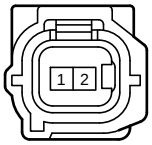

a 3
Black

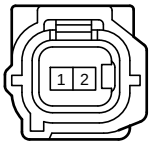

a 4
Black

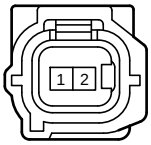

a 5
Black

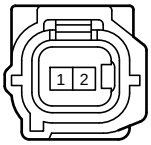

a 6
Black

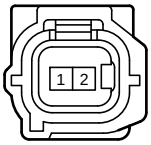

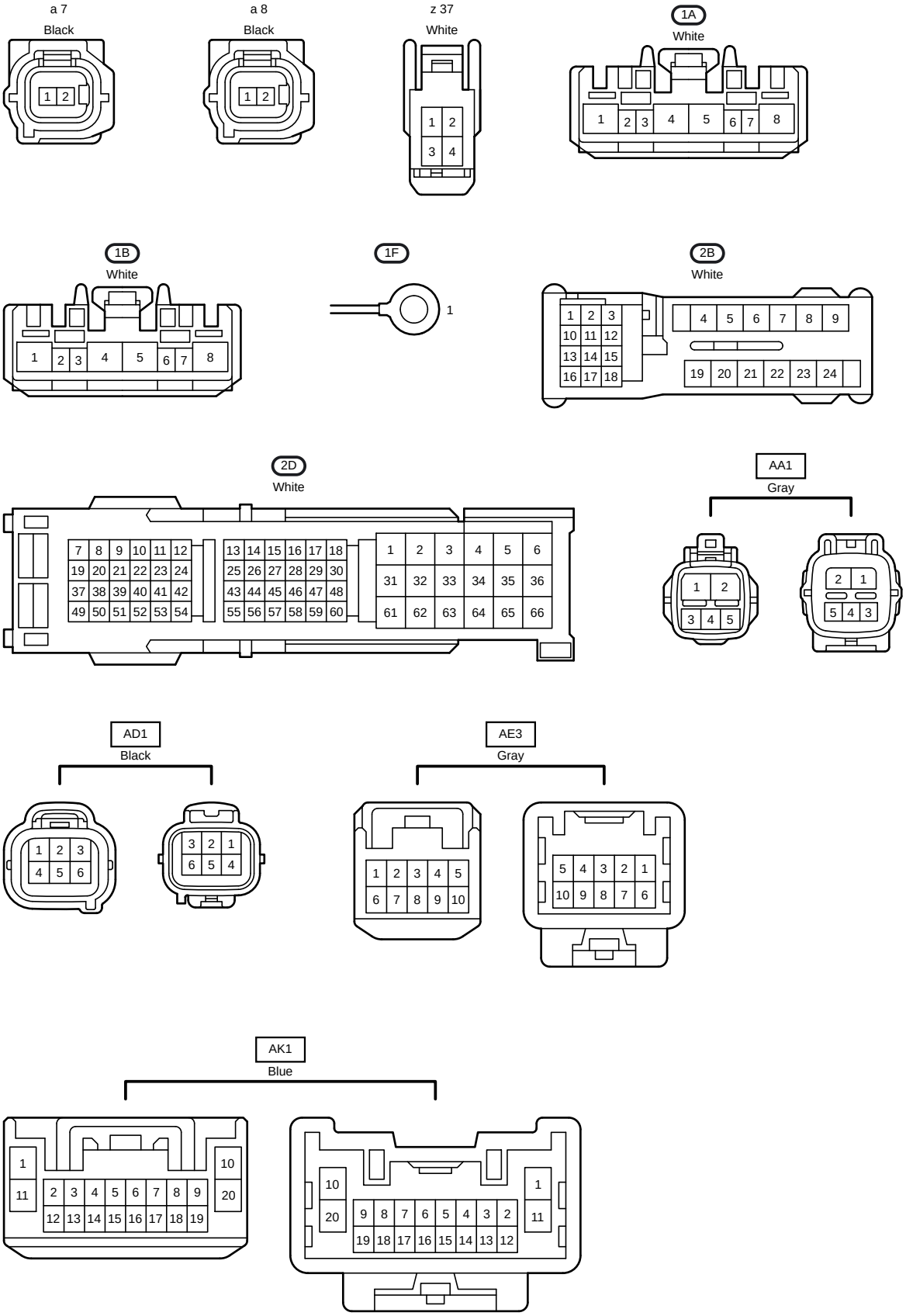
a 7
Black
a 8
Black
z 37
White
1A
White
1B
White
1F
2B
White
2D
White
AA1
Gray
AD1
Black
AE3
Gray
AK1
Blue

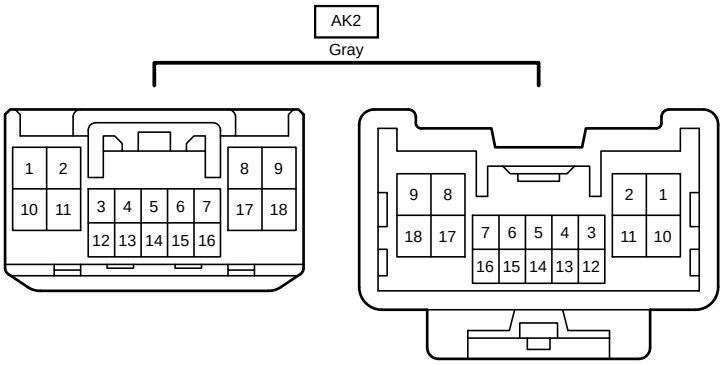
AK2
Gray

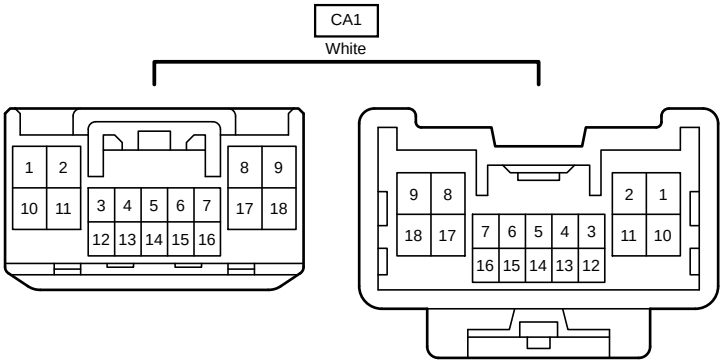
CA1
White

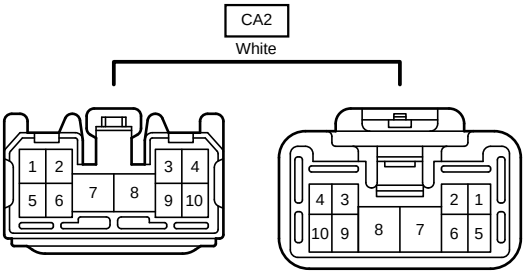
CA2
White

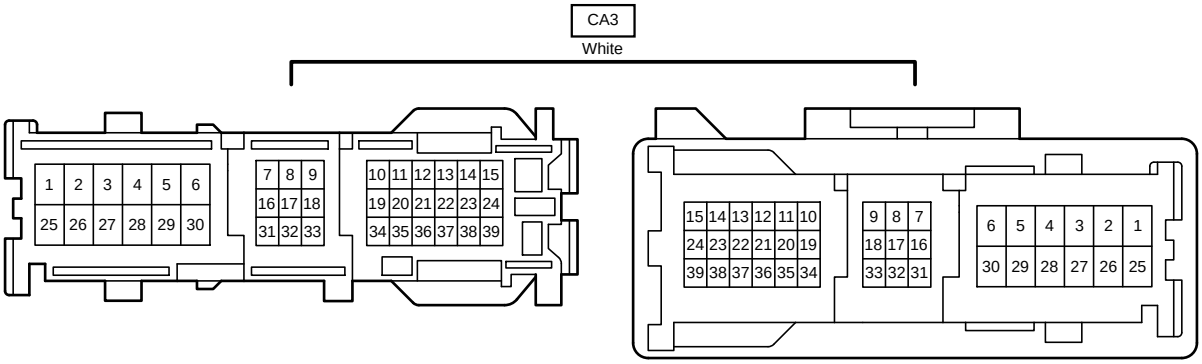
CA3
White

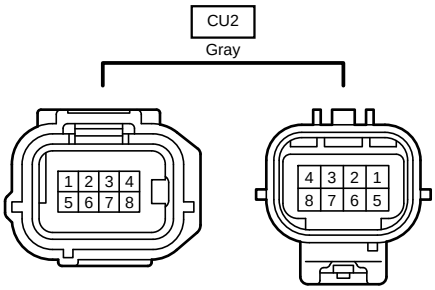
CU2
Gray

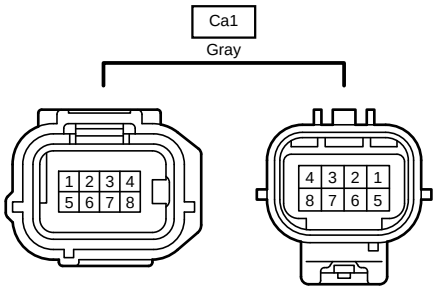
Ca1
Gray

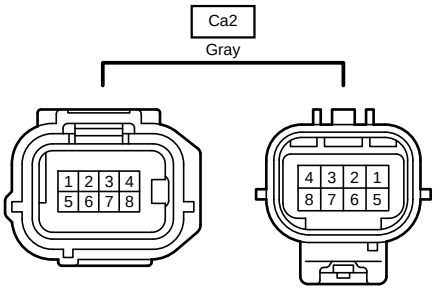
Ca2
Gray
1 2 3 4
5 6 7 8
4 3 2 1
8 7 6 5

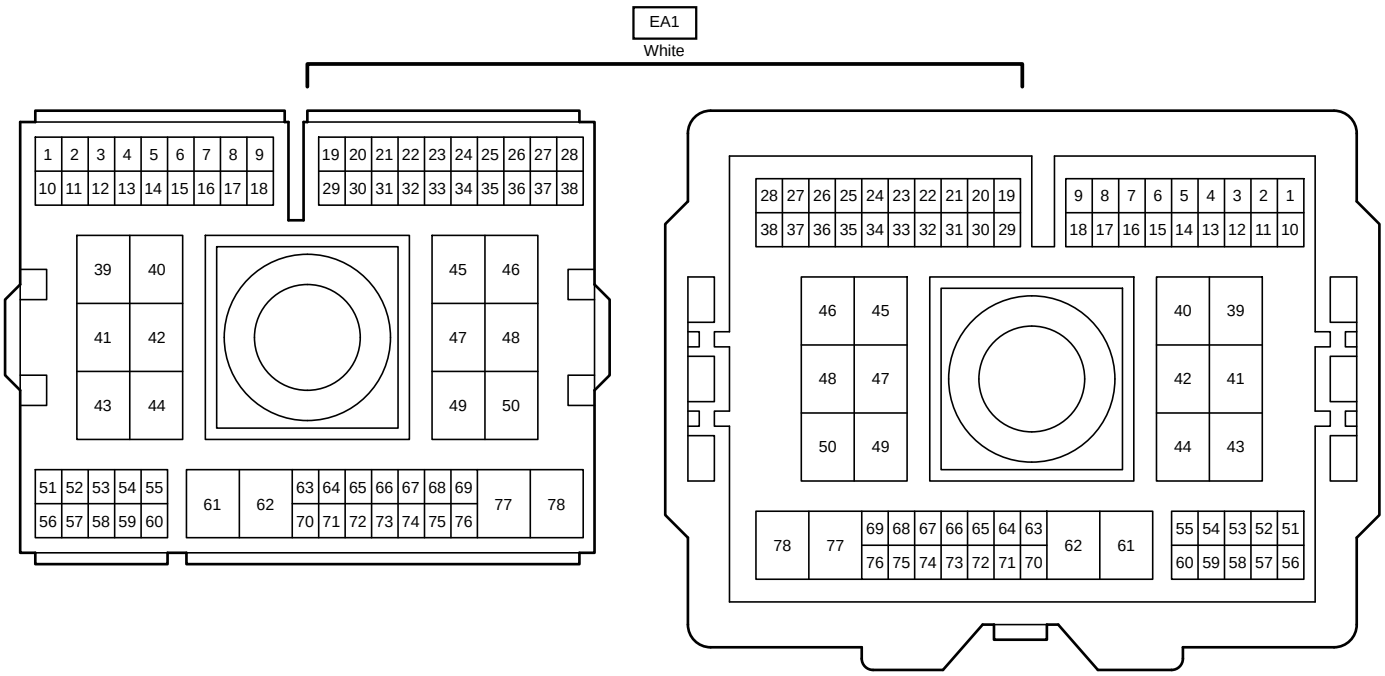
EA1
White
1 2 3 4 5 6 7 8 9
10 11 12 13 14 15 16 17 18
19 20 21 22 23 24 25 26 27 28
29 30 31 32 33 34 35 36 37 38
39 40
41 42
43 44
45 46
47 48
49 50
51 52 53 54 55
56 57 58 59 60
61 62
63 64 65 66 67 68 69
70 71 72 73 74 75 76
77 78
28 27 26 25 24 23 22 21 20 19
38 37 36 35 34 33 32 31 30 29
9 8 7 6 5 4 3 2 1
18 17 16 15 14 13 12 11 10
46 45
48 47
50 49
40 39
42 41
44 43
78 77
69 68 67 66 65 64 63
76 75 74 73 72 71 70
62 61
55 54 53 52 51
60 59 58 57 56

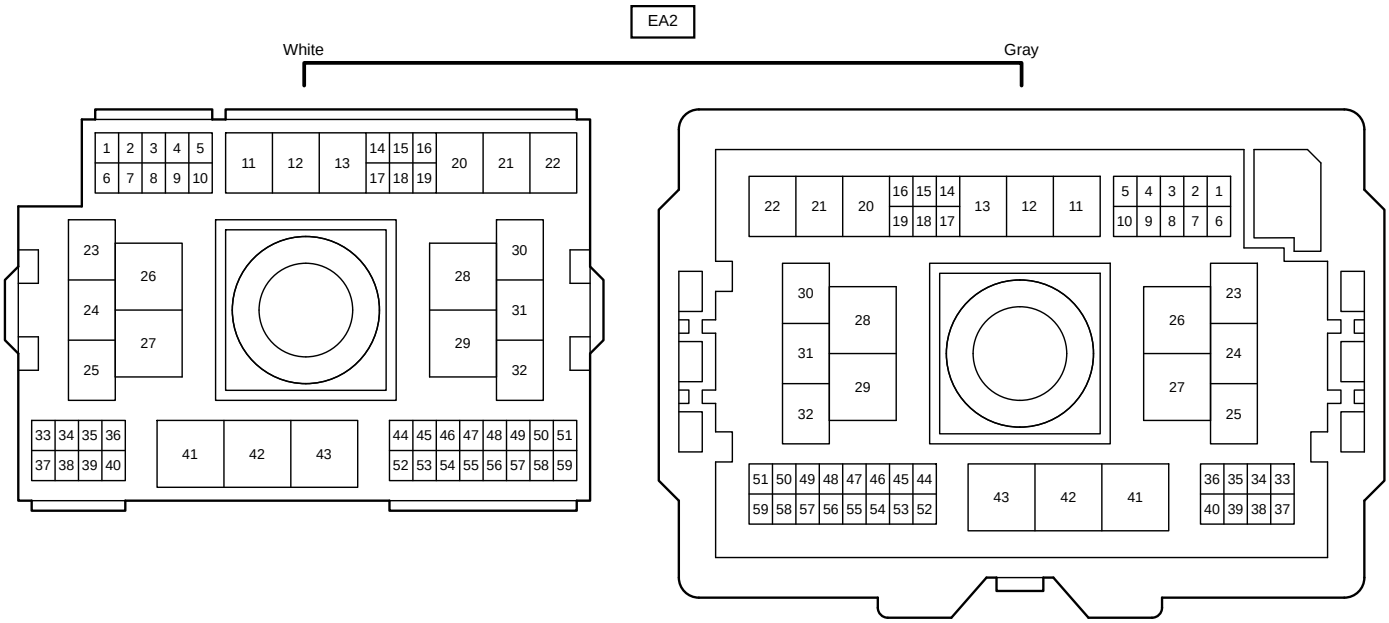
EA2
White
Gray
1 2 3 4 5
6 7 8 9 10
11 12 13
14 15 16
17 18 19
20 21 22
23 26
24 27
25
28 30
29 31
32
33 34 35 36
37 38 39 40
41 42 43
44 45 46 47 48 49 50 51
52 53 54 55 56 57 58 59
22 21 20
16 15 14
19 18 17
13 12 11
5 4 3 2 1
10 9 8 7 6
30 28
31 29
32
26 23
27 24
25
51 50 49 48 47 46 45 44
59 58 57 56 55 54 53 52
43 42 41
36 35 34 33
40 39 38 37

EA3
White

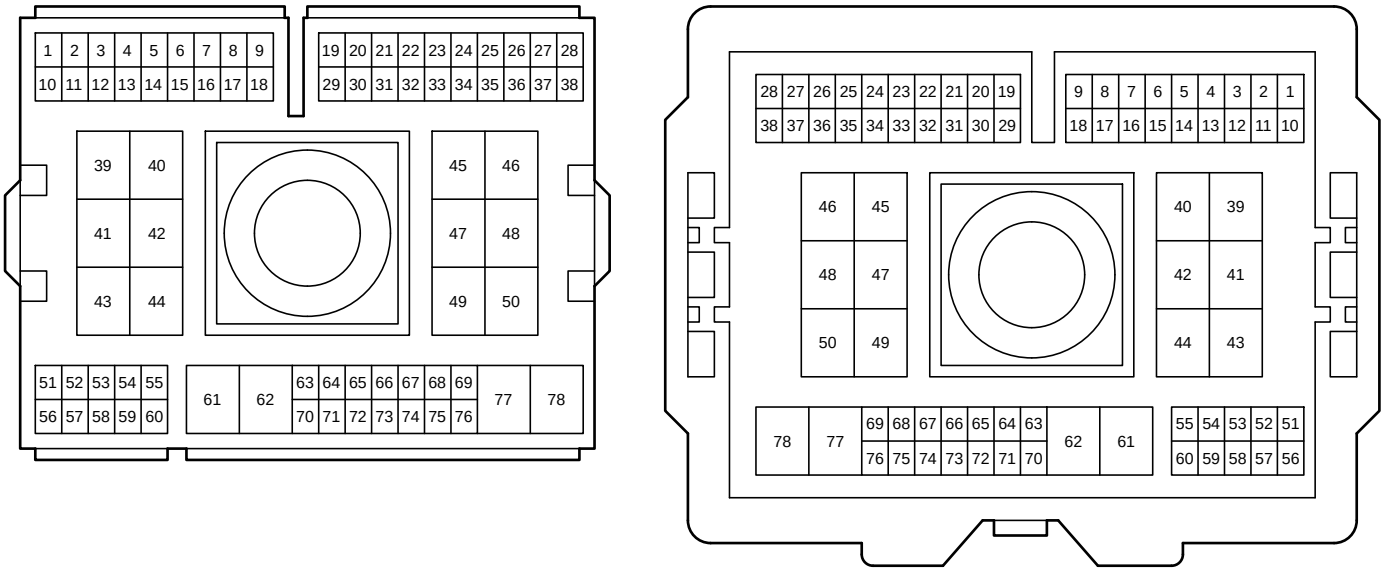

EA4
White

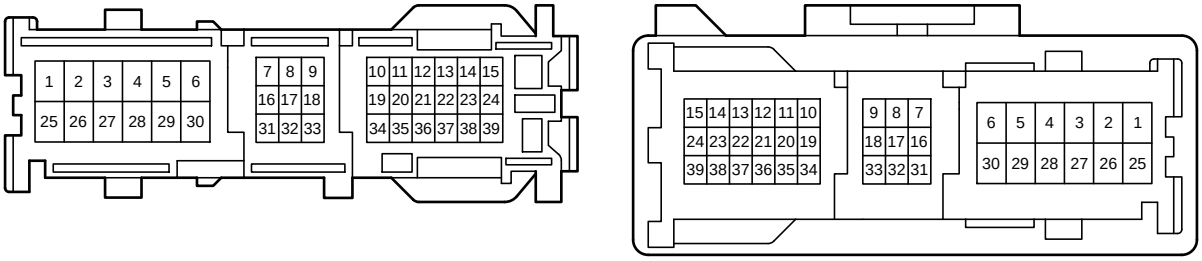

FE4
White

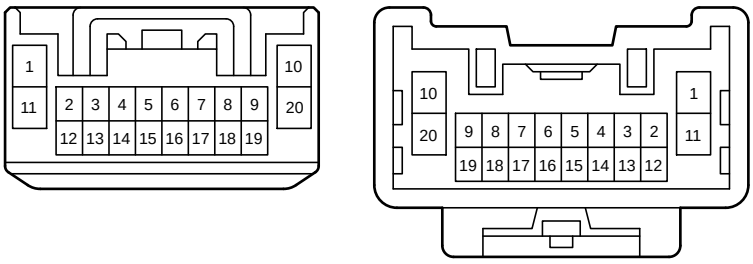

KN1
White

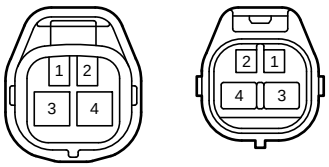

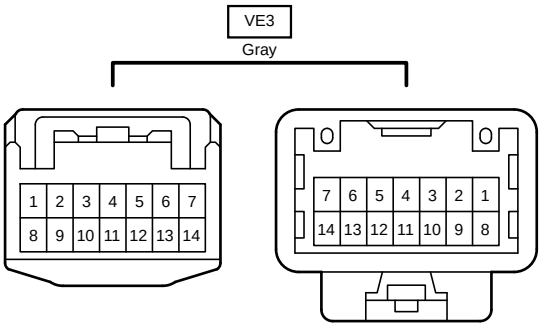
VE3
Gray
1 2 3 4 5 6 7
8 9 10 11 12 13 14
7 6 5 4 3 2 1
14 13 12 11 10 9 8