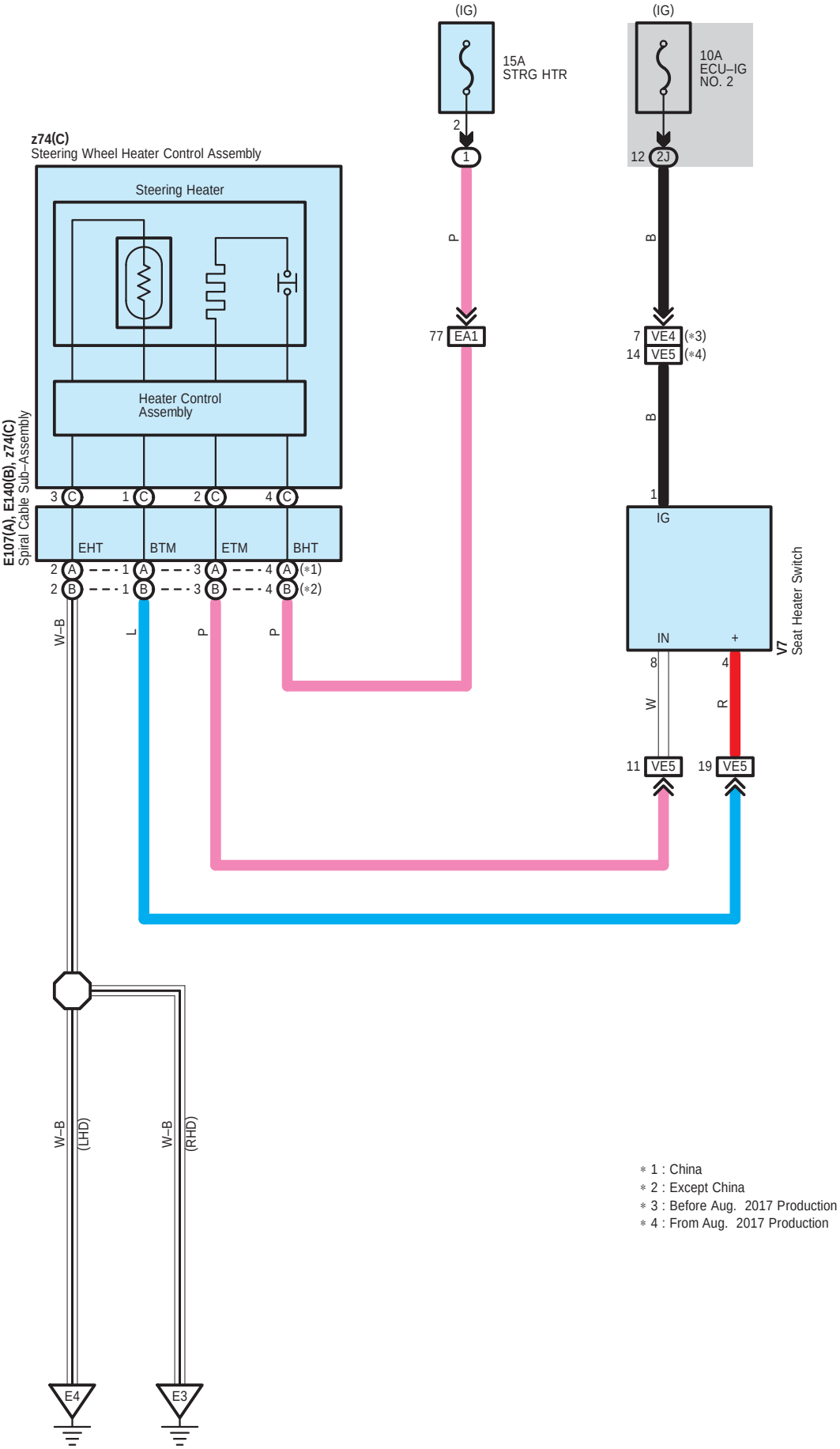
(IG)
15A
STRG HTR
(IG)
10A
ECU–IG
NO. 2
z74(C)
Steering Wheel Heater Control Assembly
Steering Heater
Heater Control
Assembly
E107(A), E140(B), z74(C)
Spiral Cable Sub–Assembly
EHT
BTM
ETM
BHT
(∗1)
(∗2)
IG
IN
+
V7
Seat Heater Switch
VE4
VE5
EA1
(∗3)
(∗4)
W–B
(LHD)
(RHD)
E4
E3
∗ 1 : China
∗ 2 : Except China
∗ 3 : Before Aug. 2017 Production
∗ 4 : From Aug. 2017 Production

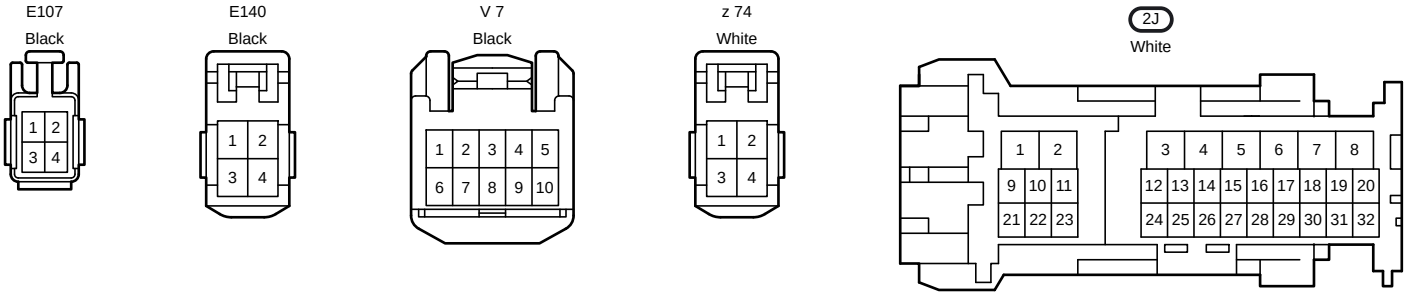
E107
Black
E140
Black
V 7
Black
z 74
White
2J
White

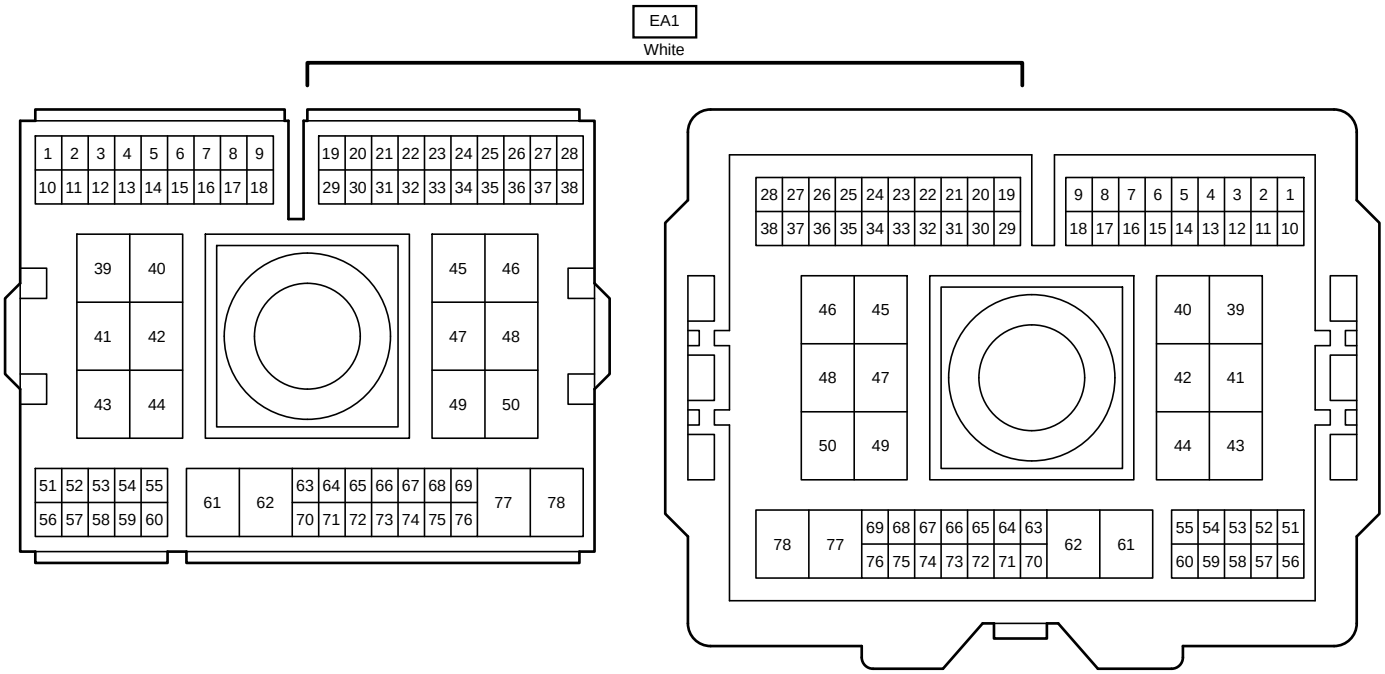
EA1
White

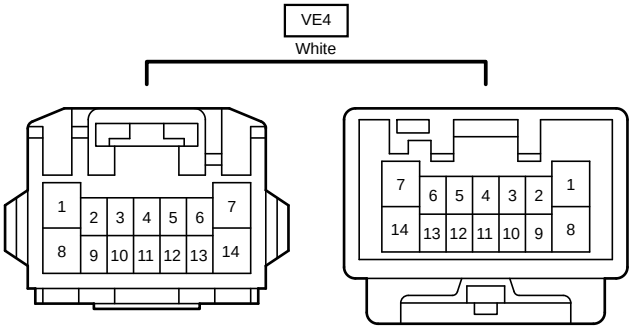
VE4
White

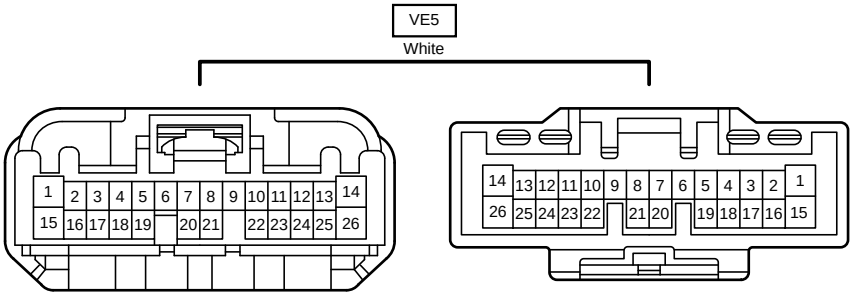
VE5
White