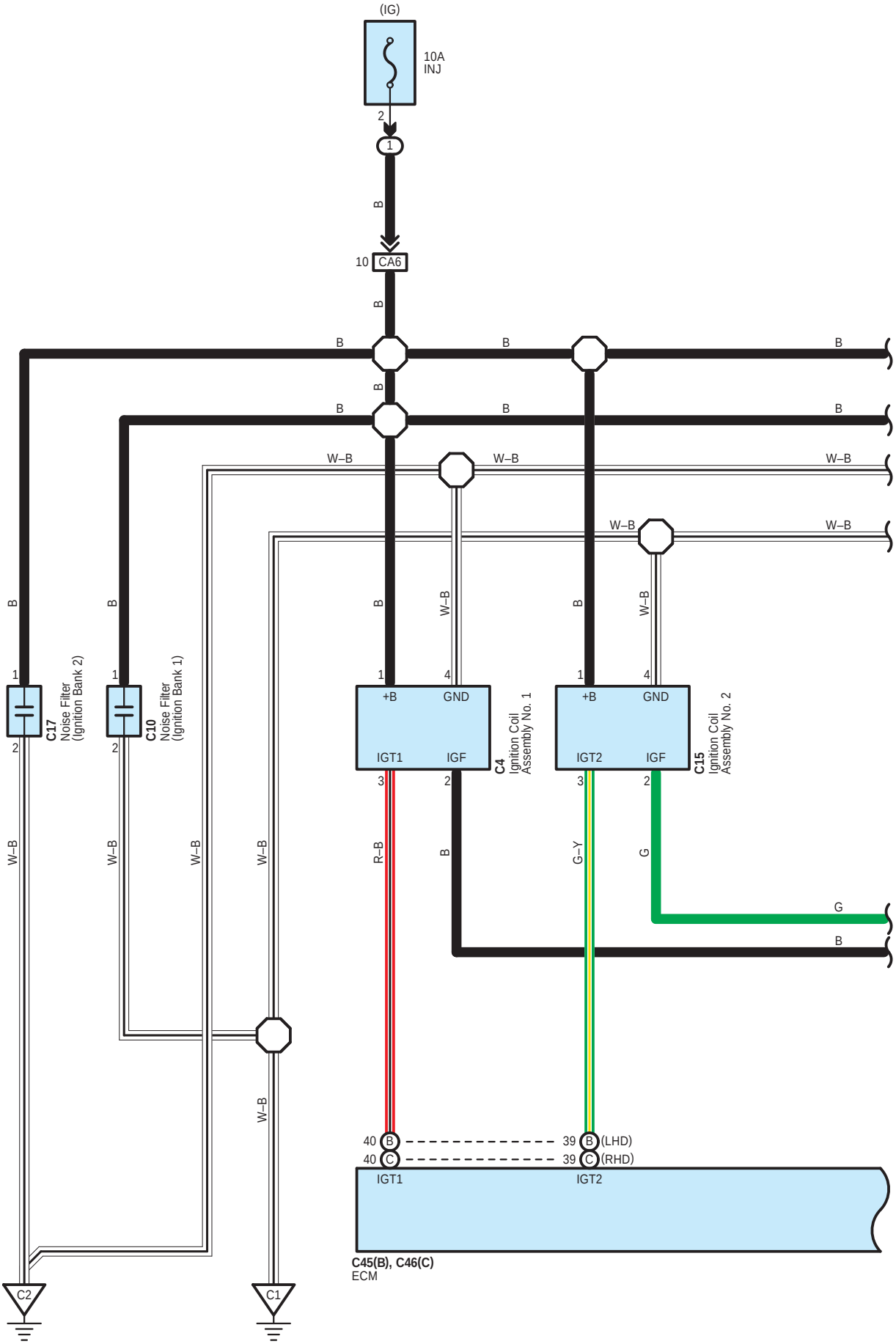
(IG)
10A
INJ
2
1
B
10
CA6
B
B
B
B
B
B
B
B
W–B
W–B
W–B
W–B
W–B
B
B
B
W–B
B
W–B
1
1
1
4
1
4
C17
Noise Filter
(Ignition Bank 2)
C10
Noise Filter
(Ignition Bank 1)
+B
GND
IGT1
IGF
C4
Ignition Coil
Assembly No. 1
+B
GND
IGT2
IGF
C15
Ignition Coil
Assembly No. 2
2
2
3
2
3
2
W–B
W–B
W–B
W–B
R–B
B
G–Y
G
G
B
W–B
40
B
40
C
39
B
(LHD)
39
C
(RHD)
IGT1
IGT2
C45(B), C46(C)
ECM
C2
C1

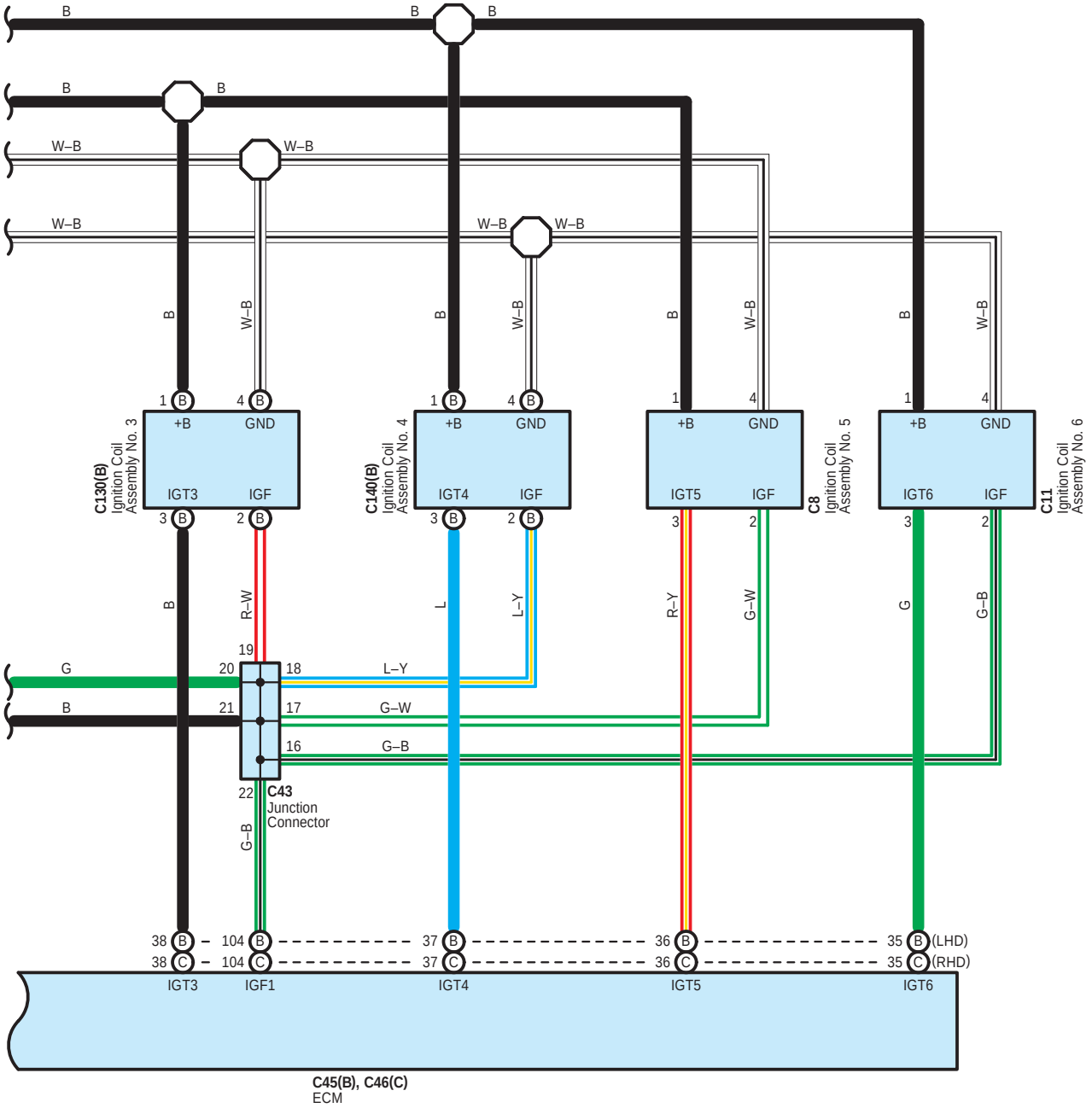
B
W–B
C130(B)
Ignition Coil
Assembly No. 3
C140(B)
Ignition Coil
Assembly No. 4
C8
Ignition Coil
Assembly No. 5
C11
Ignition Coil
Assembly No. 6
+B
GND
IGT3
IGF
IGT4
IGT5
IGT6
R–W
L
L–Y
R–Y
G–W
G
G–B
C43
Junction
Connector
IGF1
(LHD)
(RHD)
C45(B), C46(C)
ECM

C 4
Black

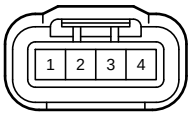

C 8
Black

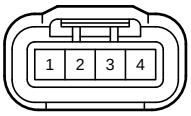

C 10
Gray

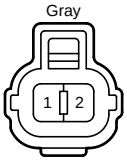

C 11
Black

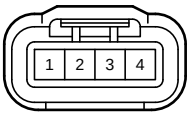

C 15
Black

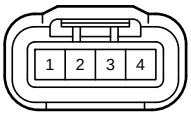

C 17
Gray

C 43
White

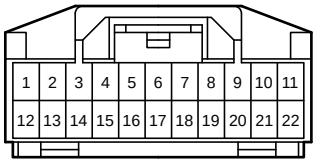

C 45
Black

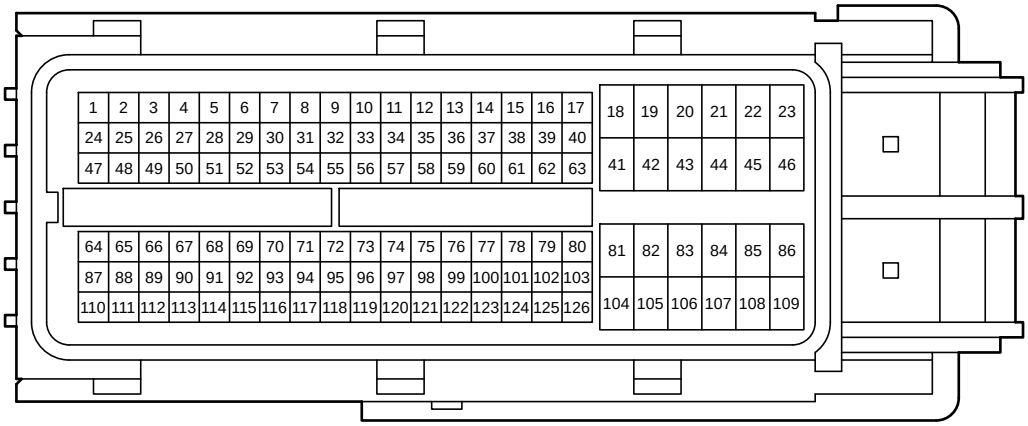

C 46
Black

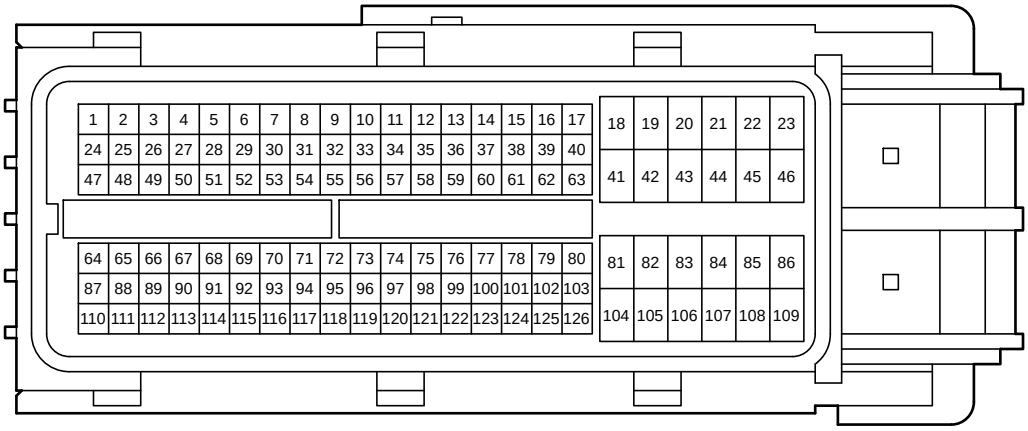

C130
Gray

C140
Gray

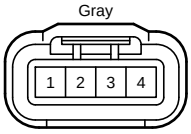

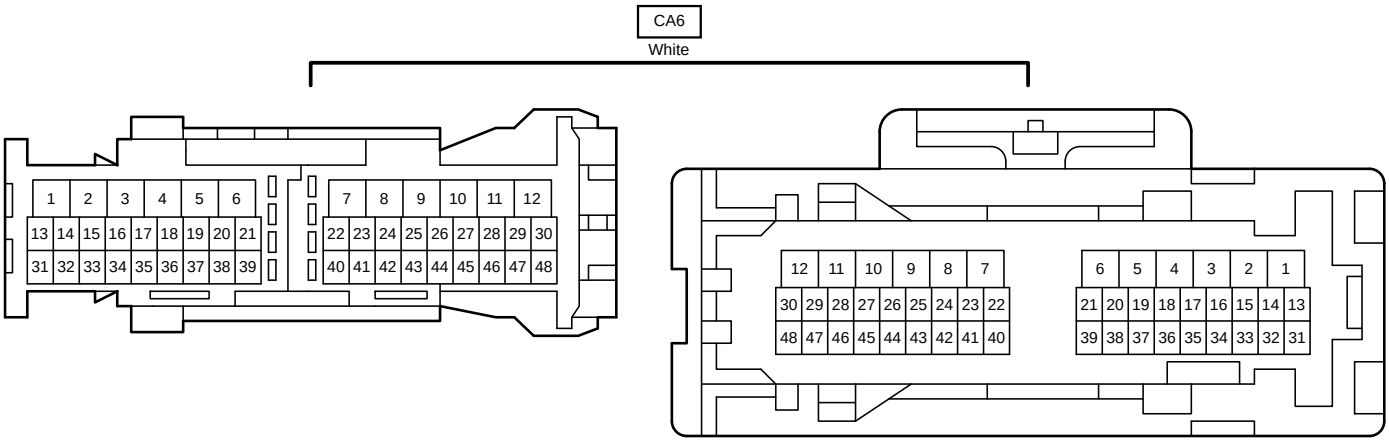
CA6
White
1 2 3 4 5 6 7 8 9 10 11 12
13 14 15 16 17 18 19 20 21 22 23 24 25 26 27 28 29 30
31 32 33 34 35 36 37 38 39 40 41 42 43 44 45 46 47 48
12 11 10 9 8 7 6 5 4 3 2 1
30 29 28 27 26 25 24 23 22 21 20 19 18 17 16 15 14 13
48 47 46 45 44 43 42 41 40 39 38 37 36 35 34 33 32 31