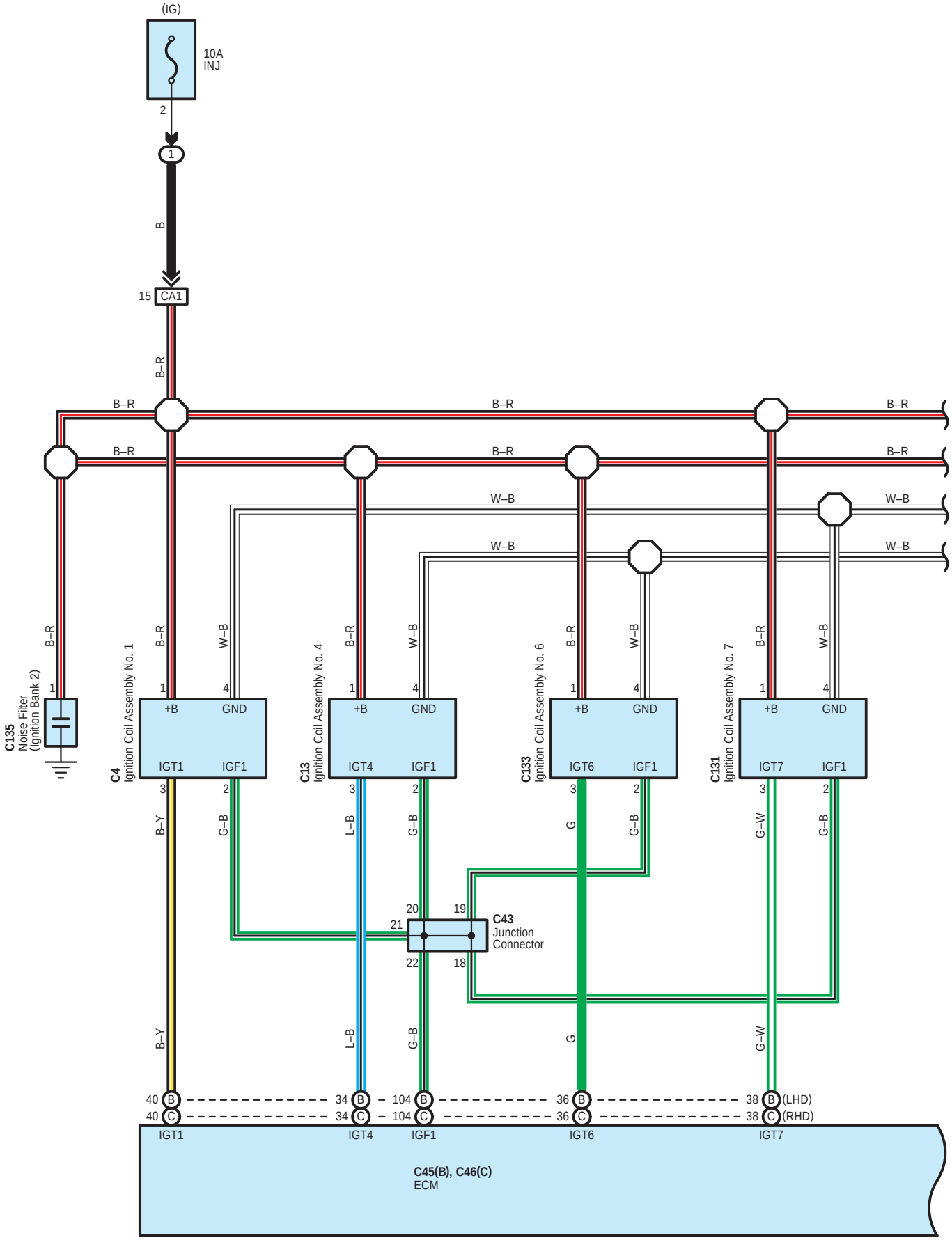
(IG)
10A
INJ
2
1
B
15
CA1
B–R
B–R
B–R
B–R
B–R
B–R
B–R
W–B
W–B
W–B
W–B
C135
Noise Filter
(Ignition Bank 2)
C4
Ignition Coil Assembly No. 1
C13
Ignition Coil Assembly No. 4
C133
Ignition Coil Assembly No. 6
C131
Ignition Coil Assembly No. 7
+B
GND
IGT1
IGF1
IGT4
IGF1
IGT6
IGF1
IGT7
IGF1
B–Y
G–B
L–B
G–B
G
G–B
G–W
G–B
C43
Junction
Connector
20
19
21
22
18
40
34
104
36
38
(LHD)
(RHD)
IGT1
IGT4
IGF1
IGT6
IGT7
C45(B), C46(C)
ECM

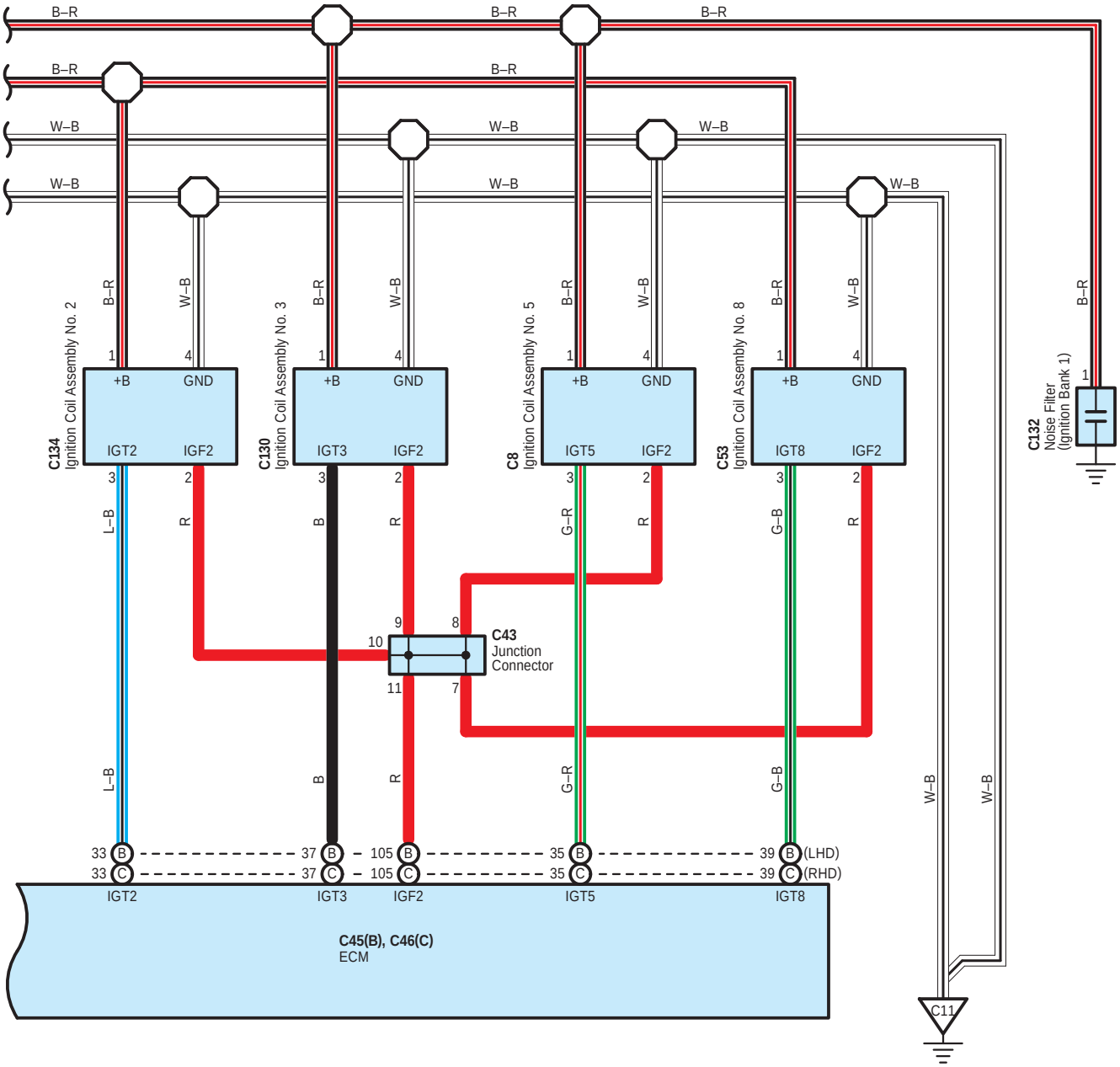
B–R
W–B
C134
Ignition Coil Assembly No. 2
C130
Ignition Coil Assembly No. 3
C8
Ignition Coil Assembly No. 5
C53
Ignition Coil Assembly No. 8
+B
GND
IGT2
IGF2
IGT3
IGT5
IGT8
L–B
R
B
G–R
G–B
C43
Junction Connector
C132
Noise Filter
(Ignition Bank 1)
33 B
33 C
37 B
37 C
105 B
105 C
35 B
35 C
39 B (LHD)
39 C (RHD)
C45(B), C46(C)
ECM
C11

C 4
Black

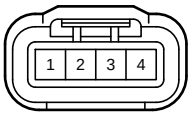

C 8
Black

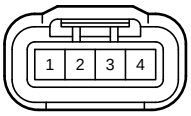

C 13
Black

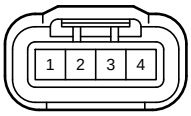

C 43
White

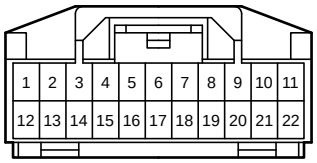

C 45
Black

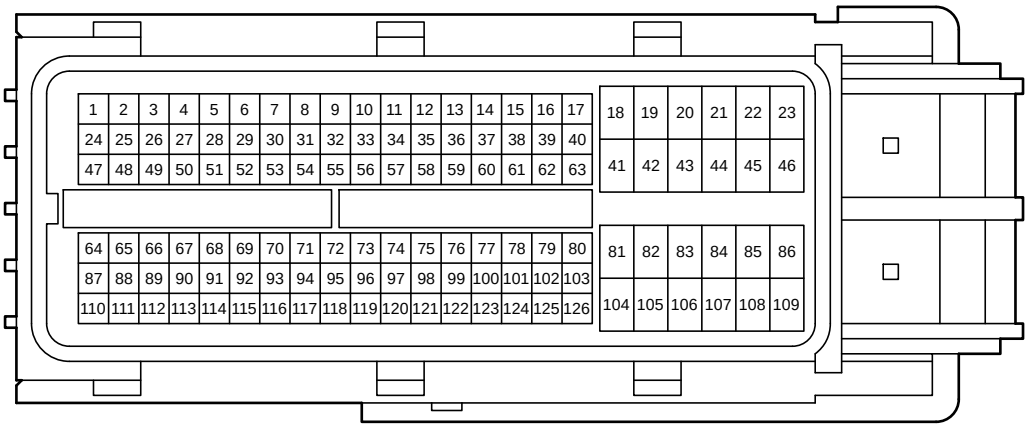

C 46
Black

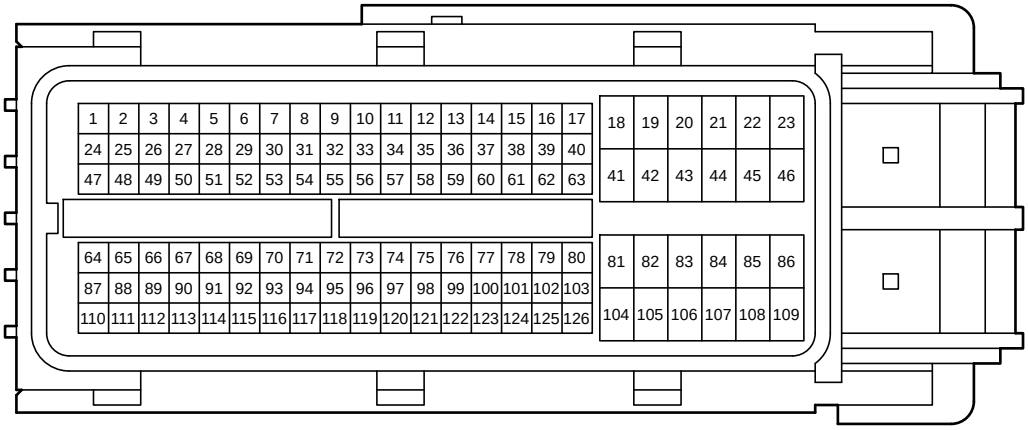

C 53
Black

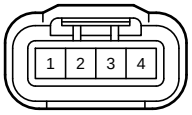

C130
Gray

C131
Gray

C132
Gray

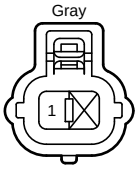

C133
Gray

C134
Gray

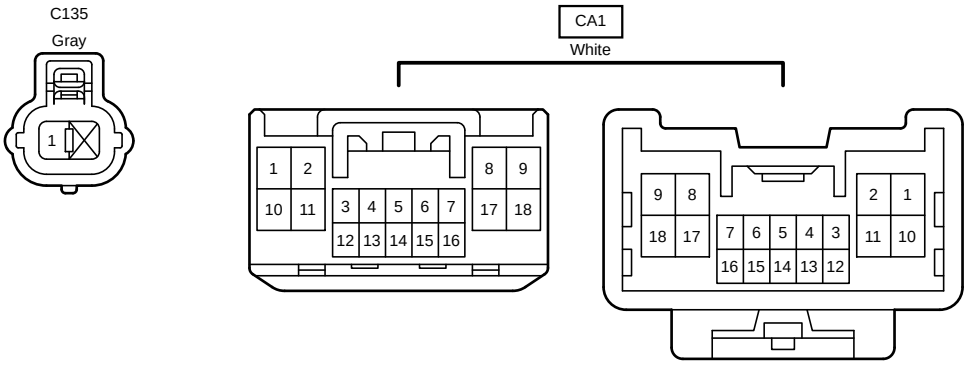
C135
Gray
1
CA1
White
1 2
10 11
3 4 5 6 7
12 13 14 15 16
8 9
17 18
9 8
18 17
7 6 5 4 3
16 15 14 13 12
2 1
11 10