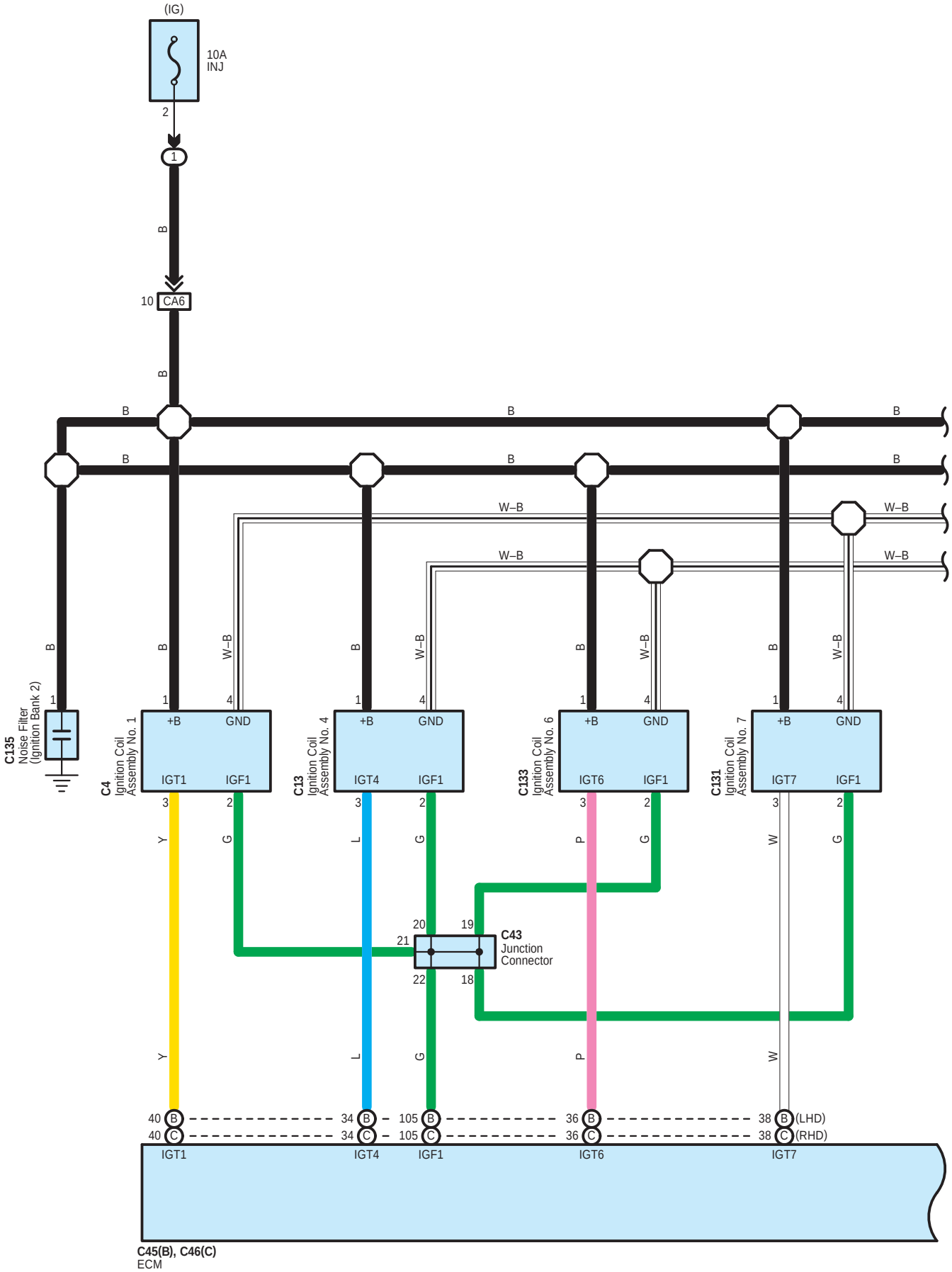
(IG)
10A
INJ
2
1
B
10 CA6
B
B
B
B
B
B
B
W–B
W–B
W–B
W–B
C135
Noise Filter
(Ignition Bank 2)
C4
Ignition Coil
Assembly No. 1
+B
GND
IGT1
IGF1
C13
Ignition Coil
Assembly No. 4
IGT4
IGF1
C133
Ignition Coil
Assembly No. 6
IGT6
IGF1
C131
Ignition Coil
Assembly No. 7
IGT7
IGF1
Y
G
L
G
P
G
W
G
C43
Junction
Connector
20
19
21
22
18
40 B
40 C
IGT1
34 B
34 C
IGT4
105 B
105 C
IGF1
36 B
36 C
IGT6
38 B (LHD)
38 C (RHD)
IGT7
C45(B), C46(C)
ECM

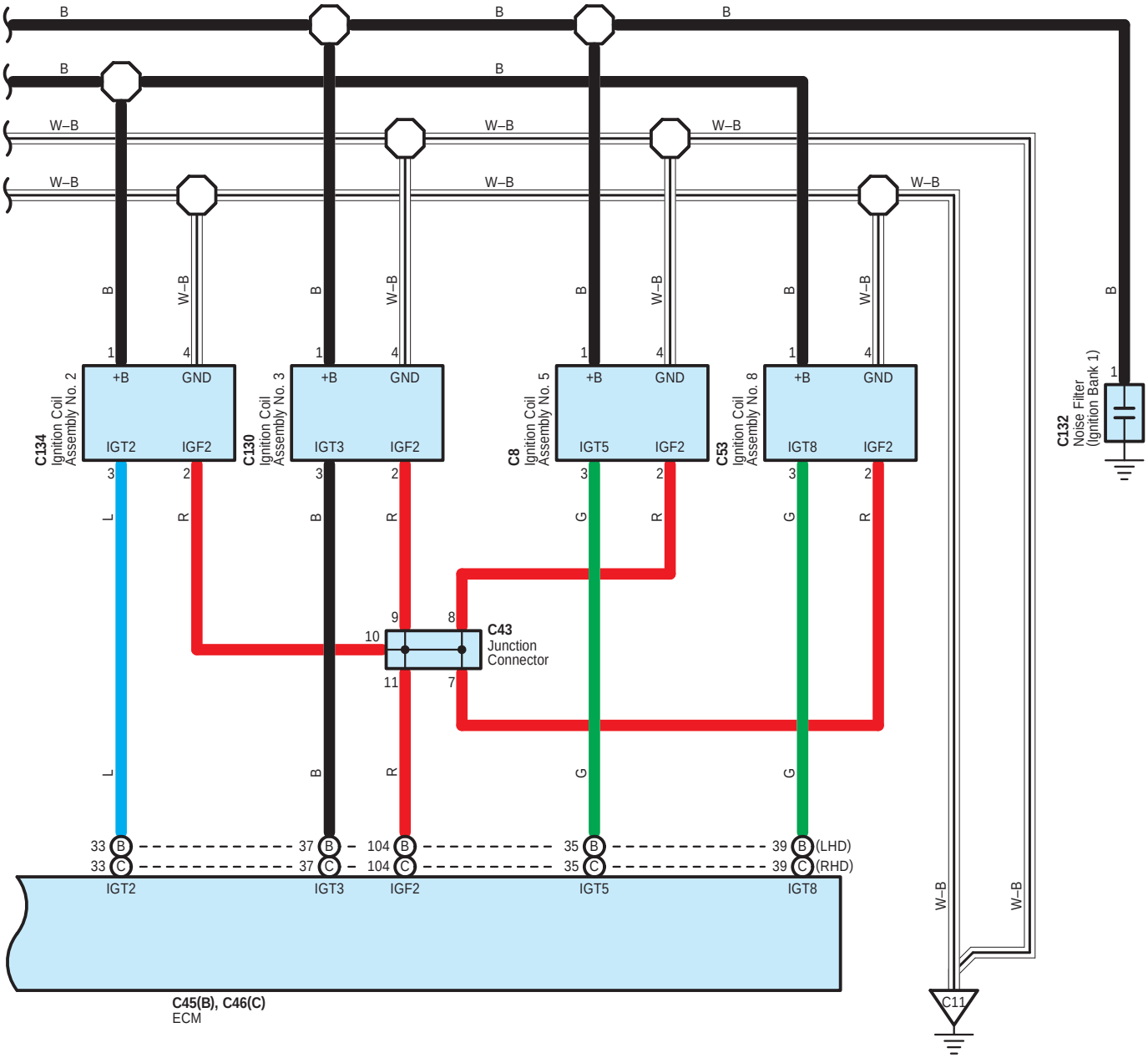
B
W–B
C134
Ignition Coil
Assembly No. 2
C130
Ignition Coil
Assembly No. 3
C8
Ignition Coil
Assembly No. 5
C53
Ignition Coil
Assembly No. 8
+B
GND
IGT2
IGF2
IGT3
IGT5
IGT8
C132
Noise Filter
(Ignition Bank 1)
C43
Junction
Connector
L
R
G
33 B
33 C
37 B
37 C
104 B
104 C
35 B
35 C
39 B (LHD)
39 C (RHD)
C45(B), C46(C)
ECM
C11

C 4
Black

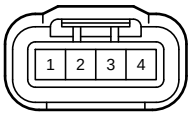

C 8
Black

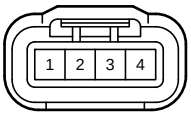

C 13
Black

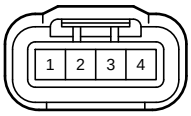

C 43
White

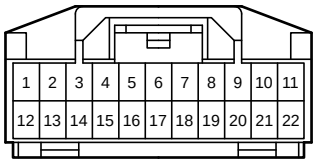

C 45
Black

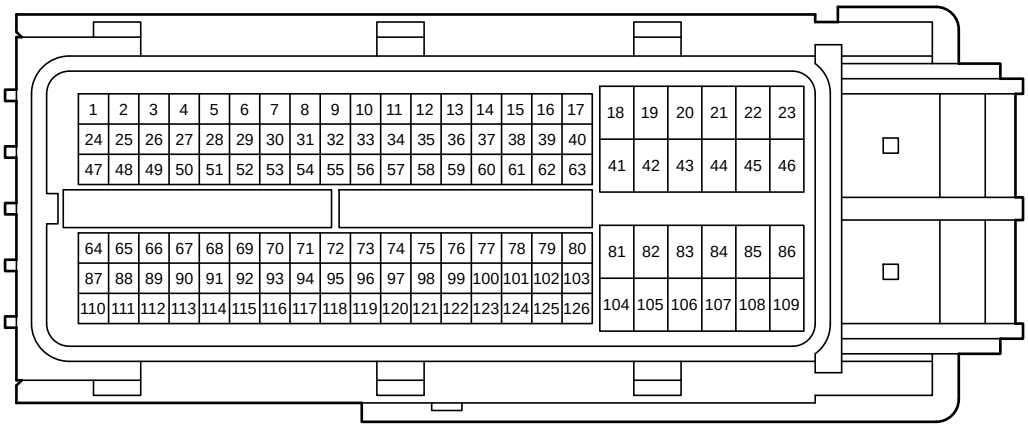

C 46
Black

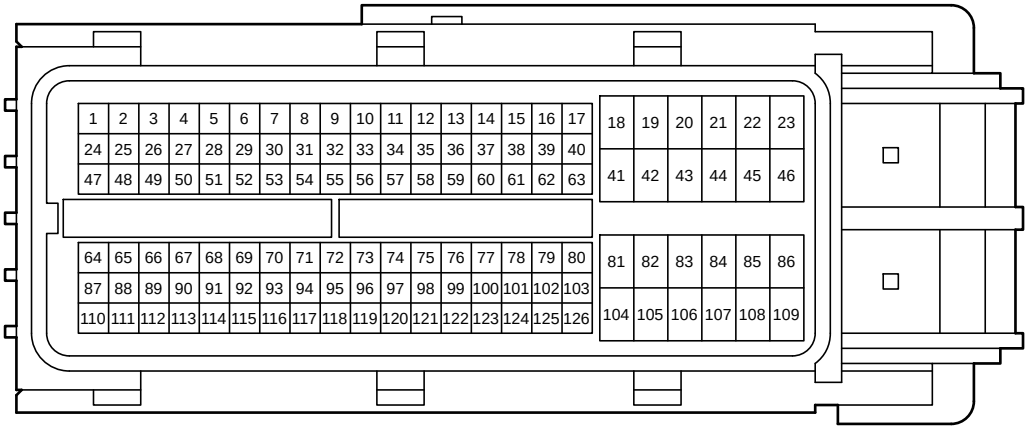

C 53
Black

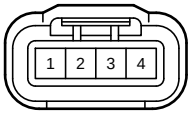

C130
Gray

C131
Gray

C132
Gray

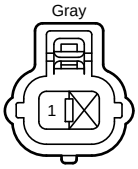

C133
Gray

C134
Gray

C135
Gray

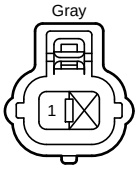

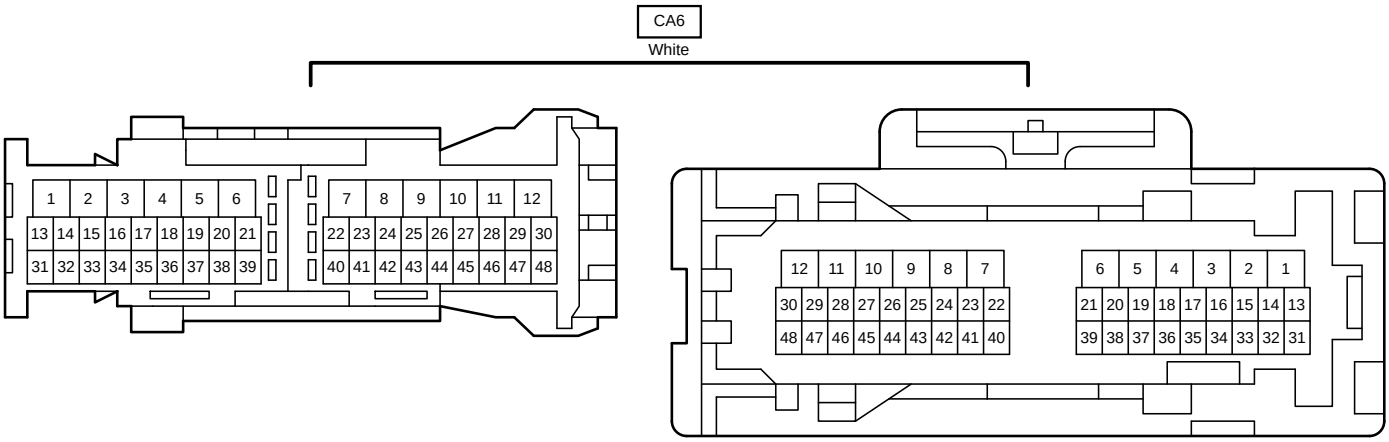
CA6
White
1 2 3 4 5 6 7 8 9 10 11 12
13 14 15 16 17 18 19 20 21 22 23 24 25 26 27 28 29 30
31 32 33 34 35 36 37 38 39 40 41 42 43 44 45 46 47 48
12 11 10 9 8 7 6 5 4 3 2 1
30 29 28 27 26 25 24 23 22 21 20 19 18 17 16 15 14 13
48 47 46 45 44 43 42 41 40 39 38 37 36 35 34 33 32 31