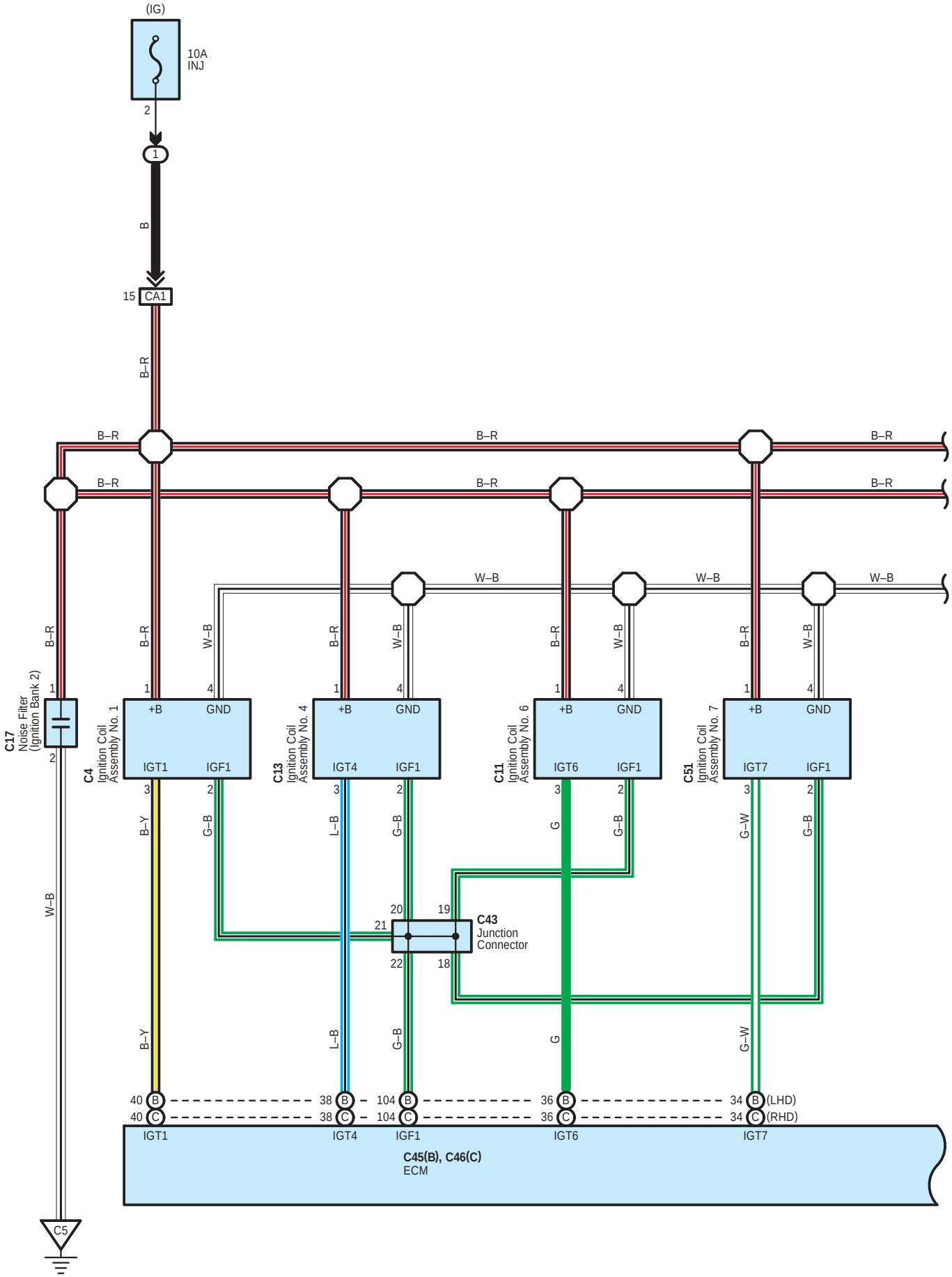
(IG)
10A
INJ
2
1
B
15
CA1
B–R
B–R
B–R
B–R
B–R
B–R
B–R
W–B
W–B
W–B
B–R
W–B
B–R
W–B
B–R
W–B
B–R
W–B
1
4
C17
Noise Filter
(Ignition Bank 2)
2
C4
Ignition Coil
Assembly No. 1
+B
GND
IGT1
IGF1
C13
Ignition Coil
Assembly No. 4
IGT4
C11
Ignition Coil
Assembly No. 6
IGT6
C51
Ignition Coil
Assembly No. 7
IGT7
3
2
B–Y
G–B
L–B
G
G–W
20
19
21
22
18
C43
Junction
Connector
40
38
104
36
34
(LHD)
(RHD)
C45(B), C46(C)
ECM
C5

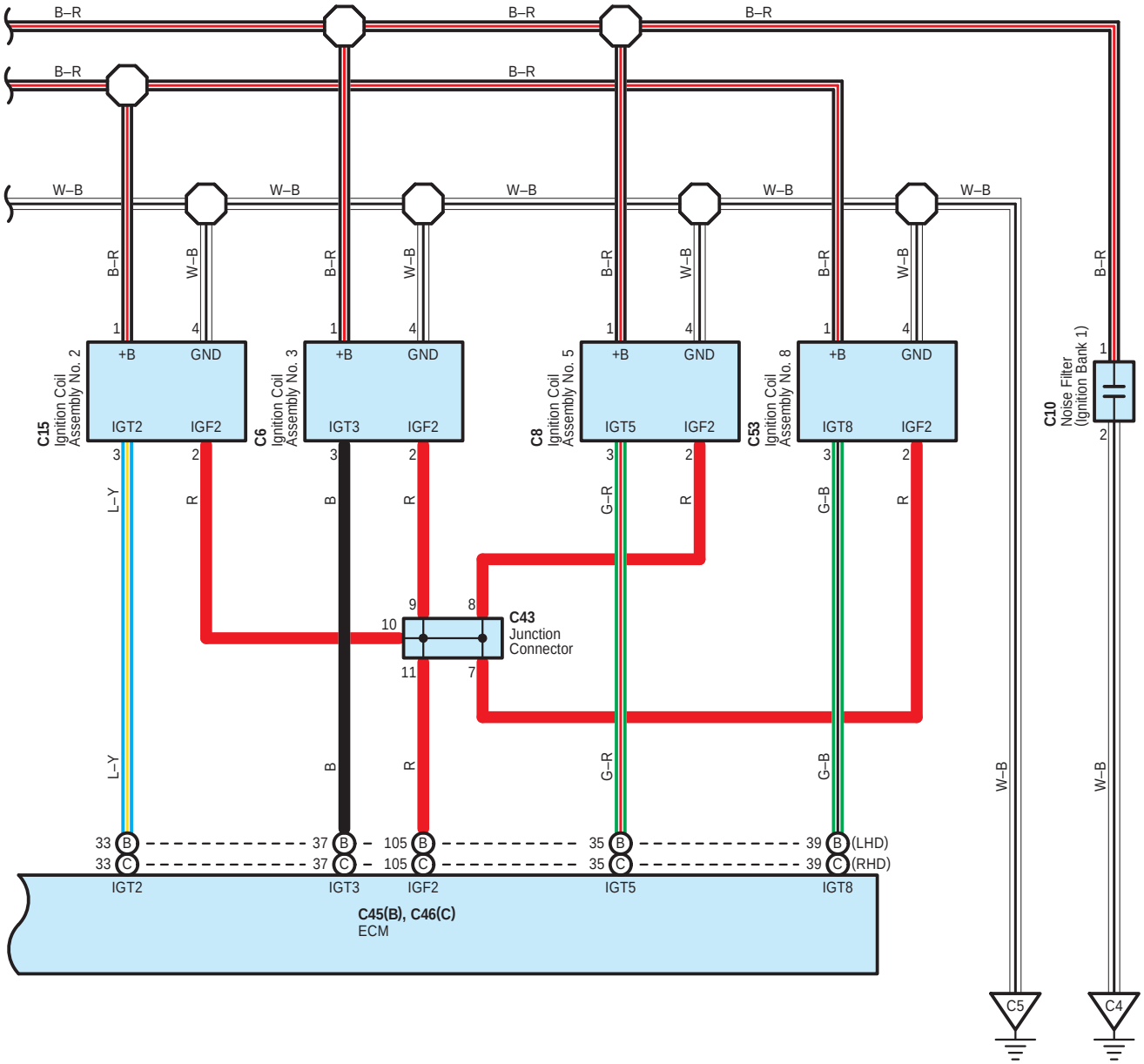
B–R
W–B
C15
Ignition Coil
Assembly No. 2
C6
Ignition Coil
Assembly No. 3
C8
Ignition Coil
Assembly No. 5
C53
Ignition Coil
Assembly No. 8
+B
GND
IGT2
IGF2
IGT3
IGT5
IGT8
C10
Noise Filter
(Ignition Bank 1)
L–Y
R
B
G–R
G–B
C43
Junction
Connector
33 B
33 C
37 B
37 C
105 B
105 C
35 B
35 C
39 B (LHD)
39 C (RHD)
C45(B), C46(C)
ECM
C5
C4

C 4
Black

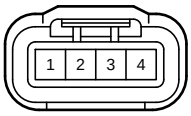

C 6
Black

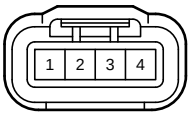

C 8
Black

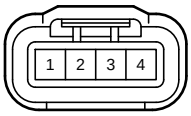

C 10
Gray

C 11
Black

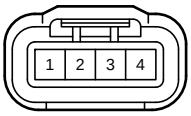

C 13
Black

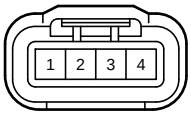

C 15
Black

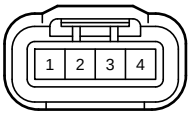

C 17
Gray

C 43
White

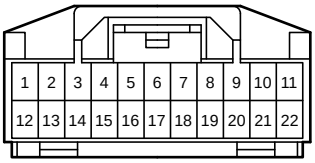

C 45
Black

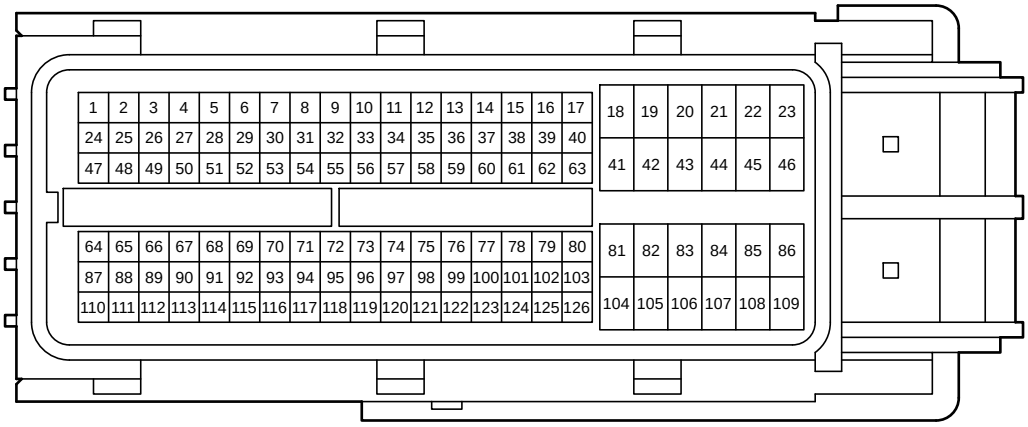

C 46
Black

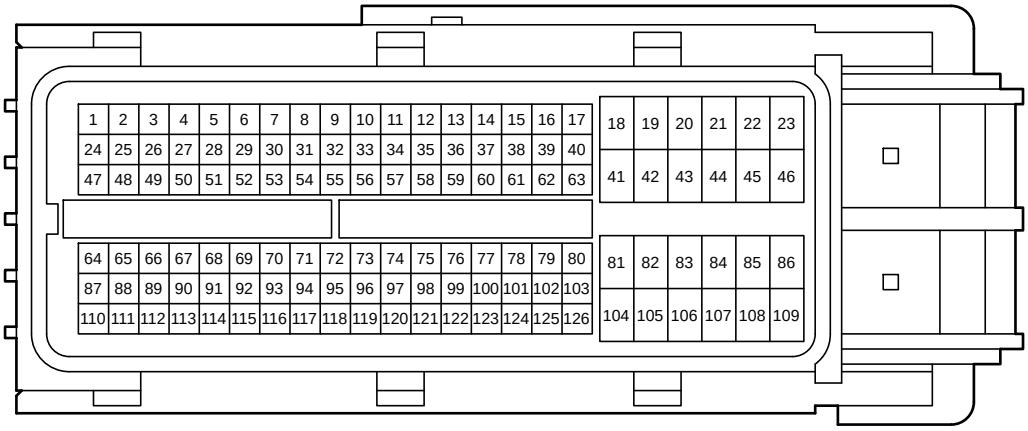

C 51
Black

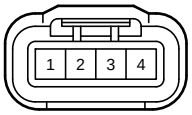

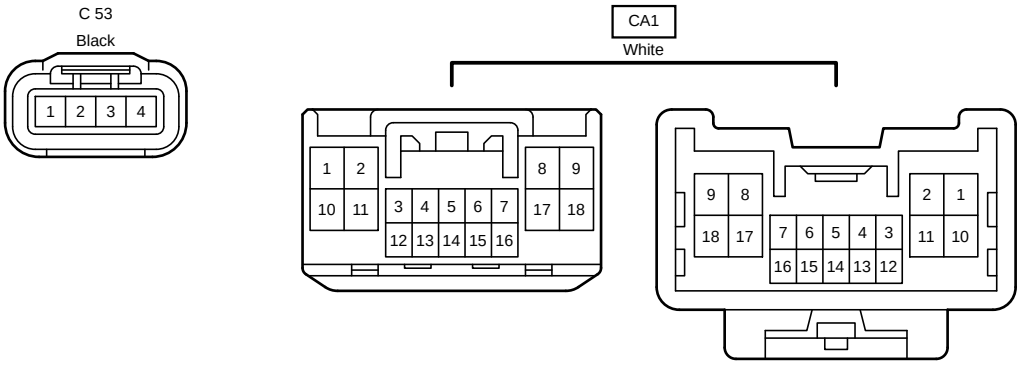
C 53
Black
1 2 3 4
CA1
White
1 2 10 11 3 4 5 6 7 12 13 14 15 16 8 9 17 18
9 8 18 17 7 6 5 4 3 16 15 14 13 12 2 1 11 10