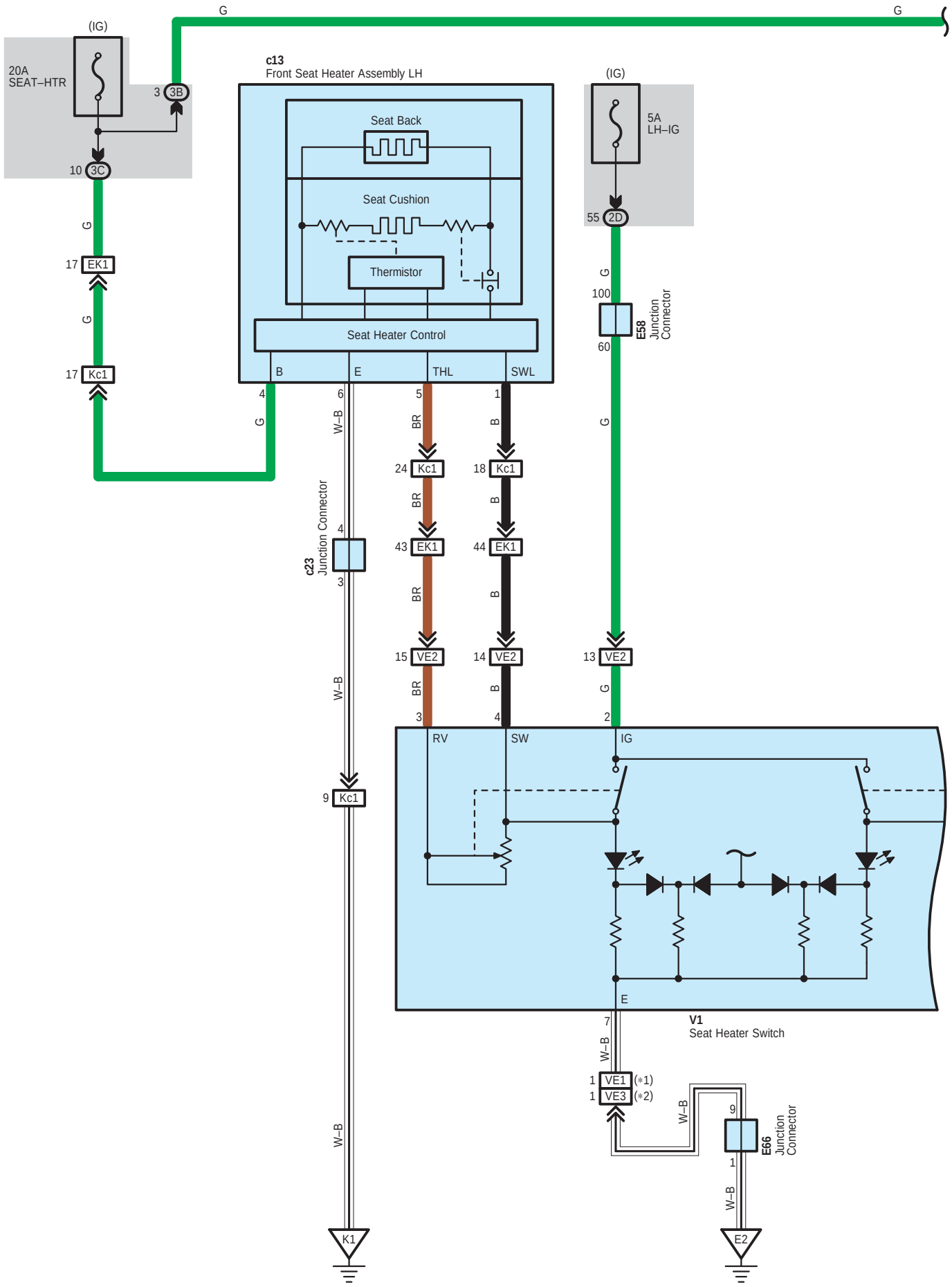
(IG)
20A
SEAT–HTR
3 3B
10 3C
G
17 EK1
17 Kc1
c13
Front Seat Heater Assembly LH
Seat Back
Seat Cushion
Thermistor
Seat Heater Control
B
E
THL
SWL
4
6
5
1
W–B
BR
B
24 Kc1
18 Kc1
43 EK1
44 EK1
15 VE2
14 VE2
13 VE2
3
4
2
RV
SW
IG
c23
Junction Connector
9 Kc1
K1
(IG)
5A
LH–IG
55 2D
100
60
E58
Junction
Connector
E
7
V1
Seat Heater Switch
1 VE1 (*1)
1 VE3 (*2)
9
1
E66
Junction
Connector
E2

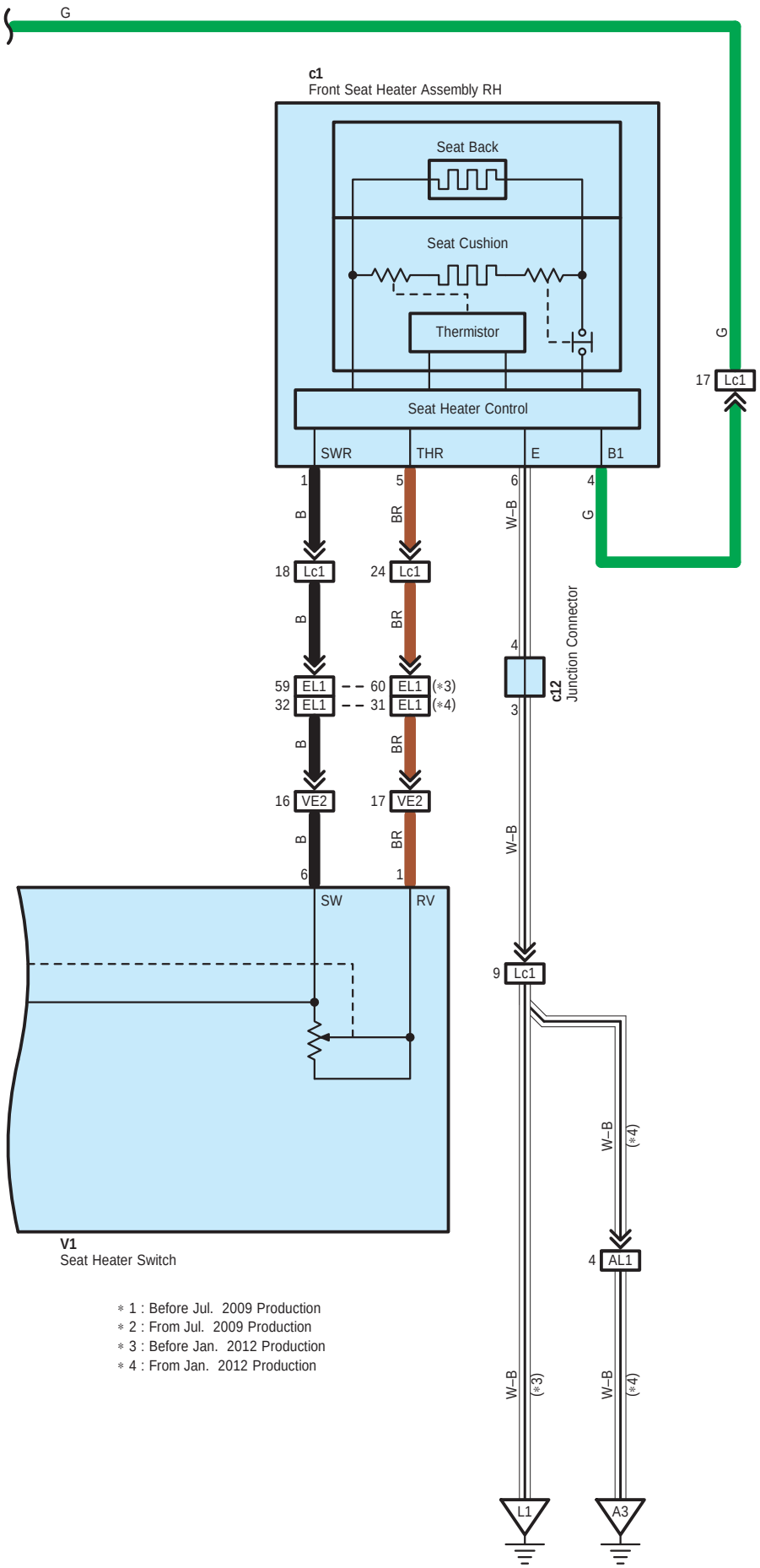
G
c1
Front Seat Heater Assembly RH
Seat Back
Seat Cushion
Thermistor
Seat Heater Control
SWR
THR
E
B1
17 Lc1
1
5
6
4
B
BR
W–B
G
18 Lc1
24 Lc1
4
c12
Junction Connector
3
59 EL1
32 EL1
60 EL1 (*3)
31 EL1 (*4)
16 VE2
17 VE2
6
1
SW
RV
9 Lc1
W–B (*4)
4 AL1
W–B (*3)
W–B (*4)
L1
A3
V1
Seat Heater Switch
* 1 : Before Jul. 2009 Production
* 2 : From Jul. 2009 Production
* 3 : Before Jan. 2012 Production
* 4 : From Jan. 2012 Production

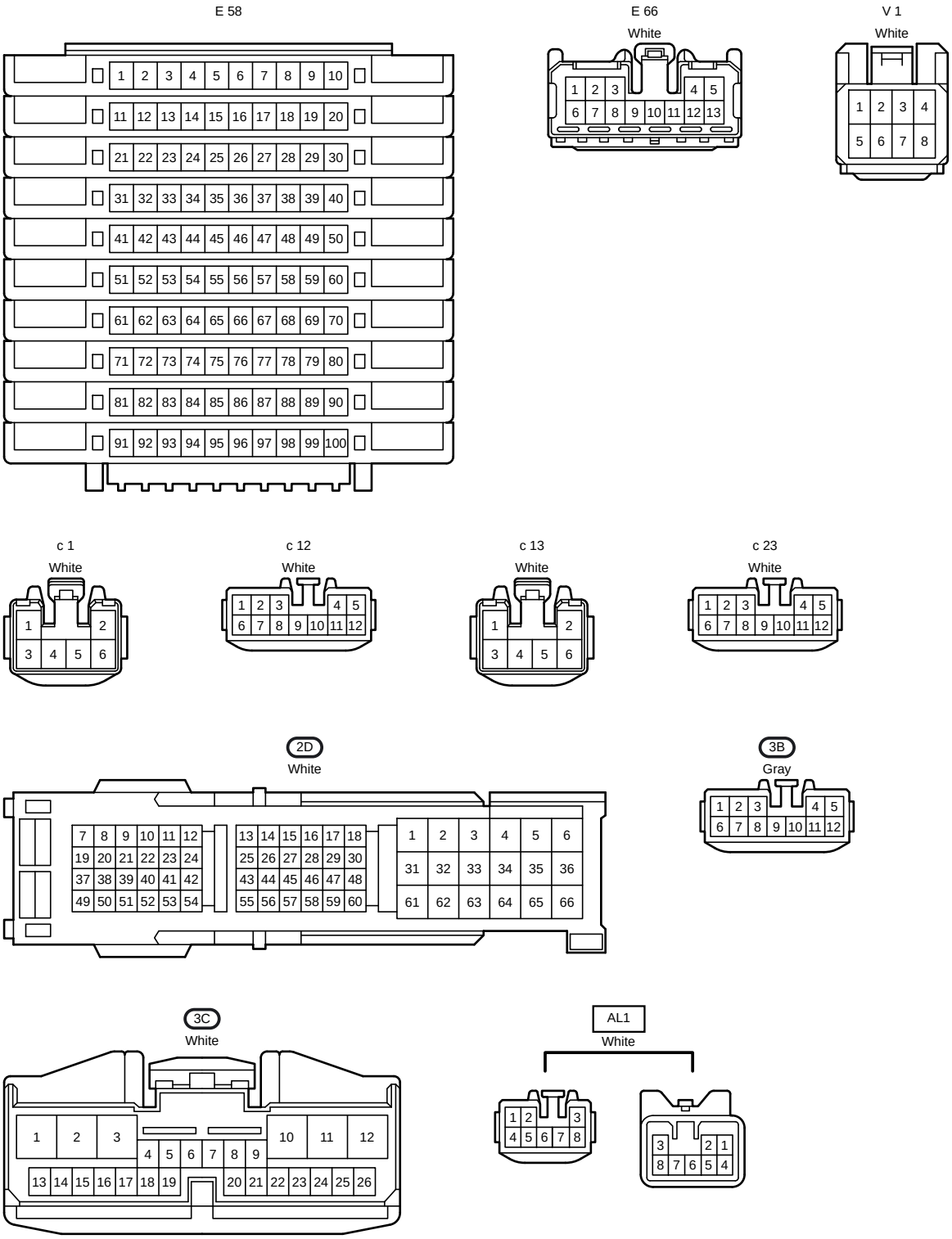
E 58
E 66
White
V 1
White
c 1
White
c 12
White
c 13
White
c 23
White
2D
White
3B
Gray
3C
White
AL1
White

Seat Heater <Front, Before Aug. 2015 Production>

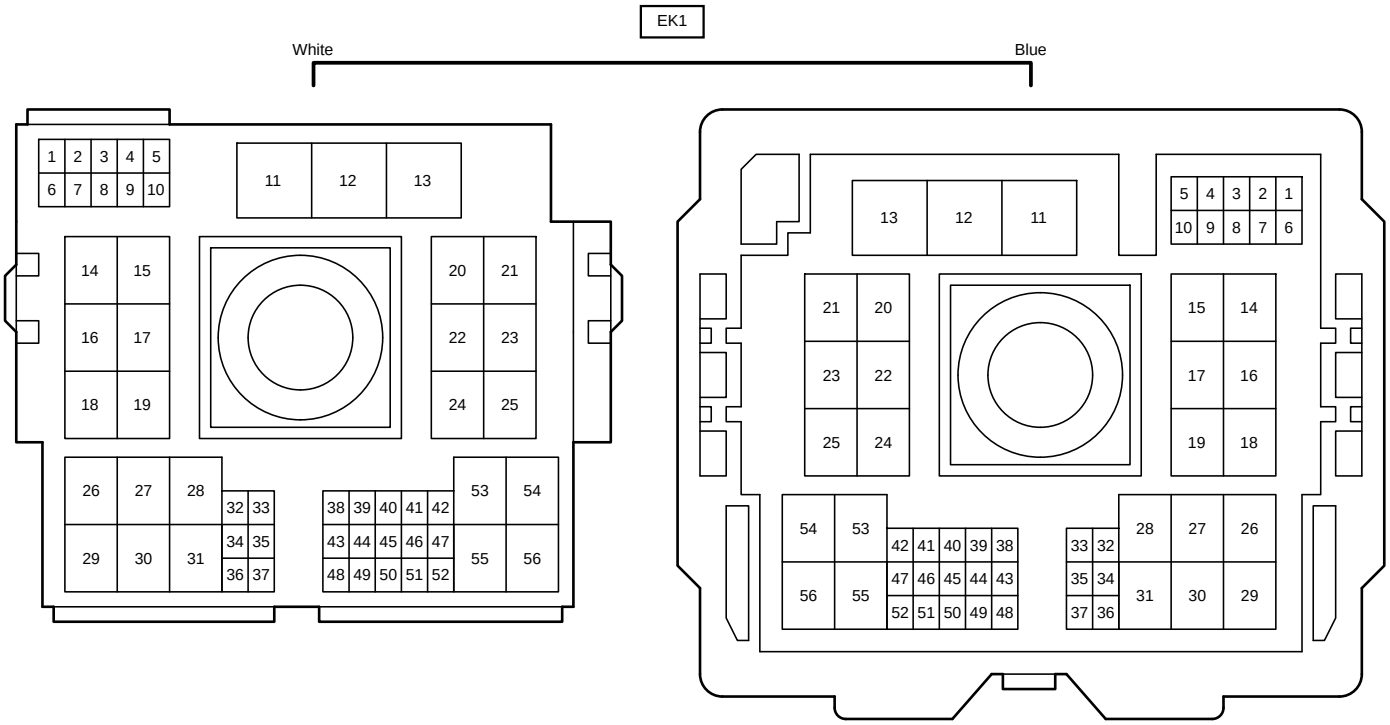

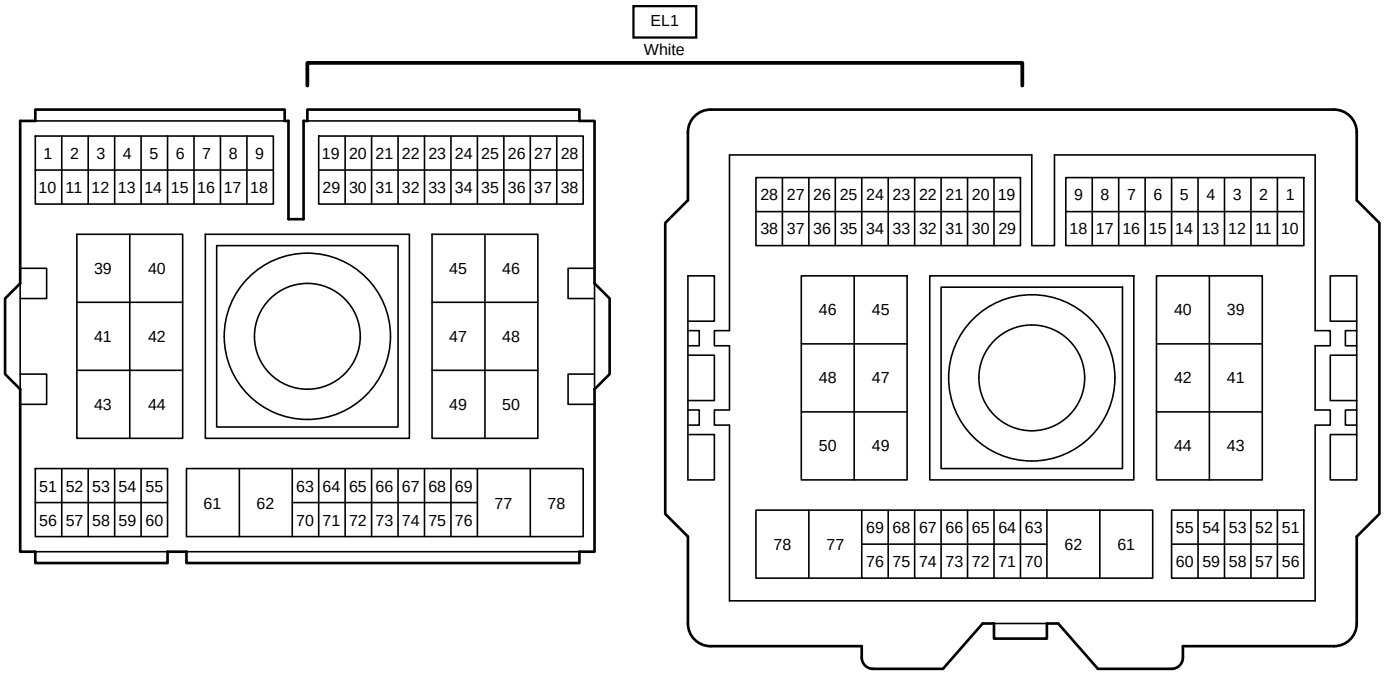

Kc1
White

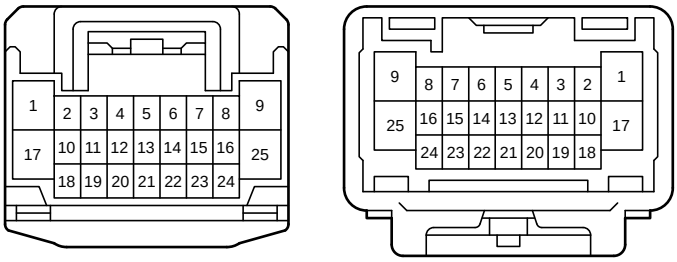

Lc1
White

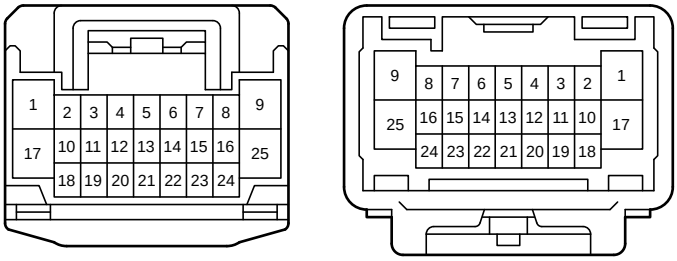

VE1
White

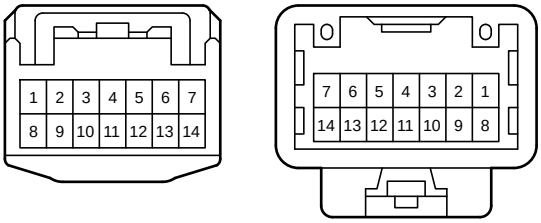

VE2
White

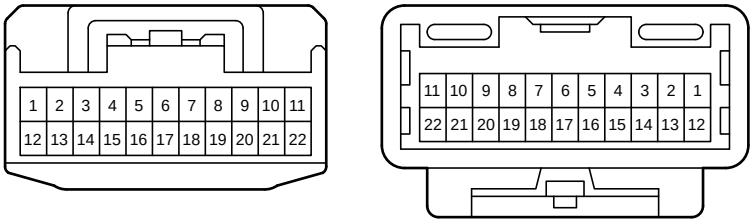
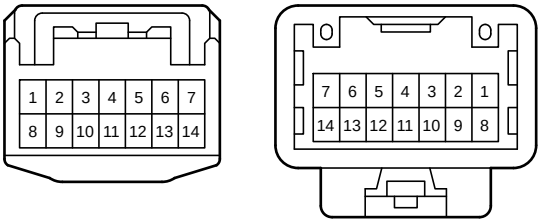
VE3
Gray