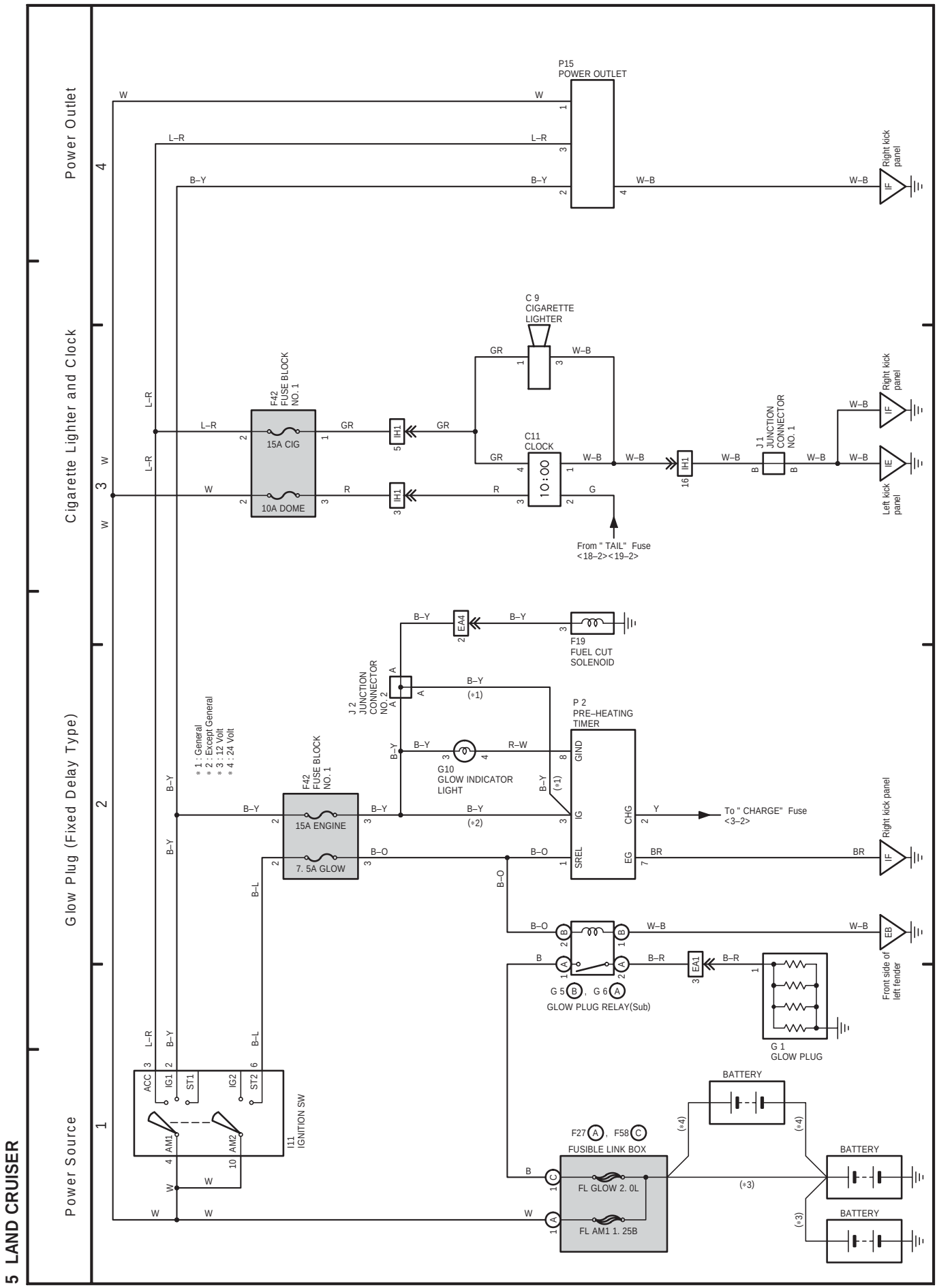
5 LAND CRUISER
Power Source
Glow Plug (Fixed Delay Type)
Cigarette Lighter and Clock
Power Outlet
P15
POWER OUTLET
Right kick panel
C 9
CIGARETTE
LIGHTER
C11
CLOCK
F42
FUSE BLOCK
NO. 1
15A CIG
10A DOME
IH1
J 1
JUNCTION
CONNECTOR
NO. 1
Left kick panel
From " TAIL" Fuse
<18–2><19–2>
EA4
F19
FUEL CUT
SOLENOID
J 2
JUNCTION
CONNECTOR
NO. 2
P 2
PRE–HEATING
TIMER
GIND
IG
SREL
CHG
EG
To " CHARGE" Fuse
<3–2>
15A ENGINE
7. 5A GLOW
G10
GLOW INDICATOR
LIGHT
Front side of
left fender
G 5 B , G 6 A
GLOW PLUG RELAY(Sub)
EA1
G 1
GLOW PLUG
I11
IGNITION SW
ACC
IG1
ST1
IG2
ST2
AM1
AM2
BATTERY
F27 A , F58 C
FUSIBLE LINK BOX
FL GLOW 2. 0L
FL AM1 1. 25B
EB
IE
IF
* 1 : General
* 2 : Except General
* 3 : 12 Volt
* 4 : 24 Volt