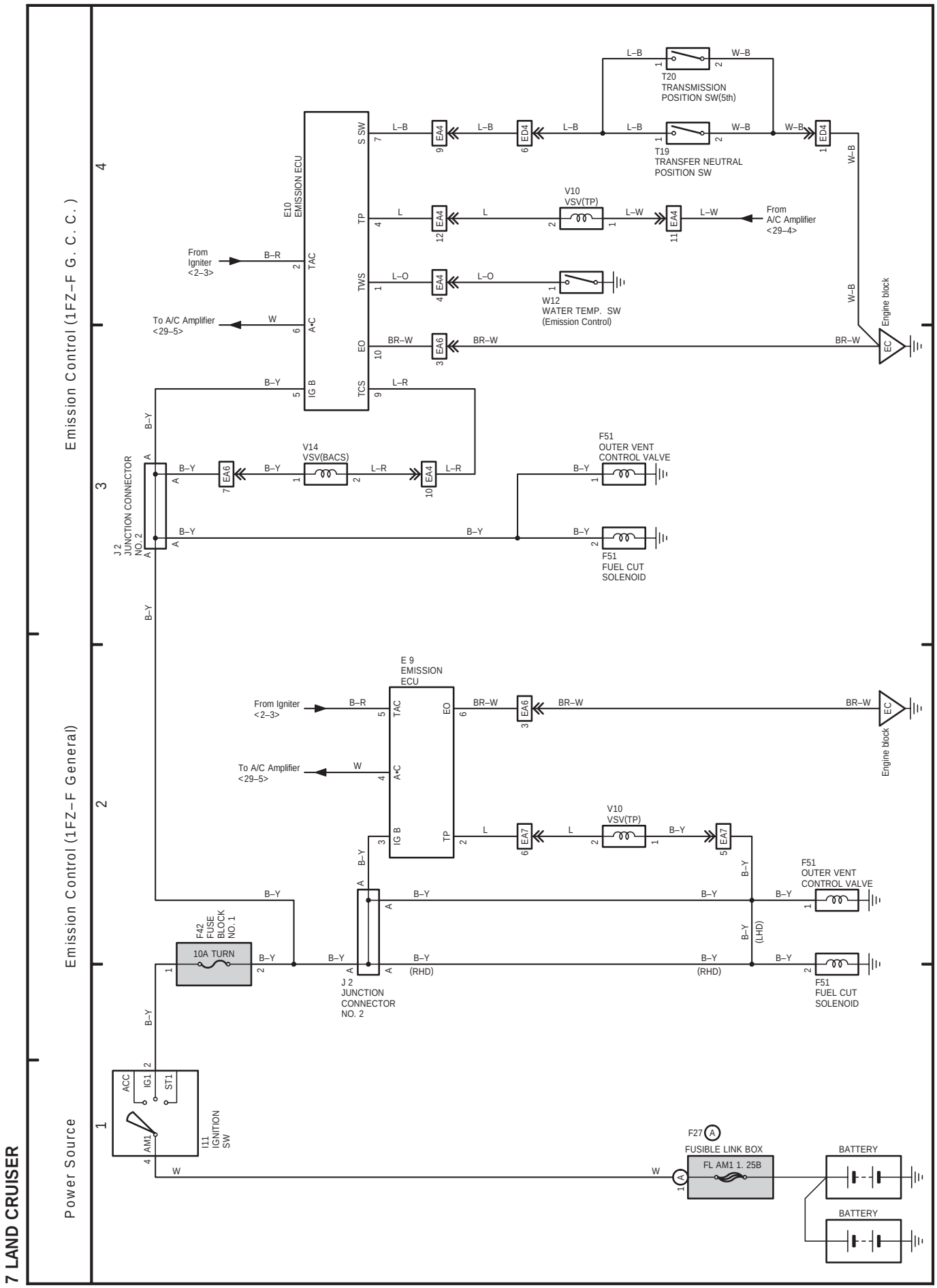

7 LAND CRUISER