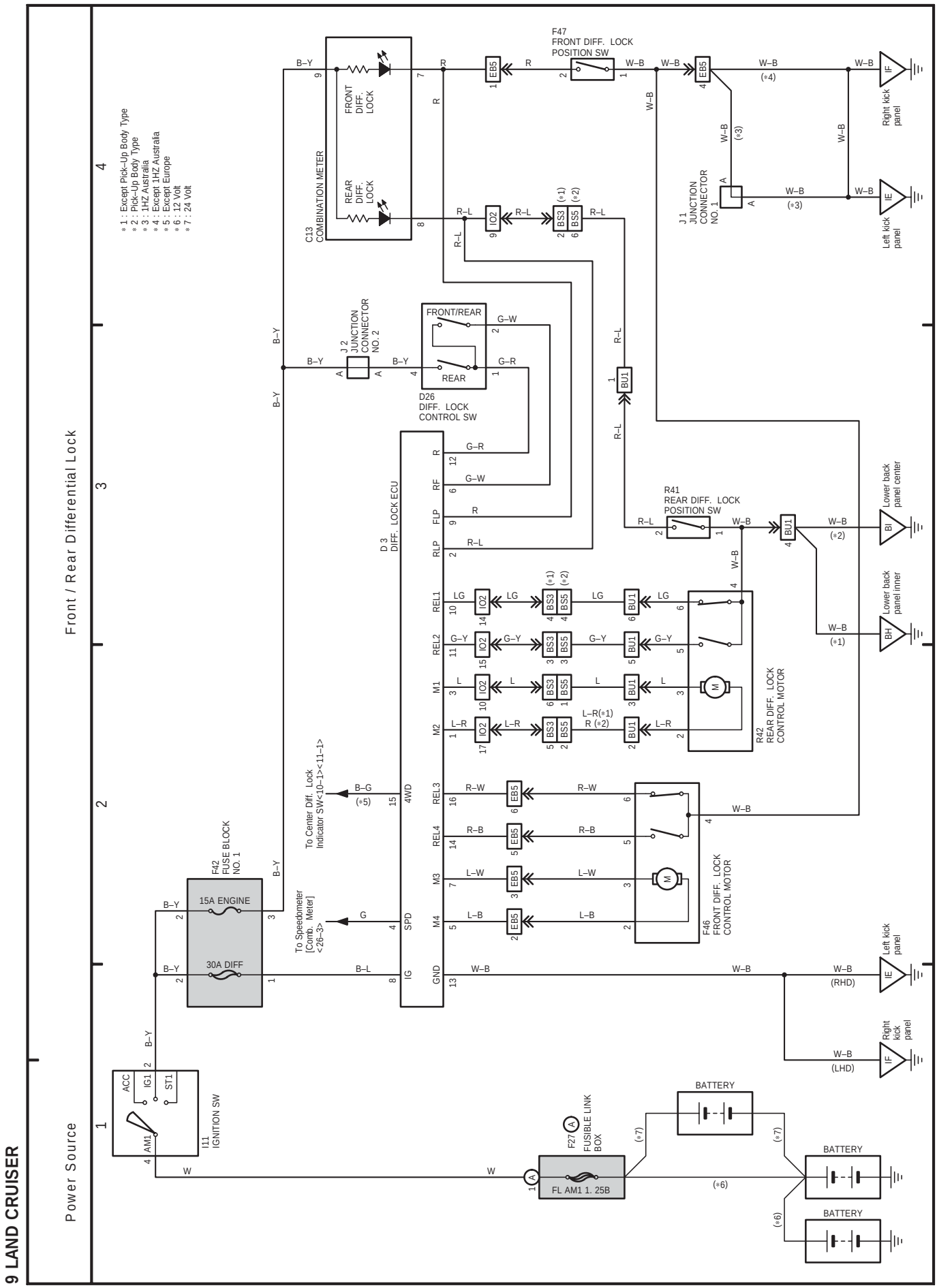
9 LAND CRUISER
Power Source
Front / Rear Differential Lock
* 1 : Except Pick–Up Body Type
* 2 : Pick–Up Body Type
* 3 : 1HZ Australia
* 4 : Except 1HZ Australia
* 5 : Except Europe
* 6 : 12 Volt
* 7 : 24 Volt
C13 COMBINATION METER
FRONT DIFF. LOCK
REAR DIFF. LOCK
F47 FRONT DIFF. LOCK POSITION SW
J 1 JUNCTION CONNECTOR NO. 1
J 2 JUNCTION CONNECTOR NO. 2
D26 DIFF. LOCK CONTROL SW
FRONT/REAR
REAR
D 3 DIFF. LOCK ECU
R41 REAR DIFF. LOCK POSITION SW
R42 REAR DIFF. LOCK CONTROL MOTOR
F46 FRONT DIFF. LOCK CONTROL MOTOR
F42 FUSE BLOCK NO. 1
15A ENGINE
30A DIFF
I11 IGNITION SW
ACC
IG1
ST1
AM1
F27 FUSIBLE LINK BOX
FL AM1 1. 25B
BATTERY
To Center Diff. Lock Indicator SW<10–1><11–1>
To Speedometer [Comb. Meter]
Right kick panel
Left kick panel
Lower back panel center
Lower back panel inner
(RHD)
(LHD)