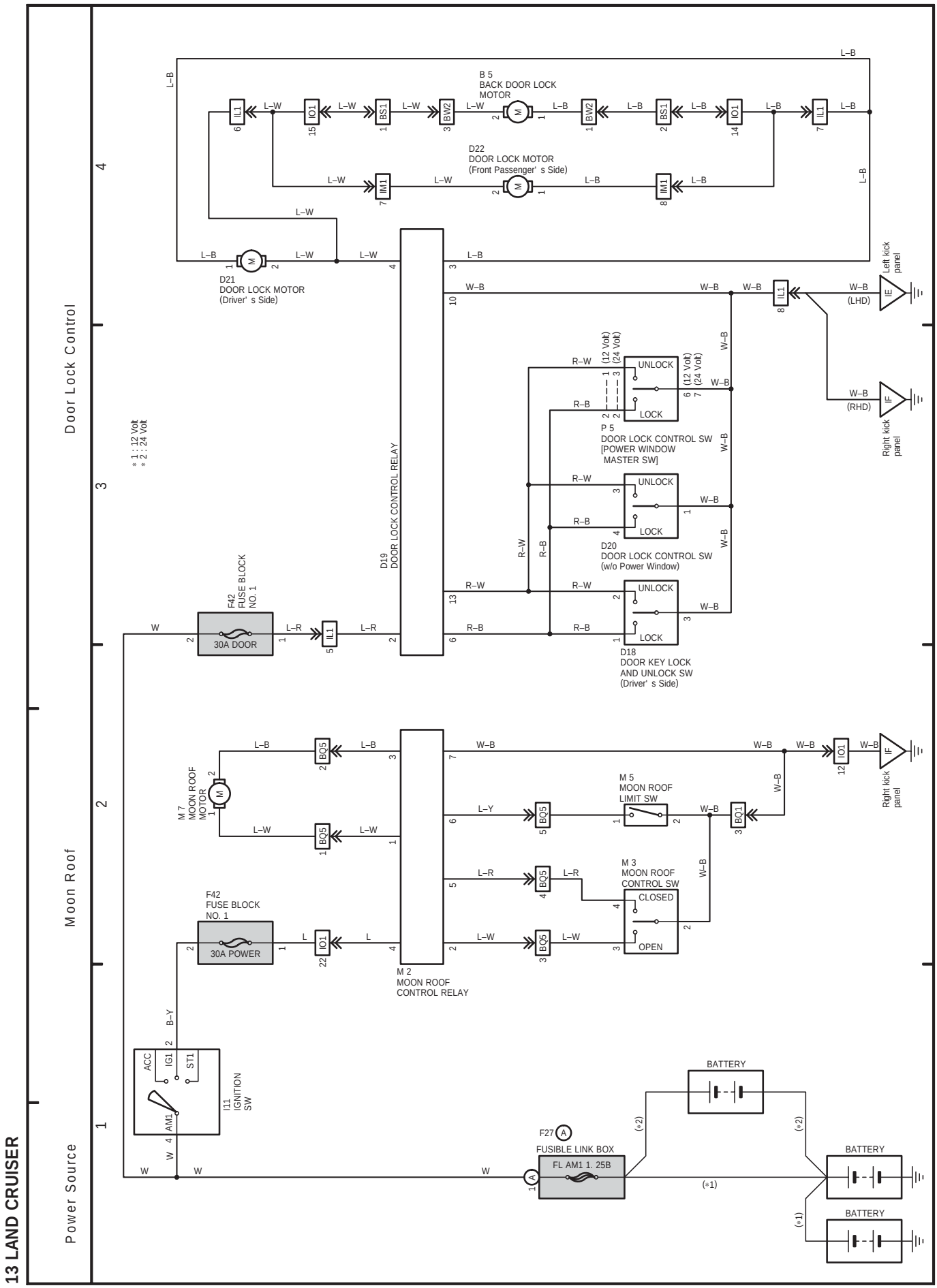
13 LAND CRUISER
Power Source
Moon Roof
Door Lock Control
B 5
BACK DOOR LOCK
MOTOR
D22
DOOR LOCK MOTOR
(Front Passenger' s Side)
D21
DOOR LOCK MOTOR
(Driver' s Side)
D19
DOOR LOCK CONTROL RELAY
P 5
DOOR LOCK CONTROL SW
[POWER WINDOW
MASTER SW]
D20
DOOR LOCK CONTROL SW
(w/o Power Window)
D18
DOOR KEY LOCK
AND UNLOCK SW
(Driver' s Side)
F42
FUSE BLOCK
NO. 1
30A DOOR
30A POWER
M 7
MOON ROOF
MOTOR
M 5
MOON ROOF
LIMIT SW
M 3
MOON ROOF
CONTROL SW
M 2
MOON ROOF
CONTROL RELAY
I11
IGNITION
SW
F27
FUSIBLE LINK BOX
FL AM1 1, 25B
BATTERY
Left kick
panel
Right kick
panel
UNLOCK
LOCK
CLOSED
OPEN
ACC
IG1
ST1
AM1
(12 Volt)
(24 Volt)
(LHD)
(RHD)
* 1 : 12 Volt
* 2 : 24 Volt
(*1)
(*2)