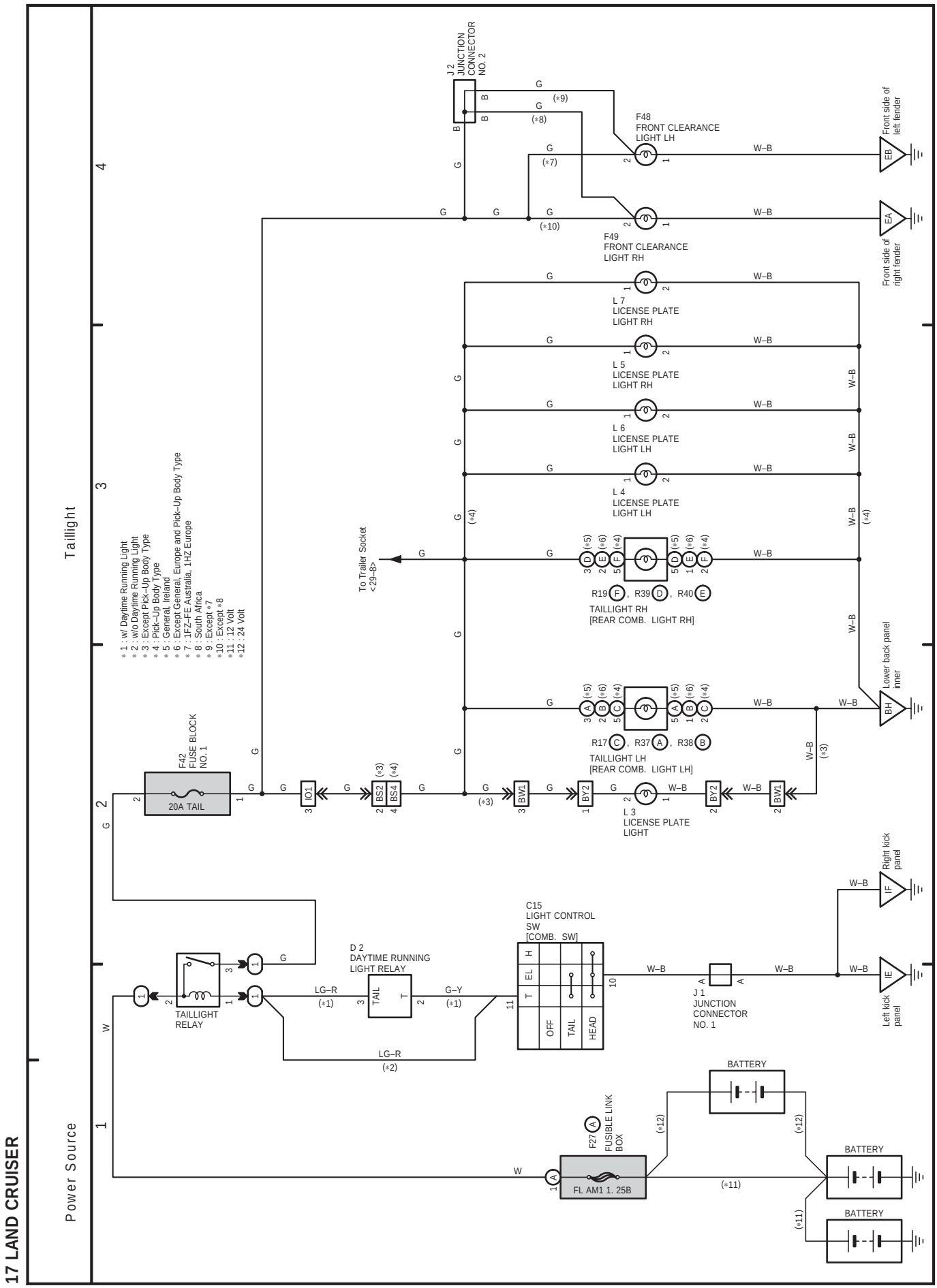
17 LAND CRUISER
Power Source
Taillight
1
2
3
4
J 2
JUNCTION
CONNECTOR
NO. 2
F48
FRONT CLEARANCE
LIGHT LH
F49
FRONT CLEARANCE
LIGHT RH
Front side of
left fender
Front side of
right fender
EB
EA
L 7
LICENSE PLATE
LIGHT RH
L 5
LICENSE PLATE
LIGHT RH
L 6
LICENSE PLATE
LIGHT LH
L 4
LICENSE PLATE
LIGHT LH
To Trailer Socket
<29–8>
R19 F , R39 D , R40 E
TAILLIGHT RH
[REAR COMB. LIGHT RH]
R17 C , R37 A , R38 B
TAILLIGHT LH
[REAR COMB. LIGHT LH]
Lower back panel
inner
BH
L 3
LICENSE PLATE
LIGHT
F42
FUSE BLOCK
NO. 1
20A TAIL
IO1
BS2
BS4
BW1
BY2
BY2
BW1
TAILLIGHT
RELAY
D 2
DAYTIME RUNNING
LIGHT RELAY
TAIL
C15
LIGHT CONTROL
SW
[COMB. SW]
H
EL
T
OFF
TAIL
HEAD
J 1
JUNCTION
CONNECTOR
NO. 1
Right kick
panel
Left kick
panel
IF
IE
F27
FUSIBLE LINK
BOX
FL AM1 1. 25B
BATTERY
BATTERY
BATTERY
* 1 : w/ Daytime Running Light
* 2 : w/o Daytime Running Light
* 3 : Except Pick–Up Body Type
* 4 : Pick–Up Body Type
* 5 : General, Ireland
* 6 : Except General, Europe and Pick–Up Body Type
* 7 : 1FZ–FE Australia, 1HZ Europe
* 8 : South Africa
* 9 : Except * 7
*10 : Except * 8
*11 : 12 Volt
*12 : 24 Volt